UCRL 2685
UNCLASSIFIED

UNIVERSITY OF CALIFORNIA

Radiation Laboratory

TWO-WEEK LOAN COPY

This is a Library Circulating Copy which may be borrowed for two weeks. For a personal retention copy, call Tech. Info. Division, Ext. 5545

BERKELEY, CALIFORNIA

DISCLAIMER

This document was prepared as an account of work sponsored by the United States Government. While this document is believed to contain correct information, neither the United States Government nor any agency thereof, nor the Regents of the University of California, nor any of their employees, makes any warranty, express or implied, or assumes any legal responsibility for the accuracy, completeness, or usefulness of any information, apparatus, product, or process disclosed, or represents that its use would not infringe privately owned rights. Reference herein to any specific commercial product, process, or service by its trade name, trademark, manufacturer, or otherwise, does not necessarily constitute or imply its endorsement, recommendation, or favoring by the United States Government or any agency thereof, or the Regents of the University of California. The views and opinions of authors expressed herein do not necessarily state or reflect those of the United States Government or any agency thereof or the Regents of the University of California.

UCRL-2685
Unclassified Physics

UNIVERSITY OF CALIFORNIA
Radiation Laboratory

Contract No. W-7405-eng-48

CROSS SECTIONS FOR PRODUCING HIGH-ENERGY NEUTRONS FROM CARBON TARGETS BOMBARDED BY PROTONS, DEUTERONS, AND He^3 PARTICLES

Larry Schecter, Walter E. Crandall, George P. Millburn
and John Ise, Jr.

September 2, 1954

Berkeley, California

CROSS SECTIONS FOR PRODUCING HIGH-ENERGY NEUTRONS FROM CARBON TARGETS BOMBARDED BY PROTONS, DEUTERONS, AND He^3 PARTICLES

Larry Schecter, Walter E. Crandall, George P. Millburn, and John Ise, Jr.

Radiation Laboratory, Department of Physics
University of California, Berkeley, California

September 2, 1954

ABSTRACT

The differential cross sections, $d\sigma/d\Omega$, for producing neutrons with energy in excess of 20 Mev from carbon targets bombarded by 340-Mev protons, 190-Mev deuterons, and 490-Mev He^3 particles were measured. The absolute cross sections were determined by counting identical carbon targets and neutron detector foils in equivalent geometry and utilizing the known ratios of excitation functions for the neutron and bombarding particles.

CROSS SECTIONS FOR PRODUCING HIGH-ENERGY NEUTRONS FROM CARBON TARGETS BOMBARDED BY PROTONS, DEUTERONS, AND He^3 PARTICLES

Larry Schecter, Walter E. Crandall, George P. Millburn, and John Ise, Jr.

Radiation Laboratory, Department of Physics
University of California, Berkeley, California

September 2, 1954

INTRODUCTION

High-energy neutron beams have been produced at Berkeley in a variety of ways: 90-Mev neutrons result from stripping 190-Mev deuterons;[1, 2] 270-Mev neutrons result from exchange collisions of 340-Mev protons inside light nuclei;[3] 160-Mev neutrons result from stripping 490-Mev He^3 ions.[4] This report concerns the measurement of the differential cross sections for each of these processes.

EXPERIMENTAL METHOD

Angular Distribution

Each of the ions mentioned above was accelerated to full energy in the 184-inch cyclotron (Fig. 1) and struck a laminated 3/8-inch carbon target of truncated wedge shape (Fig. 2) placed on a probe, producing high-energy neutrons over a range of angles. In order to measure the angular distribution of these neutrons, pure graphite detector foils, 1-11/16 inches in diameter and 1/8 inch thick, were placed every few degrees around the cyclotron over a horizontal range of 25° and a vertical range of 12°. No monitor was needed, as all detector foils received exactly the same exposure time, about one-half hour. The detector foils were placed directly on the tank wall, so that the effects of wall scattering were minimized. As the neutron activation threshold in carbon is about 20 Mev,[5] neutrons degraded below this energy by inelastic collisions with the dees, walls, and shielding are not detected.

Following bombardment, the activity in each of the foils was measured under an end-window Geiger counter in a lead shield. After the usual

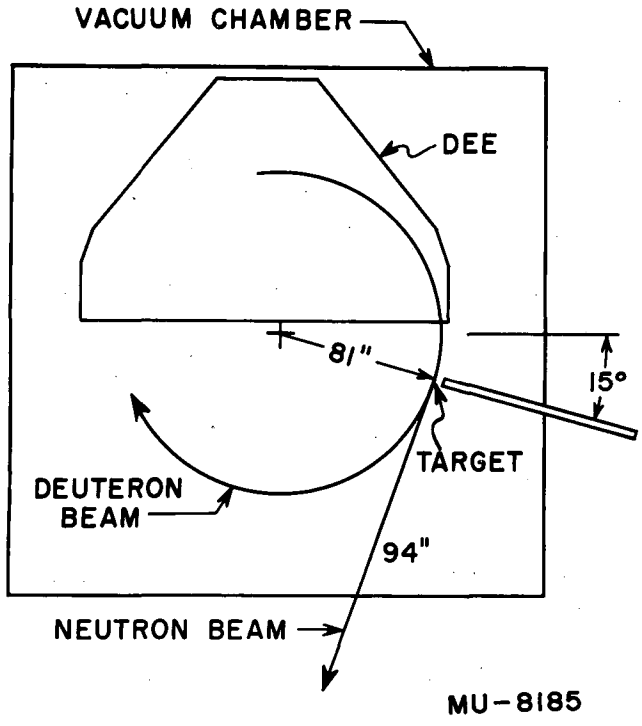

Fig. 1 Experimental arrangement. The carbon detector foils were placed on the outer surface of the vacuum chamber wall.

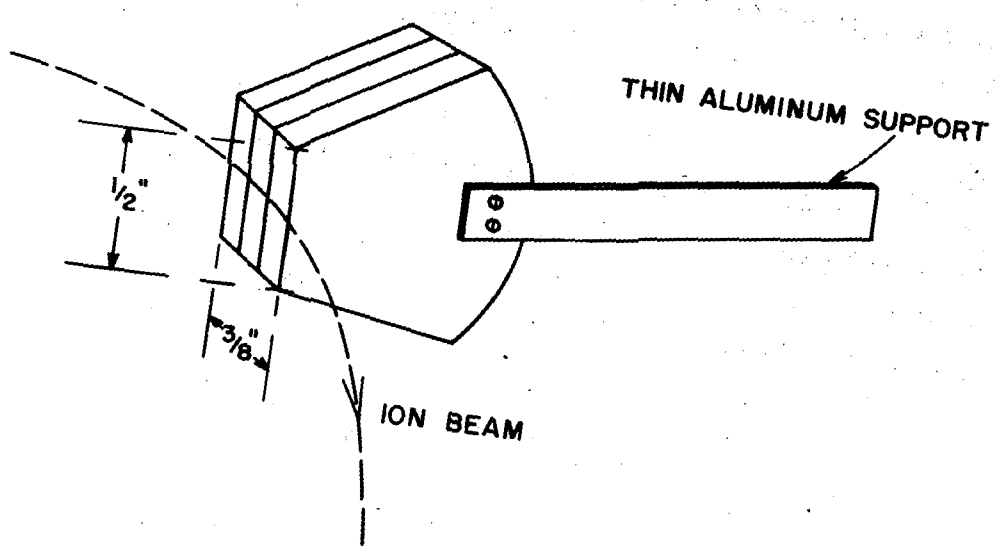

MU-8183

Fig. 2 Details of the carbon target assembly.

corrections for counter dead time and background, each of the observed activities was corrected to a standard distance beneath the counter by means of an empirically determined factor. The only activity observed in the detector foils was the 20.5-minute C^{11} formed by the (n, 2n) reaction on C^{12}.[6]

The number of countable events per unit time C_f produced by the (n, 2n) reaction in each foil at time t_c after the beginning of a bombardment of duration t_b is

$$C_f(t_c) = e^{-\lambda t_c}(e^{\lambda t_b} - 1) \int_{20}^{\infty} N_f n(E)\sigma(E)_{n,2n}\, \eta dE, \tag{1}$$

where N_f is the number of carbon atoms per cm^2 in the foil,

$n(E)$ is the differential neutron spectrum incident on the foil per unit time,

$\sigma(E)_{n,2n}$ is the (n, 2n) excitation function in carbon,

η is the over-all efficiency for counting a decaying C^{11} atom in the standard geometry, and

λ is the decay constant for the 20.5-minute C^{11} activity.

We can define an average (n, 2n) cross section in carbon,

$$\int_{20}^{\infty} n(E)\sigma_n(E)dE = \bar{\sigma}_{n,2n}N_n, \tag{2}$$

where N_n is the total number of neutrons incident on the foil per unit time.

Then

$$C_f(t_c) = e^{-\lambda t_c}(e^{\lambda t_b} - 1)N_f\eta\bar{\sigma}_{n,2n}N_n. \tag{3}$$

All counting rates can be corrected to some standard time t_o,

$$C_f(t_o) = C_f(t_c)e^{\lambda(t_c - t_o)}, \tag{4}$$

so that

$$C_f(t_o) = e^{-\lambda t_o}(e^{\lambda t_b} - 1)N_f \eta \bar{\sigma}_{n,2n} N_n. \tag{5}$$

N_n will be given by

$$N_n = N_t N_d \frac{d\sigma}{d\Omega}(\theta)\Delta\Omega, \tag{6}$$

where N_t is the number of carbon atoms per cm^2 in the target,
N_d is the number of monoergic deuterons (or protons, or He^3 ions) incident on the target per unit time,
$\frac{d\sigma}{d\Omega}(\theta)$ is the differential cross section in carbon for the production of neutrons by deuterons (or protons, or He^3 ions),
and $\Delta\Omega = \frac{A}{r^2}$ is the solid angle subtended by the detector foil.

The differential cross section at the angle of the jth foil then becomes

$$\frac{d\sigma}{d\Omega}(\theta_j) = \frac{C_j(t_o)}{\bar{\sigma}_{n,2n} N_f N_t N_d \eta \Delta\Omega_j e^{-\lambda t_o}(e^{\lambda t_b} - 1)}, \tag{7}$$

and the ratio of cross sections for two foils is

$$\frac{\frac{d\sigma}{d\Omega}(\theta_j)}{\frac{d\sigma}{d\Omega}(\theta_k)} = \frac{r_j^2 C_j(t_o)}{r_k^2 C_k(t_o)}. \tag{8}$$

The angular distributions are then just the adjusted counting rates in each foil, compared to the rate in the foil at 0°, and weighted by the square of the distance between detector foil and target. The counting statistics obtained for each foil were of the order of 1 percent. The distances, of the order of 100 inches, were measured to less than 1/2 percent. All counting rates were corrected for neutron attenuation in the cyclotron tank walls. Each distribution was determined several times with good reproducibility.

Differential Cross Section

The absolute differential cross section for the production of high-energy neutrons by the various ions was measured at 0° by exposing the target

and a single detector foil in a short bombardment, of the order of 20 seconds' duration. After exposure, the detector foil was counted in exactly the same geometry as that used in the determination of the angular distribution. The target was separated, after exposure, into its components, three 1/8-inch truncated wedge sections. Each segment was placed in a dummy graphite form cut from the same stock, so that the assembly had the same right circular cylindrical shape as the detector foil. This was done so that, to the Geiger counter, the target foil should appear equivalent to the detector foil with respect to back-scattering, absorption, and physical geometry. The target-segment counting rates with and without the dummy form differed only by a few percent.

Although the detector foil was exposed uniformly over its volume, each target segment activity was confined to the 1/2-inch inside edge of the wedge, owing to the manner of its exposure. It was necessary to determine the effect of this nonuniform activity distribution, so that the counting rate could be compared directly to that of the detector foil. For this purpose, a 1/8-inch-diameter disk of 1/8-inch-thick graphite was activated, and the C^{11} activity was determined as a function of the radial displacement of the disk (approximating a point source) from a point below the center of the Geiger tube.[7]

At a sufficient distance below the Geiger tube there should be no change in the "effective" solid angle. At the standard distance, to which all counting rates were empirically corrected with an uncertainty of about 1 percent, it was found that this solid angle changed only slowly out to about 1/2 inch, and was down by 15 percent when the lateral displacement of the point source was 1 inch. Since the target activity was confined within a radius of 1/4 inch or so, the effective relative solid angle was unity. For the detector foil, the effective solid angle was determined by integrating the product of the radius and the solid angle for the point source over the radius. This integral was normalized to the foil area, and the effective relative solid angle turned out to be about 0.95.

In the target foils, slight amounts of impurities caused decay activities longer than the desired 20.5-minute period. These longer activities amounted to only a few percent, when the bombardment was kept short, and were subtracted. The total activity in the target was taken to be the sum of the activities in the segments.

The 20.5-minute counting rate C_t produced by monoergic ions (say, deuterons) in the target and adjusted to some time t_o is

$$C_t(t_o) = e^{-\lambda t_o}(e^{\lambda t_b} - 1)N_d N_t \sigma(190)_{n,dn}\eta, \tag{9}$$

where $\sigma(190)_{d,dn}$ is the cross section for the production of C^{11} by deuterons of 190 Mev. (For the other ions, Eq. (9) would contain N_p and $\sigma(340)_{p,pn}$ or N_{He^3} and $\sigma(490)_{He^3,He^3n}$.) Substituting for N_d from Eq. (9) into Eq. (7), we have

$$\frac{d\sigma}{d\Omega}(0^o) = \frac{1}{N_f\Omega_f}\,\frac{\sigma(190)_{d,dn}}{\bar{\sigma}(90)_{n,2n}}\,\frac{C_{Oo}(t_o)}{C_t(t_o)} \tag{10}$$

RESULTS AND DISCUSSION

Deuterons

The angular distribution of neutrons from 190-Mev deuterons on carbon was determined first, in order to check the experimental method, since this distribution had previously been predicted[1] and verified.[2] The results are shown in Fig. 3. The points at 20° and 25° could not be corrected for attenuation of neutrons in the internal deflector system of the cyclotron, and are very probably too low. Foils placed at 90° in the target region showed less than 1 percent background activity. As the general agreement with the previous work was satisfactory, the absolute differential cross section at 0° was determined by the method described above. The ratio $\sigma(190)_{d,dn}/\bar{\sigma}(90)_{n,2n}$ (Table I) was determined by an auxiliary experiment to an accuracy of roughly 10 percent,[8] using as a neutron detector a recoil proton scintillation counter telescope for just the neutron spectrum involved, and was found to be consistent with the results of McMillan and York.[9]

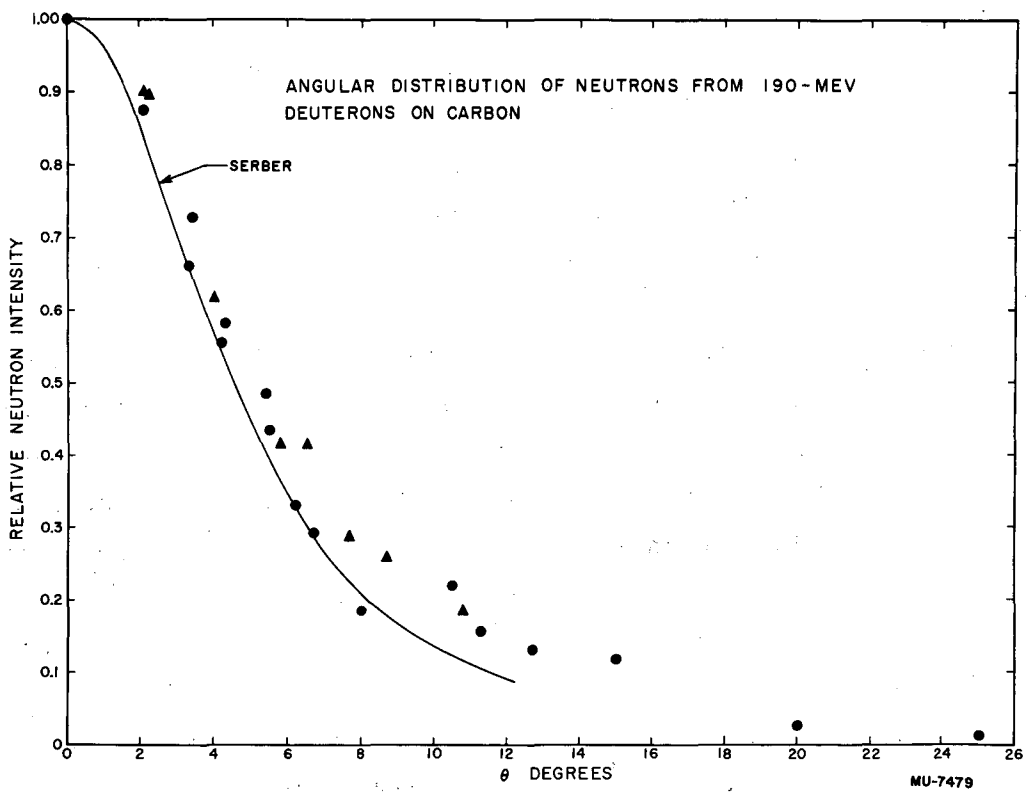

Fig. 3 Angular distribution of neutrons from deuteron stripping in carbon. The triangles and circles represent vertical and horizontal distributions, respectively.

Table I	
Ratios of cross sections for the production of C^{11} by various ions to cross sections for the production of C^{11} by neutrons of the related energies	
$\sigma(190)_{d,dn}/\bar{\sigma}(90)_{n,2n}$ [8]	2.72
$\sigma(340)_{p,pn}/\bar{\sigma}(270)_{n,2n}$ [7]	1.95
$\sigma(490)_{He^3,He^3n}/\bar{\sigma}(160)_{n,2n}$ [8]	4.30

The target-foil counting rates were corrected for activity due to secondary reactions in the thick target, which amounted to about 2 percent. The final result, given in Table II, is substantially in agreement with earlier work of Knox.[10] The total cross section for deuteron stripping has been determined,[11,12] and is, of course, larger than that found by integrating the present distribution, which extends only to about 15°.

Table II	
Differential cross sections at 0° for the production of high-energy neutrons by various ions	
Ion	$\frac{d\sigma}{d\Omega}$ (0°) barns/steradian
340-Mev proton	0.22 ± 0.05
190-Mev deuteron	3.2 ± 0.5
490-Mev He^3 ion	2.0 ± 0.4

Protons

The angular distribution of neutrons from 340-Mev protons was checked and found to be in general agreement with the work of Miller, Sewell, and Wright.[3] The determination of the absolute differential cross section at 0° was complicated by the presence of primary protons at the detector foil position. The proton-neutron ratio at this position was determined by plotting the logarithm of the counting rate as a function of thickness of lead, in several foils placed along the 0° line, as in Fig. 4. The counting rate from neutrons

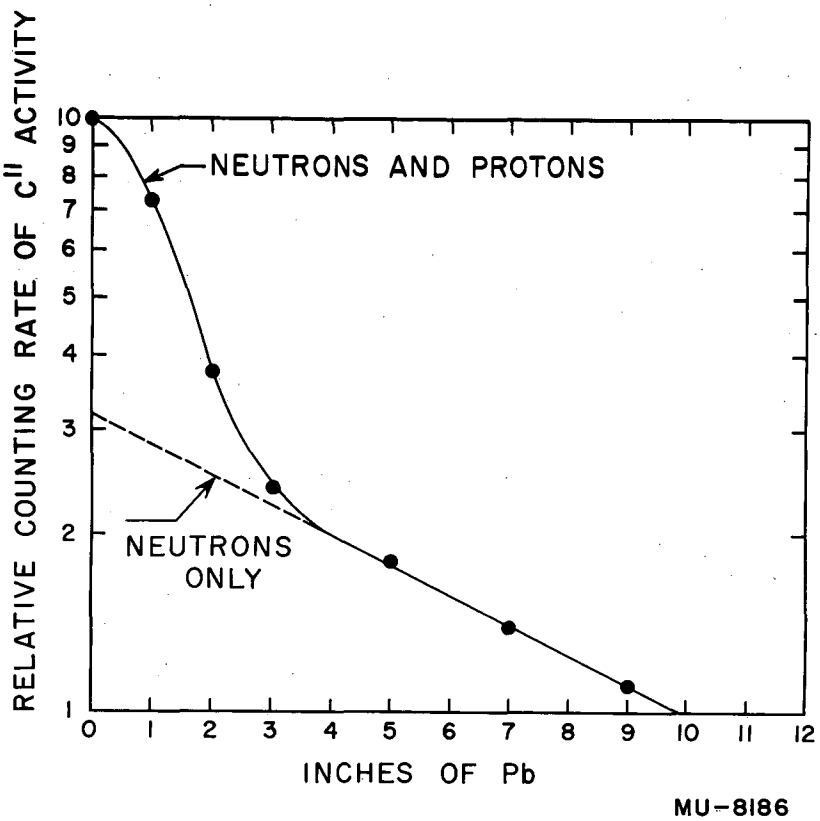

Fig. 4 Determination of the neutron-proton ratio at the detector foil position. Linear extrapolation of the neutron attenuation curve in Pb shows that the neutrons comprised 32 percent of the total activity observed.

alone is then the intercept of the linearly extrapolated neutron-attenuation curve. The ratio of cross sections for the production of C^{11} in the target and in the detector, $\sigma(340)_{p,pn}/\bar{\sigma}(270)_{n,2n}$, is known to roughly 10 percent (Table I).[7,13] The final result is given in Table II.

He^3 Ions

The angular distribution of neutrons from 490-Mev He^3 ions, determined by the method described above, is shown in Fig. 5. The half width at half maximum is about 5.5°. This narrow beam suggests that the neutrons are produced primarily by stripping, since an estimate of the width to be expected from the ratio of binding energy to kinetic energy is $\theta \sim \sqrt{\epsilon/E_{He^3}} = 7^{\circ}$. The angular distribution to be expected from the theoretical considerations, using an approximate wave function for the He^3 nucleus, has been calculated by Dr. Warren Heckrotte.[14]

The production of high-energy neutrons from the interaction of high-energy He^3 nuclei with heavier target nuclei results from the stripping off of one or both of the protons of He^3. One would not, however, expect the two protons to be stripped off simultaneously, so that we need consider the effect of only one proton's being stripped off. The cross section and the angular and energy distributions can be calculated in a manner similar to that for the production of neutrons or protons from the stripping of high-energy deuterons.[1]

It must be recognized, though, that in calculating the angular and energy distributions it is necessary to take into account the interaction between the neutron and the remaining proton after the stripping event. The interaction can lead to the formation of a deuteron;[4,15] or if the neutron and proton remain unbound, the interaction can be expected to influence their subsequent motion. Because of the virtual level of low relative energy in the singlet p-n state, the effect of interaction is to reduce substantially the half width of the momentum distribution of the neutron (or proton) from what would be obtained with neglect of this interaction between the outgoing neutron and proton. The calculated angular distribution of the neutrons, a simple Gaussian form being assumed for the He^3 wave function, is shown in Fig. 6. The angular distribution that results when the interaction between the outgoing neutron and proton is neglected is also shown for the sake of comparison.

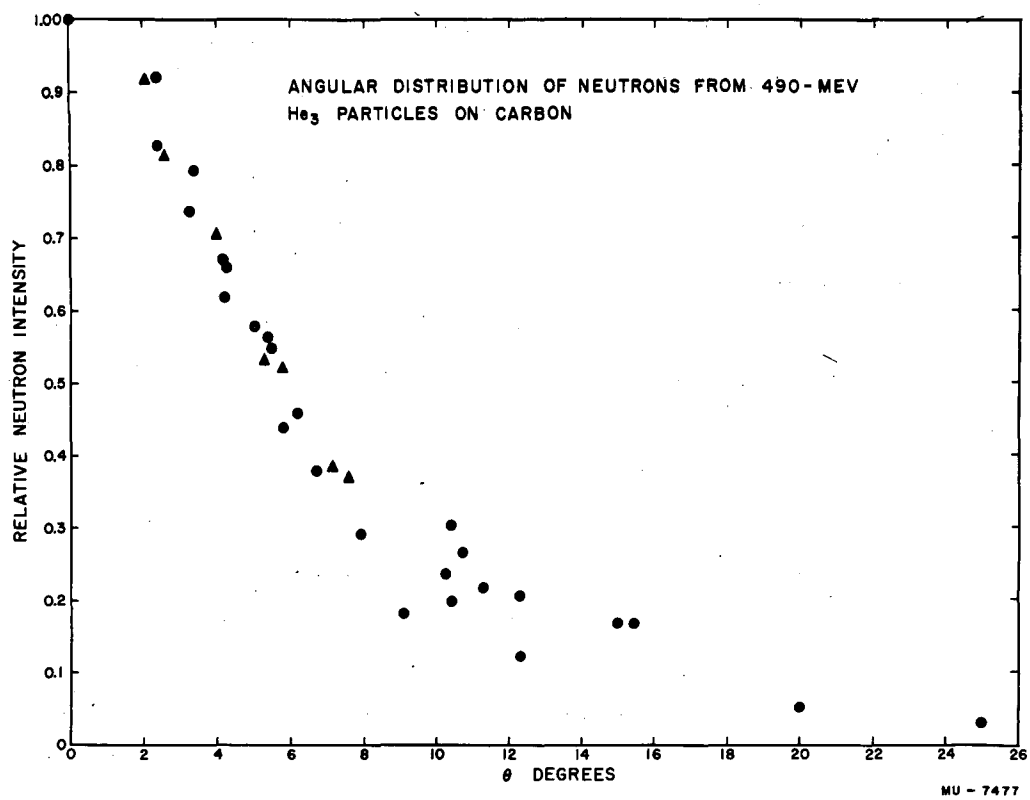

Fig. 5 Angular distribution of neutrons from He^3 stripping in carbon. The triangles and circles represent vertical and horizontal distributions, respectively.

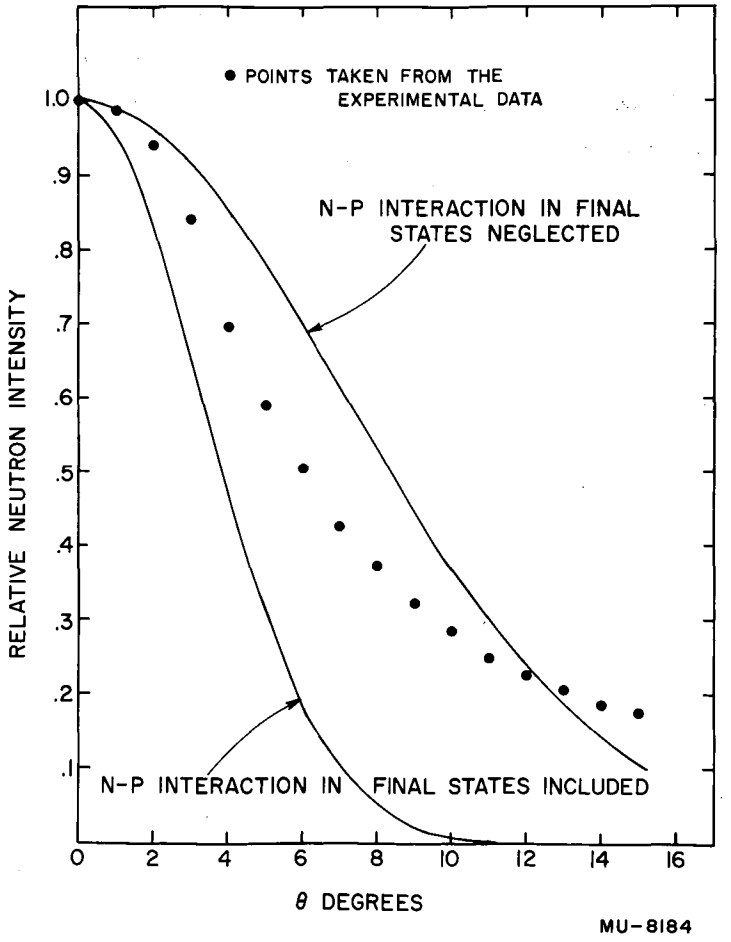

Fig. 6 Theoretical angular distribution of neutrons from He^3 stripping.

The ratio of cross sections for the production of C^{11} in the target and the detector, $\sigma(490)_{He^3, He^3n}/\bar{\sigma}(160)_{n, 2n}$, was measured with the telescope to about 10 percent (Table I).[8] The final result is given in Table II.

ACKNOWLEDGMENTS

This work was done under the general supervision and with the helpful interest of Dr. C. M. Van Atta. We are indebted to J. T. Vale and the cyclotron staff for their assistance and cooperation. Thanks are due to Wallace Birnbaum, Marian Whitehead, Robert V. Pyle, Donald A. Hicks, and Robert M. Main for their helpful assistance. The authors especially wish to thank Warren Heckrotte for his valuable discussions.

REFERENCES

1. R. Serber, Phys. Rev. 72, 1008 (1947).
2. A. C. Helmholz, E. M. McMillan, and D. C. Sewell, Phys. Rev. 72, 1003 (1947).
3. R. D. Miller, D. C. Sewell, and R. W. Wright, Phys, Rev. 81, 374 (1951).
4. John Ise, Jr., R. V. Pyle, D. A. Hicks, and R. M. Main, Rev. Sci. Instr. 25, 437 (1954).
5. J. E. Brolley, J. L. Fowler, and L, K. Schlacks, Phys. Rev. 88, 618 (1952).
6. Nuclear Data, NBS Circular 499 (1950).
7. R. L. Aamodt, V. Peterson, and R. Phillips, Phys. Rev. 88, 739 (1952).
8. W. Birnbaum et al., reported at the Washington meeting, May 1954.
9. E. M. McMillan and H. York, Phys. Rev. 73, 262 (1948).
10. W. J. Knox, unpublished.
11. L. Schecter et al., Phys. Rev. 90, 633 (1953).
12. G. P. Millburn et al., Phys. Rev. 95, 1268 (1954).
13. S. D. Warshaw, R. A. Swanson, and A. H. Rosenfeld, reported at the Washington meeting (1954).
14. W. Heckrotte, private communication.
15. W. Heckrotte, The Production of High-Energy Deuterons by the Stripping of He^3, Thesis, University of California Radiation Laboratory, Report No. UCRL-1868, April 14, 1952.