UCRL 2369

UNIVERSITY OF CALIFORNIA

Radiation Laboratory

TWO-WEEK LOAN COPY

This is a Library Circulating Copy which may be borrowed for two weeks. For a personal retention copy, call Tech. Info. Division, Ext. 5545

BERKELEY, CALIFORNIA

DISCLAIMER

This document was prepared as an account of work sponsored by the United States Government. While this document is believed to contain correct information, neither the United States Government nor any agency thereof, nor the Regents of the University of California, nor any of their employees, makes any warranty, express or implied, or assumes any legal responsibility for the accuracy, completeness, or usefulness of any information, apparatus, product, or process disclosed, or represents that its use would not infringe privately owned rights. Reference herein to any specific commercial product, process, or service by its trade name, trademark, manufacturer, or otherwise, does not necessarily constitute or imply its endorsement, recommendation, or favoring by the United States Government or any agency thereof, or the Regents of the University of California. The views and opinions of authors expressed herein do not necessarily state or reflect those of the United States Government or any agency thereof or the Regents of the University of California.

UCRL-2709
Unclassified Chemistry

UNIVERSITY OF CALIFORNIA
Radiation Laboratory
Berkeley, California

Contract No. W-7405-eng-48

CHEMISTRY DIVISION QUARTERLY REPORT

June, July, August 1954

September 30, 1954

Printed for the U. S. Atomic Energy Commission

CHEMISTRY DIVISION QUARTERLY REPORT

June, July, August 1954

Contents

BIO-ORGANIC CHEMISTRY

Enzyme Concentrations in the Brain and Adjustive Behavior Patterns 4

Studies on Adenine Metabolism 7

A Method for Preparing Codeinone 9

Carbon Dioxide Fixation by Rhodopseudomonas capsulatus 11

Enzymatic Carboxylation of Ribulose-1:5-Diphosphate . . 16

Synthetic Sequence of 3- and 2-Phosphoglycerate in Photosynthesis 17

Apparatus for Measuring Photosynthetic Rate and Quantum Yields in Photosynthesis 17

4, 6-Disubstituted Hexanoic Acids 18

Respiratory Metabolism of Labeled Organic Compounds . . 19

The Effect of Substrate Concentration on the $C^{14}O_2$ Metabolism of Acetate in Normal Rats 20

The Effect of Cobalt-60 Irradiation on the Respiratory Metabolism of Certain Compounds in Mice 23

NUCLEAR CHEMISTRY

Theoretical Study of Alpha Decay of Spheroidal Nuclei . . 28

Scintillation Spectrometer Study of Neptunium-238. . . . 28

Gamma-Ray Irradiation of Di-isopropyl Ether 29

Degassing Liquids 31

Equilibrium Measurements on Rare Earth Fluorides . . . 32

Isomeric State of Yttrium-88 in the Decay of Zirconium-88 33

Neptunium-240 and Neptunium-241 35

Higher Oxidation States of Actinides 36

The Composition of Curium Oxide 36

Preparation of Rare Earth and Actinide Metals 37

Nuclear Quadrupole Resonance 38

* Previous Quarterly Reports: UCRL-2647, 2531

Double-Retarding-Field Electrostatic Beta-Ray Spectrometer 41
Optical Spectroscopy 41
Mass Spectroscopy 42

CHEMICAL ENGINEERING (PROCESS CHEMISTRY)
Notes on Work in Progress 44

GENERAL CHEMISTRY
Metals and High-Temperature Thermodynamics 45
Basic Chemistry, Including Metal Chelates 46

CHEMISTRY DIVISION QUARTERLY REPORT

June, July, August 1954

September 30, 1954

BIO-ORGANIC CHEMISTRY

M. Calvin, Director
Edited by B. M. Tolbert

ENZYME CONCENTRATIONS IN THE BRAIN AND ADJUSTIVE BEHAVIOR PATTERNS

Edward L. Bennett and Barbara Krueckel
(With David Krech and Mark R. Rosenzweig, Dept. of Psychology)

In collaboration with Professors David Krech and Mark R. Rosenzweig of the Department of Psychology at the University of California, an investigation into the metabolism of the brain and the adjustive behavioral patterns of the rat has been initiated. Because the metabolism of the brain depends upon its enzyme systems, several studies have been made recently on the relationship between such enzymes as cholinesterase and various behavior patterns. The evidence for the necessity of acetylcholine and cholinesterase in neural conduction seems conclusive.

In any study designed to obtain an understanding of the part that brain metabolism plays in behavior, two basic conditions must be considered:

A. The brain is not an undifferentiated, homogeneous organ. Different areas of the brain are histologically and functionally different. Thus, any quantitative chemical analysis of the brain should take into account these vital functional differences. Most of the work up to the present time has tended to describe the chemical activity of "the brain" rather than to seek a differential analysis of the metabolism in the various functionally different brain areas as a possible guide to the understanding of the physical substratum of behavior.

B. The second consideration refers to the behavioral measurements. In relating chemical events in the brain to behavior it is desirable that the behavior measured and the tests used meet certain fairly stringent criteria. Among these are the following:

(1) The behavior test should yield reliable and quantitative scores.

(2) The behavior being tested should reflect some stable characteristic of the organism--it cannot be something that reflects too greatly adventitious factors at the time of testing.

(3) The behavior should also have clear functional significance in the normal economy of the organism.

(4) The testing procedure should involve a minimum of physiological interference with the "normal" responses of the organism.

(5) The test should permit the display of individual differences among the various subjects.

(6) Finally, if possible, the behavior should be such as to suggest the nature of its neurological control, and hence where, in the central nervous system, it would be most profitable to seek biochemical correlates.

For the behavior test, a standardized insolvable maze has been used. The rat cannot learn the maze, since after each run the pattern of illumination cues and of correct alleys is changed. In his attempts to reach the food box the rat expresses "hypotheses." Thus, for example, an animal may systematically choose the lighted alleys (a "visual hypothesis") or he may consistently choose the left alleys (a "spatial hypothesis"). (The behavioral testing was done by Professors Krech and Rosenzweig.)

The chemical test measured the concentration of cholinesterase (ChE) in six areas of the cortex of the rat brain. In each hemisphere 10 to 20 mg of tissue was taken from the visual, somesthetic, and motor areas (the last area being included for control purposes). The samples of tissue were weighed and homogenized in cold 0.9% saline and diluted to 10 ml. Eight to 12 mg of tissue was used in each determination. The rate of hydrolysis of acetylcholine perchlorate (ACh) at pH 7.95 and 37° was determined anaerobically with a pH meter equipped to maintain constant pH through an automatic-recording syringe buret.* Corrections were made for the "blank" hydrolysis of ACh.

Sixty male rats were tested behaviorally. Cholinesterase analyses were made of the brains of ten rats with strong spatial preferences (Group I) and of ten rats with strong visual preferences (Group II). After behavioral testing, the animals were delivered, with neutral code designations, for chemical testing. One animal from each group was analyzed on each day. The samples of tissue were removed by gross dissection after the animal had been sacrificed by decapitation.

The data are presented in Table I. (The values for animal B-3, the first of our experimental animals to be tested chemically, deviates so widely--approximately four standard deviations--from the means of the rest of its group, that we have not used his data in the computations that follow. This animal's data are presented in the table in parentheses but will not be considered further in this paper.) The most general result is that the ChE activity of the rat's visual cortex is approximately 20% lower than that of either the somesthetic or the motor area. The respective t values are 3.83 and 5.92; thus, the probability of obtaining such differences by chance is approximately 1 in 1000. The visual cortex, physiologically and cytoarchitectonically different from the other areas, is demonstrated to be different in ChE concentration as well.

Perhaps even more interesting are the enzymatic differences observed when the animals are separated into two groups by the behavioral test. In the first place, the patterns of ChE activity are different. The visual-hypothesis rats show a progressive increase in ChE activity from the visual, through the somesthetic, to the motor area--the differences being statistically significant. The spatial animals show no consistent difference between the somesthetic and motor areas. Even more striking are the differences in level of ChE activity. Group I shows significantly higher ChE activity than Group II in both sensory areas--the visual and somesthetic--but the groups do not differ in the control motor area. The greatest differences are found when the ChE activities in the

---

* We are indebted to Drs. J. B. Neilands and M. D. Cannon, who kindly permitted us to use the automatic recording titrator. For the later analyses we have used our instrument of similar design. This instrument is admirably suited to determining the rate of chemical or enzymatic reactions producing acid or base.

Table I

Hypothesis-preference scores and cortical cholinesterase activity in ten spatial-preference rats and ten visual-preference rats with *t*-tests for differences between groups.

Group I - Spatial						Group II - Visual					
Rat No.	Pref. Scores*	Cholinesterase Activity in Different Cortical Areas** V	S	M	$\frac{V+S}{2}$	Rat No.	Pref. Scores	Cholinesterase Activity in Different Cortical Areas V	S	M	$\frac{V+S}{2}$
B-1	+185	56	69	62	62	D-44	-250	41	66	76	54
B-7	+150	52	72	64	62	D-12	-173	47	57	64	52
C-1	+142	56	61	58	58	X-52	-165	40	46	49	43
C-17	+136	51	71	70	61	D-46	-162	52	78	80	65
(B-3)	(+121)	(27)	(47)	(46)	(37)	D-18	-92	41	54	66	48
Y-74	+103	79	55	69	67	C-3	-74	46	52	54	49
C-28	+69	55	64	65	60	C-10	-58	48	53	59	50
B-9	+42	56	69	82	62	X-55	-51	52	54	63	53
C-26	+36	56	68	73	62	X-51	-49	45	54	61	50
C-9	+35	59	70	74	64	X-53	-24	63	63	70	63
Means	99.9	57.8	66.6	68.6	62.0	Means	-109.8	47.5	57.7	64.2	52.7
N = 9						N = 10					

	V	S	M	$\frac{V+S}{2}$
Over-all means (N = 19)	52.4	61.9	66.3	57.1
t for differences between groups	2.96	2.54	1.12	3.92
p.	.01	.02	.3	.001

* Plus values indicate spatial, minus values, visual preferences.

** Expressed as moles ACh x 10^{10} hydrolyzed/min/mg. of tissue. The data for the two hemispheres of each rat have been averaged.

two sensory areas are the averages, (V + S)/2. All nine of the spatial animals score above 57.1 (the mean for all nineteen animals), and eight of the ten visual animals score below 57.1. Thus, animals separated by the purely behavioral test of hypothesis preference show decided differences in the ChE activity of the cerebral cortex.

These studies represent only an exploratory investigation into possible differences in the metabolism of the brain. It is planned to extend the study in several directions, including more refined animal-testing procedures, an investigation into the effect of genetic factors on the observed phenomena, and further investigations into chemical differences that may exist.

STUDIES ON ADENINE METABOLISM

Edward L. Bennett, Barbara Krueckel, and Martha Kirk

The studies of adenine metabolism are being extended to a comparative investigation of the metabolism of adenine-4, 6-C^{14}, adenine-8-C^{14}, and adenine-2-C^{14}. In this study we hope to determine if any of the above-mentioned carbon atoms of the adenine molecule are independently metabolized, either as the adenine is being incorporated into the nucleotides, ribose nucleic acid (RNA), or desoxyribose nucleic acid (DNA), or subsequent to its incorporation. Independent metabolism of several of the carbon atoms of adenine would appear to be a real possibility in view of our present knowledge of the mechanism of nucleotide synthesis and the role of folic acid derivatives in these metabolic pathways. To our knowledge, no comparative study has been made of the metabolism of adenine labeled in several positions.

In the first experiment, which is not completed yet, we have injected one group of C-57 male mice with adenine-4, 6-C^{14} and at the same time a second group with a similar amount of adenine-8-C^{14}. The animals have been sacrificed at comparable periods from one to twenty-eight days subsequent to the administration of the adenine. Estimation of the amount of adenine-4, 6-C^{14} or adenine-8-C^{14} incorporated into the nucleotides, RNA, or DNA of liver, small intestine, large intestine, kidneys, and carcass at comparable times indicates that the adenine labeled in the 4, 6- and the 8-positions is metabolized at approximately the same rate. However, more quantitative determinations of the specific activity of the adenine in each of the fractions have yet to be made by the paper chromatographic and enzymatic methods previously described.

In addition to the study of the adenine incorporation into the nucleotides, RNA, and DNA, the $C^{14}O_2$, and $C^{14}O_2/C^{12}O_2$ ratio in the respiratory CO_2 after administering adenine-4, 6-C^{14} or adenine-8-C^{14} have been determined continuously for three days using the continuous analyzer previously described (UCRL-2531, April 1, 1954). Since the amount of $C^{14}O_2$ in the respiratory CO_2 was small, and the amount of C^{14}-containing compounds excreted in the urine were relatively large, difficulty was encountered from decomposition (presumably bacterial) occuring in the urine. To obviate this difficulty, small amounts of mercuric chloride solution and sulfanilamide were placed on a filter-paper disk on the bottom of the animal cage. Fresh cages were used daily.

Table II summarizes the data obtained for several mice. It has been assumed that the respiratory $C^{14}O_2$ from the metabolism of adenine-4, 6-C^{14} represents the 6-position of the adenine, which is converted to allantoin. The respiratory $C^{14}O_2$ from adenine-8-C^{14} may arise from the ring opening and formyl interchange at position 8 of the adenine, which is converted to hypoxanthine or its derivatives. Further work must be done to test this suggestion.

Table II

Respiratory $C^{14}O_2$ obtained after administration of adenine-C^{14} to C-57 male mice.

(Cumulative % of injected adenine)

Time (Hrs.)	Adenine-8-C^{14}		Adenine-4, 6-C^{14}	
0-1	0.08	0.05	0.21	0.26
0-2	0.23	0.11	0.93	0.90
0-4	0.84	0.26	2.40	2.15
0-8	1.45	1.03	4.4	4.0
0-12	2.30	1.80	5.8	4.9
0-24	2.92	2.79	8.9	6.7
0-36	3.6	3.2	10.6	7.7
0-48	3.80	4.0	12.2	8.8
0-60	4.0		13.2	10.1
0-72	4.2			11.2

A METHOD FOR PREPARING CODEINONE

Henry Rapoport and Helen N. Reist

In the course of preparing various glycosides of codeine[1] for biological investigations, we were induced by the consistently poor yields to examine the reaction in greater detail. The procedure being employed was the usual treatment of a benzene solution of an alcohol (codeine) with an acetylglycosyl bromide in the presence of silver carbonate. As the reaction proceeded, there was a pronounced frothing and the silver carbonate became black. Analysis of the benzene-insoluble material at the conclusion of the reaction established the presence of considerable free silver, indicating that an unexpected oxidation had occurred. That it was the codeine being oxidized was demonstrated by an experiment in which the acetylglycosyl bromide was omitted and from which codeinone was isolated in fair yield.

A study was then made of various factors in this reaction and their effect on the yield of codeinone. The quantity of silver carbonate, the mode of addition of silver carbonate and codeine, and the time of reflux were all varied, and conditions were found that resulted in a 75% yield of codeinone. These consisted of simply heating under reflux a solution of codeine in benzene with 500 mole percent of silver carbonate. Although the chromic acid oxidation of codeine to codeinone has been much improved recently[2] and an excellent Oppenauer oxidation procedure is now available,[3] the simplicity and very good yield of the present silver carbonate method make it an attractive alternative for preparing codeinone.

A search of the literature revealed no such previous application of silver carbonate, although silver oxide in anhydrous ether has been used in the preparation of quinones[4,5] and silver salts (and silver hydroxide) have served for various oxidations.[5] In seeking possible extensions and limitations of this silver carbonate oxidation procedure, the reactions with dihydrocodeine and neopine were tried. No reaction took place with dihydrocodeine and it was recovered quantitatively. With neopine definite blackening of the silver carbonate occurred, but the only isolable product was neopine in an 18% recovery.

Experimental

Preparation of Silver Carbonate. The yellow precipitate of silver carbonate formed when 300 ml of an aqueous solution containing 25.6 g of sodium bicarbonate was added to 480 ml of 10% aqueous silver nitrate was washed by decantation six times with 1.5-liter portions of distilled water and four times

---

1. P. Casparis, E. Kühni, and E. Leinzinger, Pharm. Acta Helv. 24, 145 (1949).
2. S. P. Findlay and L. F. Small, J. Am. Chem. Soc. 72, 3247 (1950).
3. Mallinckrodt Chemical Works process, as described by S. P. Findlay and L. F. Small, ibid. 73, 4001 (1951). Using this process we have obtained repeated yields of 40%–60% of codeinone.
4. R. Willstätter and A. Pfannstiel, Ber. 37, 4744 (1940).
5. e.g., J. Houben, "Die Methoden der Organischen Chemie," Vol. 2, Verlag Georg Thieme, Leipzig, Third Edition, 1952.

with 700-ml portions of methanol. It was then transferred to and washed on a suction-filter funnel using a total of 2 liters of absolute ether. After being sucked dry on the funnel for about 20 min, the product was stored in vacuo over magnesium perchlorate in the dark. When first prepared, the silver carbonate is yellow, but on storage the color gradually changes to yellow-green and finally brown. This seems to have no adverse effect on its ability to oxidize codeine, and preparations more than a month old have been used sucessfully.

Analysis: Calcd. for Ag_2CO_3: Ag, 78.2%; C, 4.4%.
Found: Ag, 78.1%; C, 4.4%.

Codeinone. After 25 ml was distilled from a solution of 6 g (0.02 mole) of codeine in 125 ml of benzene, 27.6 g (0.1 mole) of silver carbonate was added and the mixture was heated under reflux with rapid stirring in a nitrogen atmosphere for one hour during which an additional 10 ml of solvent was removed by distillation. The hot mixture was then filtered, the insoluble portion was digested with two 50-ml portions of benzene, and the combined filtrate and digests were concentrated at the water pump until crystals began to appear. These were removed by filtration after cooling, and the filtrate was further concentrated. In this manner, two crops were obtained, for a total of 4.5 g (75% yield), melting at 179°-182° to a characteristic red melt. On recrystallization from benzene using decolorizing carbon, 4.0 g of practically colorless codeinone resulted, mp 181°-182°; $[\alpha]_D^{21}$ -208° (c, 1.0, 95% ethanol). (Reported[2] mp 181.5°-182.5°; $[\alpha]_D^{20}$ -205° (c, 0.8, 99% alcohol).)

Codeinone oxime hydrochloride was prepared and melted at 257°-260° with decomposition (reported[2] mp 258°).

On reduction with sodium borohydride, codeinone was converted to codeine,[6] mp 156°-157°.

6. M. Gates, J. Am. Chem. Soc. 75, 4340 (1953).

CARBON DIOXIDE FIXATION BY RHODOPSEUDOMONAS CAPSULATUS

A. O. M. Stoppani,[1] R. Clinton Fuller, and Melvin Calvin

Rhodoseudomonas capsulatus is a nonsulfur purple bacteria (Athiorhodaceae) which photoreduces carbon dioxide with organic hydrogen donors (fatty acids, amino acids, etc.) or molecular hydrogen,[2,3,4] and on the other hand, can grow in the dark in the presence of oxygen, with the same organic substrates as source of carbon.

Methods developed in this laboratory for the study of CO_2 fixation in green algae have now been used in a study of the mechanism of carbon dioxide fixation by Rhodopseudomonas capsulatus to compare the photoautotrophic and chemoautotrophic mechanism of carbon assimilation in purple bacteria which heretofore was unexplored. Rhodopseudomonas capsulatus has the advantage over other species of the same group that it does not require hydrogen donors (or oxygen acceptors), which interfere with the chromatography of the fixation products.

A special arrangement of apparatus was developed so that the organisms could photosynthesize in controlled gaseous atmospheres (see Fig. 1). The results of these experiments can be summarized as follows:

The average rate of fixation of $C^{14}O_2$ in the light is about 10 times the rate of fixation in the dark. In the inorganic medium hydrogen is essential for an efficient assimilation in the light, while a mixture of hydrogen and oxygen gives the highest assimilation in the dark (see Fig. 2).

In the light, carbon dioxide is mainly assimilated through the phosphoglyceric acid cycle, and slowly through the "malic reaction" or Krebs cycle. In the dark, the assimilation seems to take place primarily through the "malic reaction" and the Krebs cycle. A slow but significant rate of formation of PGA indicates that the "reduction pathway" is still functioning in the dark. (Figs. 3 and 4).

---

1. On leave from the Department of Biochemistry, School of Medicine, University of Buenos Aires.
2. H. Gaffron, Biochem. Z. 275, 301 (1935).
3. C. S. French, J. Gen. Physiol. 26, 711 (1937).
4. C. B. van Niel, Bact. Rev. 8, 1 (1944).

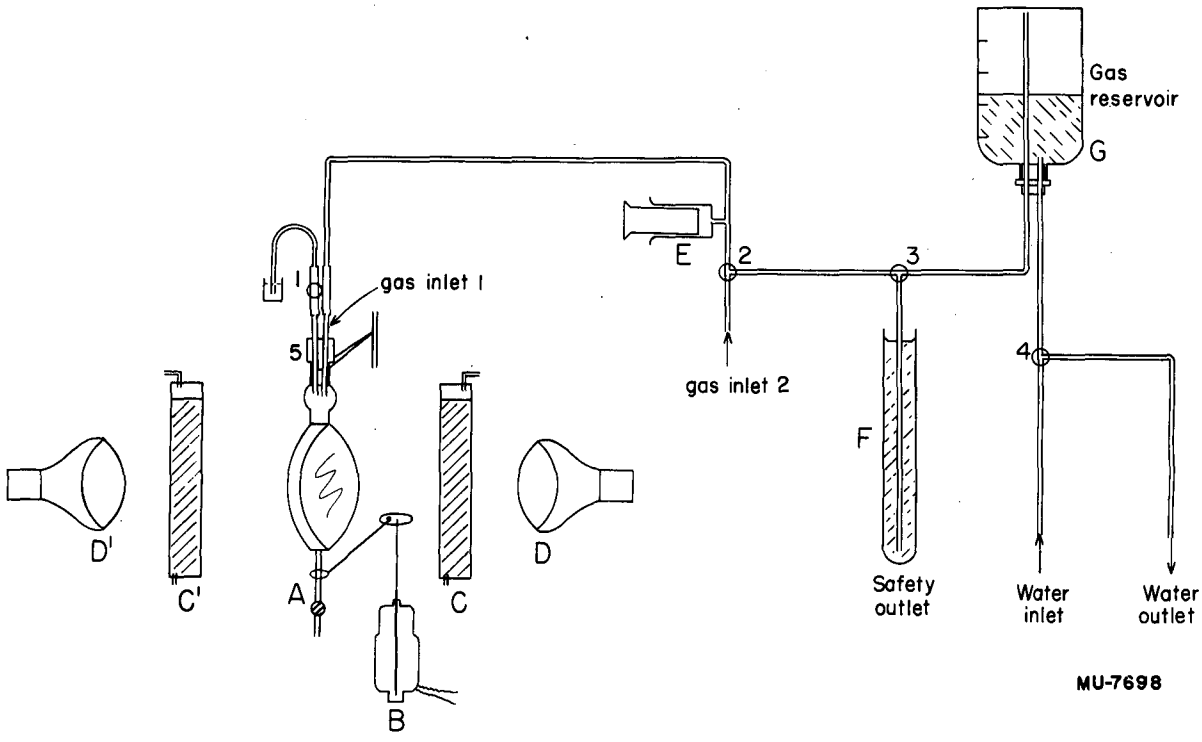

Figure 1

Device for $C^{14}O_2$ fixation by Rhodopseudomonas capsulatus in a closed space. A, reaction cell ("lollipop"), B, stirrer; C, C', infrared filters; D, D', 300 W light sources; E, volume compensator; G, gas reservoir.

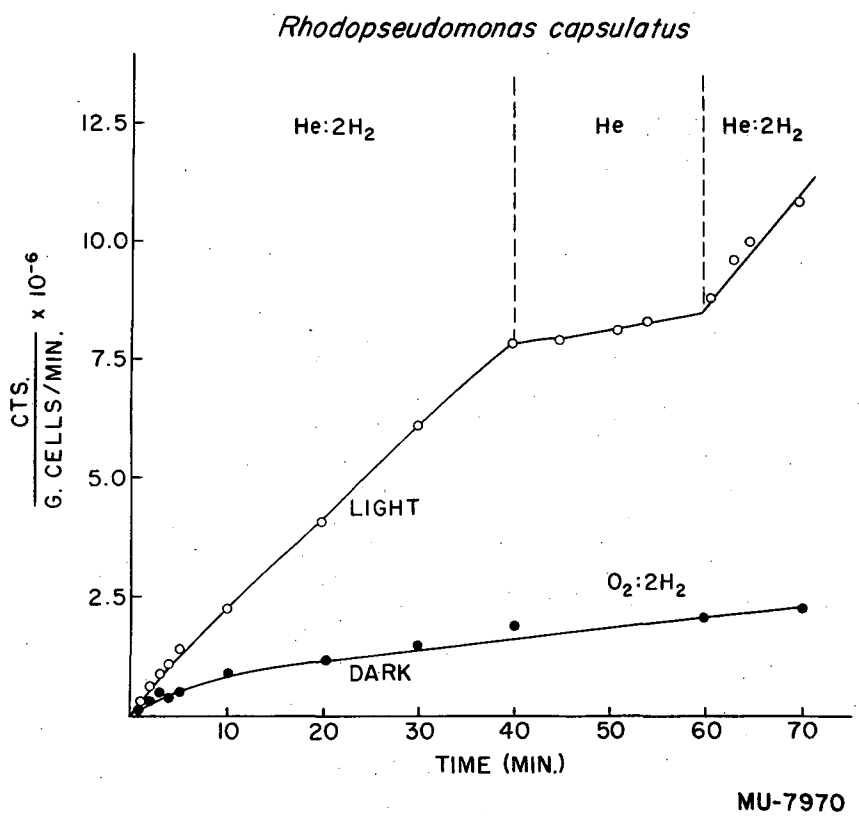

Figure 2

Action of hydrogen on the rate of fixation of $C^{14}O_2$ fixation by Rhodopseudomonas capsulatus in the light. 57 mg/ml cells. 31 ml suspension. o Light fixation. ● Dark fixation.

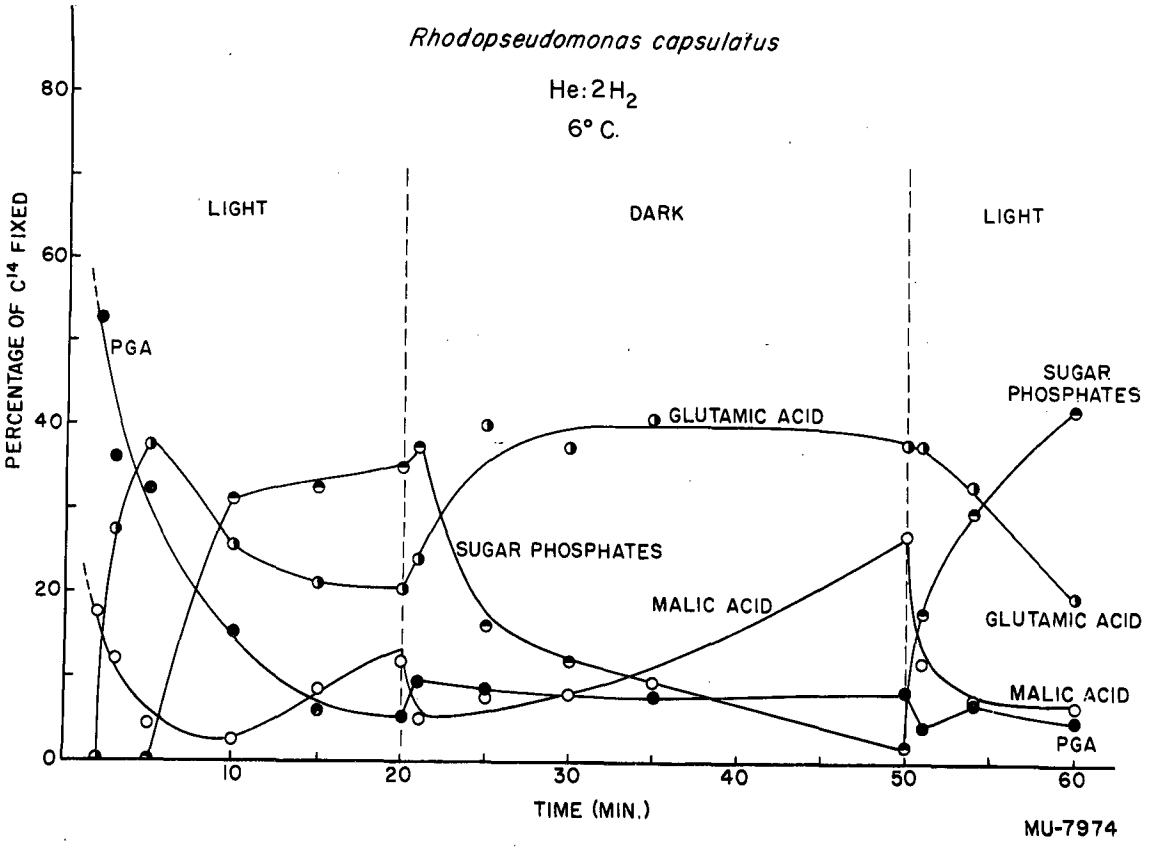

Figure 3

Action of light-dark-light changes in the relative distribution of C^{14} after fixation of $C^{14}O_2$ by Rhodopseudomonas capsulatus. 32 mg/ml cells. 35 ml suspension. Hydrogen atmosphere. Temp.: 4°.

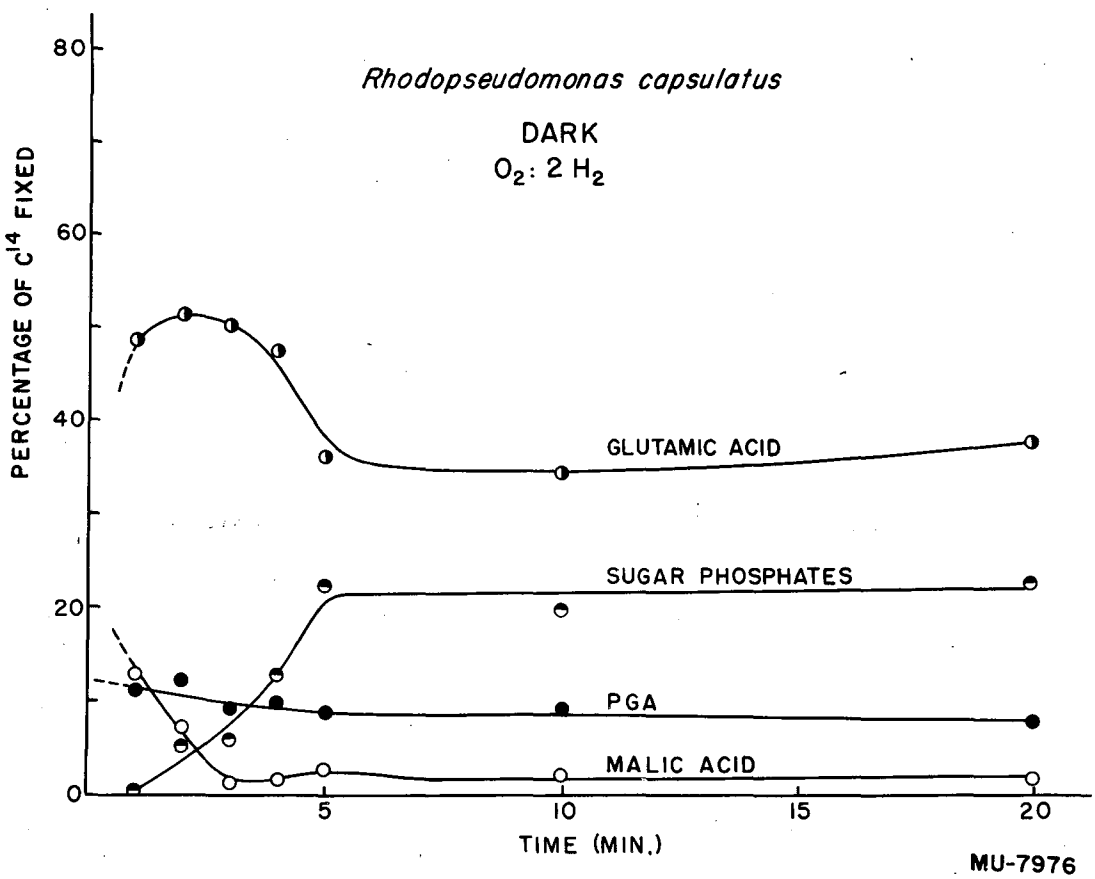

Figure 4

Relative distribution of C^{14} after fixation of $C^{14}O_2$ by Rhodopseudomonas capsulatus in the dark. 44 mg/ml cells. 41 ml suspension. $2H_2:O_2$ in the gaseous space.

ENZYMATIC CARBOXYLATION OF RIBULOSE-1:5-DIPHOSPHATE

John R. Quayle

During the past three months the study of the enzymatic carboxylation of RDP, as reported in J. Am. Chem. Soc. 76, 3610 (1954) by J. R. Quayle et al., has been continued. That communication announced the preparation of a cell-free extract from Chlorella which could effect the carboxylation of RDP to give phosphoglyceric acid as a major product.

If the extract is centrifuged at 40,000 rpm a green, particulate fraction, probably consisting of plastid material, can be removed without appreciable loss of enzymatic activity in the supernatant. Tests for RDP-carboxylating activity in this particulate fraction have given negative results, indicating the soluble nature of the enzyme system prepared by this method.

The carboxylating system appears to be stable in the extract for at least 24 hours at $0^{o}-3^{o}$. Light has little, if any, effect on the carboxylating activity of the crude extract or of the plastid-free supernatant.

There appear to be three possible routes that the carboxylation may take:

1) $$\text{RDP} + CO_2 \xrightarrow{H_2O} 2\ \text{PGA}$$

2) $$\text{RDP} + CO_2 \xrightarrow{TPNH^+} \text{PGA} + \text{triose phosphate}$$

The $TPNH^+$ could then be regenerated by oxidation of the triose phosphate to PGA.

3) $$\text{RDP} + CO_2 \longrightarrow \text{phosphohydroxy pyruvate} + \text{triose phosphate}.$$

The oxidation-reduction of these two products to two molecules of PGA could then be linked through TPN (or DPN) oxidation-reduction. It is therefore important to see if the carboxylation reaction shows a TPN (or DPN) dependence. The extract was treated with charcoal to remove pyridine nucleotides[1] with loss of only ~20% of its carboxylating activity, and the effect of adding TPN on the carboxylation of RDP was observed. A slight stimulation of fixation was apparent; in view of the other enzyme systems present in the extract, however, such a small effect is not really significant. This problem is currently being investigated in conjunction with Dr. H. L. Kornberg, using various inhibitors designed to trap any triose phosphate should it be formed at any stage of the reaction.

---

1. J. F. Taylor, et al., J. Biol. Chem. 173, 619 (1948).

SYNTHETIC SEQUENCE OF 3- AND 2-PHOSPHOGLYCERATE IN PHOTOSYNTHESIS

Andrew A. Benson

Previous reports from this group have suggested that 2-phosphoglyceric acid (2-PGA) may be the product of the carboxylation. This had been considered feasible because of analogy to the glycolytic sequence. The present concept of PGA's being the product of ribulose diphosphate carboxylation leads one to expect 3-PGA as the most likely first product.

The two phosphoglyceric acids are very nicely separated by the method of Cowgill (unpublished). In this paper chromatographic procedure, molybdate-3-PGA complex formation during chromatography on molybdate-washed paper impedes the movement of 3-PGA and not that of 2-PGA. As a result the relative R_f values are 2-PGA, 1.0 and 3-PGA, 0.4.

Scenedesmus which had photosynthesized in the presence of $C^{14}O_2$ long enough to give equal C^{14} labeling of the PGA was chromatographed by this method and showed 4% 2-PGA. Phosphoglyceric acid from a 5.4-second photosynthesis experiment with Scenedesmus was found to have slightly less 2-PGA. If 2-PGA were a primary carboxylation product one would expect a larger fraction labeled in such a brief photosynthesis.

APPARATUS FOR MEASURING PHOTOSYNTHETIC RATE AND QUANTUM YIELDS IN PHOTOSYNTHESIS

James A. Bassham and Kazuo Shibata

A system has been developed for measuring the rate of photosynthesis of algal suspensions as a function of CO_2 pressure and light. This system measures both carbon dioxide uptake and oxygen evolution. The apparatus includes a closed gas-circulating system in which the gas passes through a pump, an algae vessel with transparent windows, a Beckman oxygen analyzer, and a Liston-Becker gas analyzer (for carbon dioxide). A suitable arrangement of stopcocks and manometers permits addition of various gas mixtures to the system, measurement of its volume, and control of its pressure. The output signals from the CO_2 and O_2 analyzers are fed to a Leeds and Northrup 12-channel Speedomax recorder. The slopes of the O_2 and CO_2 pressure curves (which are plotted by the recorder against time), together with the measured volume of the gas system, make possible a calculation of the rate of photosynthesis of the algae in the vessel. Corrections for the solubility of carbon dioxide and oxygen in the liquid volume are, of course, necessary. The total effective volume of the gas phase is about 300 cc. The volume of algal suspension used is 90 ml in a vessel about 5 inches in diameter and 1/4 inch thick (inside dimensions). The vessel is made of clear plastic and is equipped with a cooling-water jacket.

If a calculation of the quantum efficiency of the photosynthesizing algae is desired, a "monochromatic" light is used and the incident and transmitted light intensities are measured. In order to keep the photosynthetic rate high compared to the respiratory rate and to maintain the algae in reasonably uniform illumination, it was desirable to obtain a uniform light field a little

greater in area than the vessel windows. The source consists of two spirals of 1/2-inch neon tubing about 5-1/2 inches in diameter placed one in front of the other. The light from them passes through a polished aluminum tube 5 inches in diameter and 24 inches long. An infrared absorbing glass a few inches from the end of the tube absorbs the infrared radiation. The light emerging from the end of the tube is quite uniform in intensity from one edge of the tube to the other. The end of the aluminum tube is placed in contact with the window of the algae vessel. The inside of the neon tube has a red coating which results in an emission spectrum from the tube consisting almost entirely of wave lengths between 6200 Å and 6400 Å. The largest proportion of the total light energy is at a wave length of 6300 Å, and for quanta calculations this can be assumed as the average wave length without serious error.

Incident and transmitted light intensities are measured with a bolometer. Corrections, where necessary, are made for absorption by the cell, for scattering, reflection, etc.

The apparatus has been used to measure the rates of photosynthesis as a function of CO_2 pressure and in a number of preliminary quantum yield measurements. The results obtained from the latter measurement vary tremendously with conditions of algae culture. Quantum requirements so far obtained have been as low as about 6 quanta per molecule of O_2 evolved.

4, 6-DISUBSTITUTED HEXANOIC ACIDS

Patricia Adams

In a previous quarterly report, the preparation of 6, 6, 8-tribenzylmercapto hexanoic acid was reported. Since the reduction of this compound to the desired 6, 8-dithiol hexanoic acid proved to be unsatisfactory, two alternate methods of obtaining the desired dithiol were investigated.

The reported isomerization of Δ-hydroxy acids to form γ-lactones upon treatment with heat and concentrated acid suggested that β-hydroxy acids might likewise be induced to isomerize. If such were the case, the reaction of tetrahydrofuryl acetic acid with hydrogen bromide should produce some γ-(2-bromoethyl)-γ-butyrolactone, a very useful intermediate in the synthesis of the 4, 6-dithiol.

Tertahydrofuryl acetic acid was prepared by the condensation of tetrahydrofurfuryl bromide and potassium cyanide, followed by alkaline hydrolysis. After this product had been treated with a mixture of hydrogen bromide and concentrated sulfuric acid at 100°C for several hours, 3, 6-dibromo hexanoic acid was isolated in 60%-70% yield. Essentially no neutral product was isolated.

The absence of lactone formation in this reaction may indicate a high order of stability of β-hydroxy acids (surely formed as an intermediate in the opening of the furan ring) toward the type of isomerization described for the Δ-hydroxy acids.

The desired 4, 6-dithiol hexanoic acid and its oxidation product, bisnorthioctic acid, were sucessfully prepared in the following manner. Ethyl 4-keto

hexenoate-5 (whose preparation is described in a previous quarterly report) was allowed to react with thiolacetic acid. The product of this condensation, 4-keto-6-acetylmercapto hexanoic acid, distilled at 134°-36°/0.7 mm. The ketone was reduced with sodium borohydride in methanol solution, then hydrolyzed in alkali to give 4-hydroxy-6-mercapto hexanoic acid. Treatment of this product with excess thiourea in refluxing hydriodic acid, followed by mild alkaline hydrolysis, gives crude 4, 6-dithiol hexanoic acid. Distillation of this dithiol from the crude reaction mixture resulted in isolation of some of the desired dithiol (2-5% yield from the hydroxy acid) and excessive polymerization of the distillation residue. The distillate was oxidized in dilute aqueous solution (pH 7.0) by means of a rapid stream of oxygen with ferric chloride catalyst. After chloroform extraction and recrystallization of the oily product, bisnor-thioctic acid was isolated as light yellow crystals, mp 54°-55°. The ultraviolet absorption spectrum shows the absorption peak at 3300 Å with a minimum at 2800 Å, characteristic of thioctic acid and its analogs. The molecular absorption coefficient is 140. Analysis: Calc: C, 40.4%; H, 5.65%; S, 36.0%. Found: C, 40.6%; H, 5.79%; S, 36.1%.

Additional product was isolated from the polymeric distillation residue in the following manner. The jelly-like residue was dissolved in dilute alcoholic hydrochloric acid and stirred with granular zinc. The mixture was filtered and the clear filtrate titrated with iodine to oxidize the mercapto groups obtained by the zinc reduction. The ultraviolet absorption indicated the presence of a compound containing the desired 5-member disulfide ring. Surprisingly, however, this compound was found to be insoluble in 10% sodium carbonate solution.

The oxidation mixture was subjected to a vacuum distillation and a yellow, neutral distillate was collected at 125°-35°/0.4 mm. This distillate was found to be ethyl bisor-thioctate, formed presumably by esterification during the zinc-acid reduction reaction. Normal hydrolysis techniques were unsatisfactory for treatment of this compound, since the bisnor-thioctic acid was found to be unstable to polymerization in aqueous solution when treated with heat, air, or alkali. However, hydrolysis at room temperature in very dilute sodium hydroxide under a nitrogen atmosphere for 72 hours produced a minimum amount of polymerization. The basic hydrolysis solution was extracted with chloroform to remove the white, oily polymer, and acidified. The liberated acid was extracted into chloroform solution, which was dried and distilled to dryness. Hot hexane extraction of the oily residue led the isolation of pure, crystalline bisnor-thioctic acid.

RESPIRATORY METABOLISM OF LABELED ORGANIC COMPOUNDS

Martha R. Kirk and Bert M. Tolbert

In a previous quarterly report (UCRL-2531, April 1, 1954) an instrument was described which permitted continuous measurement of breath C^{14}, total CO_2, and the ratio of the two (i.e., C^{14}/CO_2) from an animal injected with any C^{14}-labeled compound. In the most recent quarterly report (UCRL-2647, July 8, 1954) some specific results of these rate studies were reported.

Since that time several important improvements have been incorporated into the system to increase the sensitivity and reliability of the results. Because some compounds are oxidized to CO_2 very slowly, it is often desirable

to continue one experiment for a number of days. In order to keep the animal as comfortable as possible and to more nearly standardize the conditions of the experiment, a new cage has been designed. The cage itself is made of glass and jacketed. Air in the cage is kept at a constant temperature by circulating water through the jacket from a thermostated water bath. Fresh air drawn into the cage is first warmed by passing through a coil of copper tubing which is also placed in the water bath. Food and water are provided. The animal sits on a wire screen so that urine and feces may be collected from the bottom of the cage and attached bulb.

With the use of larger ionization chambers, the background caused by α-emission from the walls of the chamber becomes increasingly great. This problem has been in large measure overcome by use of a screen grid ion chamber. A cage made of stainless steel wire mesh, separated by about one centimeter from the walls and insulated from the rest of the chamber, was installed in the one-liter chamber. By putting on this cage a potential negative to the center electrode and positive to the outside wall (i.e., a negative charge of 300 volts on the outside can and 210 volts on the cage), ionization produced by α-particles or cosmic ray interaction on the walls is collected by the screen, whereas those inside the cage go, as usual, to the center electrode. The inner screen reduces the effective volume of the 1-liter chamber by 50%, but it also reduces the alpha count from about one per minute to one every ten minutes and the total background to about 20% of its value without the screen.

THE EFFECT OF SUBSTRATE CONCENTRATION ON THE $C^{14}O_2$ METABOLISM OF ACETATE IN NORMAL RATS

Ann M. Hughes and Bert M. Tolbert

In discussion of acetate metabolism in connection with our previously reported experiments on pantothenic acid-deficient animals (UCRL-2531 and earlier reports), the question is often raised whether the dosage of acetate (2 mg) is a critical factor, perhaps causing flooding of the animal's system. To answer such questions, a series of respiratory metabolic experiments has been conducted, in which about 5 μc sodium acetate-2-C^{14}, in varying total amounts of acetate (0.2 mg to 100 mg) were used. In each case the total volume of solution injected, intraperitoneally, was 0.1 cc. Male rats weighing 60-70 g were used. The apparatus for measuring $C^{14}O_2$ respiration has been previously described (UCRL-2531).

The results are shown in Figs. 5 and 6. Each curve represents the average of at least 7 animals. There is no consistent significant difference in the total excretion of $C^{14}O_2$ from 0.2, 2, or 20 mg of acetate-2-C^{14}. However, the recovery of $C^{14}O_2$ from 100 mg of acetate-2-C^{14} is markedly depressed. The shift in the time for peak rate of $C^{14}O_2$ production for the 20-mg dose may be significant, although it is felt that the increased height of the peak is not. Certainly, the rate curve for the 100-mg dose is significantly different.

These results are consistent with known figures for acetate production in rats, obtained by Bloch and Rittenberg[1] and Anker.[2] The investigators

1. K. Bloch and D. Rittenberg, J. Biol. Chem. 159, 45 (1945).
2. H. S. Anker, J. Biol. Chem. 176, 1343 (1948).

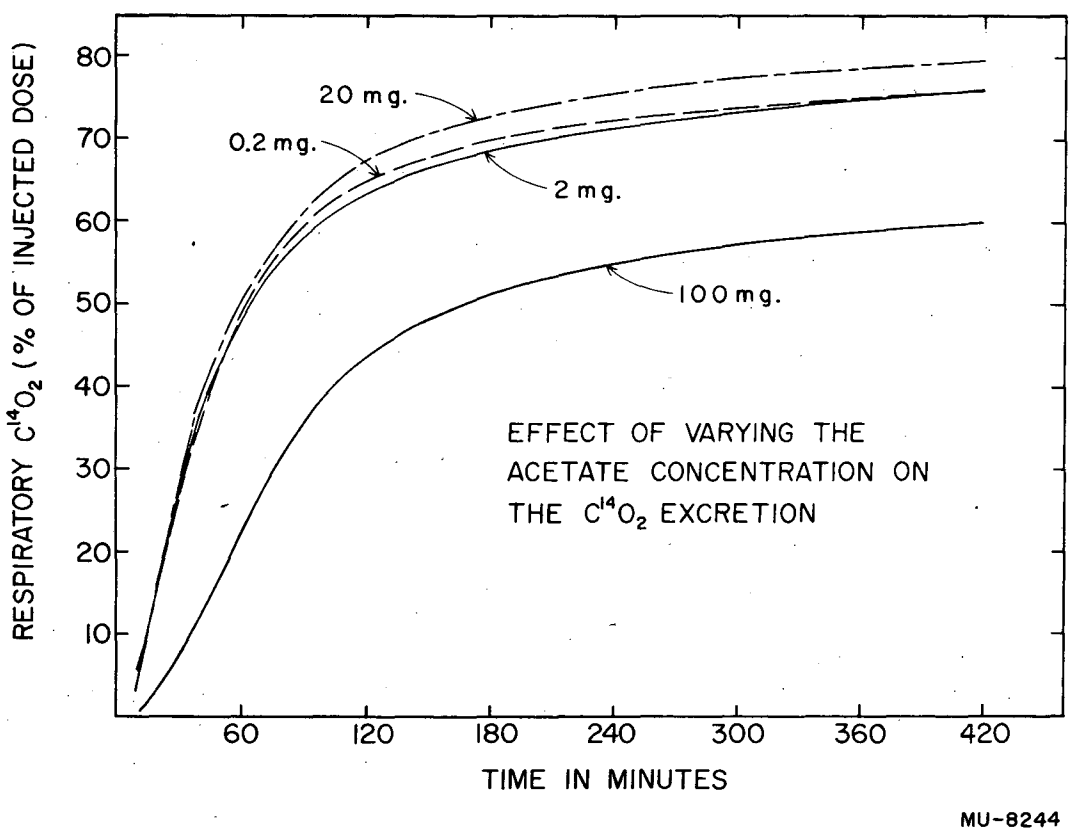
RESPIRATORY $C^{14}O_2$ (% OF INJECTED DOSE)
80
70
60
50
40
30
20
10
20 mg.
0.2 mg.
2 mg.
100 mg.
EFFECT OF VARYING THE
ACETATE CONCENTRATION ON
THE $C^{14}O_2$ EXCRETION
60
120
180
240
300
360
420
TIME IN MINUTES
MU-8244

Figure 5

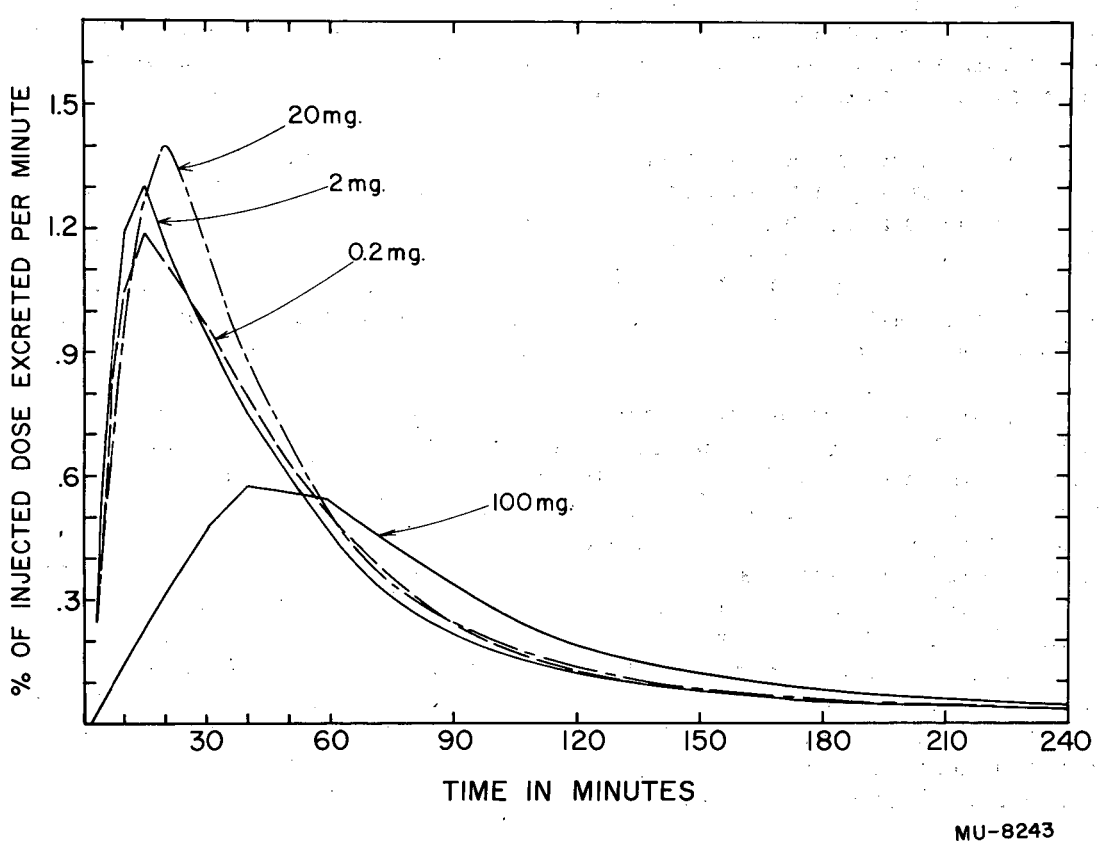
% OF INJECTED DOSE EXCRETED PER MINUTE
1.5
1.2
.9
.6
.3
20mg.
2mg.
0.2mg.
100mg.
30
60
90
120
150
180
210
240
TIME IN MINUTES
MU-8243

Figure 6

have shown that the equivalent of 1.6 to 3.2 mg sodium acetate is produced per minute per 100 g rat. Thus administration of 20 mg, to say nothing of only 2 mg, of sodium acetate should not produce any long-term flooding effect. However, the uncombined or "free" acetate pool could be quite small so that the handling of excess free acetate might be quite dependent on dose size. The above experiments indicate this is not so.

THE EFFECT OF COBALT-60 IRRADIATION ON THE RESPIRATORY METABOLISM OF CERTAIN COMPOUNDS IN MICE

Ann M. Hughes and Bert M. Tolbert

In the preceding quarterly report (UCRL-2647, July 8, 1954) experiments were described studying the effect of total body irradiation on the metabolism of sodium acetate by mice. Since that time, the study has been enlarged to include glucose and two amino acids (one essential and one nonessential).

The mice were irradiated in the same manner as in the earlier experiments, receiving a total body irradiation of 1300 rep. The metabolic experiments were started 40 hours after irradiation, using the same apparatus as described previously (UCRL-2257). The compounds tested included: glucose-C^{14}, glycine-2-C^{14}, and DL-leucine-3-C^{14}. The dose of each compound (injected intraperitoneally) was 1 mg (about 5 μc). Results are shown in Figs. 7, 8, 9, and 10. Each curve represents the average of at least 7 animals.

There is a consistent indication that amino acid utilization in the irradiated animal may be decreased, resulting in an increased conversion of the two amino acids into $C^{14}O_2$. For glycine-2-C^{14} this effect was clearly apparent. The total excretion of $C^{14}O_2$ from the labeled glycine over a 7-hour period is 20% higher in the irradiated animals than in the controls. Similarly the rate curves show an increased production of $C^{14}O_2$ over almost the entire experimental period. This effect is seen to a much lesser extent in DL-leucine-3-C^{14} metabolism. Two factors may operate here. First, the D-leucine, being nonphysiologic, may be oxidized by fixed pathways which are not greatly changed by radiation and thus obscure any effects caused in the L-leucine metabolism by irradiation. Secondly, the magnitude of the glycine effect may be enhanced by its importance as a porphyrin precursor in the blood-forming bone marrow, a known biological process easily damaged by radiation.

Although there is a depression in the early oxidation of labeled glucose to $C^{14}O_2$ in irradiated animals as compared with the control animals, the 7-hour cumulative respiration figures are almost the same. It may be that vascular damage is causing this slower uptake, while over-all energy requirements are, if anything, increased. This increase is seen in the cumulative respiration curves for all three compounds, and is the most consistent feature distinguishing the $C^{14}O_2$ excretion of the irradiated animals from the controls.

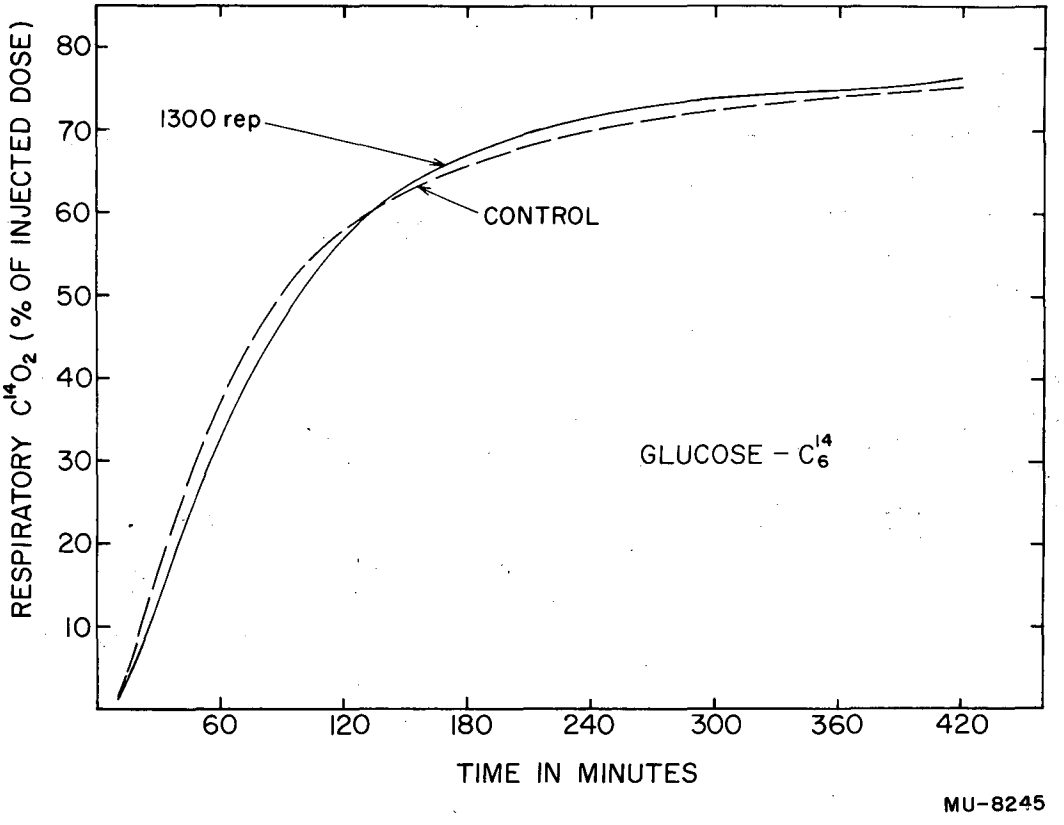
RESPIRATORY $C^{14}O_2$ (% OF INJECTED DOSE)
80
70
60
50
40
30
20
10
1300 rep
CONTROL
GLUCOSE – C_6^{14}
60
120
180
240
300
360
420
TIME IN MINUTES
MU-8245

Figure 7

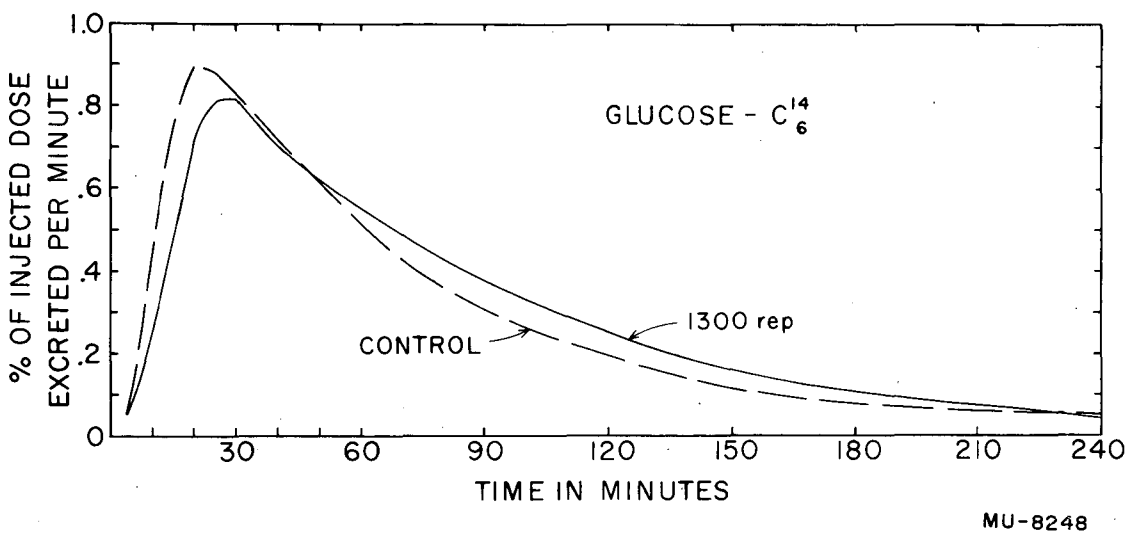
1.0
.8
.6
.4
.2
0
% OF INJECTED DOSE
EXCRETED PER MINUTE
GLUCOSE - C^{14}_{6}
1300 rep
CONTROL
30
60
90
120
150
180
210
240
TIME IN MINUTES
MU-8248

Figure 8

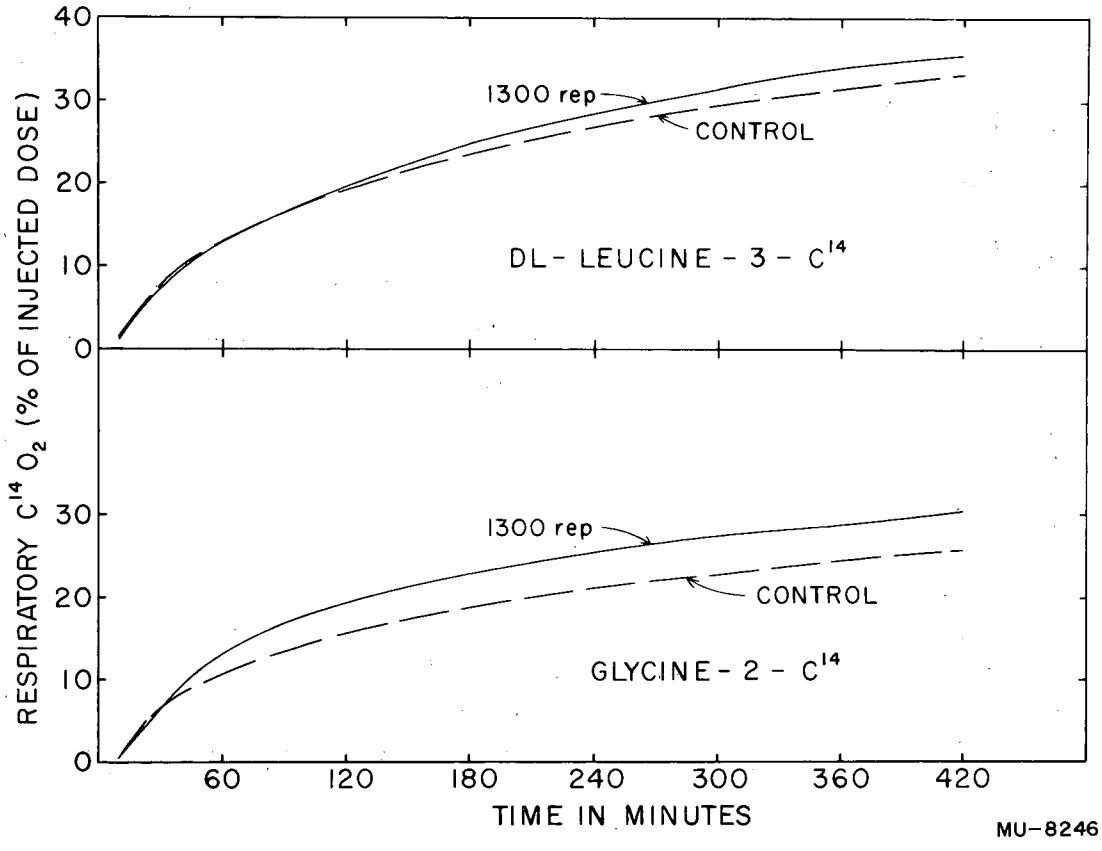
40
30
20
10
0
1300 rep
CONTROL
DL- LEUCINE - 3 - C14
RESPIRATORY C14 O2 (% OF INJECTED DOSE)
30
20
10
0
1300 rep
CONTROL
GLYCINE - 2 - C14
60
120
180
240
300
360
420
TIME IN MINUTES
MU-8246

Figure 9

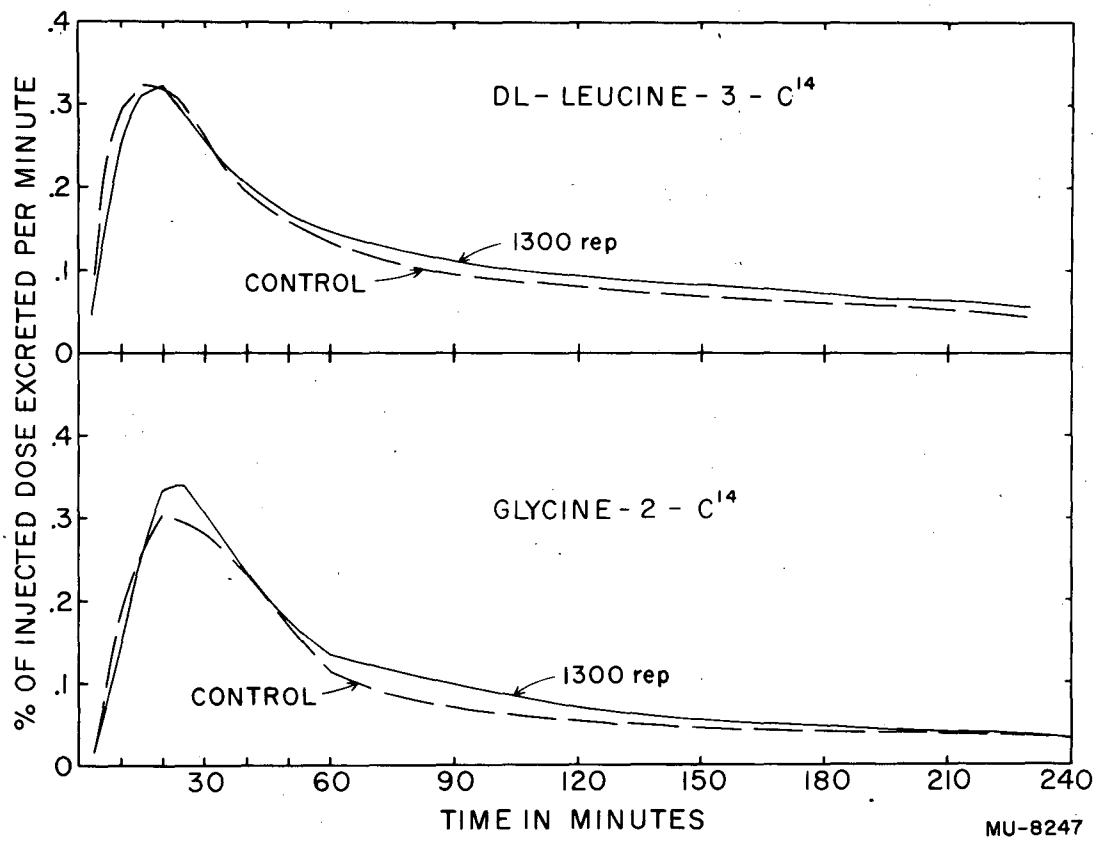
DL- LEUCINE - 3 - C14
1300 rep
CONTROL
GLYCINE - 2 - C14
1300 rep
CONTROL
% OF INJECTED DOSE EXCRETED PER MINUTE
.4
.3
.2
.1
0
30
60
90
120
150
180
210
240
TIME IN MINUTES
MU-8247

Figure 10

NUCLEAR CHEMISTRY

Glenn T. Seaborg and Isadore Perlman

THEORETICAL STUDY OF ALPHA DECAY OF SPHEROIDAL NUCLEI

John O. Rasmussen and Benjamin Segall*

Work has centered on numerical calculations of Cm^{242} alpha decay with the simple model of an alpha particle in a prolate spheroidal well. The wave equation in spheroidal coordinates was solved for the interior region, and the integration of the wave equation through the barrier will soon be attempted.

SCINTILLATION SPECTROMETER STUDY OF NEPTUNIUM-238

Don Strominger, M. P. Sweeney, John O. Rasmussen

Gamma transitions of 44, 102, 925, 939, 986, and 1030 kev have been reported previously in the beta decay of Np^{238} to Pu^{238}.[1,2,3] A gamma spectrum from a sodium iodide scintillation spectrometer shows an unresolved peak near 1 Mev made up of the 4 high-energy gamma rays, a peak near 100 kev made up of 102-kev gamma and K x-rays, and a low-energy L x-ray peak.[4] The experiment reported here was undertaken to make a careful determination of the relative intensities of the 1-Mev and 100-kev peaks.

The Np^{238} sample was prepared by thermal neutron bombardment of Np^{238} in the Livermore water boiler. Extensive chemistry similar to that reported by Magnusson, Thompson, and Seaborg[5] was used to purify the neptunium fraction from fission products and other impurities.

The gamma-ray spectrum of Np^{238} was investigated by scintillation spectroscopy using the 50-channel differential pulse-height analyzer.

The decay of the approximately 1-Mev peak (actually composed of the 4 highest-energy gamma rays) was followed for more than 5 half lives, and was found to decay with a half life of 2.04 days. This value is in excellent agreement with the 2.10-day half life previously reported by Freedman et al.[1]

The decay of the 100-kev region (composed of plutonium K x-rays and the gamma ray of 102 kev) was complex. This can be explained by the presence

---

* UCRL Theoretical Physics Group.

1. M. S. Freedman, A. H. Jaffey, and F. Wagner, Jr., Phys. Rev. 79, 410 (1950).
2. J. W. Mihelich, Phys. Rev. 87, 646 (1952).
3. H. Slätis, J. O. Rasmussen, Jr., and H. Atterling, Phys. Rev. 93, 646 (1953).
4. Åström, Slätis, unpublished results.
5. Magnusson, Thompson, and Seaborg, Phys. Rev. 78, 363 (1950).

of a considerable quantity of Np^{237} and the growth of Pa^{233} into the sample.

Corrections were made for the contributions of the Np^{237} and Pa^{233} and, in addition, for the different sodium iodide crystal efficiencies. As a result, it was determined that the unconverted gamma and K x-rays of the 100-kev region have a total intensity of about 4 percent of the total number of unconverted gamma transitions in the 1000-kev region.

More than half the observed 100-kev radiation can be accounted for as K x-rays accompanying K conversion of the high-energy gamma rays plus the 102-kev nuclear gamma radiation. Thus, we can from this experiment set an upper limit on possible K capture of Np^{238}, namely that it must be less than 1 percent of the beta transition rate. This experiment provides no evidence that detectable K capture takes place, as the small excess of 100-kev radiation may well have been due to fluorescence radiation from the Np^{237} material in the sample.

GAMMA-RAY IRRADIATION OF DI-ISOPROPYL ETHER

Amos S. Newton, Bobby Mohler, and Herbert DiGrazia

Gamma-ray irradiations of isopropyl ether have given different ratios of products than helium-ion or electron irradiations. For short bombardments the yields of products from gamma rays are independent of bombardment time. The results are shown in Table I in terms of millimoles of product per hour. A calibration of the source needed to calculate G values has not been made because of the limited time available on the source. At present the ratios of the products formed are of prime interest. The electron bombardment done with the UCRL microwave accelerator is also deficient in that no provision was made for measurement of the absolute beam intensity. The relative yields of the three types of bombardment are given in Table I. The comparative yield figures have been normalized to a yield of hydrogen of 100 in each case.

It is seen that electrons and helium ions are very similar except that about twice as much of the C_3 and C_4 hydrocarbons are formed with electrons. The propane-propylene ratio is about the same in each case. With gamma rays comparatively more methane and <u>less</u> ethane is formed and the yield of propane is greater than the yield of propylene.

No explanation of these differences is presented at this time and work is continuing on the problem, especially in an effort to get absolute G values for the gamma-ray and electron runs.

Table I

Gamma-ray Yield in Millimoles/hour[a]					Comparative Yields		
Component	1.5 hours	3 hours	6 hours	12.5 hours	γ-rays H_2=100	Electrons H_2=100	Helium ions H_2=100
H_2	0.0087	0.0095	0.0090	0.0085	100	100	100
CO	0.00034?	0.00019	0.00018	0.00018	2.02	2.01	3.8
CH_4	0.0058	0.0061	0.0055	0.0060	65.6	41.43	38.4
C_2H_4	0.00023	0.00029	0.00020	0.00015	2.02	1.5	1.4
C_2H_6	0.00028	0.00026	0.00024	0.00025	2.91	7.17	7.03
C_3H_4	0.00006	0.00009	0.00006	0.00006	0.8	0.8	0.6?
C_3H_6	0.0073	0.0080	0.0074	0.0071	83.5	85.6	45.4
C_3H_8	0.0084	0.0096	0.0101	0.0091	104.2	30.6	19.2
i-C_4H_8	0.0008	0.0007	0.0005	0.0005	0.7	0.6	0.3
i-C_4H_{10}	0.00073	0.00080	0.00076	0.00076	8.5	17.9	6.2[b]
				Total	370.2	287.6	222.3

[a] Gamma-ray intensity about 10^5 r/hr.; Vol. ether = 50 ml.

[b] Possibly low.

DEGASSING LIQUIDS

Amos S. Newton

Experiments on short gamma-ray bombardments of organic liquids have shown that ordinary methods of degassing such liquids do not remove the last trace of dissolved gas. Methods that had been tried were: (1) Pumping on the liquid cooled to dry-ice temperature; (2) Distillation of 1/3 of the liquid under vacuum at room temperature; and (3) Distillation of the liquid from one trap to another under vacuum.

Therefore a method of degassing has been adopted wherein the liquid is refluxed under vacuum with a condenser temperature such that the vapor pressure of the liquid is less than 1 mm Hg. This method is limited, of course, to those liquids which have low vapor pressures at their freezing points. The condenser used consisted of a 15 mm tube sealed through a 1-pint Dewar flask. The Dewar can then be filled with a dry ice-trichlorethylene bath or any slush bath giving a suitable temperature for the liquid in question. For example, for diethyl ether, a carbon disulfide slush bath (mp = -110°C) has been used with success. This technique has proven successful in removing all air from ethers and alcohols.

The same method can be used for recovery of the gases produced in the irradiation, using a Toepler pump for collecting the gases. A trial of the method has been made with 40 ml of di-isopropyl ether to which a mixture of propane, propylene, isobutane, and isobutylene was added by vacuum transfer. The results are shown in Table II. They illustrate the complete recovery possible. Analyses of the initial and recovered gases were done with the mass spectrometer.

Table II

Recovery of Gases from Di-isopropyl Ether

Component	Millimoles added	Millimoles recovered	ΔMillimoles
C_3H_6	0.0482	0.0485	+ 0.0003
C_3H_8	0.0320	0.0323	+ 0.0003
$i\text{-}C_4H_8$	0.0309	0.0296	- 0.0013
$i\text{-}C_4H_{10}$	0.0149	0.0156	+ 0.0007
Total	0.1260	0.1260	

EQUILIBRIUM MEASUREMENTS ON RARE EARTH FLUORIDES

William P. Bryan

Work has been started on attempts to measure the equilibrium pressures of various metallic fluorides. In particular it was desired to measure the equilibrium pressures for the fluorides of cerium and terbium. The chemical equilibria in question are

$$2\ CeF_{4(s)} = 2\ CeF_{3(s)} + F_{2(g)}, \tag{1}$$

$$2\ TbF_{4(s)} = 2\ TbF_{3(s)} + F_{2(g)}. \tag{2}$$

In preliminary experiments cobalt fluoride was used to test the apparatus. Here the reaction is

$$2\ CoF_{3(s)} = 2CoF_{2(s)} + F_{2(g)}. \tag{3}$$

The reason for such measurements is that cerium and terbium should show a difference in the values of ΔS for the above reactions corresponding to the values of J, the total angular momentum vector for the metallic ions. These J values are

$$Ce^{+3},\ J = 5/2\ ;\quad Ce^{+4},\ J = 0;$$

$$Tb^{+3},\ J = 6\ ;\quad Tb^{+4},\ J = 7/2.$$

For cerium, ΔS should have a contribution of $R\ln[2(5/2)+1] - R\ln 1$ due to the J values, while for terbium the contribution should be $R\ln[2(6)+1] - R\ln[2(7/2)+1]$.

It is hoped that by measuring values of the equilibrium pressures and thus of ΔF's for the above reactions and obtaining values of ΔH by the usual thermodynamic methods, we can obtain values of ΔS; and the magnetic entropy effect can be compared with that calculated from the J values.

The method adopted for the pressure measurements was the Knudsen effusion method. A crucible with an effusion orifice is packed with the higher fluoride and heated to the desired temperature. When equilibrium is attained within the effusion crucible, the pressure of the effusing species can be calculated from the loss in weight of the crucible over a given period. The relationship is

$$p = \frac{N\sqrt{2\pi MRT}}{60\,a\,t}, \tag{4}$$

where a = area of effusion orifice in sq. cm., t = time in minutes, M = molecular weight of effusing species, N = no. of moles effusing, and p = the pressure of the effusing species.

In preliminary measurements a large-scale nickel effusion crucible was used. The crucible, charged with some crude CoF_3, was put into a tube connected to high vacuum, and heated with an insulated electric heater. The crucible was removed at intervals and weighed on a balance.

Results using this method were very poor and not of sufficient accuracy to warrant any calculations of values of p. The major difficulties were: lack of constant temperature in heater, lags in the heating of the crucible to the desired temperature, not enough accuracy in the weighing technique, and the necessity of removing the crucible for each weighing.

The results obtained on the crude CoF_3 indicated that the sample was hygroscopic and contained 2% to 3% of water when the crucible was loaded in a dry box. The equilibrium pressure of F_2 seems to be appreciable in the region 350°-450°C.

In order to overcome the difficulties of the previous experiments, a new effusion apparatus was constructed. The effusion crucible is made of nickel foil and weighs ~160 mg. Special copper electrodes were designed to spot-weld the foil together. The crucible is hung from a quartz-fibre cantilever balance by means of a fine copper wire. The fibre has a diameter of ~600μ and a length of ~24 cm. A prism-window arrangement permits the position of a pointer on the fibre to be read with a microscope. The crucible and balance are both under high vacuum.

The crucible hangs down into a heating apparatus consisting of an electric heater that can be used to reflux various subtances around the crucible tube. The crucible thus attains constant temperature. A platinum—platinum-rhodium thermocouple is used to measure the reflux temperature.

The balance and heater are mounted on a table separated from the rack upon which high-vacuum pumps are mounted. This eliminates vibrations of the balance pointer. A cooling-water condenser jacket separates the balance from the heater in order to minimize the effect of heat on the quartz fibre. A blower can also be used to dissipate this heat.

At present experiments are being conducted with the empty crucible hanging from the balance, in order to test the stability of the apparatus during heating.

ISOMERIC STATE OF YTTRIUM-88 IN THE DECAY OF ZIRCONIUM-88

Earl K. Hyde and M. G. Florence

Zirconium-88 had previously been studied by Hyde and O'Kelley,[1,2] who had found an electron-capturing activity of 85-day half life. A single gamma ray of 405-kev energy accompanied the decay. Recently this nuclide was restudied. On a sodium iodide spectrometer the gamma-ray energy was redetermined as 395 ± 5 kev. Gamma-gamma coincidence studies between this

1. E. K. Hyde and G. D. O'Kelley, Phys. Rev. 82, 944 (1951).
2. E. K. Hyde, Phys. Rev. 92, 927 (1953).

gamma ray and the 15-kev x-rays from the electron capture process indicated the presence of the metastable state Y^{88m}. A preliminary determination of the half life of the transition

$$Y^{88m} \xrightarrow{395\ \text{kev}} Y^{88}$$

indicates a value of 0.34 ± 0.05 millisecond. From Goldhaber and Sunyar's curves[3] it can be concluded that this transition is electric or magnetic octupole in nature.

The existence of the metastable state was suspected from the fact that the three odd-odd nuclides Tc^{92}, Nb^{90}, and Rb^{86} exist in isomeric forms. Y^{88} resembles these nuclides in possessing 49 neutrons.

The experiments on which the above result is based are the following. Zr^{88} was prepared by bombarding niobium foil in the 184-inch cyclotron with 100-Mev protons, and isolated in carrier-free form from the target two months after bombardment when all contaminating shorter-lived zirconium activities had decayed. The gamma-gamma coincidence measurement was done by standard techniques described before.

The half-life measurement of 0.34 ± 0.05 millisecond was made by an electronic delayed coincidence technique.

Gamma radiation from a weak sample of Zr^{88} (count rate, approximately 50cpm) was detected by a sodium iodide crystal. Fifteen-kev x-irradiation was selected by a single-channel pulse-height analyzer, and the output of the analyzer was fed to the trigger input of a Tektronix 514 D oscilloscope to start a trace across the oscilloscope face. A second sodium iodide crystal was simultaneously detecting gamma radiation from the Zr^{88} sample. After amplification, these signals were fed to the vertical deflecting system of the oscilloscope. Signal pulses arriving in prompt coincidence with the 15-kev x-ray trigger pulses were displayed as dots at the start of the trace. The energy of the gamma radiation was proportional to the amount of vertical deflection on the face of the cathode-ray tube. Any delayed gamma-ray signal pulses or randomly occurring chance pulses that arrived during the time it took the trace to traverse the oscilloscope face appeared as dots at a corresponding distance from the start of the trace.

A Polaroid Land camera was used to take 4- to 10-minute exposures of the scope face. A finished photograph showed a horizontal band of dots at a vertical height corresponding to 395 kev, and this band had a significant decrease in density from right to left when the trace sweep speed was set at 100 microseconds per cm.

The density of the dots in the 395-kev band was plotted on the log scale of semilog graph paper versus the distance (time) from the beginning of the traces. Analysis of a number of photographs gave a value of 0.34 ± 0.05 millisecond for the half-life of Y^{88m}.

---

3. M. Goldhaber and A. W. Sunyar, Phys. Rev. 83, 906 (1951).

The Tektronix oscilloscope mentioned above was modified to eliminate halation from the base line by feeding the positive signal pulse simultaneously to the vertical deflection system and to an inverter circuit which inverted and amplified the pulse. The resulting negative pulse was fed to the cathode input post on the oscilloscope to unblank the trace at the instant a signal appeared on the vertical amplifier. All electronic arrangements were handled by A. E. Larsh and F. S. Stephens.

NEPTUNIUM-240 AND NEPTUNIUM-241

Richard Lessler and Maynard C. Michel

The one-hour neptunium activity previously reported has been mass-separated in the time-of-flight separator. Two separate bombardments were made to produce the one-hour and the 15-minute activities, and mass separations were made on each, with collection full time at mass 240 and mass 241 respectively.

The first bombardment yielded (at mass 240) two decay periods, of one hour and 8.7 hours. The second bombardment, in which the time for chemical separation was reduced from 45 to 25 minutes, gave two periods (at mass 241) of 16 minutes and 3.3 hours.

Since the one-hour activity that is known to be neptunium is found only at mass 240, this isotope has been definitely assigned. A close search of decay curves previously run on chemically separated neptunium shows no evidence of any half life between 1-hour and 2-day Np^{239}. Careful resolution of these curves gave 63 ± 1 minutes as the best value for the half life of Np^{240}.

On the Np^{241} mass-separated plate, the 16-minute activity is almost certainly the Np^{241} previously reported, while the 3.3-hour activity remains unexplained along with the 8.7-hour activity at mass 240. The possibility of further isomerism at both positions is very unlikely, especially in view of the fact that no half lives of this order were seen in previous bombardments. Very likely these two periods are due to easily ionized fission products, which are collected on harmonics in the separator. This still requires some unusual coincidences to occur in the chemical separation, but seems the most likely explanation. Further bombardments are planned, with a little more thorough decontamination from fission products. The probability previously proposed that Np^{241} also has a 1-hour half life now seems quite remote, although it is not ruled out by this work. Both TTA extraction and anion-column separation had been used previously, and in each case the 16-minute activity followed the neptunium fraction.

The 16-minute activity has been examined on the 50-channel sodium iodide scintillation spectrometer. Because of relatively large amounts of Np^{240} and Np^{239} present, only tentative results could be obtained. These indicate that gamma rays of 130, 180, and 280 kev are due to the short-lived neptunium. Large peaks at about 60 kev and 95 kev are interpreted as lead x-rays (from the chamber) and neptunium x-rays, respectively. It appears possible that other gamma rays also are associated with this decay, but in too low abundance to be assigned definitely.

HIGHER OXIDATION STATES OF ACTINIDES

Burris B. Cunningham and James C. Wallmann

Tracer experiments have been carried out in an attempt to observe oxidation states higher than +3 for elements 98 and 99. A nonaqueous system was chosen, as it was anticipated that the CfIII—IV couple would be unstable in aqueous solution.

A melt of two parts KOH and one part $NaNO_3$ was used to dissolve the rare earth sesquioxides and leave the dioxides as a precipitate. Praseodymium dioxide was the carrier for the precipitated fraction with lanthanum, samarium, or gadolinium the rare earth +3 holdback carriers used. If the oxide (crystal) system is nonselective for III or IV ions of about the same ionic radius, tripositive and tetrapositive ions will appear in the crystal precipitate in the same proportions as in the melt, whereas if the oxide is composed mainly of tetrapositive ions then oxidized tracer will appear in the precipitate.

The experimental data indicated that the crystal is partially selective toward III and IV ions, and thus the results indicating possible oxidation of elements 98 and 99 were inconclusive and investigation must be carried further. It was found, however, that tracer curium behaved like americium, hence a higher oxidation state (or states) is indicated.

Experiments with microgram quantities of curium will be performed to define the oxidation more carefully. The tracer experiments will be continued when new quantities of transcurium elements become available. Special emphasis will be given to determination of the composition of the melt and precipitate, and experiments to detect reduction to the +2 state will be performed.

THE COMPOSITION OF CURIUM OXIDE

Burris B. Cunningham and James C. Wallmann

Experiments have been carried on over the past several years, at this and other laboratories, in an attempt to determine the composition of the oxide of curium. Only very poor x-ray diffraction patterns of the oxide have been obtained as long as the isotope Cm^{242} (α, 162 d) was the only curium isotope available; destruction of the oxide lattice, owing to alpha-particle bombardment, occurred within one to two hours. Recently samples of curium with greater than 90 atom % Cm^{244} (α, 19 y) have become available, and oxides prepared with this curium have yielded x-ray diffraction patterns indicating the formation of an oxide of curium having an oxygen content greater than that in Cm_2O_3.[1] This oxide has been assigned the composition CmO_2 on the basis of (1) the observed lattice constant related to the lattice constant predicted for Cm^{+4} by extrapolation from other actinide dioxides, and (2) the preparation of identical oxides by ignition in either oxygen or ozone. No direct evidence for the dioxide composition has been obtained.

1. L. B. Asprey (Los Alamos Scientific Laboratory), private communication.

We have begun experiments to determine the oxide composition accurately by means of correlated magnetic-susceptibility and change-of-mass measurements. The Faraday-type magnetic-susceptibility apparatus consists of a vacuum-tight metal case enclosing a quartz-fiber elastic system with vertical torsion suspension. A permanent magnet, with pole pieces ground to provide an inhomogeneous field, moves on a cradle beneath the metal case and imparts to the sample a force in the horizontal plane. A torsion wheel, also in the horizontal plane, restores the balance to a null position observed with a suitable optical system. Mapping of the inhomogeneous field and calibration of the apparatus with standard ferrous ammonium sulfate have been completed.

A Kirk-Craig-Gullberg-Boyer type of quartz-fiber torsion microbalance has been constructed and calibrated for use in the mass determinations. The balance in operation has a sensitivity of 14 $\mu g/360^{\circ}$ and a sensibility of 7×10^{-9} g.

The magnetic susceptibilities of Cm^{+3} and Am^{+3} (presumably isoelectronic with Cm^{+4}) have been measured previously at this laboratory;[2] these data are the basis of the preliminary experiments run by the following procedure: a curium solution of known purity was ignited on a weighed quartz rod of previously determined magnetic susceptibility. This ignited sample was weighed and the magnetic susceptibility was measured. The material was then subjected to alternate reduction and oxidation and the resulting magnetic susceptibility and mass changes were measured. To date the experiments, having been made with curium containing 1% impurities and with < 10 μg curium per determination, have been inconclusive. With larger and purer samples, however, the results should be unambiguous and should clearly identify the curium oxide species involved. The possibility that Cm^{242} oxide exists only as the sesquioxide, the fluorite-structure-stabilized dioxide slowly evolving oxygen owing to lattice destruction, will be investigated.

PREPARATION OF RARE EARTH AND ACTINIDE METALS

Burris B. Cunningham and James C. Wallmann

Experiments have been continued on the two problems of producing submilligram quantities of high-purity rare earth and actinide metals and of producing submicrogram quantities of these same metals. The beryllia double-crucible technique[3,4] has been used to prepare metal samples for calorimetric measurements[5,6]. The same technique, however, probably does not produce metal free enough from a surface oxide film to be suitable for vapor pressure measurements that are extremely sensitive to the presence of oxygen.[7] For this reason the technique has been modified so that a tantalum system is used.

---

2. W. T. Crane, J. C. Wallmann, and B. B. Cunningham, The Magnetic Susceptibilities of Some Compounds of Americium and Curium, University of California, Radiation Laboratory, Report No. UCRL-846, August 1, 1950.
3. Fried and Davidson, J. Am. Chem. Soc. 70, 3539 (1948).
4. Westrum and Eyring, ibid 73, 3396 (1951).
5. Lohr and Cunningham, ibid 73, 2025 (1951).
6. Westrum and Eyring, ibid 74, 2045 (1952).
7. Rauh and Thorn, A.N.L. 5203, January 8, 1954.

The reductant metal is placed in the base of a tantalum holder and the trifluoride is loaded in a tantalum cup at the top of the holder; the holder is then contained inside a tantalum crucible which is capped with either a thoria or tantalum plug. Two dozen runs with lanthanum and americium indicate that the tantalum system yields a more easily volatilized product than do the beryllia double crucibles; the temperature range over which metal can be successfully produced is much smaller than that observed previously, since at the higher temperatures the product volatilizes out of the crucible and is found as a film on the walls of the vacuum envelope. Metal that is recovered in the tantalum holder should be suitable for vapor pressure measurements.

Refractory-oxide double-crucible systems have also proven to be generally unsatisfactory for submicrogram scale work, despite early success with curium.[8] The crucible dimensions are so great compared with the size of a submicrogram piece of metal that physical separation of the metal from the crucible is difficult. A tantalum holder, with 0.2 mm. diameter dimple coated with a thin film of thoria, has been used successfully inside a tantalum outer crucible to produce lanthanum in quantities 0.01 to 1 μg. This technique will now be applied to actinide metals.

NUCLEAR QUADRUPOLE RESONANCE

Gilbert O. Brink

A spectrometer covering the range of 20-100 Mc has been completed and used for the observation of several resonances. A block diagram is given below.

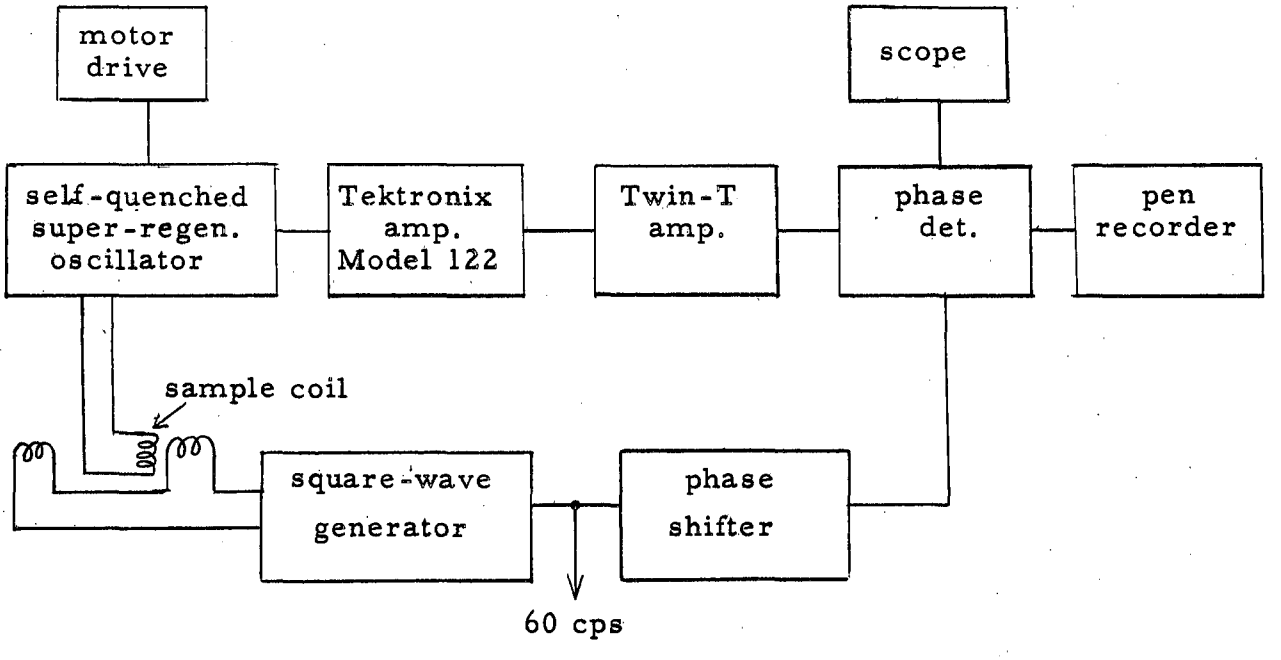

8. Wallmann, Crane, and Cunningham, J. Am. Chem. Soc. 73, 493 (1951).

An on-off type square-wave magnetic field was used to modulate the resonance and this 60 cps modulation, after being amplified by the Twin-T amplifier, was detected by the phase detector and recorded. The biggest objection to this method is that some of the square-wave voltage is induced in the sample coil and cannot be separated from the desired signal because both are of the same frequency. A better method would be to detect the record harmonic of the quench frequency by supplying the phase detector with a 120 cps reference signal. This was done in a modification of the apparatus, which will be described later.

The first resonance observed with this equipment was the chlorine resonance in chlorobenzene at the temperature of liquid nitrogen. Only the Cl^{35} line at 35 Mc was observed. This line was very strong, and served as a reference line for the adjustment of the equipment. The sample was about 2 ml of c.p. chlorobenzene. The Cl^{37} resonance was observed in chloroform at 77°K using the same size sample.

The chlorine resonance in sodium chlorate at room temperature was observed next. Only the Cl^{35} line, which appears at 29.92 Mc, was observed. The line was weaker than the line in chlorobenzene, partially because of the higher temperature. The main line and six of the side bands were recorded with very good resolution. With a one-second time constant in the output of the phase detector, an almost noise-free recording was obtained with the resonance line going almost full scale.

The Sb^{121} resonance in $SbCl_3$ was observed at 77°K at 59.7 Mc. This was the first case where the separate side bands of the oscillator were not observable, owing to the broadness of the resonance.

A search was conducted for the La^{139} resonance in La_2O_3 in the range 20 to 50 Mc without success. The equipment was allowed to sweep by itself, and it is not certain whether the negative results were because no resonance was present or because the sensitivity of the equipment dropped off during the sweep.

The resonances of both stable isotopes of copper were observed in Cu_2O at room temperature. The Cu^{63} resonance was at approximately 26 Mc and the Cu^{65} at 24 Mc. These resonances are broad, and it was not possible to resolve the separate side bands with this equipment. All the above-mentioned resonances, with the exception of La^{139}, have been observed previously by other workers and have been reported in the literature. The copper resonances have been observed in CuO both at room temperature and at 77°K. These lines have not been reported in the literature. The lines are broad and were not resolved from the side bands.

Much attention has been devoted to finding a satisfactory method for measuring the frequency of the lines accurately. The problem is to decide which is the center line and which are side bands. Unfortunately, the center line is not always the strongest in a self-quenched detector. If the detector is externally quenched the center line can be found by changing the quench frequency, which will change the position of the side bands but not of the center line. This cannot be done as easily in a self-quenched circuit. Alternate side bands are of opposite polarity, however, and this can be used to determine the center line in most cases.

This method was used to measure the frequencies of the copper lines in CuO. An accurate measurement was not possible, owing to the lack of resolution of the side bands. However, by comparing corresponding points on the resonances of Cu^{63} and Cu^{65}, it was possible to obtain reasonably good values of the ratio of the quadrupole moments. The following table gives the results.

	299°K	77°K
$\nu_{Cu^{63}}$	26.01 Mc	26.72 Mc
$\nu_{Cu^{65}}$	24.07 Mc	24.73 Mc
$\frac{Q_{Cu^{63}}}{Q_{Cu^{65}}}$	1.0804	1.0806

The value of $\frac{Q_{Cu^{63}}}{Q_{Cu^{65}}}$ as calculated from the data given by Krüger[1] is 1.0806.

Because of the lack of resolution of this equipment it was decided to modify it to see if better resolution could be obtained. It was decided to go to capacitive frequency modulation with detection of the second harmonic. It was also decided to raise the modulation frequency to get away from 60-cycle pickup by the electronic equipment. A block diagram of the modified equipment is shown below.

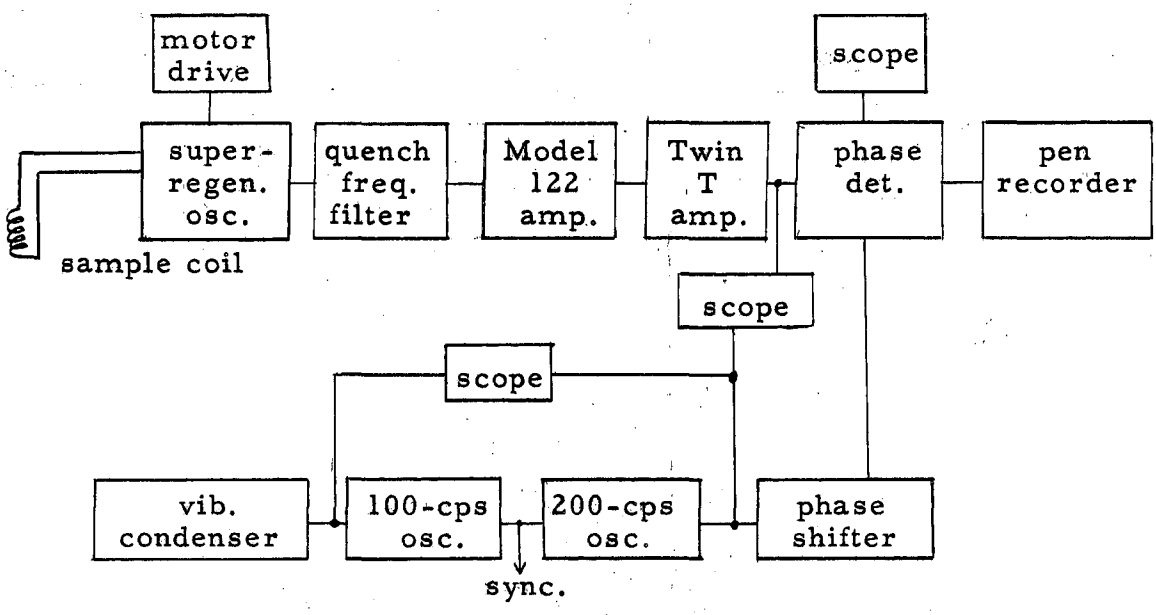

1. H. Krüger and U. Meyer, Berkhout, Z. Physik. 132, 171 (1952).

Following a suggestion by H. P. Robinson, it was found possible to synchronize two sine-wave audio oscillators by injecting some signal from one into the cathode of the other. They were found to lock together easily and to hold the same phase relationship for long periods of time without adjustment. This proved to be the easiest way to get a reference signal at twice the modulation frequency. With this equipment it was possible to easily resolve the separate side bands of the copper resonance.

A single crystal of sodium chlorate has been grown, and the Zeeman effect has been observed on the Cl^{35} resonance. The splitting was quite pronounced but no frequency measurements have been made yet.

DOUBLE-RETARDING-FIELD ELECTROSTATIC BETA-RAY SPECTROMETER

Herbert R. Johnston

General

In the last quarter, the construction and assembly of the DRF Beta-Ray Spectrometer was completed. The spectrometer was assembled with an artificial source of beta rays (a hot filament) in place of the radioactive sample holder. All internal and external wiring to associated equipment has been finished. The system has been tested for vacuum leaks, and a vacuum of 5×10^{-6} mm Hg can be easily maintained. Preliminary tests on the complete system are under way.

Noise

Preliminary tests indicate that the elimination of noise of all kinds will be a major factor in the successful operation of the system. One source of noise is power line disturbances. This type of noise can be minimized but not entirely eliminated by careful grounding procedures and by line filters.

By means of a recorder (traffic counter), measurements of relative noise during week days, week nights, and week ends have been made with the idea of finding a time of relatively low noise level for the purpose of taking measurements in the actual operation of the device.

OPTICAL SPECTROSCOPY

John F. Conway and Ralph D. McLaughlin

Nuclear Spin of Np^{239}

A sample of uranium depleted in U^{235} was irradiated in the Arco pile to produce Np^{239}. The neptunium was separated from the uranium by a TTA extraction.

The spectrum was photographed on a 21-foot Paschen-Runge mount with a 30,000-lines-per-inch grating. Professor F. A. Jenkins of the Physics Department of the University kindly made this instrument available to us. Comparison spectra of Np^{237} and iron were also photographed.

A radiochemical assay by Dr. Gary Higgins verified the amount of Np^{239}.

The hyperfine pattern of Np^{239} has two lines and thus a spin of $I = 1/2\,(h/2\pi)$.

The ratio of the widths of the patterns for the neptunium line at 3995.5 is 1 to 6.9 for Np^{239} to Np^{237}.

Plutonium Zeeman spectrum

The Zeeman spectrum of plutonium has been photographed several times on a 21-foot 30,000-lines-per-inch grating in a Wadsworth mount. The wavelength range covered is from 3200 to 4500 Å.

Many of the plutonium lines show well-resolved and simple Zeeman patterns.

This work is now being extended to cover to 7100 Å using a 15,000-lines-per-inch grating.

MASS SPECTROSCOPY

Maynard C. Michel

The time-of-flight isotope separator was used to assign a mass number to the Ba^{126}-Cs^{126} chain formed in nitrogen bombardment of indium by Hollander and Kalkstein. The results have been reported elsewhere, but the method is a little unusual in that it involves a chemical separation inside the isotope separator, and deserves some mention here.

When using a thermal ion source for mass spectroscopy we find not only that different elements vary widely in the efficiency of ionization, but also that the temperatures at which ions are formed differ for the various elements. In this case the Ba^{126} parent has a half life of ~ 1 hour, which keeps the 1.5-minute Cs^{126} in equilibrium. Also, cesium is more efficient than barium and ionizes at a much lower temperature. Since there were only 10^4 to 10^5 counts per minute of activity available, it was desired to assign the more efficient cesium. It was found possible to mount the Ba-Cs equilibrium mixture on the filament and flash it at a temperature that would ionize some or most of the cesium but not disturb the barium. Then when the system was quickly let down to air the mass-separated Cs^{126} could be recovered and its decay followed. In this way, four different separations were performed on a single sample of the equilibrium mixture.

More recently, work by A. W. Searcy and R. D. Freeman on the effusion and vapor pressure of silver vapor has indicated a molecular weight for silver of about two times the atomic weight. For this investigation silver metal in the temperature range above its melting point and below 1500°C was run in the 12-inch-radius, 60°, high-resolution mass spectrometer made available to us by Dr. George Barton, of the Livermore laboratory. Under bombardment by electrons of 12-45 v. energy the predominant ion is Ag^+, with a dimer present in varying abundance of the order of 1 part in 35,000 of the monomer. Direct thermal ionization of the silver, however, gives an

ion spectrum containing the ions Ag^+, Ag_2^+, Ag_3^+, and Ag_4^+ in approximate abundances 15:7:30:1 respectively.

The higher polymers are less abundant at high temperatures and are easily dissociated by electron bombardment, indicating a low stability. There is as yet no good way to deduce the absolute abundances of the neutral polymers from these data, but it would seem that any discrimination in thermal ionization would very likely favor the species of lower molecular weight, since the bond energies are probably less than the ionization potentials in the case of the heavier polymers. If this is true, it marks a distinct disagreement with the results of Gerlach and Stern[1] in the atomic-beam experiment and with the work of Stern[2] on the vapor velocities.

More work is in progress on this subject, as well as a survey of polymers in other elements.

In this connection, a sample of NdF_3 was examined to determine if any molecules exist with more than one neodymium present. To within one part in 1000 no polymeric species were seen that had been produced either by electron bombardment or by thermal ionization. The parent species, NdF_3^+, was observed to be in extremely low abundance compared with NdF_2^+, NdF^+, and Nd^+ ions.

Recently, in cooperation with Mr. James Kain and Professor Leo Brewer, the vapor state of arsenic has been examined and found to form the ions As^+, As_2^+, As_3^+, As_4^+ in roughly equal amounts under electron bombardment at energies up to 45 v, indicating a rather high stability for these polymers. This was done at about 250°–300°C under nonequilibrium conditions. The molecule As_3P^+ was seen (presumably from phosphorus impurity in the arsenic used), indicating that phosphorus will also exist in higher polymers, as is expected from the solid-state structure. Further work on equilibrium vapor composition and ionization potentials is in progress.

1. W. Gerlach and O. Stern, Z. Physik 9, 349 (1922).
2. O. Stern, Z. Physik. 3, 417 (1920).

CHEMICAL ENGINEERING (PROCESS CHEMISTRY)

NOTES ON WORK IN PROGRESS

Thermal Diffusion in Liquids — J. E. Powers, C. R. Wilke

This work has been completed and published in UCRL-2618.

Capacity of Perforated-Plate Liquid-Vapor Contacting Columns

C. D. Hunt, D. N. Hanson and C. R. Wilke

Results are to be published shortly.

Gas-Phase Mass Transfer Studies — E. J. Lynch, Loren Hov and C. R. Wilke

(a) Studies of sublimation of naphthalene cylinders into air, helium, and Freon 12 have been completed. Apparatus was modified to make air runs at 3 atmos pressure. Results are now being studied for general correlation. Further equipment modifications are planned for work at 50 atmos.

(b) Psychrometric studies using calibrated thermometers for the wet and dry bulbs as per the last report have covered the range of film-pressure factor from 0.96 to 0.27. In order to permit work at lower film-pressure factors a new thermostated sampling system has been designed and is being constructed.

Vacuum Flow through Annular Sections — Walter Dong, D. N. Hanson

Experimental work on vacuum flow between parallel copper plates is essentially completed. Theoretical analysis of the results is in progress.

Thermal Conductivity of Gases at High Temperatures

H. Cheung and C. R. Wilke

Assembly of the thermal conductivity cell was completed. Tests were made with nitrogen at 175°C. The thermal conductivity obtained is in good agreement with literature values.

A flow system for mixing gases was constructed. Two capillary flow meters in the system were calibrated. Calibration of three other flowmeters is in progress.

GENERAL CHEMISTRY

W. M. Latimer, Director

METALS AND HIGH-TEMPERATURE THERMODYNAMICS

Leo Brewer, Richard Brewer, John Engelke, William Hicks, James Kane, Oscar Krikorian, Ketil Motzfeldt

Determination of Ground States of Gaseous Molecules

Experiments to determine ground states of SO and C_2 continue. No definite results have been obtained yet.

Gaseous Carbon Species

ZrC has proved to be a possible internal standard for fixing the heats of sublimation of the carbon species C_2 and C_3. Measurements are in progress. Uniform temperatures have been attained in the King furnace.

Study of Vapor Species

The vapor pressure studies of Na_2CO_3 have been completed. Na_2CO_3 vaporizes to Na + O_2 + CO_2 from a constant-boiling melt of Na_2CO_3 + Na_2O.

It is believed that the cause of the error in previous studies of the chlorides of Mo has been uncovered. Water impurity in the HCl system is believed to cause the formation of a very stable gaseous hydroxychloride molecule of Mo.

Vaporization and Condensation Coefficients of Molecular Beams

It has been demonstrated that both red phosphorus and arsenic have very low vaporization and condensation coefficients. It has been found possible to catalyze the vaporization of red phosphorus by the introduction of Tl metal. Mass spectrometer examination of arsenic vapor from a Langmuir-type experiment has shown As_4 to be the main species rather than As_2, as had been expected.

BASIC CHEMISTRY, INCLUDING METAL CHELATES

John Below, Howard Cady, Robert E. Connick, Armine Paul, and Robert Wood

The Spectrophotometric Study of Rapid Reactions

A device for rapidly mixing two liquids: Early in June a special device was made to mix liquids rapidly, and all of July and August up to the present has been devoted to perfecting its operation and studying its behavior.

The mixer is an oblong stainless steel box 5 cm wide, with quartz observation windows at the bottom. Inside, a sliding baffle divides the interior into two regions, but in such a way that these regions interlace twenty times. The two solutions to be mixed are introduced into the two regions, with the baffle separating them. An external coiled spring is then released, rapidly pulling the baffle up out of the observation path. The ensuing turbulence mixes the two liquids rapidly. The mixture is then observed through the windows spectrophotometrically by means of a continuous recording instrument.

One problem was to avoid the formation of air bubbles formed by the great turbulence involved in withdrawing the baffle. This has been solved by thorough outgassing of the liquids and by filling the mixing device in a high vacuum. Considerable time was spent in leak-proofing the mixer. The baffle was found to withdraw in 6 milliseconds, with the spring used.

In order to test mixing speed, the mixing of aqueous solutions of sodium p-nitro phenolate and perchloric acid have been introduced into the mixer. The p-nitro phenolate ion absorbs strongly in the blue, p-nitro phenol does not. Hence, if the neutralization is very rapid, any absorption of the mixed liquids in the blue should represent unmixed p-nitro phenolate ion. Thus, by following the curve of absorption versus time, we should find the mixing speed. It has proved to take about 40 milliseconds to attain ultimate mixing of approximately 30 ml of solution, whereas we would like less than 10 milliseconds. We are now preparing to check that the reaction is indeed very rapid. If this research shows the mixer is to blame, we will increase the strength of the spring in order to drive the baffle faster.

Another problem was the difficulty of controlling the stoichiometry in the zone of mixing. This is believed due to premixing by leakage around the baffles, and we have attempted to cure it by lowering the fit tolerances in the mixing device.

Chemistry of Ruthenium

The work during this quarter has followed two paths, the first being directed toward establishment of the uncomplexed Ru_{IV} species, the second being attempts to prepare reproducible solutions of pure Ru_{III} and Ru_{IV}.

Potentiometric titrations of RuO_4 with Fe^{++} were carried out in hopes that they would yield information about the Ru_{IV} species. The behavior of the electrodes, however, was too variable to permit any interpretation of the data.

An attempt to determine the charge on the Ru_{IV} species, using a colorless Dowex-50 ion-exchange resin, showed that the charge per species was high.

It is possible to prepare Ru_{IV} solutions that differ greatly in the molecular weight of the Ru species. The following experiments in 1 M CF_3COOH are an illustration.

Reduction using H_2 gas in contact with a stirred RuO_4 solution gives an Ru_{IV} solution in which the main species has a molecular weight greater than 5000. This is determined by the fact that most of the material would not pass through a "Visking" membrane. Reduction using Fe^{++} added slowly in a potentiometric titration gives a product that has a molecular weight of 1000^{+1000}_{-500}. This was determined by Dr. Schachman, using an ultracentrifuge. Reduction using Hg_2^{++} in excess probably gives a species of lower molecular weight, because it is noncolloidal, whereas the previous two solutions are definitely colloidal.

Information Division
10-8-54 og