UCRL 2774
UNCLASSIFIED

UNIVERSITY OF
CALIFORNIA

Radiation Laboratory

TWO-WEEK LOAN COPY

This is a Library Circulating Copy
which may be borrowed for two weeks.
For a personal retention copy, call
Tech. Info. Division, Ext. 5545

BERKELEY, CALIFORNIA

DISCLAIMER

This document was prepared as an account of work sponsored by the United States Government. While this document is believed to contain correct information, neither the United States Government nor any agency thereof, nor the Regents of the University of California, nor any of their employees, makes any warranty, express or implied, or assumes any legal responsibility for the accuracy, completeness, or usefulness of any information, apparatus, product, or process disclosed, or represents that its use would not infringe privately owned rights. Reference herein to any specific commercial product, process, or service by its trade name, trademark, manufacturer, or otherwise, does not necessarily constitute or imply its endorsement, recommendation, or favoring by the United States Government or any agency thereof, or the Regents of the University of California. The views and opinions of authors expressed herein do not necessarily state or reflect those of the United States Government or any agency thereof or the Regents of the University of California.

UCRL-2774
Unclassified Instrumentation

UNIVERSITY OF CALIFORNIA
Radiation Laboratory
Berkeley, California

Contract No. W-7405-eng-48

AN AUTOMATIC EXPOSURE CONTROLLER FOR ROENTGENOGRAPHIC EXAMINATION

William E. Nolan, George F. Schrader, and Gordon M. Fitzgerald

November 4, 1954

Printed for the U. S. Atomic Energy Commission

AN AUTOMATIC EXPOSURE CONTROLLER FOR ROENTGENOGRAPHIC EXAMINATION

William E. Nolan, George F. Schrader, and Gordon M. Fitzgerald

Radiation Laboratory, Department of Physics
University of California, Berkeley, California

November 4, 1954

ABSTRACT

An automatic timing device capable of automatically controlling the density of roentgenographic exposures is described. At the present writing the instrument has been used only in the field of Oral Roentgenography; one can see, however, that its principle has many applications in the field of Medical as well as Industrial and Oral Roentgenography.

AN AUTOMATIC EXPOSURE CONTROLLER FOR ROENTGENOGRAPHIC EXAMINATION

William E. Nolan, George F. Schrader, and Gordon M. Fitzgerald

Radiation Laboratory, Department of Physics
University of California, Berkeley, California

November 4, 1954

INTRODUCTION

An extensive investigation into exposure problems in the field of diagnostic roentgenography has been made, and it is apparent that there is need for an instrument of the type described in this report.

Automatic control of the density of the roentgenographic film in the fields of Oral and Industrial Roentgenography has been neglected in the past; however, it would appear that this now can be accomplished with the minimum of effort and expenditure.

With the exception of the phototimer described by several authors,[1,2,3] little can be found in the literature pertaining to the control of the density of film during roentgen-ray exposure. This is especially true in the field of Oral Roentgenography, where the thickness of the anatomical structures is never ascertained.

For many years most x-ray technicians have been doing nothing more than estimating the exposure that would produce the density necessary for a good radiograph. In most instances this type of guesswork is incorrect and results in radiographs that are either over- or underexposed, necessitating many retakes and, of course, exposing the patient and operator to excessive amounts of radiation. It also results in a heavier load on the x-ray equipment.

---

[1] R. H. Morgan, A Photo Electric Timing Method for the Automatic Control of Radiographic Exposures, Amer. J. Roentg., 48, 220-228 (1942).

[2] P. C. Hodges and R. H. Morgan, Photo Electric Timing in General Roentgenography, Amer. J. Roentg., 53, 474-482 (1945).

[3] P. C. Hodges, R. T. Jenkins, and S. F. Williams, An Improved X-Ray Phototimer, Amer. J. Roentg., 54, 64-73 (1950).

What is needed is a device that is essentially foolproof and that assures the production of radiographs that have the same density regardless of the area being radiographed. This type of device would eliminate all the guesswork in the taking of good radiographs.

Determining the exposure that will produce the optimum density on a radiographic film poses several difficulties. Most important is determining the density of material that is to be radiographed. It is nearly always possible to measure the thickness of material to be radiographed, but one never knows how dense this material may be, hence it is practically impossible to go from one patient to the next and produce the same density on both films.

We have designed the first model for use in conjunction with the dental x-ray unit (Fig. 1), since this is the field in which it seems to be most difficult to reproduce the same density from film to film and from patient to patient, and since most dental x-ray units present a greater radiation hazard to the patient and operator than do most medical diagnostic units.

AN AUTOMATIC CONTROLLER FOR DENTAL X-RAY EXPOSURES

The instrument has been designed to measure the radiation incident on the photographic film in terms of ionization while taking dental x-rays, and to terminate the exposure when the optimum density has been reached. This unit consists of a small sensing element fixed to the back of the x-ray film, a measuring circuit, a system of relays adjusted to trip at the desired exposure, a cord that plugs into the receptacle normally occupied by the hand timer, and a cord that plugs into the panel of the electrometer and is equipped with a remote-type push button to initiate the exposure.

The sensing element is a thin ionization chamber, about 2 cc in volume (Fig. 2), constructed to fit conveniently behind the film and to act as a film holder. The chamber is connected to a handle through which a coaxial cable leads from the chamber to the measuring device (Fig. 3). A number of sensing elements have been investigated, but the ionization chamber was the only one that was found suitable for integrating the incident radiation and which could be made small enough to fit conveniently into a patient's mouth.

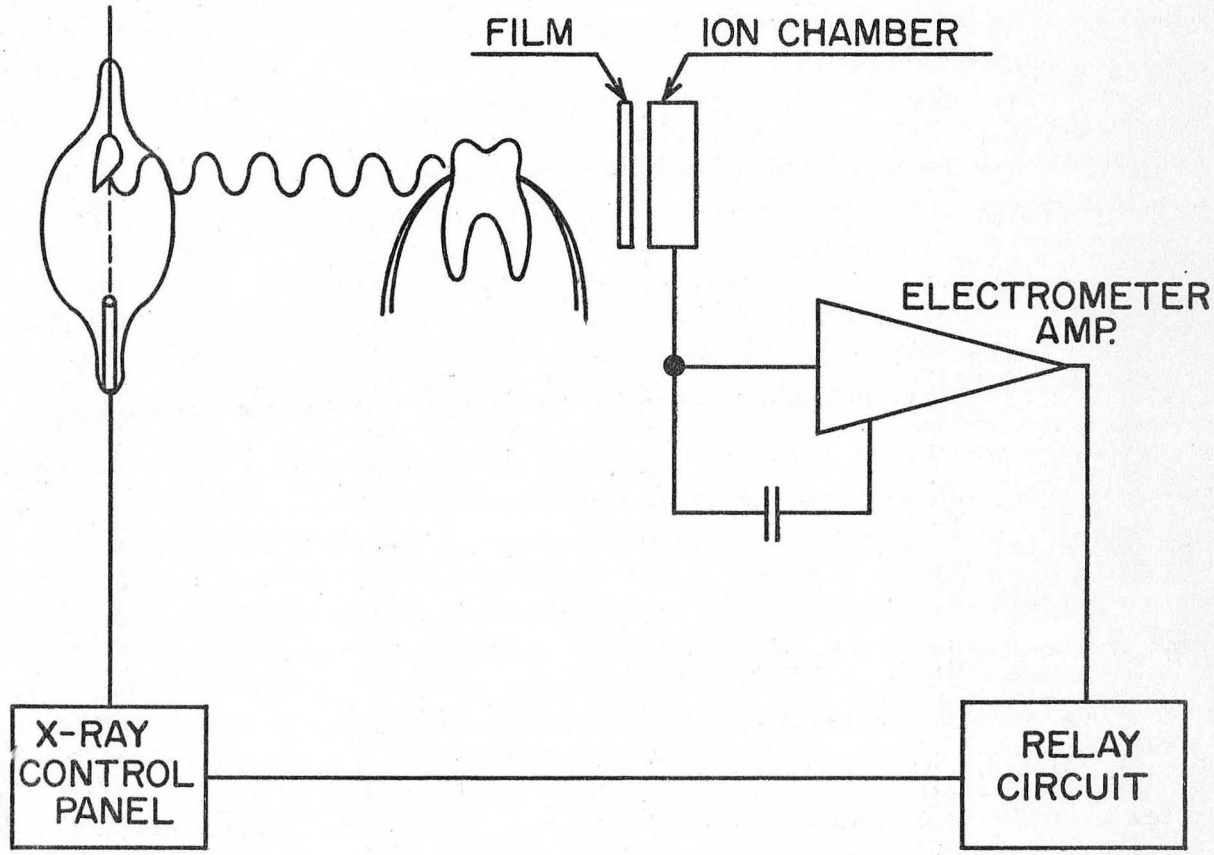

Fig. 1. Block diagram showing how timer is used in conjunction with a dental x-ray unit.

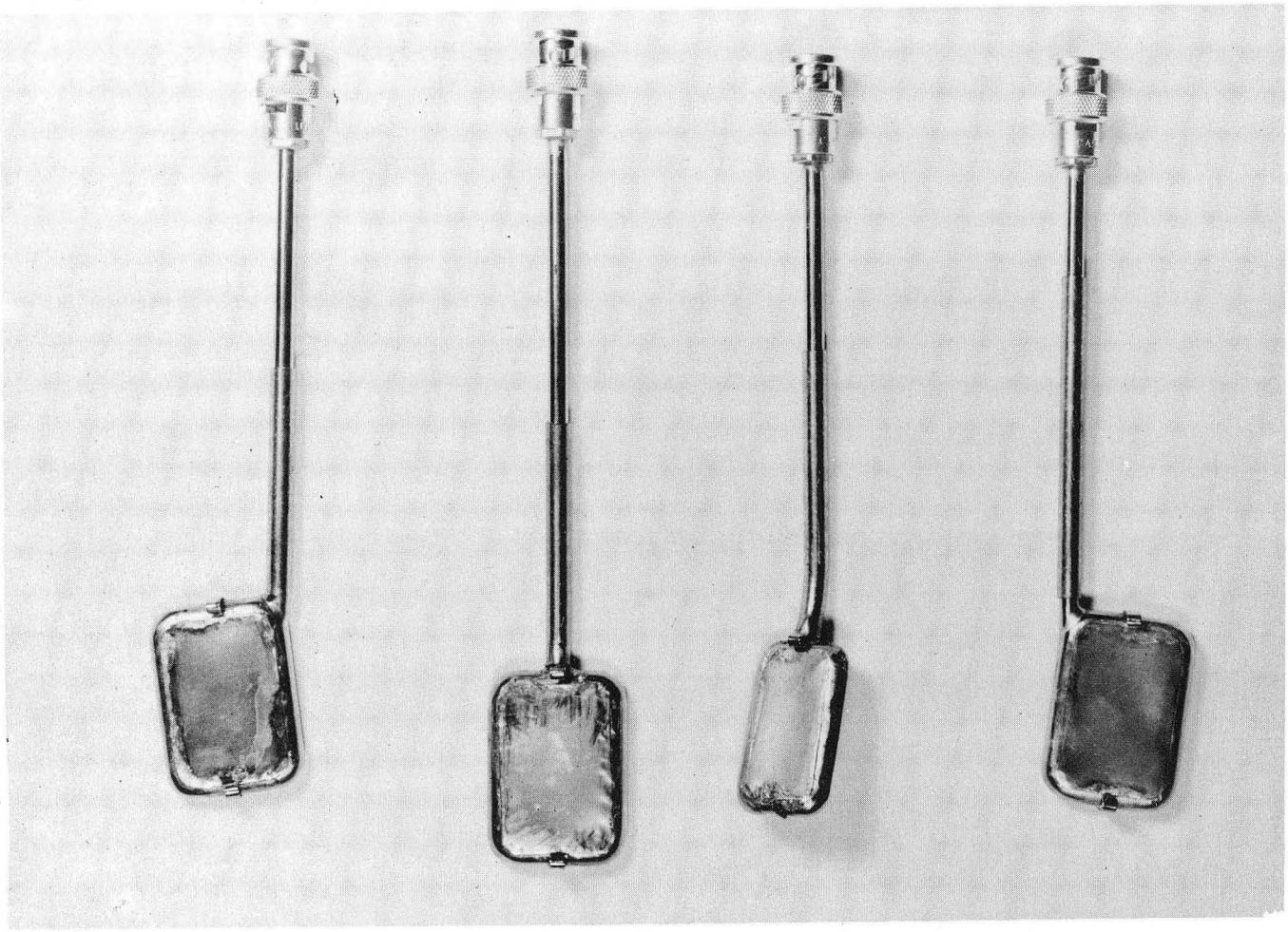

ZN-1044

Fig. 2. Four types of ionization chambers with bayonet connections for quick interchanging. From l to r: Chamber used for lower left and upper right molar regions. Chamber used for bite-wings. Chamber used for anterior regions. Chamber used for lower-right and upper left molar regions.

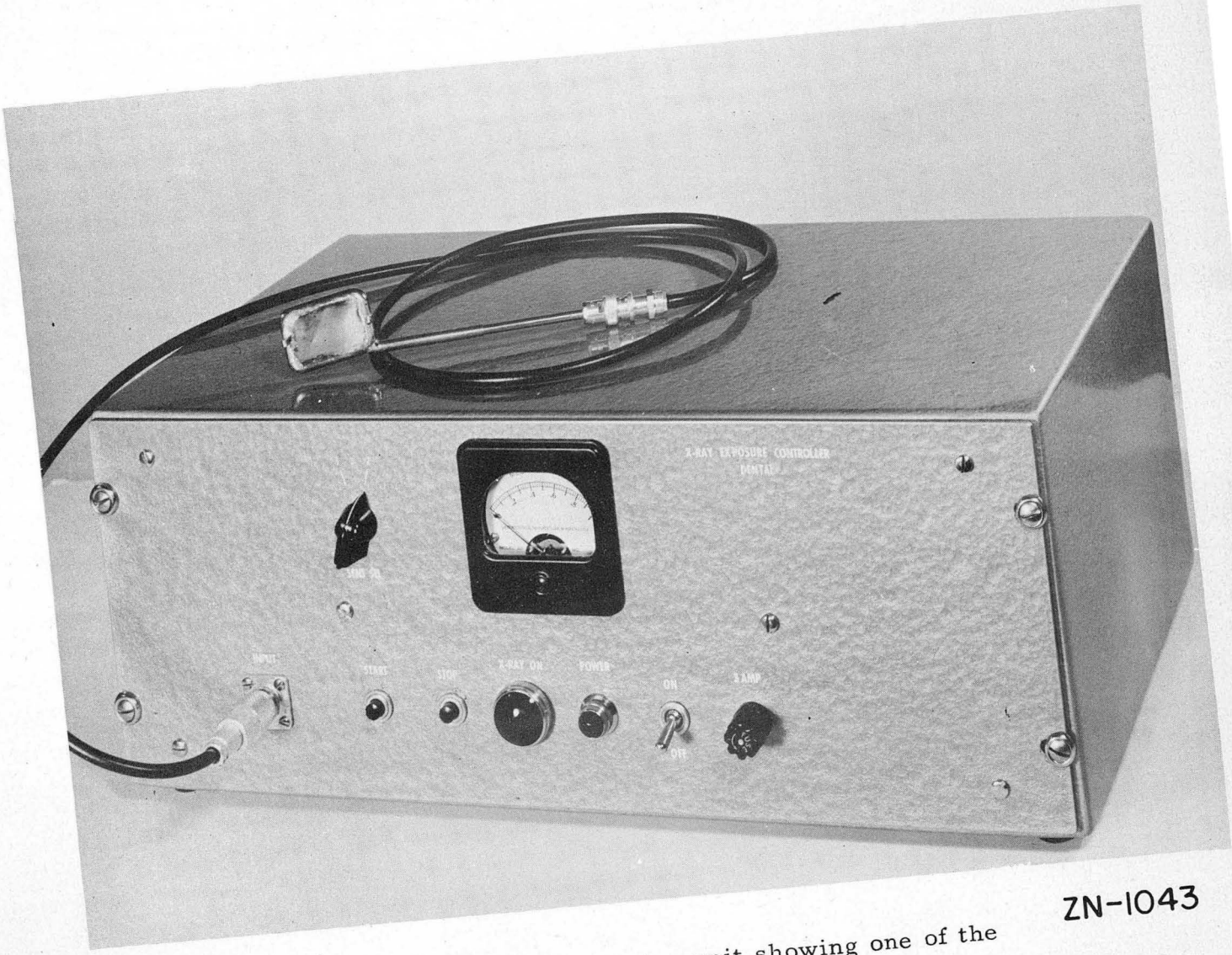

ZN-1043

Fig. 3. Electrometer unit showing one of the ionization chambers ready for use.

The measuring circuit is a feedback electrometer integrator as described by Littauer[4] (Fig. 6). Since there is no requirement on linearity, a much simpler circuit would undoubtedly have accomplished the purpose, but the inherent stability of the feedback integrator made it desirable for use where expert electronic service is not always available.

Gain Stability

In an inverse feedback amplifier the gain is given by the expression

$$G = \frac{A}{1 + AB},$$

where G is the gain,

A is the unfedback gain of the amplifier,

B is the fraction of the output that is fed back.

As long as AB is much greater than 1 the gain is reasonably independent of the unfedback gain A, and is approximately equal to 1/B.

This makes the response of the system nearly independent of changes in tubes and components due to aging, and compensates for variations between individual tubes. The feedback also cancels spurious signals that may be picked up from other parts of the unit.

Relay Circuit

The relay circuit is so designed that a failure of any part of the unit cannot cause the x-ray unit to be energized. In addition to this, a time-delay relay has been incorporated in the circuit so that in the event the x-ray unit is energized inadvertently or the circuit fails to operate for any reason, the x-ray unit will be turned off automatically at the end of ten seconds.

Time-delay relays are also available to limit the "on" time from 5 sec to 30 sec, depending on the demand.

We hope to accomplish several things with this instrument:

1. To eliminate retakes because of improper exposure.
2. To minimize the exposure to patient and operator.
3. To reproduce the same density on each film regardless of the area being photographed. (Figs. 4 and 5.)

---

[4] Rev. Sci. Instr. 25, No. 2, 148 (February, 1954).

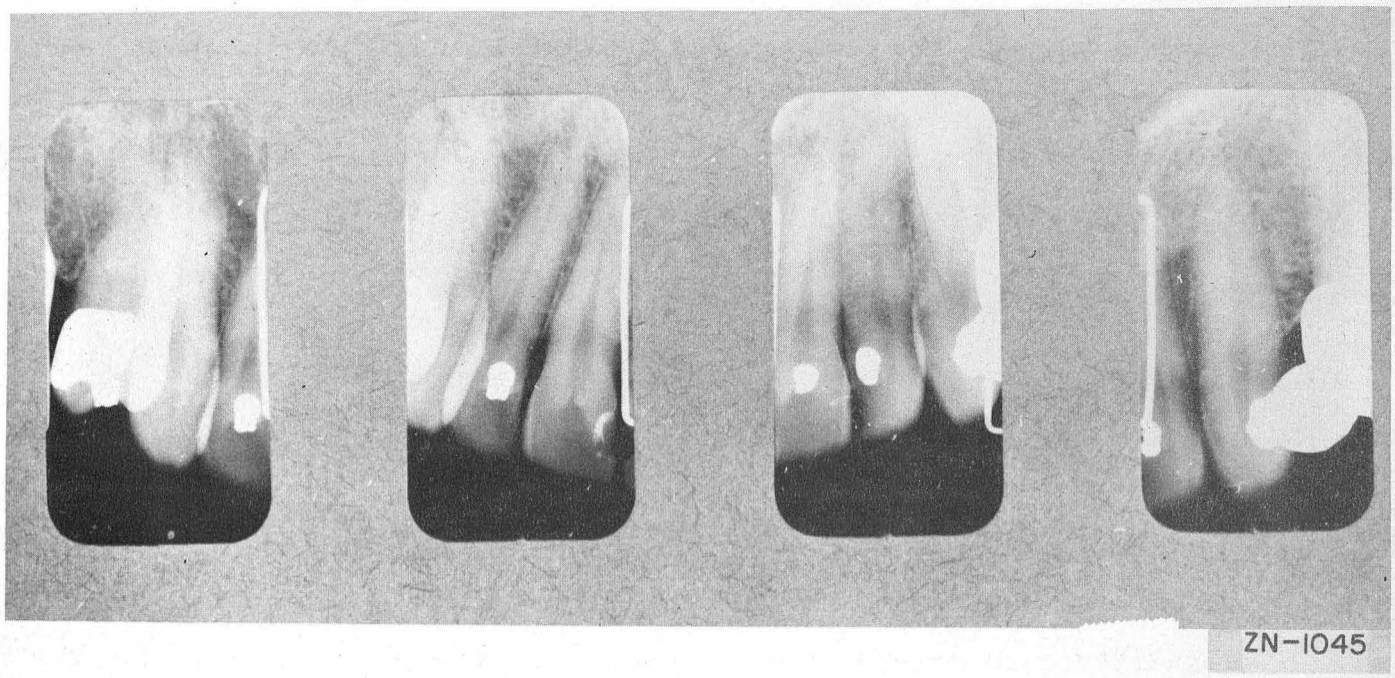

Fig. 4. Typical exposures obtained using the Automatic Exposure Controller - Patient A.

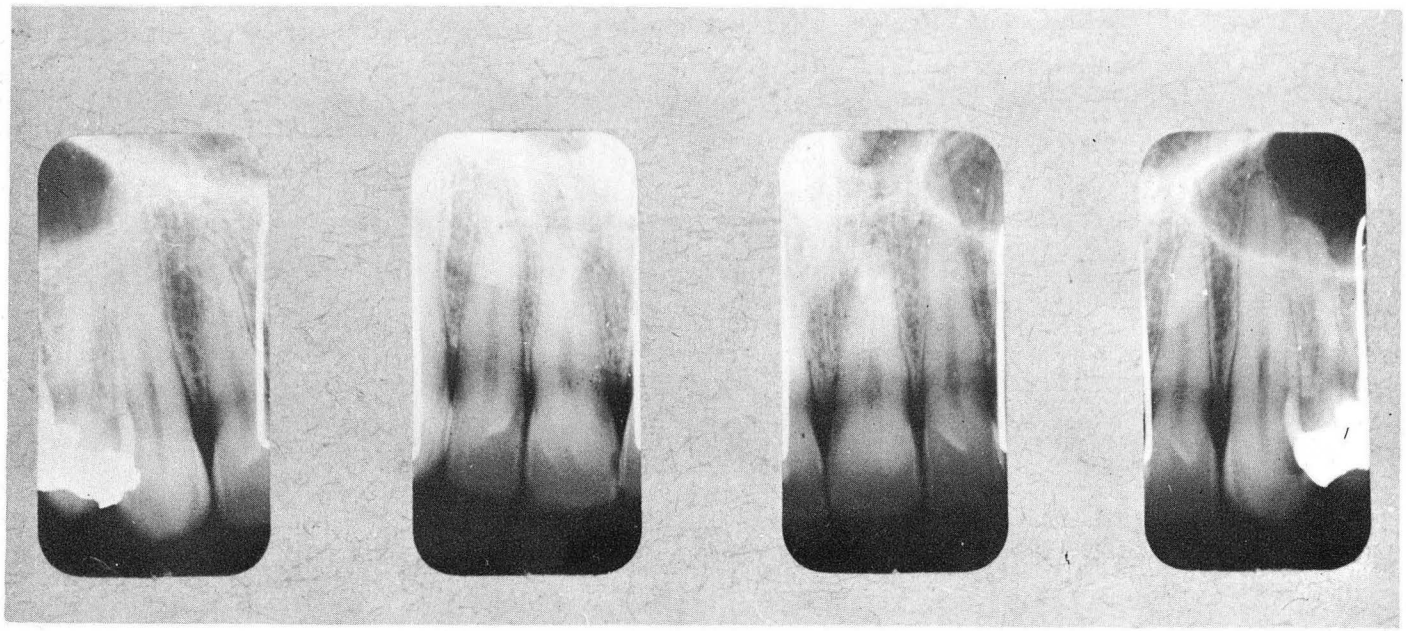

ZN-1046

Fig. 5. Typical exposures obtained using the Automatic Exposure Controller - Patient B.

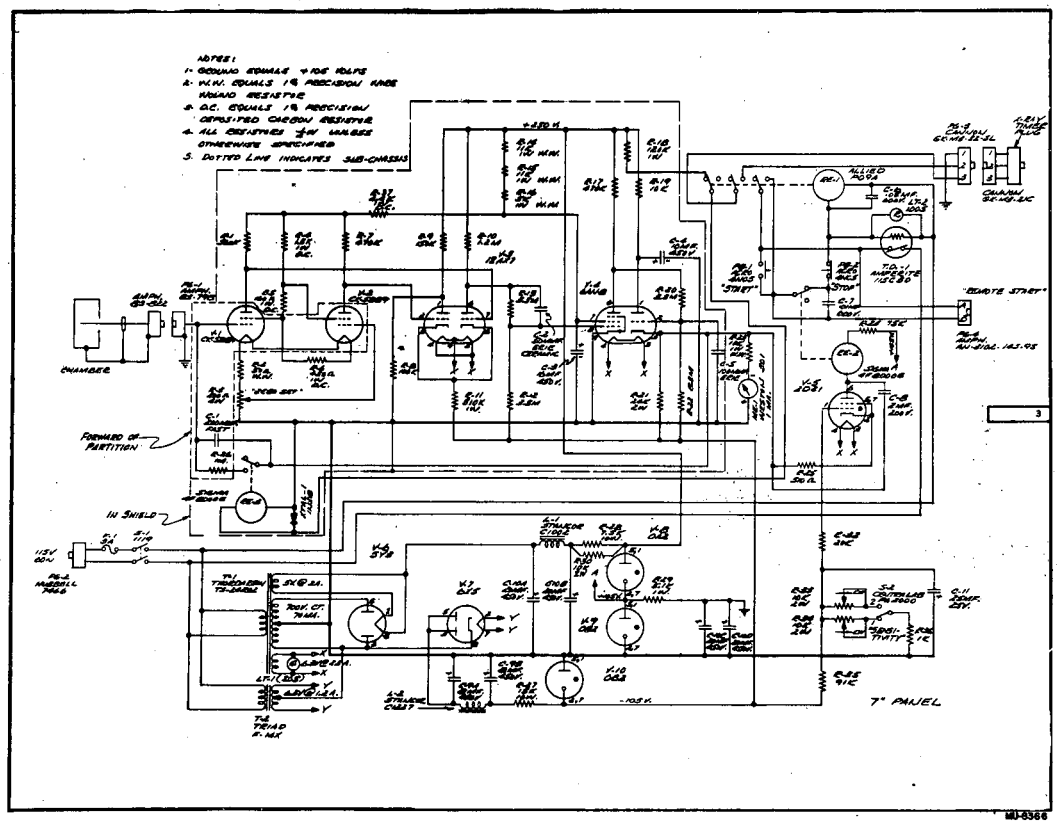

Fig. 6. Schematic of electrometer circuit.

4. To reduce the load on the x-ray equipment.

Since the density of the film depends upon the amount of radiation reaching it (as indicated by the ionization measured by the chamber), it makes little difference what part of the anatomy is to be radiographed.

ACKNOWLEDGMENT

This work was done under the auspices of the U. S. Atomic Energy Commission.

Information Division
11-9-54 ba