DECLASSIFIED

UCRL 2775 (Deleted)
C.1

~~SECRET~~

UNIVERSITY OF CALIFORNIA

Radiation Laboratory

RESTRICTED DATA

This document contains restricted data as defined in the Atomic Energy Act of 1946. Its transmittal or the disclosure of its contents in any manner to an unauthorized person is prohibited.

BERKELEY, CALIFORNIA

DECLASSIFIED

~~SECRET~~

C.1

DISCLAIMER

This document was prepared as an account of work sponsored by the United States Government. While this document is believed to contain correct information, neither the United States Government nor any agency thereof, nor the Regents of the University of California, nor any of their employees, makes any warranty, express or implied, or assumes any legal responsibility for the accuracy, completeness, or usefulness of any information, apparatus, product, or process disclosed, or represents that its use would not infringe privately owned rights. Reference herein to any specific commercial product, process, or service by its trade name, trademark, manufacturer, or otherwise, does not necessarily constitute or imply its endorsement, recommendation, or favoring by the United States Government or any agency thereof, or the Regents of the University of California. The views and opinions of authors expressed herein do not necessarily state or reflect those of the United States Government or any agency thereof or the Regents of the University of California.

UNIVERSITY OF CALIFORNIA
Radiation Laboratory

Cover Sheet
Do not remove

INDEX NO. UCRL-2775 Deleted
This document contains 15 pages
This is copy 2 of 6 series B
Date November 4, 1954

DECLASSIFIED

~~UCRL-LIVERMORE~~
Issued to Information Division

INFORMATION DIVISION
RADIATION LABORATORY
UNIVERSITY OF CALIFORNIA
BERKELEY, CALIFORNIA

~~SECRET~~
Classification

Each person who receives this document must sign the cover sheet in the space below.

Route to	Noted by	Date	Route to	Noted by	Date
	J Wilcox	12-23-54			
	J Wilcox	JAN 4 1955			
Patent	Dept. [illegible]	3-3-55			
info	[illegible]	4-6-55			
	[illegible]	Nov 30, 1955			

RL-220

DECLASSIFIED

SECRET

UCRL-2775 Deleted

Project Sherwood Distribution

UNIVERSITY OF CALIFORNIA
Radiation Laboratory
Berkeley, California

Contract No. W-7405-eng-48

CLASSIFICATION CANCELLED with deletions
BY AUTHORITY OF THE DECLASSIFICATION
BRANCH USAEC ON 2-20-59
DATE
By B. Hoskins
SIGNATURE OF THE
PERSON MAKING THE
CHANGE

SPECIAL DEVELOPMENTS PROJECT

Progress Report II: February 1, 1954 to November 1, 1954

Lawrence Ruby

November 4, 1954

RESTRICTED DATA
This document contains restricted data as defined in the Atomic Energy Act of 1946. Its transmittal or the disclosure of its contents in any manner to an unauthorized person is prohibited.

Printed for the U. S. Atomic Energy Commission

SECRET

DECLASSIFIED

Distribution: Series A	Copy No.
Dr. Edward Teller, UCRL Livermore	1
Dr. Herbert F. York, UCRL Livermore	2
Dr. Richard F. Post, UCRL Livermore	3-5
Dr. J. L. Tuck, Los Alamos Scientific Laboratory	6-8
Dr. Norris Bradbury, Los Alamos Scientific Laboratory	9
Dr. Ernest O. Lawrence, UCRL Berkeley	10
Dr. William M. Brobeck, UCRL Berkeley	11
Dr. Lyman Spitzer, Jr., Princeton University	12-14
Dr. J. von Neumann, Princeton University	15
Dr. James Van Allen, State University of Iowa	16
Dr. Lloyd P. Smith, Cornell University	17
Dr. William P. Allis, Massachusetts Institute of Technology	18
Dr. Alvin Weinberg, Oak Ridge National Laboratory	19
Dr. E. D. Shipley, Oak Ridge National Laboratory	20-21
Dr. Morton Hammermesh, Argonne National Laboratory	22-23
Dr. Hartland Snyder, Brookhaven National Laboratory	24-25
Dr. Willard H. Bennett, Naval Research Laboratory	26
Dr. Arthur E. Ruark, University of Alabama	27
Dr. Harold Grad, New York University	28
Dr. Robert Richtmyer, New York University	29
Dr. T. H. Johnson, Division of Research, AEC	30
Dr. A. S. Bishop, Division of Research, AEC	31
Dr. Lawrence R. Hafstad, Division of Reactor Development AEC	32
Col. E. T. Dorsey, Division of Military Application, AEC	33
Mr. Frank Huke, New York Operations Office	34
Dr. Herman Roth, Oak Ridge Operations Office	35
Mr. A. J. O'Donnell, San Francisco Operations Office	36
Technical Information Service, Oak Ridge	37-61
Mr. D. J. Leehey, Santa Fe Operations Office	62

DECLASSIFIED

SPECIAL DEVELOPMENTS PROJECT
Progress Report II: February 1, 1954 to November 1, 1954

Lawrence Ruby

Radiation Laboratory, Department of Physics
University of California, Berkeley, California

November 4, 1954

ABSTRACT

Further work has been done towards developing a high-output hydrogen ion source using the principle of the [redacted] ion source, the release of ions from hydrogenated titanium. It is concluded that previous efforts had resulted in the production of large quantities of low-energy ions but had failed in the attempt to accelerate a significant fraction of these. A new approach is undertaken that involves an entirely different geometry. Successfully accelerated and focused beams are obtained. Performance data and mass-analysis distributions are given. The problems of extraction and scaling are discussed. Future subjects of investigation are outlined.

SPECIAL DEVELOPMENTS PROJECT
Progress Report II: February 1, 1954 to November 1, 1954

Lawrence Ruby

Radiation Laboratory, Department of Physics
University of California, Berkeley, California

November 4, 1954

This report covers further work towards developing a high-output hydrogen ion source based on the [redacted] ion source, and towards understanding the mechanism involved. An earlier report[2] described some efforts to increase the output and improve the durability of the [redacted] source. It was concluded from experiments in the period covered by the first report that the prerequisite for the release of ions from hydrogenated titanium is the existence of a spark originating on the surface of the metal, and therefore that the delicate evaporated structures could be eliminated in favor of the massive metal. In practive it was customary to form a cluster of such sparks from at least 10 adjacent Ti elements in order to average out individual variances. The final source assembly described in the first report consisted of a 3/4-inch length of 0.040-in. quartz rod which supported a piece of 0.002-inch-wall Ti tubing that had been severed completely in 10 places along its length. The individual sections of tubing formed butt joints with one another and the stack was clamped at each end with stainless steel support rods. It was reported that three such units produced 200 amps of ions for 15 μsec with 700 volts on the collector.

Further experiments with this type of source revealed that the clamping pressure on the stack was an important parameter. If the clamping was too tight, good-contact joints were formed and no sparking resulted from the discharge of the pulse line through the stack. If, on the other hand, the clamping was too loose, the threshold voltage required to break down the gaps became unreasonably high.

In order to insure the uniformity of the gap spacing, thin mica insulators were inserted between each Ti section, and furthermore, since the thickness of the Ti seemed immaterial, the tubing sections were replaced by a more substantial washer-type construction. The stack then appeared as shown in Fig. 1. The threshold voltage for breakdown across the surface of the mica was dependent on

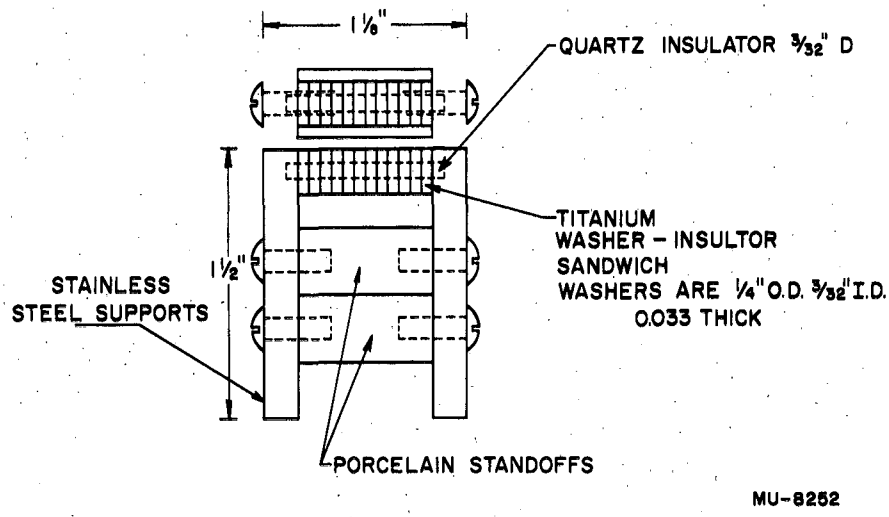

Fig. 1 "Outside" washer source.

its thickness, but extremely thin pieces frequently punctured from sparking through the body instead of across the surface. A compromise was reached at 0.005 inch, which led to a threshold voltage in the range 8 to 12 kv. The emission from this source was if anything more copious than from the previous modifications.

A serious question arose concerning the effectiveness of the electric field in imparting energy to ions that passed through the accel aperture. Because of a particular application which required a large beam of several-kilovolt ions with large divergences permissible, all attempts were made to accelerate ions from a large area of the plasma by using a large aperture electrode, i.e. 1/2 inch to 3 inches. The problem of holding this voltage in the presence of the high-density plasma was in itself the object of much effort, but even succeeding in this, it was finally concluded, would not insure the acceleration of more than a very small fraction of the ions passing through the aperture. The reasons for this are treated further on. Because even very large quantities of low-voltage ions were of no particular interest, further work on this geometry was discontinued.

A new series of experiments was initiated to apply the methods discovered towards the production of a pencil of accelerated ions suitable for an accelerator injector. A promising line of approach was suggested, namely, to confine the discharge to the inside of the washer stack so that the inner diameter would constitute an effective exit aperture for the ions. The initial mode of extraction, acceleration, and magnetic analysis of the beam was copied from procedures evolved in the pig ion-source program.[3]

The arrangement consisted of clamping a washer stack, minus the quartz insulator, between two electrodes, one of which was solid and the other of which contained a hole, initially of the diameter of the inside of the washers, and which flared out at 45° to form one element of a Pierce gun. The extractor consisted of a one-inch-diameter cylinder with a tapered nose which formed the other Pierce electrode. Tapers of 60° and 45° were tried and the latter was found preferable for maximum extraction. The minimum opening in the extractor was about 0.010 inch larger than the inner diameter of the washers, and the usual spacing between the source exit aperture and the extractor was about 1/8 inch. An additional cylindrical electrode was used to accelerate the ions to energies up to 60 kev with consequent constriction of the beam profile.

One problem that arose immediately was how to confine the discharge to the inside of the washer stack. Making the outer diameter of the insulators larger than that of the washers did not eliminate the tendency of the discharge to

frequently prefer the outside of the stack. The additional feature that was found necessary was to trigger the discharge in the region of interest. To do this an insulated wire was inserted through the solid electrode so that the tip was concentric with the first washer. A 1-μsec 30-kv pulse was discharged through these elements. This produced ionization which both initiated the discharge of the pulse line and insured the proper path. In addition it was possible to operate at lower pulse-line voltage than in the former scheme. The polarity of the source pulse line and the relative polarity of the source and trigger pulses have been found to be of no consequence as far as performance is concerned. The completed source assembly is shown in Figs. 2 and 3.

In addition, various other modes of extraction from axial sources have been discussed in the literature,[4] and several have been tried here. For two of these, data are shown in Figs. 4 and 5 for beam collected in an unshielded cup as a function of extractor voltage. An attempt is now being made to ascertain the correction necessary for secondary electrons emitted from the collector.

Mass analysis has been performed at several energies for sources loaded with hydrogen or deuterium. The general arrangement of the electronics is shown in Fig. 3. In this diagram the ball gap marked "B" is necessary only in the event the mica insulators are replaced by materials of low dielectric strength, which would otherwise continuously drain the pulse line. The mass distribution curves are shown in Figs. 6 and 7. It is seen that the ratio of H^+ to H_2^+ is high in comparison with other types of sources. In the case of the deuterium curve, a possible contribution to the H^+ peak may result from the reloading of the deuterium source when it is fired in an oil pumping system. The peaks identified as half-mass ions can be interpreted as half-energy ions that were accelerated as molecular ions and subsequently disassociated in the magnet region. The data on mass analysis presented in the earlier report[2] are crude in comparison and should be disregarded.

A study was made of the effect of scaling up the source. The diameter of all elements was approximately doubled. The resulting collected currents under comparable conditions increased by roughly two. The dependence upon diameter rather than area is to be expected from the fact that only the periphery of the extractor aperture is effective.[4] Inside the aperture the electric field is weakened by the geometry and by the space charge. To counteract this, the extractor voltage can be increased as the aperture is enlarged. In any case for a given geometry a minimum voltage is required to contain the plasma surface and prevent penetration

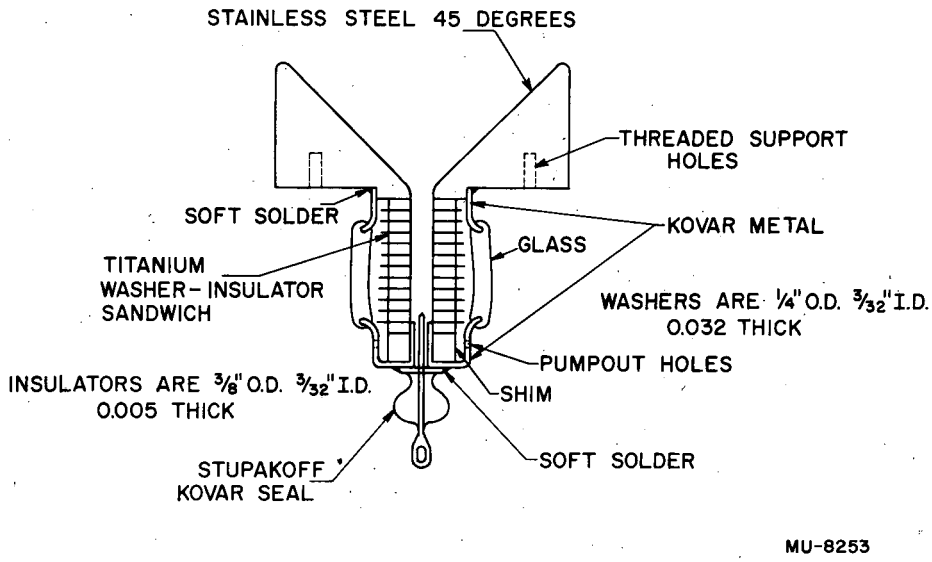

Fig. 2 Cross section of "inside" washer source.

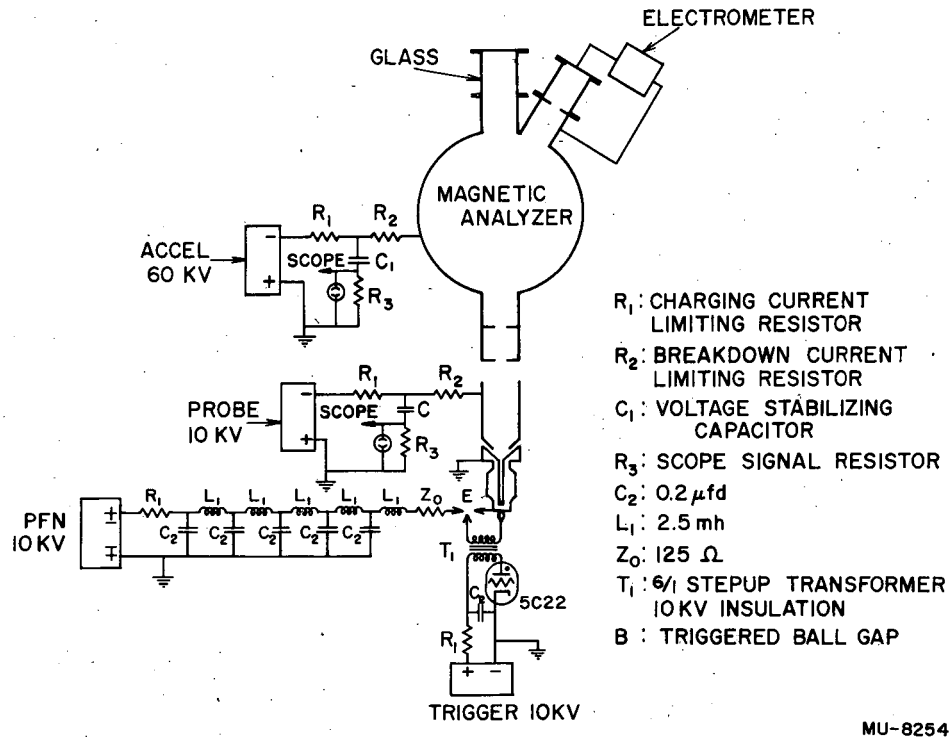

Fig. 3 300-μsec source test setup.

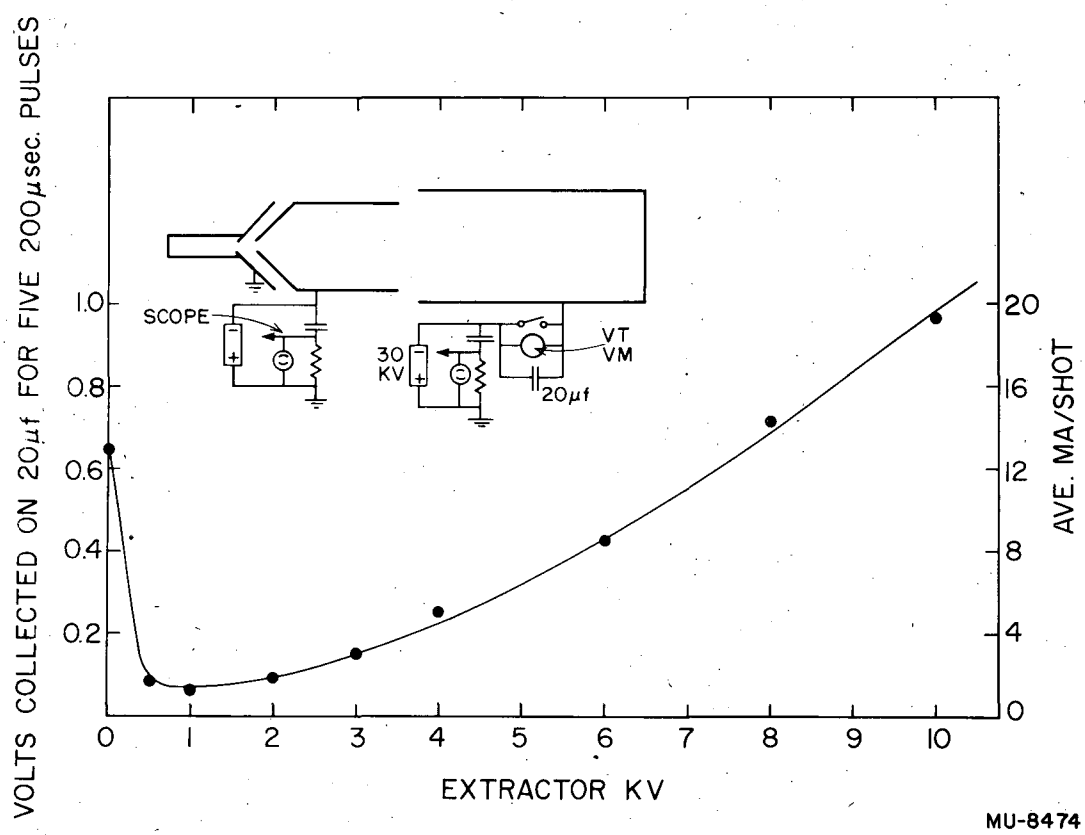

Fig. 4 Collector beam vs extractor voltage.

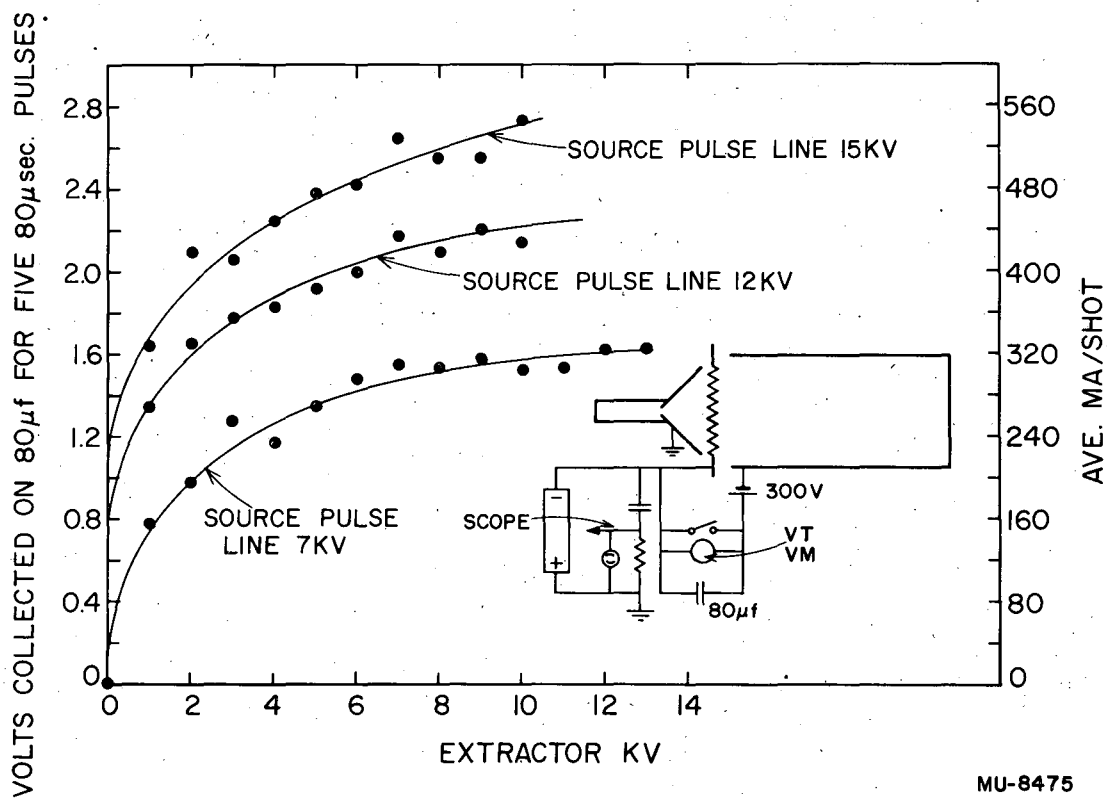

Fig. 5 Collector beam vs extractor voltage.

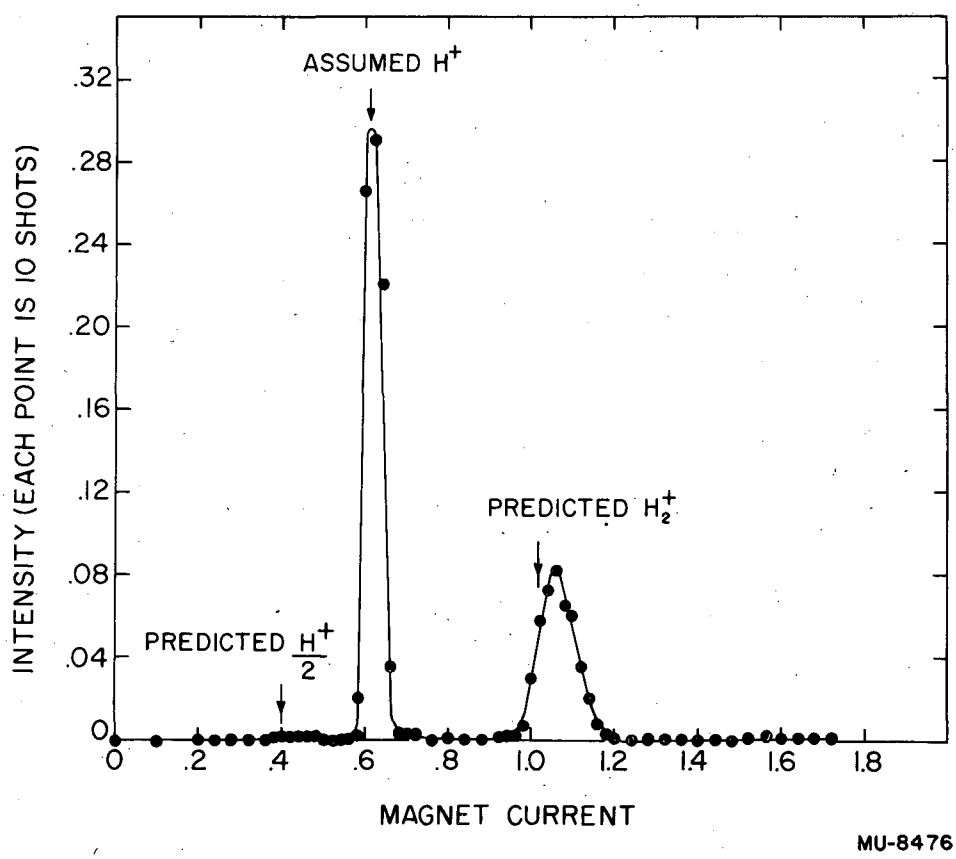

Fig. 6 Distribution of ions from H source with 35 kv accel.

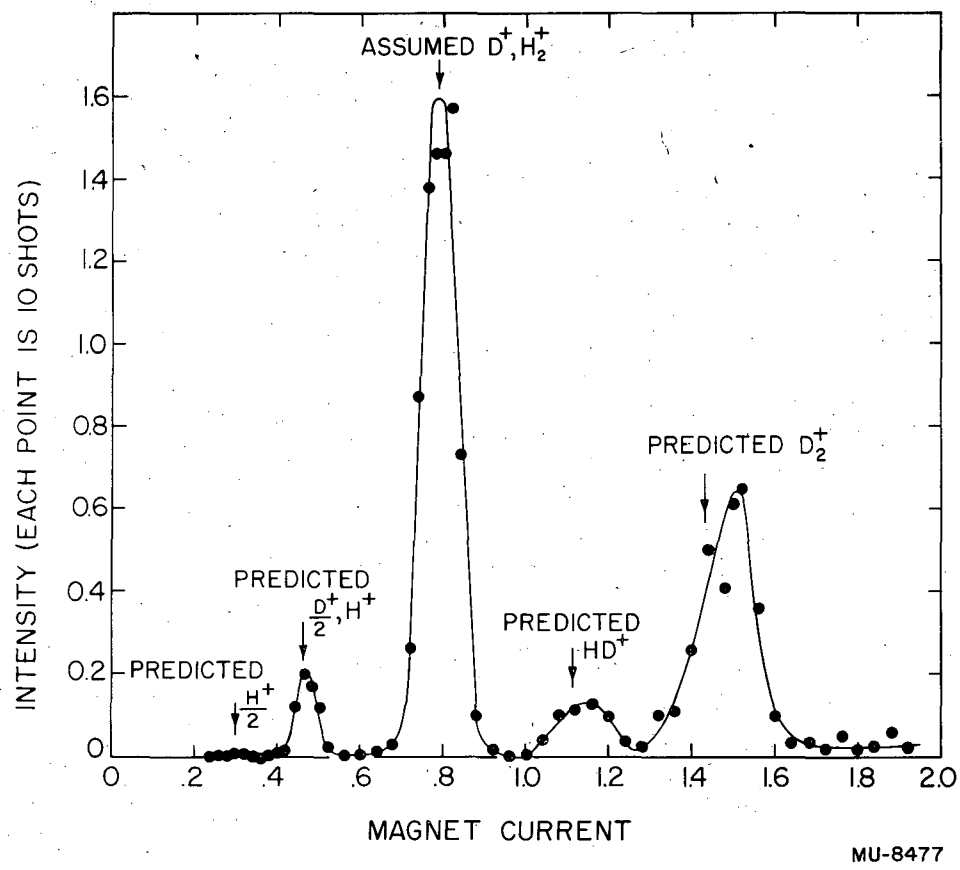

Fig. 7 Distribution of ions from D source with 36 kv accel.

of the aperture by electrons and low-voltage ions. This penetration of the plasma accounts for the ineffectiveness of the large-area apertures discussed in connection with the "outside" washer sources and explains the high collection currents that can be obtained[2] when the distance from plasma boundary to collector becomes very small.

A program is under way to further improve the magnetic measurements. In particular it will be possible to investigate the emission of oxygen, nitrogen, and alkali metal ions, for which there is some evidence.[5] An attempt will be made to measure the depletion of the gas supply, perhaps by monitoring neutron production with a deuterated source. An intensive study of the fundamental mechanism is still contemplated. Such things as the influence of the spark on the degree of ionization are still unknown. In this connection there is a controversy in the literature on whether it is possible to get a sustained emission of protons from hydrogenated palladium by heating alone. Several experimenters have reported successful proton ion sources made in this manner, while several others have failed to observe the effect. The situation is reviewed by R. G. Stansfield.[5] An investigation[6] currently under way at Syracuse University should help resolve this question.

The work described has been performed with the able assistance of Richard B. Crawford, Wing G. Pon, and Tony Vuletich, and has been under the direction of James D. Gow.

This work was done under the auspices of the U. S. Atomic Energy Commission.

DECLASSIFIED
SECRET

References

1. [redacted]
2. L. Ruby, Special Developments Project, Progress Report to February 1, 1954, UCRL-2552.
3. J. D. Gow and J. S. Foster, Jr., A High-Intensity Pulsed Ion Source, UCRL-1698.
4. J. S. Foster, Jr., and E. F. Martina, A Low-Voltage Ion Source, UCRL-1369.
5. R. G. Stansfield, A Search for Ionization of Hydrogen by Diffusion through Palladium, Proc. Camb. Phil. Soc. 34, 120 (1938).
6. P. A. Silberg and C. H. Bachman, Some Studies of the Diffusion of Hydrogen through Palladium, Technical Report No. 1, NP-5223.

SECRET

DECLASSIFIED

SECRET

SECRET