UCRL - 284

UNIVERSITY OF CALIFORNIA

Radiation Laboratory

TWO-WEEK LOAN COPY

This is a Library Circulating Copy which may be borrowed for two weeks. For a personal retention copy, call Tech. Info. Division, Ext. 5545

BERKELEY, CALIFORNIA

UCRL-284 c.2

DISCLAIMER

This document was prepared as an account of work sponsored by the United States Government. While this document is believed to contain correct information, neither the United States Government nor any agency thereof, nor the Regents of the University of California, nor any of their employees, makes any warranty, express or implied, or assumes any legal responsibility for the accuracy, completeness, or usefulness of any information, apparatus, product, or process disclosed, or represents that its use would not infringe privately owned rights. Reference herein to any specific commercial product, process, or service by its trade name, trademark, manufacturer, or otherwise, does not necessarily constitute or imply its endorsement, recommendation, or favoring by the United States Government or any agency thereof, or the Regents of the University of California. The views and opinions of authors expressed herein do not necessarily state or reflect those of the United States Government or any agency thereof or the Regents of the University of California.

UNIVERSITY OF CALIFORNIA
Radiation Laboratory

Cover Sheet
Do not remove

INDEX NO. UCRL-284
This document contains 10 pages
and — plates of figures.
This is copy 82 of 86 Series A

UNCLASSIFIED

RESTRICTED

Classification

Issued to Info Div

Each person who receives this document must sign the cover sheet in the space below

Route to	Noted by	Date	Route to	Noted by	Date

UNCLASSIFIED

UCRL-284
Physics-General

RESTRICTED

UNIVERSITY OF CALIFORNIA

Radiation Laboratory

Contract No. W-7405-eng-48

Special Review of Declassified Reports
Authorized by USDOE JK Baron
Unclassified TWX P. 22002 Jan. 79

REPORT ... UNCLASSIFIED

J B Stuart 8-20-79
Authorized Classifier Date

Marilyn Hernandez 1-22-80
By Date

Summary of the Research Progress Meeting

January 27, 1949

by Henry P. Kramer

UPGRADE TO ~~SECRET, CONFIDENTIAL, RESTRICTED~~ OR UNCLASSIFIED
On 1-4-55 BY RK Waberling (B.Z.)
(SIGNATURE OF ORIGINATOR OR CLASSIFYING AUTHORITY)

CAUTION

This document contains information affecting the National Defense of the United States. Its transmission or the disclosure of its contents in any manner to an unauthorized person is prohibited and may result in severe criminal penalties under applicable Federal Laws.

Berkeley, California

RESTRICTED

Standard Distribution	Copy Nos.
Argonne National Laboratory	1-8
Armed Forces Special Weapons Project	9
Atomic Energy Commission, Washington	10-11
Battelle Memorial Institute	12
Brookhaven National Laboratory	13-20
Bureau of Ships	21
Carbide & Carbon Chemicals Corporation (K-25 Plant)	22-25
Carbide & Carbon Chemicals Corporation (Y-12 Plant)	26-29
Columbia University (Dunning)	30
General Electric Company, Richland	31-34
Hanford Operations Office	35
Iowa State College	36
Knolls Atomic Power Laboratory	37-40
Los Alamos	41-43
Mound Laboratory	44-45
National Bureau of Standards	46-47
Naval Radiological Defense Laboratory	48
NEPA Project	49
New York Operations Office	50-51
North American Aviation, Inc.	52
Oak Ridge National Laboratory	53-60
Patent Branch, Washington	61
Sandia Base	62-63
Technical Information Division, OROO	64-78
UCLA Medical Research Laboratory (Warren)	79
University of California Radiation Laboratory	80-84
University of Rochester	85-86
Total	86

Radiation Laboratory
University of California
Berkeley, California

RESTRICTED

Summary of the Research Progress Meeting

January 27, 1949

by Henry P. Kramer

Radiation Laboratory
University of California
Berkeley, California

The Radiation Field of the 184" Cyclotron. B. Moyer.

Measurements are being made to determine the radiation field outside the shielding of the 184" cyclotron which is now operating with a proton beam. As in the past, when deuterons were being accelerated, three distinct series of measurements are being made. The general level of radiation is determined by means of polystyrene counters in terms of milliroentgens per hour. Slow neutrons are measured with calibrated BF_3-argon filled ionization chambers, and finally, fast neutrons are counted by means of their proton recoil effect. It was found that the chief difference in the appearance of the radiation field from deuteron operation and that from proton acceleration is that considerably higher intensities are observed in certain isolated spots around the shielding where one would expect a high concentration of fast neutrons in the cyclotron. The radiation field from deuterons was much more uniform.

Figure 1 presents a picture of the radiation field as measured with polystyrene counters when the beam was rotating clockwise. When the beam was rotating counter-clockwise the field on the North side of the cyclotron was quite intense in a small region. (Figure 2) The explanation for this phenomenon is two-fold. First, the neutron flux from the dee structure combines with the neutron beam produced in the beryllium target, and second, there is less shielding in this direction due to the absence of an igloo which served to attenuate the flux in the neutron beam when it was directed to the South.

It is apparent from Figures 1 and 2 that local peaks in radiation appear outside the movable blocks of concrete which serve for doors to the interior of the cyclotron.

The reason for this is that the door slabs are only five feet thick whereas the rest of the shielding has a thickness of ten feet of concrete. In order to minimize these local peaks in radiation outside the doors, additional blocks of concrete were placed in the door opening as shown in Figure 3. Figure 3 also shows the improvement in the radiation level which resulted from the additional shielding.

Since the last survey on the variation of radiation level with height above the floor of the building was made an additional 2-foot layer of concrete ceiling slabs was placed over the existing 2-foot slabs so that now the top of the cyclotron is covered with 4 feet of concrete. A corresponding improvement in the variation of the radiation with height was seen. Whereas, previously, the radiation increased from floor to ceiling by as much as a factor of 3, the increase is now only about 50 percent.

The slow neutron flux is rather uniform around the shielding. At 5 feet above the floor a flux of 20 slow neutrons/cm^2/sec. is seen. This increases to about 30 at 12 feet which corresponds to the beam height. Above this region the flux drops again.

Fast neutrons were measured by means of their recoil proton effect most conveniently in terms of energy flux, Mev/cm^2/sec. In this unit the eight-hour tolerance is 200 Mev/cm^2/sec. The results of the measurements are sketched in Figure 4. The dotted line represents the flux before the additional shielding was installed in the doors. The solid line, shows the flux after the blocks were placed in position. It will be noted that the values set down in Figure 4 are applicable when the proton beam is rotating in a counter-clockwise direction. When the neutron beam is directed against the South wall, the flux is everywhere below tolerance.

The Deposition of Sr and Element 61 in the Costo-Chondral Junction of Rats. C. W. Asling.

One is interested in the deposition of tracer material in the bone for various reasons. First of all, fission products, since they are the constituents of minerals, are most likely to find their way to the bone structure once they have entered the body since the bones are the chief repositories of minerals in the animal body. Secondly, the study of radioactive material which is lodged in or near the bone may furnish some

knowledge of the effect of radiation on bony tissue. This knowledge may have some practical value, with possible applications to the treatment of cancer and such blood diseases as are brought about by the destruction of the blood producing marrow, such as anemia and leukemia. Finally, a study of the deposition of tracer material in the bone may lead to a deeper understanding of the constitution of bones and of the life processes which go on in them and their surrounding tissues.

If one traces a bone through its growth from initial formation to ultimate maturity one finds that at first the bone is encased in a considerable shield of cartilage. As the bone grows the cartilage is replaced by hard fibrous tissue until at maturity the cartilage has disappeared as a sheath and is only seen in junctions where it provides an elastic connection. The mature bone shell is surrounded both on the inside and the outside by a layer of tissue which makes possible the lateral growth of the bone. In the process of growth, this tissue turns to bone. The tissue when it is situated external to the bone is known as the periosteum and when it is internal, it is called the endosteum.

The costo-chondral junction is that point on a rib where the bone is joined to the cartilage. It is particularly valuable to study the deposition of tracer material at this place since here all of the elements which have to do with the bone and its growth are concentrated. One is able to observe mature bone, growing bone, periosteum, endosteum, cartilage and perichondrium which is a tissue surrounding the cartilage whose function is analogous to that of the periosteum. A sketch of a costo-chondral juncture is shown in Figure 5.

Americium, curium, strontium, and certain other elements deposit in the periosteum or in close juxtaposition to it. Sr^{89} deposits heavily in the new bone growing near the juncture as well as in the old bone of the rib. Since strontium deposits so generally, it was thought not unlikely that it would deposit in the perichondrium as well as in the periosteum since the two tissues perform practically the same function.

It was found that Sr was deposited in the region of calcification in the cartilage. A radioautograph of the cartilage would look somewhat like the sketch of Figure 5.

This deposition of Sr takes place within 72 hours after administration.

Element 61 on the other hand deposited in or near both the periosteum and the perichondrium. In investigations of the femur, the hip bone, it was observed that there was a spotty deposition near the periosteum which corresponded to the location of the blood vessels. Therefore, element 61 must be carried in the blood stream and deposited by means of it.

However, from the evidence of the radioautographs it seems that Sr travels directly through dense cartilage, since it contains no vascular channels. If it is possible to answer the question: how Sr molecules penetrate cartilage without being carried through blood vessels, one might be able to understand how cartilage which is up to 1/2 inch removed from any blood stream is capable of carrying on the metabolism which is characteristic of living tissue. It is the object of future investigations to determine the path of Sr through the cartilage. Radioautographs will be taken at frequent intervals after administration in order to record the progress of the tracer.

Isotopes of Neptunium. L. B. Magnusson.

Since the discovery of neptunium in 1939 seven isotopes have been found ranging in mass number from 234 to 239 with a wide spread of half-lives from 21 min. for Np^{236} to 2×10^6 yr. for Np^{237}.

Deuteron bombardment in the 60" cyclotron at Crocker Laboratory resulted in the following reactions: $U^{235}(d,n)Np^{236}$, $U^{235}(d,2n)Np^{235}$, $U^{235}(d,3n)Np^{234}$. When U^{233} was bombarded, only the reaction $U^{233}(d,n)Np^{234}$ was observed although sufficient energy was available for reactionsresulting in the emission of up to 4 neutrons and the production of isotopes ranging to Np^{231}.

When the 184" cyclotron was put into operation a search was carried out for the lighter Np isotopes. 70-150 Mev deuterons produced the reaction $U^{238}(d,9n)Np^{231}$. Np^{231} was found to decay by 6.2 Mev alpha emission in 53 min. to Pa^{227} which in turn decayed to Ac^{223}. Since this mass number, 231, was unexpected, its discovery revived hope of finding Np^{232} and Np^{233} which must be very short-lived activities.

Previous workers at Crocker Laboratory were handicapped by the fact that their chemical and radiological identification techniques were not sufficiently perfected to allow them to detect and identify extremely short half-lives. By newer and improved methods, however, it has become possible to extract and identify activities within 1 hour after bombardment ceases. With the improved methods a 35 min. K-capture activity was identified as Np^{233}. The bombardment of U^{233} with 18 Mev deuterons resulted in the creation of a 12 min. K-capture activity. And this activity must probably be identified with Np^{232}.

Charge Neutralization in Bevatron. L. Alvarez.

Experiments will be undertaken to investigate the extent of possible charge neutralization in the bevatron model. It may be necessary to inject at higher energies in order to offset the losses due to this effect.

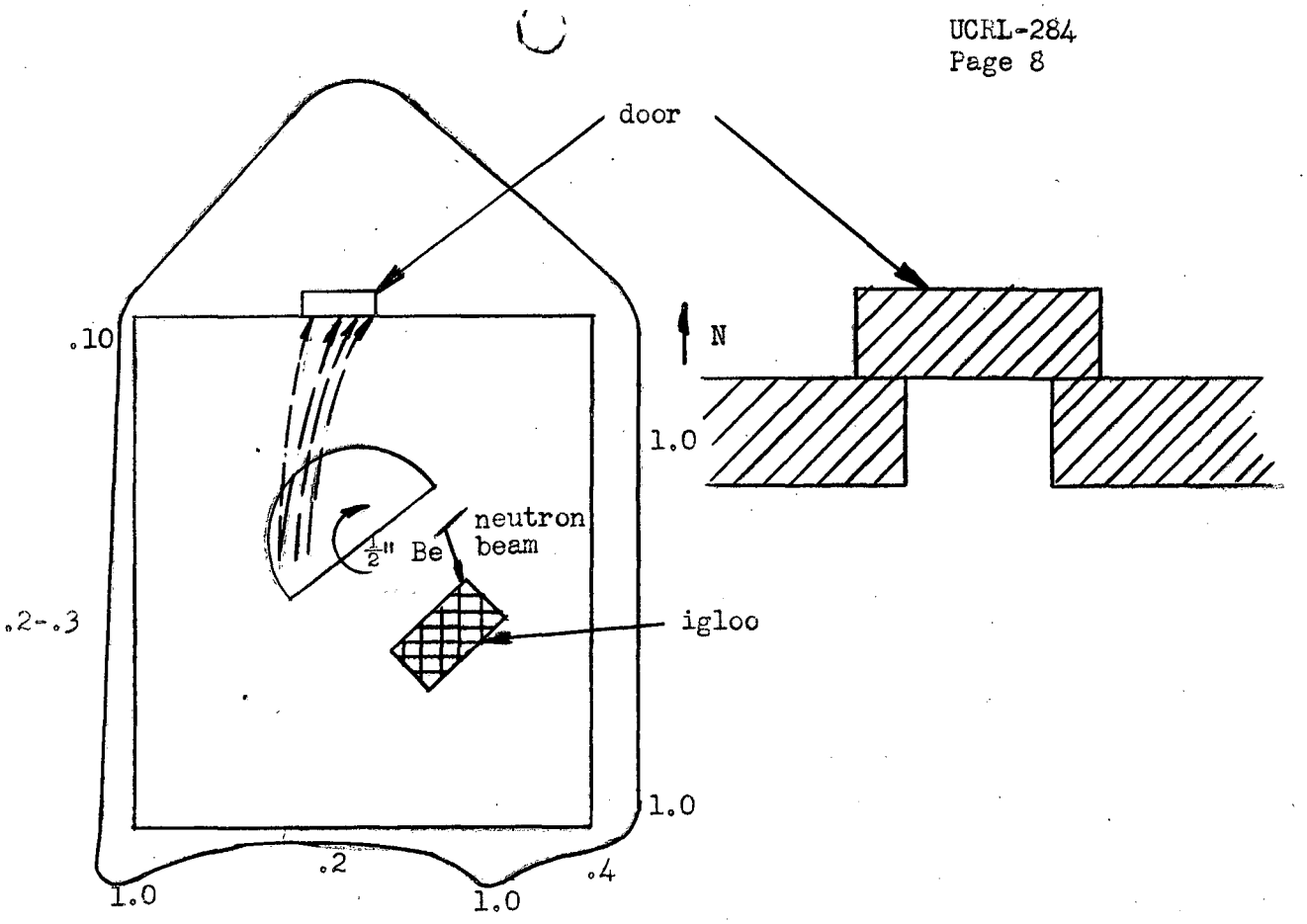

Figure 1. General Radiation Field

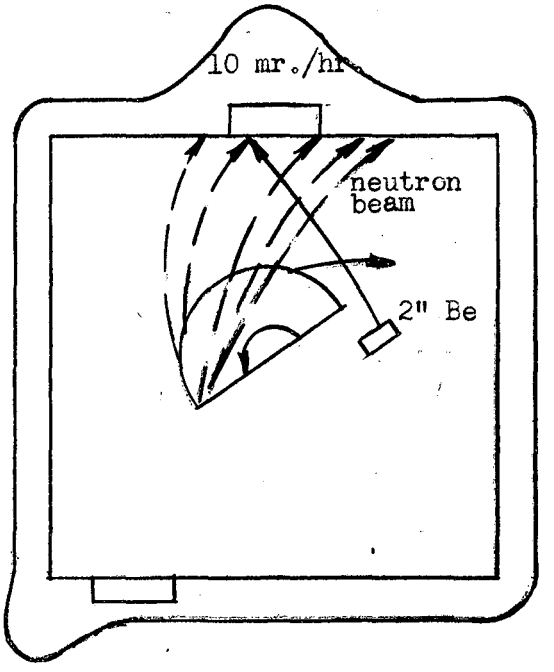

Figure 2. Radiation with Direction of Beam Reversed

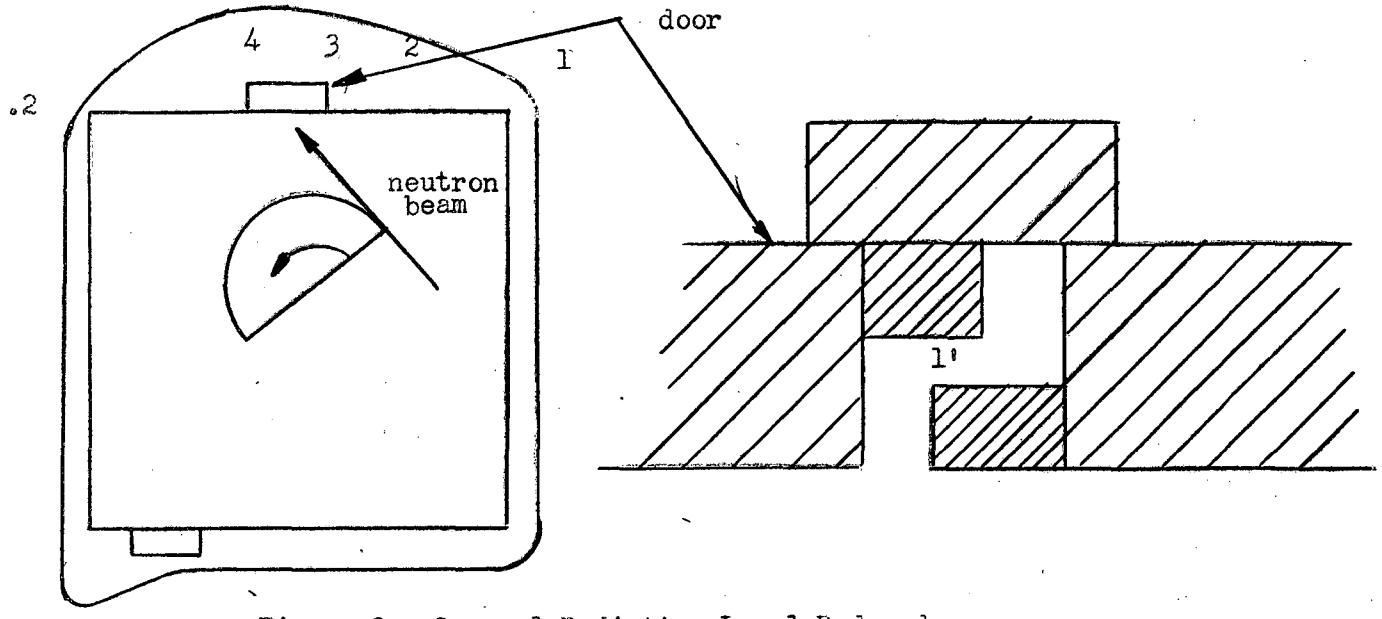

Figure 3. General Radiation Level Reduced by Additional Shielding in Doors

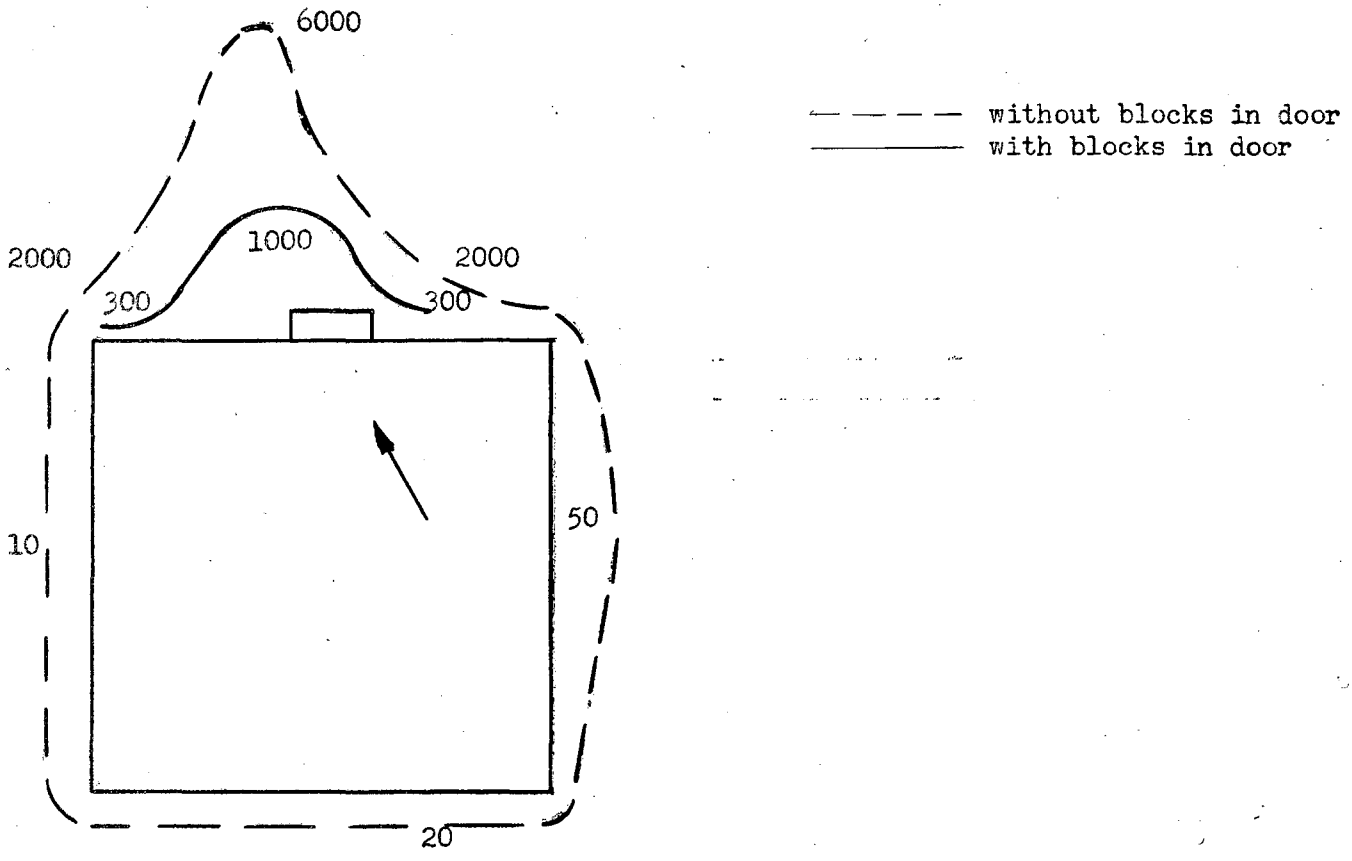

Figure 4. Fast Neutron Flux

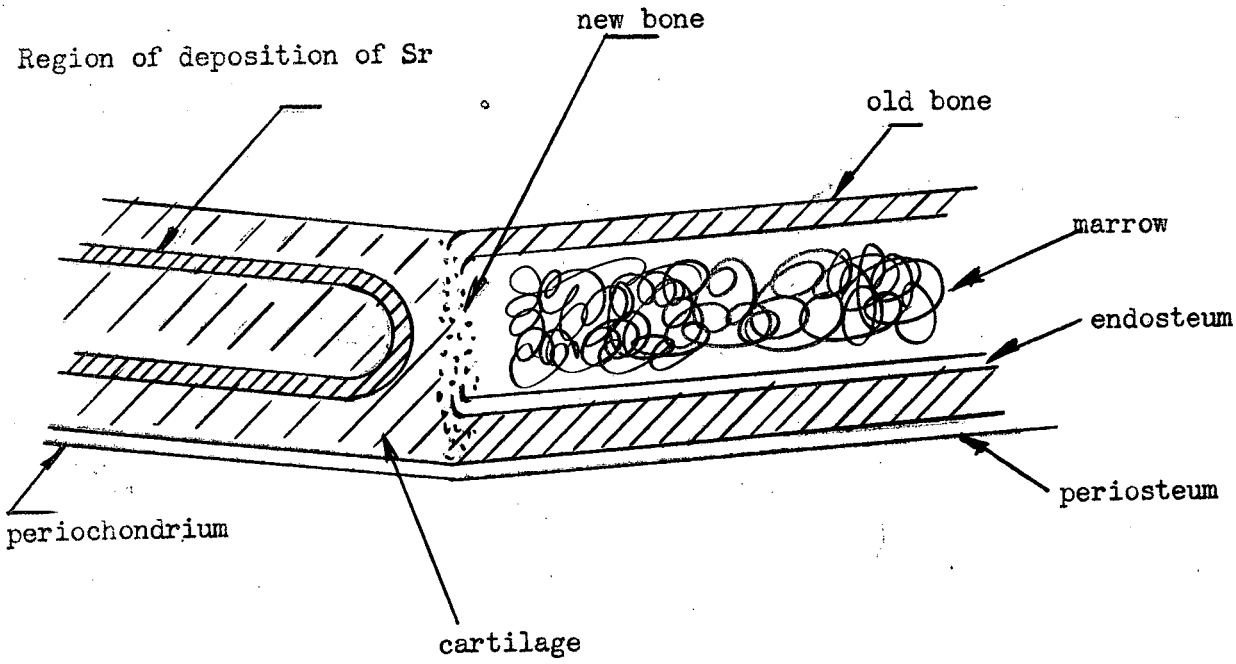

Figure 5. Deposition of Sr in the Costo-Chrondral Juncture

RESTRICTED

UNCLASSIFIED