UCRL 3014

UNIVERSITY OF CALIFORNIA

Radiation Laboratory

PHYSICS DIVISION QUARTERLY REPORT

February, March, April 1955

TWO-WEEK LOAN COPY

This is a Library Circulating Copy which may be borrowed for two weeks. For a personal retention copy, call Tech. Info. Division, Ext. 5545

DISCLAIMER

This document was prepared as an account of work sponsored by the United States Government. While this document is believed to contain correct information, neither the United States Government nor any agency thereof, nor the Regents of the University of California, nor any of their employees, makes any warranty, express or implied, or assumes any legal responsibility for the accuracy, completeness, or usefulness of any information, apparatus, product, or process disclosed, or represents that its use would not infringe privately owned rights. Reference herein to any specific commercial product, process, or service by its trade name, trademark, manufacturer, or otherwise, does not necessarily constitute or imply its endorsement, recommendation, or favoring by the United States Government or any agency thereof, or the Regents of the University of California. The views and opinions of authors expressed herein do not necessarily state or reflect those of the United States Government or any agency thereof or the Regents of the University of California.

UCRL-3014
Unclassified Physics

UNIVERSITY OF CALIFORNIA
Radiation Laboratory
Berkeley, California

Contract No. W-7405-eng-48

PHYSICS DIVISION QUARTERLY REPORT

February, March, April 1955

May 25, 1955

Some of the results reported in this document may be of a preliminary or incomplete nature. The Radiation Laboratory requests that the document not be quoted without consultation with the author or the Information Division.

Printed for the U. S. Atomic Energy Commission

PHYSICS DIVISION QUARTERLY REPORT
February, March, April 1955

Contents

GENERAL PHYSICS RESEARCH

Physics Research: Alvarez

Differential Cross Section for 31.5-Mev Protons 4
Angular Distributions of Charged Particles from 31-Mev Protons on Carbon 4
Bevatron Counter Experiments 5
Liquid Hydrogen Glaser Bubble Chamber 5

Physics Research: Barkas

Interactions of 4.5-Bev Negative Pions in Emulsion 7
Interactions of 5.7-Bev Protons in Emulsion 7
K-Meson Studies 7
τ-Meson Analysis 8
Angle and Energy Distributions of Charged Particles from the High-Energy Nuclear Bombardment of Various Elements . . . 8
Neutron Spectra from 200-Mev Proton Collisions with Various Nuclei 9
Interactions of 380-Mev Alpha Particles in Emulsion 9

Theoretical Group: Judd 12

Physics Research: Lofgren

$C^{12}(p, pn)\,C^{11}$ Cross Section at Bevatron Energies 15
Proton-Proton Scattering in the Bev Range of Energies 16
K-Particle Production 16
Interactions in Flight of K^+ Mesons 17
Exposure of a Stack 12 by 16 by 2 Inches 17
Production and Measurement of K Particles with Nuclear Emulsions 17

Physics Research: Moyer

Comparison of the Reactions $H^1(H^2H^3)\,\pi^+$ and $H^1(H^2He^3)\,\pi^0$ as a Test of Charge Independence 21
Pion-Proton Cross Sections 21
Total-Absorption Photon Spectrometer 22
Beta-Ray Spectroscopy 22
Nuclear Gamma-Ray Spectroscopy 23
Proton-Proton π^0 Production 23
Bismuth Fission Chamber 23
Photonic Decay of Heavy Mesons and Hyperons 23
Photodisintegration of the Deuteron 24

* Preceding Quarterly Reports: UCRL-2920, UCRL-2805

Cloud Chamber Studies: Powell

The Mechanism of the Reaction $p + O^{16} \rightarrow p + 4\alpha$ at 29 Mev . . . 25
High-Energy π^- - Proton Interactions 27

Physics Research: Richman 28

Research with the Spiral-Orbit Spectrometer: Sagane

Study of the Resolution of a Spiral-Orbit Spectrometer 28
Mu-Meson Positron Spectrum Measurement Using 180° Focusing . 37
Mu-Meson Positron Spectrum Measurement with the Spiral-Orbit Spectrometer 42
Proton Excitation Function on $\pi^{\pm}$ Production from Complex Nuclei 45
Developmental Research on the Spiral-Orbit Spectrometer . . . 45

Physics Research: Segrè

Polarization of Deuterons in Elastic Scattering from Complex Nuclei 46
Proton-Proton Polarization at 170 Mev 46
Phase-Shift Analysis of p-p Scattering 46
High-Energy Fission Cross Sections 47
K-Meson Mass from a K-Hydrogen Scattering Event 47
Identification of a θ^+ Meson 48
Study of K^- Stars 48
Interactions of 5.7-Bev Protons in Nuclear Emulsion 49

ACCELERATOR OPERATION AND DEVELOPMENT

Bevatron 50
184-Inch Cyclotron 50
60-Inch Cyclotron 52
Linear Accelerator 54
Synchrotron 54

PHYSICS DIVISION QUARTERLY REPORT

February, March, April 1955

Radiation Laboratory, Department of Physics
University of California, Berkeley, California

May 25, 1955

GENERAL PHYSICS RESEARCH

PHYSICS RESEARCH

Luis W. Alvarez in charge

DIFFERENTIAL CROSS SECTION FOR 31.5-Mev PROTONS

J. Leahy

The cross sections have been measured for silver, tantalum, and lead. These all exhibit the usual diffraction-pattern appearance, having four maxima approximately evenly spaced over the range of angles observed (10° to 140° for Pb and Ta, 10° to 170° for Ag). The pattern for Ta, however, is definitely "washed out" in comparison to Au and Ag.

ANGULAR DISTRIBUTIONS OF CHARGED PARTICLES FROM 31-Mev PROTONS ON CARBON

George J. Hecht

Angular distributions of several groups of charged particles resulting from the bombardment of carbon with 31-Mev protons have been obtained.

The angular distribution of elastically scattered protons is in good agreement with the prediction of the Born approximation at forward angles. Diffraction effects are compared to the results at lower energies and show that the angles for which they occur are not strictly proportional to $\lambda\!\!\!^{-}/R$ over the energy range 10 to 31 Mev.

The angular distributions of two inelastic proton groups from the reaction

$$p + C^{12} \rightarrow p' + C^{12*},$$

leaving C^{12*} with 4.43 Mev and 9.60 Mev excitation, have been analyzed in accordance with the theory of Austern, Butler, and McManus. The theory apparently is inadequate for the 4.43-Mev level, in which both total angular momentum and parity for initial and final states are known. The shape of the angular distribution of the scattered protons corresponding to the 9.60-Mev

level agrees with the theory and leads to an assignment of $J' = 0^-$, 1^-, or 2^-.

A deuteron group from the reaction

$$p + C^{12} \rightarrow d + C^{11}$$

has been identified and the angular distribution has been compared with the stripping theory of S. T. Butler by means of the principle of detailed balancing. The agreement found indicates that the ground state of C^{11} is characterized by $J = 3/2^-$.

BEVATRON COUNTER EXPERIMENTS

Luis W. Alvarez, Frank S. Crawford, Jr., Myron L. Good, and M. Lynn Stevenson

An experiment designed to measure the relative lifetimes, excitation functions, and energy spectra of the K and τ mesons was attempted. A magnet for the purpose of selecting K mesons of 300 Mev/c momentum was placed in the vertical well of the Bevatron straight section. A four-counter telescope was used to indicate the presence of a stopping heavy meson. The decay fragments were to be detected with two counters on each side of the counter in which the K mesons stopped.

The data were recorded both electronically and by means of oscilloscope photography. We were unable to detect any K mesons with the electronics. The film is now being scanned in hope that a K-meson effect can be found from the film data.

LIQUID HYDROGEN GLASER BUBBLE CHAMBER

Luis W. Alvarez's Group

During this quarter the effort on the liquid hydrogen bubble chamber has split into three major programs. The first of these is to operate the 4-inch chamber at the Bevatron with a magnetic field. The second is the construction of a chamber of 10-inch diameter, to operate in an existing magnet. The third is the engineering of a chamber 20 by 20 by 50 inches, along with suitable magnet and cryogenic facilities. In order to expedite this program, the assistance of the Boulder Cryogenic Laboratory of the National Bureau of Standards has been obtained. Two engineers from their staff have been sent to Berkeley, and further aid will be given at their laboratory. A program for measuring the physical properties of materials of construction, where such data do not exist, is being undertaken at Boulder.

Status of the Four-Inch Chamber

The original 4-inch chamber has been in operation on several occasions at the Bevatron, principally in the 4-Bev π^- beam. The major purpose behind these runs was to learn the techniques for successful operation and properties of the instrument. In one run, efforts were made to vary the operating conditions -- such as timing of beam pulse -- with respect to pressure release, temperature, illumination timing, etc, over wide limits. In this way the best operating regime was mapped out. Also the runs served as a test of the expansion system and electronic control system.

In the course of these runs several hundred stereo pictures were taken showing π^--meson tracks. Analysis of these pictures demonstrated that the tracks have exceedingly small deviations from straightness due to turbulence resulting from expansion. On those tracks having optimum light delay (1 to 3 msec after beam), no deviation from straightness larger than 0.2 mm was found. On most tracks there was no measurable deviation. If the 0.2-mm figure is taken as a sagitta, a momentum of $\frac{10 \text{ Bev}}{c}$ would be detectable with a 10,000-gauss field.

Analysis of the pictures, together with the data on operating characteristics, indicated that the chamber is capable of excellent work. It was found that some of the control and expansion components needed redesign to improve reliability, and these parts have now been rebuilt. In order to give charge and momentum analysis, pulsed Helmholtz coils that will produce 10,000 gauss through the chamber at the time of beam passage have been designed and made. A suitable capacitor bank and an ignitron control circuit for the coils has been completed. In order to reduce eddy-current heating of the chamber, the original brass chamber was replaced by one of stainless steel. It was necessary to use split clamp rings for the window seal and a 1/16-inch chamber wall to sufficiently reduce the heating.

It is expected that this chamber will be placed in operation at the Bevatron in May.

Status of the Ten-Inch Chamber

The ten-inch chamber is intended to serve both as a more powerful tool for research and as a model for the large chamber. An existing magnet, formerly used with the cloud chamber, is being adapted to this chamber. Because of the complication of mechanical design involved in reducing eddy-current heating in pulsed magnetic fields, it has been decided that initial operation will be with steady field. All the major components have been engineered and are in the shop, with the exception of the chamber proper. A test program to evaluate various arrangements for sealing windows to the chamber is under way. Some difficulties with this seal have been encountered. Seals based on lead and teflon gaskets are under test.

Status of the Fifty-Inch Chamber

Mechanical design and magnet design are under way. The window occupies a central position among the problems, and the assistance of the Corning Glass Company research department has been arranged. In addition, a window test program has been initiated at the Boulder Cryogenic Laboratory of the National Bureau of Standards. It is planned to evaluate both plastics and glass for the job. A major share of engineering effort has gone into the magnet, since this will be a "long-delivery" item. The design of the optical system has received attention because it is a controlling factor in the magnet design. It is presently thought that the chamber will operate in a steady magnetic field.

The engineering of cryogenic facilities is in progress. At present, a refrigerator using hydrogen as a working medium is favored. Such systems will be used both for the chamber and for the liquid-hydrogen storage dewar.

PHYSICS RESEARCH

Walter H. Barkas in charge

INTERACTIONS OF 4.5-Bev NEGATIVE PIONS IN EMULSION

Dora Sherman and Walter H. Barkas

Along-the-track scanning has been undertaken to determine the partial free paths for the various processes initiated by high-energy pions. The present value of the total mean free path of 4.5-Bev π^- mesons in emulsion is 41.2 ± 8.1 cm.

INTERACTIONS OF 5.7-Bev PROTONS IN EMULSION

Peter Giles

About 160 stars have been analyzed with regard to their prong-number distribution. On rescanning an area it has been found that the observer efficiency is not 100%, so that the mean free path of 44 cm found is probably an upper limit. In the area scanned twice, once under low power and once under high power, the free path was found to be 38 ± 5 cm.

Following the procedure that has been used in cosmic ray star studies, the average number and median of shower particles S, heavy prongs H, heavy and gray prongs, H and G, and total prongs T, are tabulated:

	S	H	H and G	T
Average	1.71	6.36	7.66	9.28
Median	1.00	4.33	4.38	7.00

"Shower" prongs include all tracks of nearly minimum grain density regardless of angle with respect to the primary.

This scanning has been carried out in emulsion exposed with the proton beam perpendicular to the emulsion.

K-MESON STUDIES

Frances M. Smith, Harry H. Heckman, and Walter H. Barkas

It has been found possible to provide additional collimation by using the K-meson beam of Kerth et al. so that a small momentum interval can be selected. Successful runs have been made for the determination of the masses of the various kinds of K mesons (classified according to the behavior of their secondaries) by ratio measurements of momentum and range.

To date, the scanning of emulsions exposed to the external K^+-meson beam has yielded 14 τ mesons of the type $\tau^+ \rightarrow \pi^+ + \pi^+ + \pi^-$, and two events undergoing the alternate mode of decay, $\tau' \rightarrow \pi^+ + \pi^0 + \pi^0$. The branching ratio of $\tau'/\tau = 1/7$ is a lower limit, as the classification of single secondaries from K^+-meson decay is not yet completed.

τ-MESON ANALYSIS

Harry H. Heckman

The τ mesons found in the well exposures, at 90° to the proton beam direction, have been analyzed. In five of the six events, the charges of the π-meson secondaries could be determined. The average Q of decay is 74.9 ± 0.4 Mev. Errors as calculated by internal and external consistency are compatible. The kinetic energies of the negatively charged pions are 14.7, 19.2, 22.4, 34.0, and 37.5 Mev. The range-energy relation was obtained from Vigneron's calculated data (extended by Barkas) and by use of a pion mass of 0.1487 Mp. Errors have been estimated for range straggling, observer error in range measurements (1%), and angle measurements (0.5°).

ANGLE AND ENERGY DISTRIBUTIONS OF CHARGED PARTICLES FROM THE HIGH-ENERGY NUCLEAR BOMBARDMENT OF VARIOUS ELEMENTS

Evan Bailey

Scanning and the reduction of data have continued on the analysis of secondary particles in the alpha and proton bombardments of various nuclei. Absolute cross sections have been obtained in the forward and backward hemispheres for the following bombardments and secondaries:

p on Al, p, d, alpha,

p on Ni, p,

p on Ag, p, d, alpha,

p on Au, p, d, alpha,

alpha on Al, p, d, alpha.

A comparison of the cross sections forward and backward, and a study of the shapes of the spectra, show the relative importance of the cascade and evaporation processes. For example, the secondary protons from the proton bombardment of Au appear to be due entirely to the cascade process.

The average excitation energy, i.e., the energy available for the evaporation process, can be calculated in two ways from these experiments as follows:

1. From the center-of-mass motion. The cutoff energies in the forward and backward spectra for the charged particles are different.

2. From an integration of the number of evaporation neutrons, protons, alphas, etc.

Barkas

NEUTRON SPECTRA FROM 200-Mev PROTON COLLISIONS WITH VARIOUS NUCLEI

Edward E. Gross

The results so far obtained on the low-energy neutron spectra from 200-Mev proton bombardment of various nuclei are as follows:

(a) The yield of neutrons from Ag in the energy range 0.5–10.0 Mev appears to be isotropic in the angular range of 45° to 135° in the laboratory system.

(b) No peak in the energy distribution of neutrons from Ag has been observed; it must lie below 1 Mev.

(c) The energy spectra of neutrons from Ag and Au do not agree with evaporation theory with a single temperature.

INTERACTIONS OF 380-Mev ALPHA PARTICLES IN EMULSION

Dora Sherman

The interactions with light nuclei in the emulsion have been separated and their characteristics studied. The frequency distribution of the number of prongs per star is shown by the circles in Fig. 1. For comparison the prong spectrum of all stars is shown (on a reduced scale) by the crosses and solid-line graph of Fig. 2. The average number of prongs per star from light nuclei is 4.2. (That from all stars is 3.3.)

The frequency distribution of black prongs from light nuclei shows a peak at three black prongs. This distribution is shown in Fig. 2.

Two interactions have been seen in which the remanent nucleus appears to undergo fission after the emission of several prongs. These are believed to be light nuclei, since the excitation energy is probably not great enough to cause fission of a heavy nucleus.

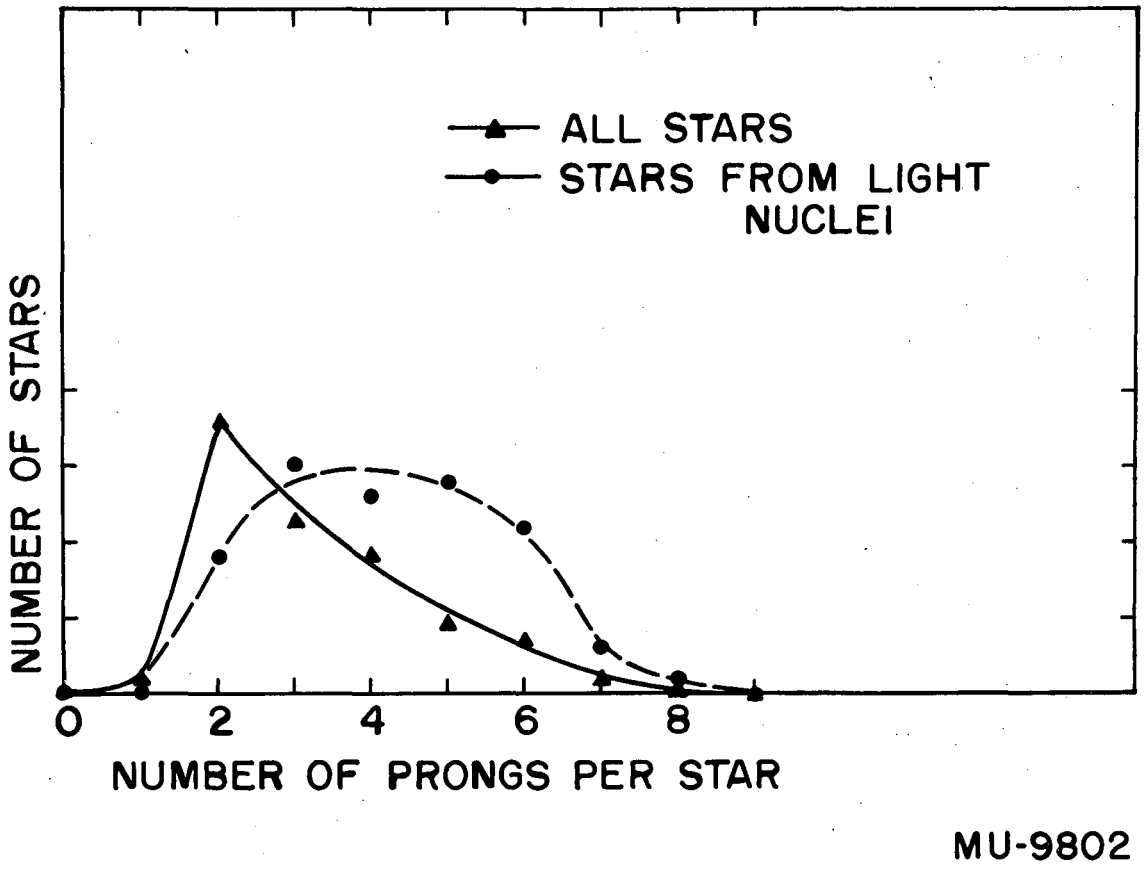

Fig. 1. Frequency distributions of the number of prongs per star.

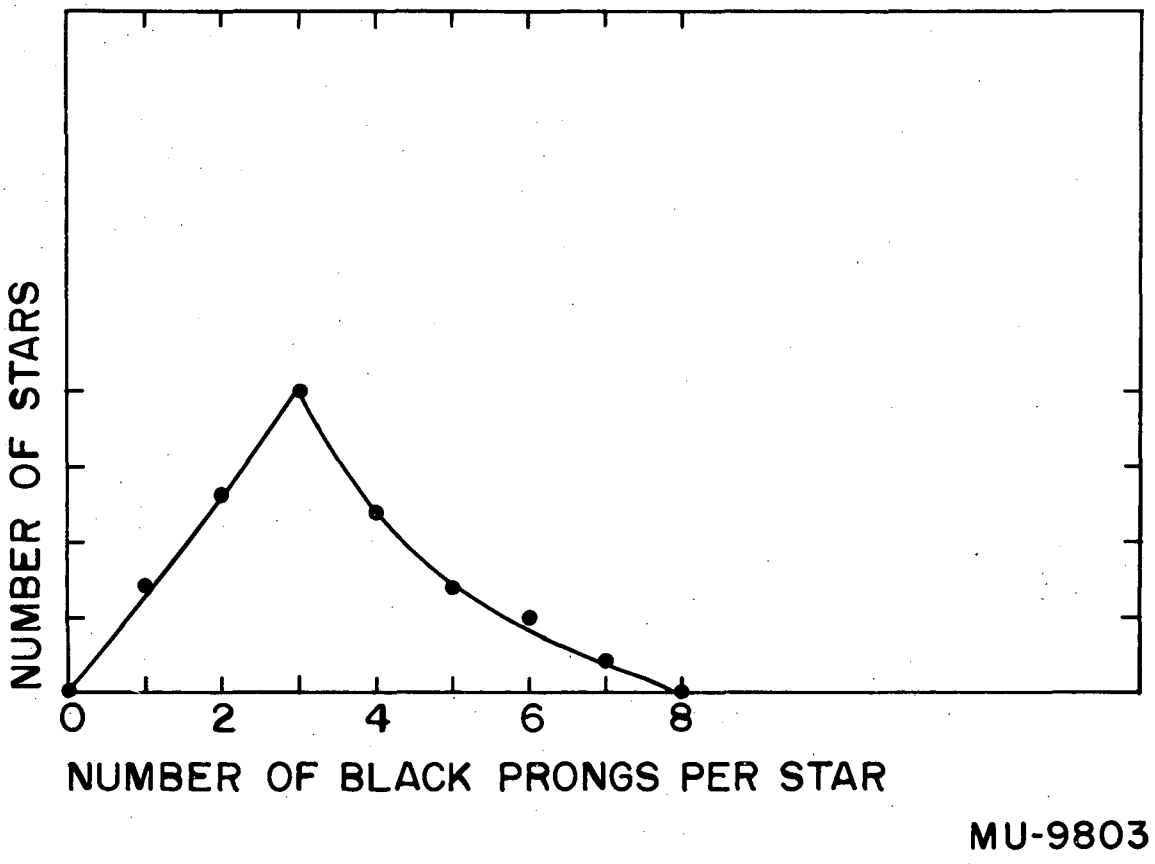

Fig. 2. Frequency distribution of black prongs per star from light nuclei.

THEORETICAL GROUP

David L. Judd in charge

The isotopic spin characterizing nuclei has hitherto been introduced somewhat artificially into the Dirac equation. An attempt has accordingly been made to construct a theory in which these quantities arise in a natural manner and are an integral part of the Dirac equation. Starting with an 8-component spinor it can be shown that there are 7 matrices $(\gamma\mu)^2 = 1$. Four of these are related to the conventional $\gamma\mu$'s and the remaining three are the additional $\gamma\mu$'s corresponding to the γ^5 in the equation of the electron. The seven-dimensional Dirac equation is written in a completely covariant form and is subsequently projected into a 4 space by means of an anholonomic coordinate system. This gives rise to various fields and coupling schemes in the four space. The interpretation of these is being currently investigated. (Maurice Neuman)

A phase-shift analysis of the p-p triple-scattering and polarization experiments was carried out using the MANIAC at Los Alamos. The phase shifts for $j \geqslant 4$ were assumed to be zero. By use of the Coulomb interference data a single best set of phase shifts was obtained from fifty-three original starting values. This solution was obtained four times out of the fifty-three attempts, indicating that it is not improbable that this is the best possible solution. (Henry Stapp)

A relativistic theory of polarization of Dirac particles has been developed. At the cyclotron energy there are corrections to the nonrelativistic triple-scattering formulas of about 10%. (Henry Stapp)

The theory of polarization for the scattering of spin-one particles from spin-zero targets has been developed and applied to the deuterium double scattering. Present experiments indicate that the spin-orbit coupling for the 160-Mev deuterons is about twenty-one times the Thomas term. The coupling needed for nucleons of 360 Mev appears to be about twenty times the Thomas term. (Henry Stapp)

The nuclear many-body problem is being studied by an approach that leads to self-consistent field equations for the wave functions of the individual particle model, and circumvents certain of the difficulties encountered by a perturbation treatment in the presence of Majorana exchange forces. These exchange forces have been treated by introducing into the self-consistent field equations an effective mass whose value, for either a Yukawa or Gaussian two-nucleon potential with the well parameters of Blatt and Jackson, ranges from ~ 0.40 M for a pure Majorana force to ~ 0.70 M for a Serber mixture. This is the effective mass for nucleons near the bottom of a degenerate Fermi distribution; the value increases with increasing particle energy. (William M. MacDonald)

The identities derived from a lagrangian density that is invariant under transformations that depend on arbitrary functions have been used to develop the restrictions on allowed forms of meson-nucleon coupling that follow from assuming extended isotopic spin invariance. A proof has been given that invariance under local isotopic spin rotations is not possible for

pions and nucleons alone. The relations between the transformation law and the invariant lagrangian are derived if (a) the pion-nucleon system is allowed to admit a more general extended group, or (b) additional fields are admitted in order to maintain the local isotopic spin rotational invariance. Only additions transforming linearly in the gradients of the arbitrary functions in the transformation law are admissible if the ordinary isotopic current is to be preserved. A paper has been submitted to the PHYSICAL REVIEW. (S. Bludman)

Work on Tomonaga's method of treating the many-fermion problem and its connection with nuclear matter is continuing. (Alfred Reifman)

The restrictions on the allowed decay schemes of heavy mesons and hyperons imposed by conservation of spin and parity are being studied for various assumptions as to the spins and parities of these particles. (D. A. Holland)

Work has been started (with M. Rich) on the prediction of ground-state spins of heavy nuclei. (Alfred Reifman)

Work is continuing on a review article on formal perturbation theory. Another article has been completed which shows how field-theory renormalization problems can be handled in a natural fashion within the framework of formal scattering theory. (B. S. DeWitt)

A paper is being written on a generalized effective range theory of scattering, which completely defines the nucleon-nucleon scattering in terms of a set of generalized logarithmic derivatives which are locally energy-independent when evaluated at a characteristic distance r_0. A consequence of the theory is the specific model of Lomon and Feshbach, which is successful in fitting all nucleon-nucleon scattering to 250 Mev. (Robert Raphael)

Work on the nature of the nucleon-nucleon potential, as determined from scattering data, is being continued. It has been found that singlet S-wave nucleon scattering over the energy range 0 – 50 Mev implies a potential in this state which is repulsive having a core radius $\sim .3 \times 10^{-13}$ cm. The work was reported in a paper at the Washington meeting of the American Physical Society. Calculations on a more accurate treatment, which will use the scattering data up to energies of the order of 250 Mev to determine a better approximation to the nuclear force, have been completed. Preliminary runs to determine the potential depth at a set of nine radial points have been made on the Univac. (Robert Raphael)

A formalism has been constructed which attempts to relate the charge independence of nuclear forces to the particular form of the meson-nucleon coupling. Pions are not directly coupled to nuclear matter, according to this scheme, but are indirectly coupled via a vector field of isotopic spin one and a scalar field of isotopic spin two. (B. DeWitt and J. V. Lepore)

A study of published intermediate coupling calculations of meson-nucleon scattering (especially charged scalar) was made, coming to the conclusion that they contain no advance over other methods of calculation. (C. Goebel)

Judd

High-energy pion-proton experimental results are being studied, with especial attention to the elastic scattering. (C. Goebel)

The resolving power of the Spiral-Orbit Spectrometer is being investigated by analytic methods and by use of the differential analyzer, especially for the geometry used by Sagane and Dudziak in their measurement of the μ-electron decay spectrum. Axial oscillations, their effect on the resolution, and possible methods of damping them have also been considered. (A. Garren and D. Judd)

A paper is being written on the effects of Coulomb interference in high-energy proton-proton scattering and polarization experiments. (A. Garren)

The combined effect of ionization loss and bremsstrahlung on the energy loss of high-energy electrons passing through thin targets is being examined. (Warren Heckrotte)

Work has been completed on the calculation of heat of vaporization of helium at 0°. The heat of vaporization of helium has been calculated by the cell method using a Lennard-Jones potential, and utilizing the Monte Carlo result that the zero-point kinetic energy of a gas of Boson rigid shperes agrees well with the simple cell theory if an effective mass of 0.7 is used. The calculation gave a heat of vaporization of 7° per atom for He^4, in excellent agreement with experiment. The method also checks for He^3, even though not well justified theoretically. This probably is due to the fact that the hard core of the interatomic potential already prevents overlap without the exclusion principle. There may also be some anti-alignment of neighboring spins so the spatial wave-function is closely symmetric. (M. Rosenbluth)

The work on the dynamics of an ionized medium initiated last quarter has been completed. The approximation of describing the state of the system by the coefficients of a one-particle Fokker-Planck equation was made, and these coefficients were calculated by a perturbation method which specifically excluded from consideration the nearest neighbors . It was found that the perturbation method converges rapidly, and its extrapolation to include the nearest neighbors is still good enough to agree with the results of a collision-theory treatment. (S. Gasiorowicz, M. Neuman, and R. J. Riddell, Jr.)

A study of the iteration procedure suggested by Dalitz and Ravenhall for the Tomonaga approximation in charged scalar theory and work on the numerical calculations involved in both the first and second iterations is being continued. (Kent Curtis)

PHYSICS RESEARCH*

Edward J. Lofgren in charge

$C^{12}(p, pn)C^{11}$ CROSS SECTION AT BEVATRON ENERGIES

Joe Murray, Walter Crandall, and Nahmin Horwitz

In this experiment a plastic scintillator serves as the carbon target. The number of C^{11} atoms is determined by measuring the β^+ activity in the target with a scintillation counter. The efficiency of this counter has been measured to be 96 ± 2% by the β-γ coincidence technique.

The number of protons incident on the target is measured by the following two methods:

I. The target is sandwiched between two emulsions. Total bombardment is kept sufficiently low (approximately $4 \cdot 10^6$ protons/cm^2) so that the number of proton tracks can be counted.

II. The target is looked at by a photomultiplier, the integrated output of which has been correlated with the number of protons passing through the target.

One Bevatron run at 4 Bev has been made, using Method I. The raw data give a preliminary value for the cross section of 33 mb. The data have not been corrected for the effects of secondary protons and neutrons, which may contribute to the β^+ activity in the target, the number of tracks in the emulsion, or both. (We think the correction will not exceed ± 20%.)

For Method II, preliminary attempts to correlate the integrated output from the photomultiplier with the total number of protons passing through the target were unsuccessful. Further attempts to obtain this relationship will be made. If Method II works it will be relatively easy to get an excitation curve for the $C^{12}(p, pn)C^{11}$ reaction over the range of Bevatron energies. This would be quite tedious with Method I.

As a part of the instrumentation for Method II an electronic device has been built permitting measurement of pulse-height distributions with high "density of information" per Bevatron pulse. The pulse output of a photomultiplier is integrated to form a stairstep wave form which is mixed with a coarser stairstep wave form or flyback signal of opposite polarity; the latter is generated from the mixed signal by a trigger circuit. The mixed signal is photographically recorded from a scope presentation. One frame covers a time interval ~2 milliseconds so that the vertical rows of stairsteps appear on the scope as vertical rows of dots. The time resolution of the system is 50 mμsec and the spot resolution is such that ~1000 dots or pulses may be recorded on one frame. Random pulse rates up to 500 kc may be recorded effectively. Pulse-height distributions are obtained by measuring the vertical distance between dots.

*Including material for the period November 1954—January 1955.

PROTON-PROTON SCATTERING IN THE Bev RANGE OF ENERGIES

Bruce Cork and W. Wenzel

The differential cross section for the scattering of 2-Bev protons has been measured roughly at 90° in the center-of-mass system and observed to be less than one millibarn/steradian. The targets have been polyethylene, 1 by 1 by 3 inches, and carbon, 1 by 1 by 1.4 inches. The background from carbon is of the order of 10% when the 90° coincidence method is used.

The angular spread of the coincidence protons is 3° full width at half intensity. Most of this width is due to the finite target size and detector size, 1 by 1 inch. At present smaller targets are being used to improve the geometrical resolution of the detecting counter telescopes.

In order that data can be obtained at a faster rate, additional detectors and coincidence channels have been built and are operating. Quadruple coincidences with a resolving time of less than 5×10^{-9} second are obtained with only crystal diodes used in the critical circuits.

The signal from the induction electrode has been used with an integrator so that an absolute measurement of the number of incident particles can be made. Necessary improvements in the tuned amplifier and relay circuits have been made and a new shielded electrode with guard rings will permit accurate calibration of the beam. One measurement of the cross section at 3.1 Bev near 90° (center of mass) has been made. The background was high, probably because of the relatively larger proportion of inelastic events at higher energies. The cross section at 3.1 Bev is of the same order of magnitude as at 2.0 Bev.

K-PARTICLE PRODUCTION

Warren W. Chupp, Sulamith Goldhaber, Gerson Goldhaber, William R. Johnson, and Francis H. Webb

A study is in progress on the production of K particles as a function of the proton bombarding energy. Preliminary work has been carried out with stripped emulsion stacks exposed to the focused K beam.[1] K particles were observed at 90° to the proton beam incident on a Cu target. The stacks were placed in a momentum channel of 350 Mev/c ± 5%.

A summary of the preliminary results is given in Table I. The numbers quoted are normalized to an integrated flux of 10^{12} protons on a 1-inch copper target.

Table I

	Exposure to Positive Particles			Exposure to Negative Particles	
Proton Energy	K^+/cm^2	τ^+/cm^2	π^+/cm^2	K^-/cm^2	π^-/cm^2
6.2 Bev	123±15%	8.2±40%	8.7×10^3±5%	2.7±30%	1.84×10^4±5%
4.8 Bev	110±15%	8 ±40%	5.6×10^3±5%	---	---

[1] Kerth, Stork, Birge, Haddock, and Whitehead, Bull. Am. Phys. Soc. 1955, Washington Meeting, Paper P1.
Lofgren.

The respective fluxes for K^+, K^-, and τ^+ were obtained by selecting tracks on the basis of their ionization at 4 cm of their residual range and following these particles to the ends of their ranges. In this fashion an unbiased sample of the particles was selected. The π^+/π^- ratio is still being investigated. The low value quoted above may be partly due to the interaction of the Bevatron field with the focusing magnet when the latter is reversed to obtain negative instead of positive particles. K/π ratios are independent of such effects.

INTERACTIONS IN FLIGHT OF K^+ MESONS[2]

Warren W. Chupp, Sulamith Goldhaber, William R. Johnson, Gerson Goldhaber, Joseph E. Lannutti, and Ehsan Helmy

By following K-particles along their track, one is able to observe their interactions in flight. About 50 interactions have been observed so far. The analysis of the interactions and the determination of the mean free path is still in progress. It is interesting to observe, however, that all interactions are comprised of (a) elastic scatterings, (b) inelastic scatterings, (c) disappearance in flight, and (d) small stars where preferably one low-energy proton prong is emitted. These interactions show that the rest energy of the K^+-meson does not appear in visible prongs, which may indicate that charge exchange into a K^o occurs. Such a phenomenon is in agreement with the Pais, Gell-Mann theory.

EXPOSURE OF A STACK 12 BY 16 BY 2 INCHES[2]

Sulamith Goldhaber, Gerson Goldhaber, and Joseph E. Lannutti

A large stack of a dimension to stop secondaries of the $K_{\mu 2}$, $K_{\pi 2}$, and $K_{\mu 3}$ has been exposed in the focused K^+ beam. The exposure was carried out at 90° to the incident proton beam. The center of the stack was placed in a momentum channel of 350 Mev/c. The stack is now being processed.

PRODUCTION AND MEASUREMENT OF K PARTICLES WITH NUCLEAR EMULSIONS

Warren W. Chupp, Sulamith Goldhaber, Gerson Goldhaber, Stephen J. Goldsack[3], Joseph Lannutti, Francis H. Webb, and Frances M. Smith

Work on the emulsion stacks exposed at 4.8 Bev, 5.7 Bev, and 6.1 Bev in the direct beam and in the external re-entrant well has been continued.[4] A total of 35 K-particles and 5 τ-mesons have been found. In Table II the mass measurements on 22 of these K-particles as well as $p\beta$ and ionization measurements, when possible, are given. The errors quoted in the mass measurements do not include possible systematic errors.

---

[2] This work is done in conjunction with A. Pevsner and D. Ritson, Mass. Institute of Technology, Cambridge, Massachusetts.

[3] Now at the Physics Department, University of Birmingham, England.

[4] Physics Division Quarterly Report, August - October 1954, University of California Radiation Laboratory Report No. UCRL-2805.

Table II

Mass Measurements on K particles in emulsions exposed to Bevatron beam						
Particle	Primary Mass (m_e)		Secondary			
	I-R	Const. Sagitta	Dip Angle	P/β	b/b_p	I/I_o
K_1	1010±30[a]	895±230	28°			
K_2		700±180	0°	189±25	0.89±0.04	
K_3	815±70[a]	940±250	44°			
K_4	935±30[a]	880±230	4.5°	185±20	1.14±0.06	
K_5	960±30[a]	880±200	26°	150±30	1	
K_6	950±100[a]	1460±370	56°			
K_7	820±60[a]		17°			
K_8	875±40[a]	1010±280	0°	56±8	0.968±0.04	
K_9	975±50[a]	1320±350		No secondary found		
K_{10}	990±45[a]		7°	135±22		1.16±0.05
K_{11}	940±125[b]					
K_{12}		795±190				
K_{13}	845±80[b]		18°			
K_{14}	1035±70[b]	690±170	17°			2.48±0.05
K_{15}	1053±80[b]		43°			
K_{16}	940±40[b]		15°			
K_{17}	835±65[b]		83°			
K_{18}	875±70[b]		63°			
K_{19}	930±45[b]		26°			
K_{20}	890±45[b]		24°			
K_{21}	880±65[b]		3°	160±20		1.19±0.03
K_{22}		1280±330		135±24		1.17±0.07
Weighted average	936±10					

[a] Grain count versus range
[b] One minus integral gap length versus range

From the $p\beta$ and ionization measurements, the secondary of K_8 was uniquely identified as an electron. The secondary of K_{14} can be interpreted as either a π from the alternate decay of the τ meson ($\tau^+ \rightarrow 2\ \pi^0 + \pi^+$) or a slow μ from the decay of a $K_{\mu 3}$. No secondary was found for K_9. All the other K-meson secondaries are consistent with L mesons or electrons. A more definite identification would be possible only if a sufficient track length of the secondary were available.

In the 2.5 cm^3 of emulsion scanned, 34 K particles (presumably positive) have been found with a single charged secondary. Only K_9 might be interpreted to be a negative K particle, however, since no secondary has been observed. Table III gives the measurements made on the τ mesons found.

Table III

Particle	Mass D·M	Emission Angle	Energy	Parent Star	Secondaries [x]				
						Charge	Energy	Angles [y]	Q Mev
τ_1		~88°	36 Mev	11 + 3p 5.7 Bev	a b c	(+) (+) -	(46) (29.5) 7.3	160° 66° 132°	82.8
τ_2	1220±420 (C.S.)	~90°		In Target 4.8 Bev	a b c	(+) - +	(45.0) 22.9 7.2	164.8° 44.4° 152.1°	75.1
τ_3	952±45 (I-R)	~49°	82 Mev	18 + 8p 5.7 Bev	a b c	 + 	(33.5) 28.0 (16.5)	140° 112° 108°	78.0
τ_4	932±55	~90°		In Target 6.1 Bev	a b c			177° 96° 87°	
τ_5				5.7 Bev	a b c	 +	(39.0) (17.5) 14.8	145.8° 72.2° 142.0°	71.3

[x] $E_a \geqslant E_b \geqslant E_c$

[y] Angles given are a^b, b^c, and c^a

PHYSICS RESEARCH

Burton J. Moyer in charge

COMPARISON OF THE REACTIONS $H^1(H^2He^3)\pi^0$ AS A TEST OF CHARGE INDEPENDENCE

Kenneth C. Bandtel, Burns Macdonald, and Burton J. Moyer

The period from January to June has been spent trying to develop a counter that will have uniform pulse-height resolution over an area of about 2 by 10 inches. A counter design has been developed that gives uniform response to a beta source over this entire area. A 5819 photomultiplier tube looks down a tapered sheet-metal light pipe that is coated with magnesium oxide on the inside, and then around a corner at the face of the scintillator. The energy-loss requirements are such that the scintillators are too thin to pipe light out the edge and have a uniform response over the surface.

It is planned to test the resolution of these counters using He^3 and H^2 particles from the 184-inch cyclotron. If this is successful, a run will then be made with the deuterium liquefier.

PION-PROTON CROSS SECTIONS

Burton J. Moyer, Hoyt A. Bostick, Kenneth C. Bandtel, Roger W. Wallace, and N. Fredrick Wikner

Since the beginning of the Bevatron operation it has been possible to measure the total cross section for high-energy negative pions in collision with protons at two different pion energies. These measurements were made by the attenuation of the pion beam with carbon and CH_2. The beam definition and measurement of beam transmission through the attenuators were accomplished with a quadruple coincidence system of scintillation counters.

Pions originating in the Bevatron target and emerging in the forward direction therefrom were magnetically analyzed by a portion of the Bevatron quadrant field through which they passed, and a portion of this fanned-out pion emission was further analyzed by a bending magnet, so that the momentum spread of the pion beam defined by the counter chain was nominally 0.1 Bev/c.

The first counter of the counter chain was 43 feet from the target and the last counter 68 feet from the target. The position of the attenuator, between the second and third counters of the chain, was varied over a sufficiently wide range to allow exploration of the effects of multiple Coulomb scattering of the pions and of the nuclear diffraction of the pions. The first effect tends to produce an unwanted loss of counts in the last two detectors, whereas the second effect causes an apparently high transmission. Since these diffraction-scattered particles contribute to the total cross section, they should be lost to the final counters.

By variation of the attenuator position the acceptance angles for the final counters were made to range from 0.8° up to 3.5°, and the effects of Coulomb scattering and diffraction scattering could both be identified and corrected for.

Cross-section values obtained to date are as follows:

For 3.2-Bev pions $\sigma = 26 \pm 3$ millibarns,
and for 4.4-Bev pions $\sigma = 24 \pm 2$ millibarns.

TOTAL-ABSORPTION PHOTON SPECTROMETER

John M. Brabant, Malvern H. L. Jester, Roger W. Wallace, and Robert J. Cence

Construction and assembly of the total-absorption photon spectrometer and related equipment has been completed, and preliminary studies of its performance have been made.

The device is designed so as to detect either photons or electrons that are incident with energies above some limiting value with essentially 100 % efficiency. Consisting basically of a large cylinder of transparent lead glass in which the incoming photon initiates a shower, and four large phototubes which detect the Cerenkov light radiated by the cascade electrons, the counter is equally effective for either electrons or photons, as the detection process is the same for both. A fourfold coincidence arrangement insures that tube-noise pulses are rejected. A ten-channel differential pulse-height analyzer is used to obtain the pulse spectrum of events occurring in the counter.

By use of monoenergetic electrons obtained from the synchrotron photon beam and resolved by a strong magnetic field, the relative pulse-height spectrum of the counter has been investigated as a function of the energy of the incident electrons. Results obtained to date indicate that within the estimated experimental uncertainties the instrument has an approximately linear response from 42 to 319 Mev, with a resolution of about 30% above 200 Mev. The pulse-spectrum peak positions for monoenergetic electrons were reproducible to a much greater precision.

A large-area scintillation counter is being constructed to be used in anticoincidence in front of the spectrometer to insure that charged particles are not counted when photons are being studied. Other electronic improvements are being effected in an attempt to increase the energy resolution and reproducibility of the spectrometer. The instrument will be used in the very near future to investigate the photons obtained at the Bevatron. It is expected that the device will be useful for photon energies considerably above the region already investigated.

BETA-RAY SPECTROSCOPY

Roger W. Wallace and Selig N. Kaplan

Considerable difficulty was encountered in obtaining reproducible data with the fast-coincidence circuit. The counting arrangement was therefore again revised. The two counters were run at a lower voltage (~1200 v), with their signals fed into UCRL linear amplifiers, variable gates, and an eight-channel quadruple mixer in the standard series arrangement.

A trial run was made on May 6 and 7 using Al^{27} to see the Si^{27} decay. The electronics and the solenoid absorber charges operated satisfactorily,

and a superficial inspection of the data indicated that we may be able to proceed with the intended measurements.

NUCLEAR GAMMA-RAY SPECTROSCOPY

Harlan C. Shaw, Charles N. Waddell, and H. Adelson

A run was made at the Linac to investigate the excitation function for production of the 15.2-Mev gamma line by proton bombardment of carbon. In order to reduce background problems, the 3-by-3-inch NaI(Tl) crystal was placed in the shed behind the usual bombardment area, and surrounded by layers of Pb, Cd, and paraffin. However, the Al absorber used to reduce the proton energy caused mounting background problems at energies under 20 Mev. As a result, the gamma line has been seen only down to about 17 Mev (c.m.) proton energy. Energetically this rules out the possibility of the line's arising from an excited level in C around 20 Mev, or any excited level in Be.

The energy determination of the line by the crystal technique is about 1 Mev lower than the quoted value obtained by the pair spectrometer. As the pair spectrometer was calibrated against the 17.6-Mev gamma from Be^{8*}, and these data were just recently rechecked, the pair spectrometer value is considered to be reliable. It seems possible that the current being drawn by the photomultiplier tube on the 15-Mev gamma pulses was too large for maximum stability.

It is planned to continue the excitation function down to lower energies, and to improve the energy determination by the crystal technique.

PROTON-PROTON π^0 PRODUCTION

Robert K. Squire and Robert J. Cence

Experimentation has continued on the problem of the angular distribution and excitation function of neutral mesons produced by collisions of protons from the 184-inch cyclotron with protons in liquid hydrogen. A new method has been used which allows the subtraction of background and events due to neutrons. An excitation function has been obtained that is accurate to about 10%.

BISMUTH FISSION CHAMBER

Roger W. Wallace, Robert R. Hart, and H. Wade Patterson

A bismuth-fission ionization chamber designated the CR-5 has been completed, and it has performed satisfactorily as a detector of high-energy (greater than 50-Mev) neutrons. The CR-5 contains 29 mg of bismuth evaporated on approximately thirty square feet of 0.0019 aluminum foil. The total capacitance is 15 $\mu\mu$f; 5000 volts is required to operate it.

The construction of a similar chamber to contain about 60 mg of bismuth with similar features has been started.

PHOTONIC DECAY OF HEAVY MESONS AND HYPERONS

John Osher and Sherwood Parker

Calculations based on assumption of associated production in

nucleon-nucleon collisions and essentially the Fermi model for the momentum distribution in the reaction were undertaken to determine the expected number and energy spectrum of photons seen at 90° to the Bevatron beam downstream from a target. The calculations were largely numerical in nature and were carried out for regions of different distances downstream from the target. In preliminary runs this counting rate has been roughly checked.

PHOTODISINTEGRATION OF THE DEUTERON

Dwight R. Dixon and Kenneth C. Bandtel

Differential cross sections have been measured at laboratory angles from 36° to 141° and at photon energies from 136 Mev to 293 Mev. The angular distributions in the center-of-mass system have appreciable isotropic $\sin^2\theta$ and $\cos\theta$ components. The total cross sections are of the order of 70 μb, with some indication of a maximum in the vicinity of 250 Mev. Further details of the experiment are presented in a UCRL publication now in preparation.*

Another synchrotron run has been scheduled to reduce the statistical errors on the cross sections referred to above. Preparations are also being made to measure the cross sections at 0° and 180° by the use of a magnet to deflect the protons out of the beam.

---

* Dwight R. Dixon, "Photodisintegration of Deuterons at High Energies" (Thesis), University of California Radiation Laboratory Report No. UCRL-2956.

CLOUD CHAMBER STUDIES

Wilson M. Powell in charge

THE MECHANISM OF THE REACTION $p + O^{16} \rightarrow p + 4\alpha$ AT 29 Mev*

Oscar C. Kolar

Oxygen gas in a 16-inch expansion-type cloud chamber has been bombarded by 29-Mev protons at the linear accelerator. The proton energy was determined by a careful measurement of the radius of curvature of the protons in an accurately known magnetic field. The energy was determined to be 28.9 ± 0.5 Mev with no noticeable variation from run to run.

A search was made for events of the type $O^{16} + p \rightarrow p' + 4\alpha$, which manifest themselves in the appearance of four heavily ionizing tracks plus a fifth lightly ionizing track. Frequently only four prongs were visible, the fifth prong being obscured by the beam. In such cases a fifth prong may be fabricated and its position in space, its energy, and its momentum calculated.

Two hundred and twelve such events were identified and found to satisfy the criteria of momentum and energy balance. If but four prongs were visible an additional requirement was that the fifth prong be located in an obscured region of the chmber.

Energy determination for most of the alphas was on the basis of a carefully constructed range-energy relation. For protons, this measurement was usually made on the basis of magnetic curvature, the magnetic field being provided by the horizontal Helmholtz coils in which the cloud chamber was situated. Stereoscopic projection of the cloud chamber pictures also allowed the space angles of the individual prongs to be measured.

An attempt has been made to identify the mechanism by which the reaction proceeds. The first indication as to the correct interpretation was provided by the appearance itself of an appreciable percentage of the events. It was noted that frequently alpha pairs were emitted which had a very small angular separation. This indicated the participation of the ground state of Be^8, which releases 96 kev in its decay. Accordingly a calculation of possible excitation energies for intermediate Be^8 nuclei was performed. This calculation was done for each possible pair of alphas in each event, resulting in six values per event. Of the 212 events, 103 exhibited values for $E^*_{Be} < 0.5$ Mev. These were considered to represent events in which the ground state of Be^8 occurred. In addition, there were five events that gave two such values, corresponding to opposite alpha pairs, and are probably to be interpreted by the scheme $O^{16} + p \rightarrow p' + 2Be^8$; $Be^8 \rightarrow 2\alpha$.

The E^*_{Be} values for the alpha pairs opposite to the alphas giving $E^*_{Be} < 0.5$ Mev were plotted in histogram form. If the mechanism were $O^{16} + p \rightarrow p' + Be^{8*} + Be^8$ this histogram should represent the level structure of Be^8. It did not. The possibility of the mechanisms

(a) $O^{16} + p \rightarrow p' + 2\alpha + Be^8$,
(b) $O^{16} + p \rightarrow p' + \alpha + C^{12*} \rightarrow \alpha + Be^8$

* A condensation of the thesis published under this title as UCRL-3012

was investigated by plotting the observed energy distribution (in the center of mass of the system p + O^{16}) of the first two alphas and comparing it with the distribution predicted on the basis of available phase space. Agreement was satisfactory with either possibility.

To distinguish which of the above two was the correct interpretation (if, indeed, either was), possible values of the excitation energy E_c^* of intermediate C^{12} nuclei were computed. The distribution of the E_c^* values failed to show any significant peaks.

The possibility of the participation of Li^5, B^9, and N^{13} as intermediate nuclei was also considered by calculation of the corresponding excitation energies. Again there did not appear to be any significant contribution from the various levels of these nuclei. Consequently it would appear that the predominant mode for the breakup for those events exhibiting the presence of Be^8 in the ground state is

$$O^{16} + p \rightarrow p + 2\alpha + Be^8,$$

with or without the formation of a compound nucleus. If a compound nucleus was formed, it apparently did not obey the predictions of compound nucleus theory, since the forward-to-backward ratio of protons in the center-of-mass system was 1.5 ± 0.2.

Again, possible C^{12}, Li^5, and B^9 excitation energies were calculated, and no significant structure was observed in the distribution of the calculated values of the excitation energies.

For these events (that is, not involving the Be^8 ground state) it would appear that the predominant mode of decay is expressed by

$$O^{16} + p \rightarrow p + 4\alpha.$$

It is interesting to note that these results are the analogs of the results obtained in the photodisintegration of oxygen,[1]

$$O^{16} + \gamma \rightarrow 2\alpha + Be^8,$$

and $$O^{16} + \gamma \rightarrow 4\alpha,$$

although other mechanisms have been proposed.[2,3]

Another very interesting feature of these results was the appearance of a large number of low-energy protons (29 protons had energy less than 1 Mev).

1. C. H. Millar and A. G. W. Cameron, Can. J. Phys. 31, 723 (1953).
2. F. K. Goward and J. J. Wilkins, Proc. Phys. Soc. 63A, 1171 (1950).
3. D. L. Livesy and C. L. Smith, Proc. Phys. Soc. 66A, 689 (1953).

HIGH-ENERGY π^- - PROTON INTERACTIONS

Wilson Powell, George Maenchen, and Robert W. Wright

Additional runs have been made in the 4.5-Bev/c π^- beam from the Bevatron, using the 36-atmosphere hydrogen-filled diffusion cloud chamber. To date 96 π^--proton interactions producing charged outgoing prongs have been observed in 87,000 meson traversals of the chamber. This corresponds to a cross section of 19.9 ± 3.4 millibarns, where the error includes both the statistical uncertainties and uncertainties of effective path length. There has been no correction for μ contamination, which is believed to be small.

These 96 events are of the following types:

Eighteen events are elastic scatters whose angular distribution fits that expected for diffraction scattering from an opaque sphere of radius 7.9×10^{-14} cm.

Forty-six events are inelastic, having two charged outgoing prongs. This corresponds to production of one or more additional mesons. Three of these events involve the production of heavy unstable particles (one θ^0, one Λ^0, and one charged decaying prong which cannot be identified but is not a π meson).

Thirty events have four outgoing charged prongs (production of two or more additional mesons). In one of these events one of the prongs has been identified as a K^+ meson.

Two events have 6 prongs and correspond to production of four or more mesons.

PHYSICS RESEARCH

Chaim Richman in charge

A summary of the work on K mesons for this quarter appears as UCRL-2973. In addition the decay distribution of τ-mesons is being analyzed. Further data on K-meson masses are being obtained from a second emulsion stack exposed with an improved momentum resolution for the strong-focusing spectrometer.

RESEARCH WITH THE SPIRAL-ORBIT SPECTROMETER

Ryokichi Sagane in charge

STUDY OF THE RESOLUTION OF A SPIRAL-ORBIT SPECTROMETER

Ryokichi Sagane, Walter F. Dudziak, and James Vedder

The resolution of the spiral-orbit spectrometer was studied by use of a vacuum chamber and an α-ray source. Technically we were able to obtain good statistical accuracies throughout these studies. However, we missed some minute details of such a resolution study because of the inaccuracy in the dimensions of the active deposit and also because of the heterogeneous distribution of intensity of the activity.

In general, the results obtained are in good agreement with the calculations made by Drs. Kotani and Iwata. The calculations show that the resolution curves of a spiral-orbit spectrometer are mainly defined by the ratio of the target radius, r_o, and the radius of the critical orbit ρ, that is by r_o/ρ.

As is shown in Fig. 3, theory says that the width $\Delta B\rho$ between the peak of the resolution curve and the shoulder on the low-energy side of this curve is $(2\, r_o/\rho)\, B\rho$, if the resolution is plotted versus $B\rho$. Table IV gives a comparison of the theoretical (calculated) value of this ratio with the experimental value obtained from our α-ray calibration measurements.

It is true that the resolution depends also on the magnetic field distribution (this dependence is expressed by κ or n where $n = -\frac{R}{B}\frac{\partial B}{\partial R}$ and $\kappa^2 = \frac{2}{n-1}$) and on the radial width 2d of the detector (the center of the detector is located on the critical orbit ρ). But the influences of these two factors on the resolution are expected theoretically to be small. This is particularly true for the geometry selected for the $\mu^+ \rightarrow e^+ + \nu + \nu$ experiment, for which nearly the same shape of resolution curve is predicted for small changes of these two factors. Experimentally we have checked this theoretical prediction by intentionally changing the field distribution near the critical orbit (i.e., by increasing κ by roughly 15%), and also by changing the width of the detector.

We have also found that by using a slit system close to the detector, one can cut down the high-energy-tail contribution to the resolution curve. Such slit systems, however, also significantly cut down the intensity. These points are illustrated in Fig. 4, where we show the resolution curves obtained

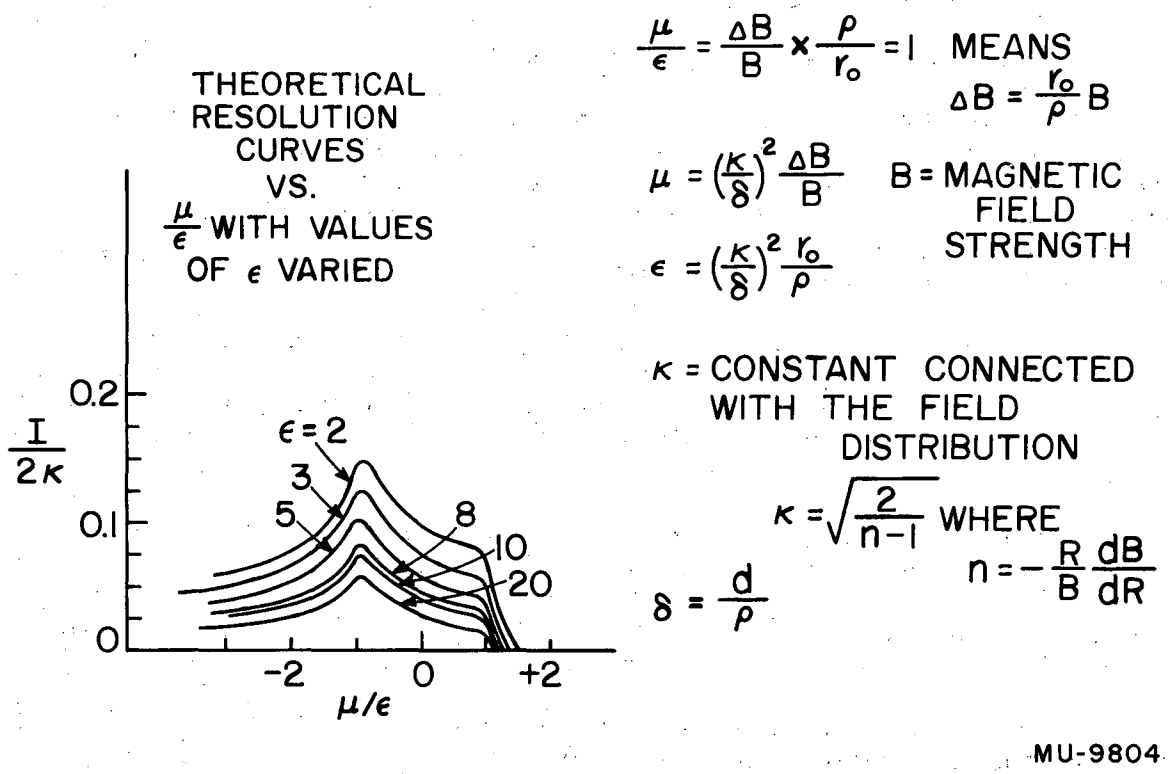

Fig. 3. Curves of theoretical resolution vs μ/ϵ for various values of ϵ and no slit near the detector. The calculation of these curves is based on the assumptions: (1) particles of velocity v start from the surface of a cylinder of radius $r = r_0$; these particles are emitted uniformly in all directions from this surface in the plane $z = 0$; (2) a detector of radial width 2d is set so that its center coincides with the circumference of the circle of convergence; (3) the probability that the emitted particle may be collected by the detector is $\Theta/2\pi$, where Θ denotes the central angle within which the particle stays in the annular region defined by two concentric circles of radius $\rho - d$ and $\rho + d$ (ρ is the radius of the circle of convergence).

Table IV

ϵ	r_o setting	Effective r_o corrected for a source dimension and positioning	Theory $2\, r_o/\rho$ (percent)	Experiment γ in percent. To be compared to $2\, r_o/\rho$
10	0.188"	0.23"	1.87	1.89
16	0.313	0.36	2.92	2.90
21	0.437	0.47	3.82	3.87
22	0.500	0.53	4.30	4.23
45	1.000	1.03	8.40	7.80

γ : Width between the main peak and the shoulder of the experimental resolution curve

r_o : Target radius of cylindrical surface (variable)

ρ : Radius of the critical orbit = 24.6 in.

$$\epsilon = \left(\frac{K}{\delta}\right)^2 \frac{r_o}{\rho}$$

$$K = \sqrt{\frac{2}{n-1}} \qquad \text{where } n = -\frac{R}{B}\,\frac{\partial B}{\partial R}$$

n or K = parameters defining the magnetic field distribution

$$\delta = \frac{d}{\rho} \qquad 2\,d = \text{detector width radially}$$

Sagane

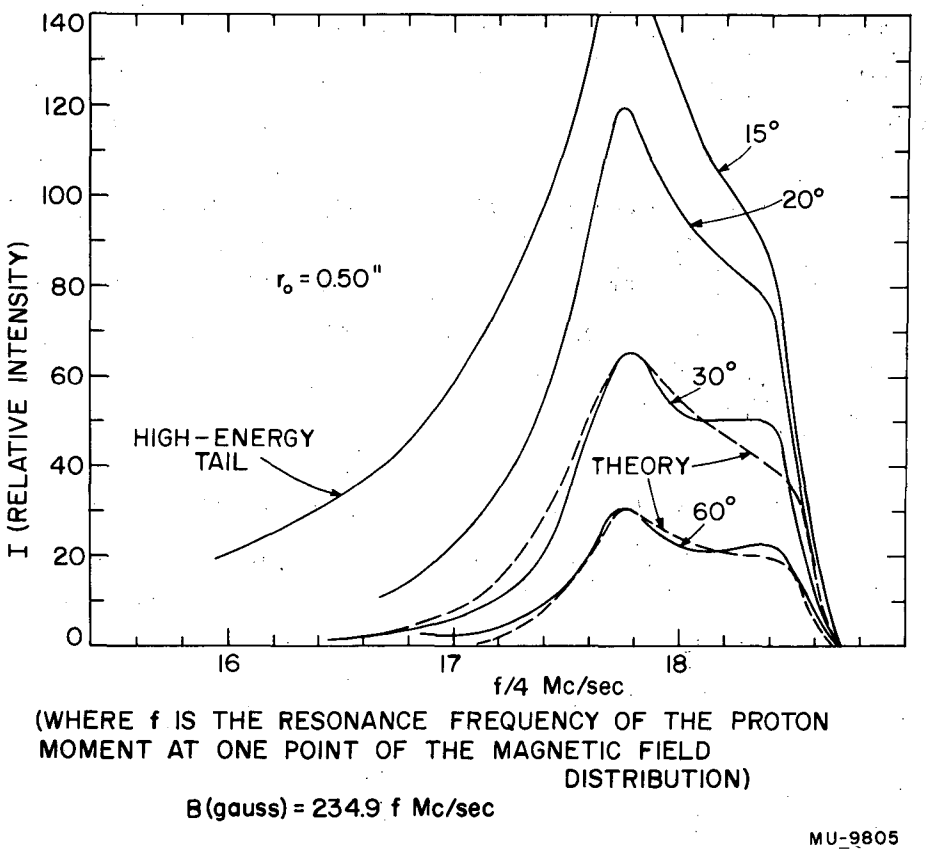

Fig. 4. Solid lines: Experimental resolution curves showing the effect on the resolution of a concentric slit of a given angular width (defined by the central angle that each slit subtends) and located near the detector (i.e., at r = 21 inches). These resolution curves are for a monoenergetic alpha source emitting uniformly in all directions from the surface of a cylinder of r_0 = 0.50 inch into a region of full z aperture used in the $\mu^+ \rightarrow e^+ + \nu + \nu$ experiment.

Dotted lines: theoretical curves calculated on the same assumptions as used for the curves in Fig. 1 (i.e., for particle motion in the median plane defined by the plane z = 0) for slits having angular widths of 30° and 60°. These are superimposed for comparison.

experimentally with concentric slits of various angular widths in front of the detector. The angular widths of the slits, expressed in degrees, are the measure of the central angle that each slit subtends. Figure 4 also illustrates the theoretically calculated resolution curves for concentric slits corresponding to a 30° and a 60° slit width. To permit comparison of the theoretical with the experimental curves the intensities were normalized at the peaks. The deviation that occurs at the shoulder on the low-energy side between the theoretical and experimental resolution curves is understood as due to the effect of vertical focusing. The theoretical curves were calculated for no vertical focusing.

A few particulars that are not calculated from the theory were checked experimentally. They are:

1. How critical are the location and shape of the defining slit system? For this determination resolution curves were measured for the different slit conditions that were created by 1-inch displacements of the leading edge of a 20° concentric slit radially inward and outward from the circle whose radius r = 21 inches. It was found that such displacements are not critical in determining the width of the resolution curve. As can be expected a radial displacement of the leading edge of the slit by one inch inward mainly decreases the intensity peak relative to the intensity at the shoulder on the low-energy side. An outward displacement of one inch significantly decreases the intensity at all points. The shapes of the resolution curves were found to be distorted greatly, but the width of the resolution curve remained the same, since this width is mainly governed by the ratio of r_o/ρ.

The slit we used for the μ-meson positron spectrum was not concentric. The reason for this choice is brought out by the above experiment as well as by a direct measurement of the resolution curve for the chosen slit system, that is, it allowed more particles of proper momentum to enter the detection system than a concentric slit, for the same contribution of the high-energy tail. Figure 5 illustrates this point by showing a typical resolution curve of a slit used in the μ-meson positron experiment that was obtained for a source having a cylindrical shell radius r_o = 0.500 inch. Shown also are a theoretical and an experimental resolution curve for a 60° concentric slit that contributes the same high-energy tail.

2. What is the effect of having a slit system outside the critical orbit? A 30° concentric slit was added at r = 25.5 inches, i.e., at the radial point defined by the junction of the scintillator and the lucite light pipe. The resolution curves obtained with this additional slit were the same as those obtained without it.

3. What are the resolution curves for a cylindrical target? Since we have studied the shape of the resolution curve for cylindrical shell targets of different radii, we are able to numerically calculate resolution curves for hollow or solid cylindrical targets having homogeneous activity. Figure 6 illustrates two such curves, one for a solid cylindrical target having r_o = 0.250 inch and the second for a solid cylindrical target having r_o = 0.500 inch. These resolution curves are practically the same curves as we assumed in the reduction of our published data (Phys. Rev. 95, 863-864 (1954)).

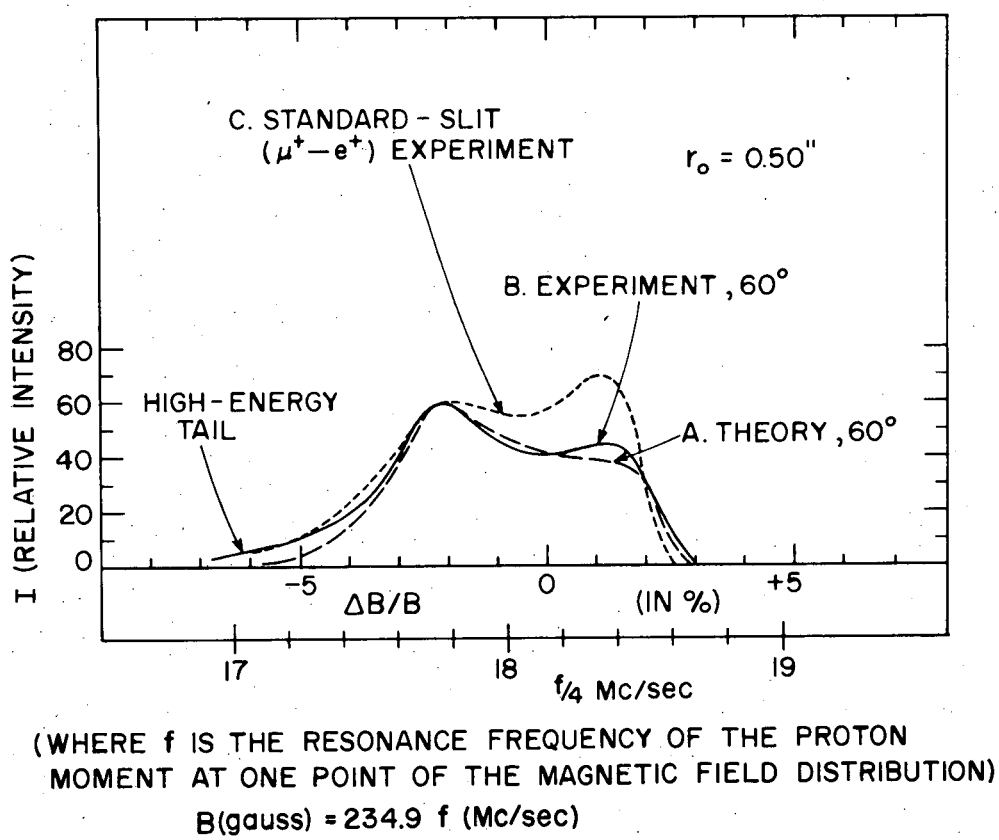

Fig. 5. Comparison of resolution curves for a monoenergetic alpha source emitting uniformly from a cylindrical surface of r_0 = 0.50 inch. (A) a theoretical calculation of particle motion in the median plane (i.e. the plane defined by z = 0) for a 60° angular slit width, (B) an experimental measurement for a 60° angular slit width with a full z aperture, (C) an experimental measurement for the slit used in the measurement of the positron spectrum from the decay of the mu meson with a full z aperture. Here H (gauss) = 234.9 f (Mc/sec), where f is the resonance frequency of the proton moment at one point of the magnetic field distribution.

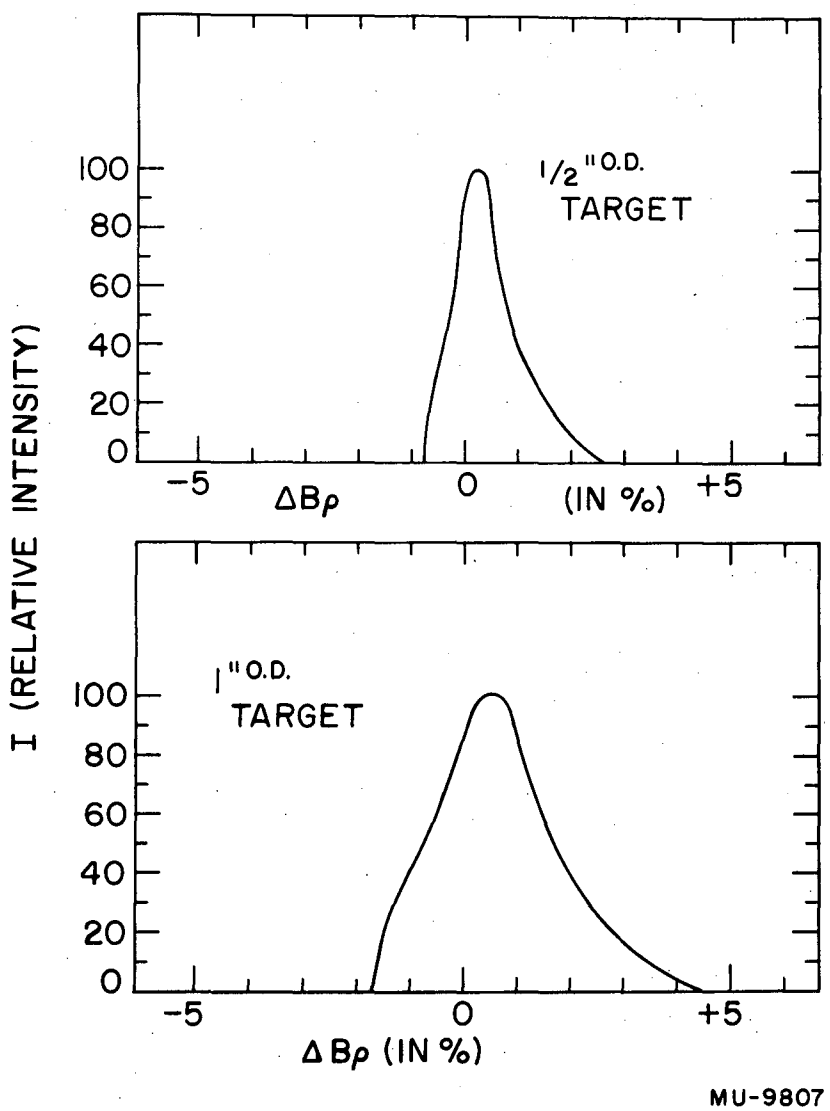

Fig. 6A and 6B. Resolution curves for a solid cylindrical rod of homogeneous activity, obtained by folding together the cylindrical surface data from the alpha-particle calibration experiment. These are for targets having (1) the full z dimension (2) the full z-aperture and (3) the slit system, the same dimensions as used in the experiment of measuring the positron spectrum from the decay of the mu meson.

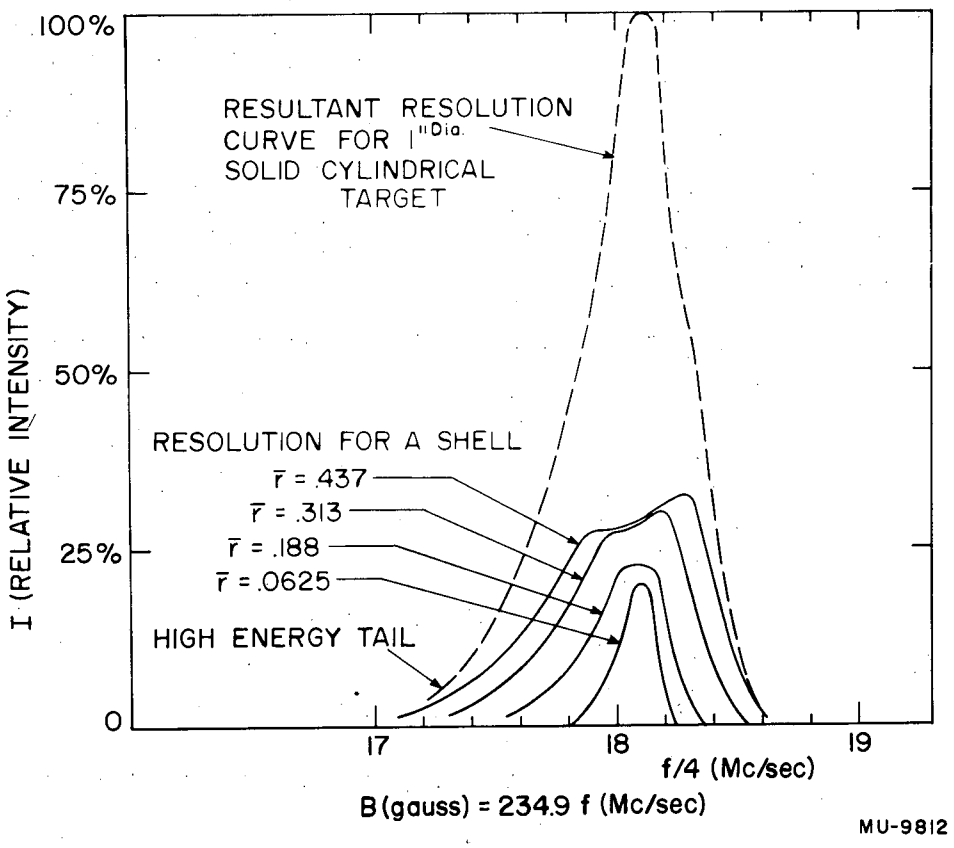

Fig. 6C. Procedure for obtaining a resolution curve for a solid cylindrical target of homogeneous activity. (1) For simplicity in illustration, target is divided into the following four shells (1" O. D. with 3/4" I. D., 3/4" O. D. with 1/2" I. D., 1/2" O. D. with 1/4" I. D., and 1/4" O. D. rod). (2) Experimentally measured resolution for a cylindrical surface whose radius is the mean radius of the shell is weighted by volume factor. (3) Resultant resolution is obtained by adding the contribution of each shell.

The alpha-calibration experiment also proved that a change in the angle of emission α is equivalent to a change in r_o and follows the prediction of the theory, according to which the resolution is dependent on

$$\left\{\frac{\Delta B}{B} + \frac{r_o}{\rho} \sin \alpha\right\}.$$

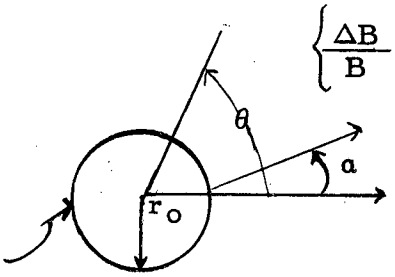

(cylindrical shell source)

We have obtained experimentally many examples that prove that the angle of emission α enters into the expression of the resolution only as the product of $r_o \sin \alpha$.

Furthermore, with the aid of a small alpha-particle detector, we were able to check the period of vertical oscillation relative to the angular revolution θ of the emitted charged particles. We found this period of oscillation to be the same as is predicted by the theory of Drs. Kotani and Iwata.

During the calibration experiment special efforts were devoted to study of the effects of (A) detector position and (B) vertical focusing, as these factors had not been included in the above-mentioned theoretical calculations.

(A) A series of resolution curves was obtained for the various possible combinations of the following variables:

1. different radii r_o of the cylindrical source;
2. different radial positions of the α-particle detector, both above and below the median plane;
3. different source positions, i.e., above, below, or on the median plane.

Comparison of these resolution curves shows that a displacement of the detector by ± 1.5 inches from the normal position (i.e., from ρ = 24 inches where the center of the detector was placed) resulted only in a shift of the resolution curve; this shift was ± 0.55 % of the magnetic field setting. This means that the accuracy of the detector position is roughly 1/11 as important to the resolution, to the accuracy of r_o. This is one of the very special characteristics of a spiral-orbit spectrometer.

(B) For the study of vertical focusing we have decreased the vertical aperture by using axially symmetric baffles having a slit opening of 1.5 inches at a radius r = 9 inches. The aperture was kept constant while its vertical position was varied, so that measurements were obtained with the aperture position above, below, and at the median plane. For each position of the 1.5-inch concentric aperture, measurements were obtained for sources whose radii were 0.188 inch, 0.500 inch, and 1.000 inch. For each position of the aperture and each source radius, measurements were made with the source placed above, below, and on the median plane. For each position of the aperture, each source radius, and vertical displacement, resolution curves were obtained for detector locations above and below the median plane.

Because of the diverging magnetic-field distribution of a spiral-orbit spectrometer, a vertical focusing of up to $\phi_z = 15^o$ could be observed by a variation of the described parameters.

For a cylindrical shell source having $r_o = 0.500$ inch we have numerically folded together all measurements from this series of experiments so as to produce a resolution curve for an extended target, a wide-open aperture, and a detector area 1.5 inches (in the radial direction) by 3 inches. Within our experimental error this numerically folded resolution curve was the same as we obtained during our measurement with the same target and detector dimensions and with a wide-open aperture. We present this curve in Fig. 7. A curve obtained with a restricted vertical aperture is also plotted in Fig. 7 for the purpose of comparison. For this comparison curve the cylindrical radius of the source is the same. This curve, however, is for a smaller aperture, detector size, and source height. It corresponds to the case where the source is located at the median plane, a 1.5-inch aperture is placed at r = 9 inches, and the detector size is 1.5 by 1.5 inches. One can therefore clearly see that the resolution for the geometry chosen for the μ-meson positron spectrum experiment did not have a long extended high-energy tail. The experimentally observed tail was similar to that predicted by the theory for a concentric slit having an angular width of 60°.

μ-MESON POSITRON-SPECTRUM MEASUREMENT USING 180° FOCUSING

Ryokichi Sagane, Walter F. Dudziak, and James Vedder

In order to determine if some unknown systematic error was introduced into our measured μ-meson positron spectrum as obtained with the spiral-orbit spectrometer, we made a measurement of this spectrum using the 180° focusing properties of a uniform-magnetic-field spectrometer. The measurements from our first trial agreed within statistical accuracy with the spiral-orbit results, and were presented in a previous quarterly report, UCRL-2805. Since that time another 180° magnetic-focusing experiment on the μ-meson positron spectrum, with targets located outside the main magnetic field, was reported by Dr. Crowe of Stanford; it disagreed with our spiral-orbit spectrometer results and the results of our 180° focusing experiment. To check this point of disagreement we tried to reconstruct spectrometer conditions similar to those used in the Stanford experiment. Our geometry in imitation of the Stanford experiment is shown schematically in Fig. 8. The principal differences between this 180° focusing experiment and our earlier experiment are as follows:

(a) The target was placed in a weak magnetic field outside the main field of the spectrometer (i.e., approximately 4 kilogauss rather than 10 kilogauss).

This minimized the "fly-back effect", i.e., eliminated most of the positron contribution due to very-low-energy pions that are emitted by the target and are returned to the target because of their motion in a magnetic field. As a result the number of μ-meson endings in the target was not sensitive to a change in magnetic field.

(b) This spectrometer had a better resolution and -- since our magnetic field settings were made by measuring the resonance frequency of

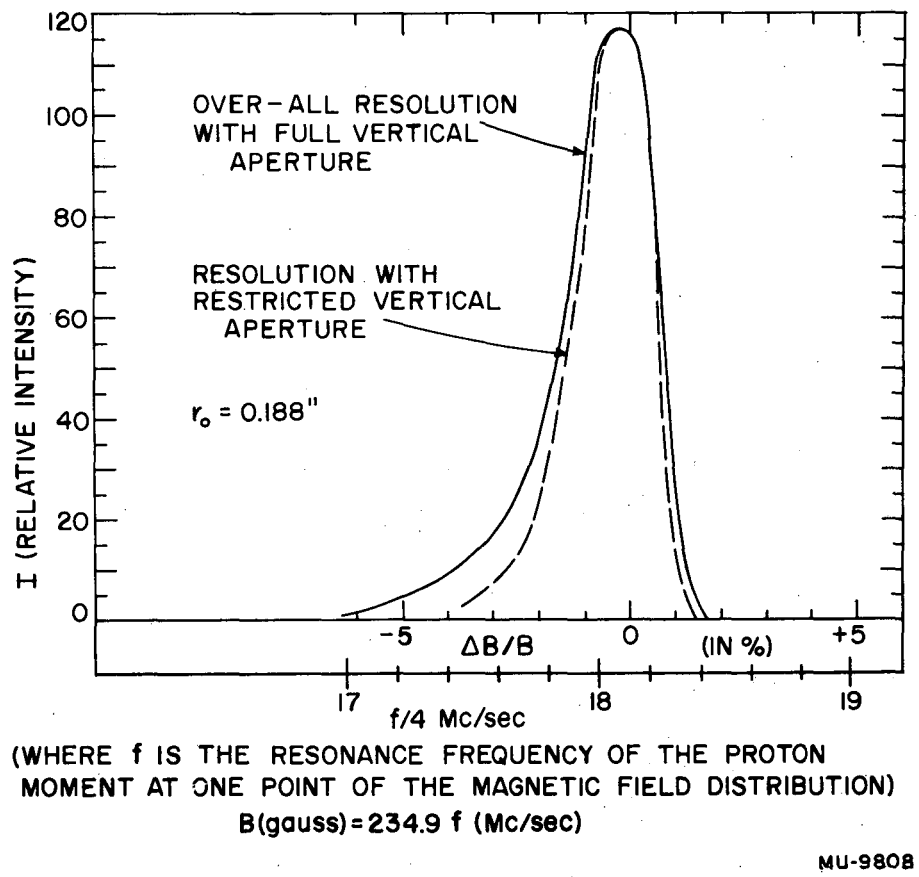

Fig. 7. Effect of z focusing on the resolution curves obtained experimentally from a monoenergetic alpha source emitting uniformly in all directions from the surface of a cylinder of r_0 = 0.188 inch for the slit system used in the $\mu^+ \rightarrow e^+ + \nu + \nu$ experiment. The solid curve is for a source that is of full size in the z direction, for the entire detector area, and for full vertical aperture. The dashed curve is for a source restricted in the z-direction, for one-half the detector area, and for a restricted vertical aperture.

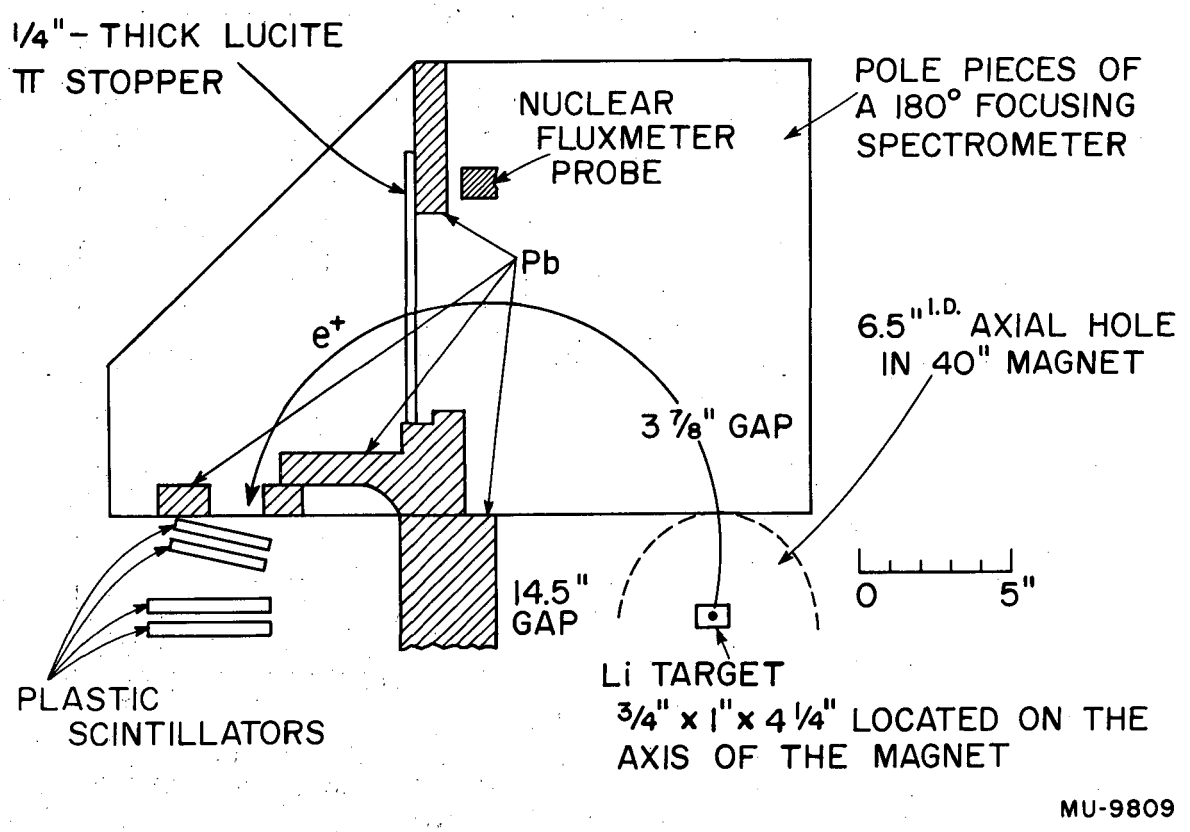

Fig. 8. Schematic diagram of geometry we used to approximate the Stanford experiment in which the 180° focusing properties of a uniform magnetic field spectrometer are used.

the proton moment -- we improved the accuracy of the positron energy setting.

(c) Targets were of lithium and carbon 3/4 inch thick. For the case of lithium it eliminated the need of correcting the data for radiation loss of positrons in the source. This correction was also very small for the case of carbon.

(d) More attention was paid to electronic stability and accuracy of the monitored proton beam. This improved the reliability of the low counting rates.

Our preliminary analysis of the results obtained from this experiment is shown in Fig. 9.

As can be expected, the determination of the resolution curves for this geometry is more complicated than in our earlier 180° focusing experiment, since the magnetic field near the target and the detector is heterogeneous. We could, however, estimate the resolution curves with good enough accuracies by using the analog computer for charged-particle trajectories in magnetic fields that was constructed by Dr. Bayard Rankin. Furthermore, the ionization loss and straggling of electrons of 20 to 60 Mev is fairly well known when the amount of absorption is less than 1 Mev. Therefore the reduction of at least the lithium data can be made without much ambiguity.

Four different measurements were made. These were:

(a) Lithium target (0.75 by 1 by 4 in.) with a spectrometer mean radius $\bar{r}$ = 7.1 in.

(b) Lithium target (0.75 by 1 by 4 in.) with a spectrometer mean radius $\bar{r}$ = 8.2 in.

(c) Carbon target (0.75 by 1 by 4 in.) with a spectrometer mean radius $\bar{r}$ = 7.1 in.

(d) Carbon target (0.75 by 1 by 4 in.) with a spectrometer mean radius $\bar{r}$ = 8.2 in.

All four measurements gave different slopes for the spectrum when plotted against $B\rho$ setting. When the absorption and resolution corrections were made, however, the four measurements gave the same positron spectrum within the accuracy of the measurements.

Because of the small solid angle that this spectrometer subtends the number of counts per monitor unit was relatively small while the background was relatively high. As a result, the accuracy of these measurements was poor compared with the accuracies one obtains with a spiral-orbit spectrometer. The over-all results are good enough, however, to establish that the ρ value for the μ-meson positron spectrum (as defined by Dr. Michel) is not larger than 0.4. Actually our preliminary reduction of these data gives the value of $\rho = 0.21 \pm 0.10$, which is in rough agreement with all our previous measurements.

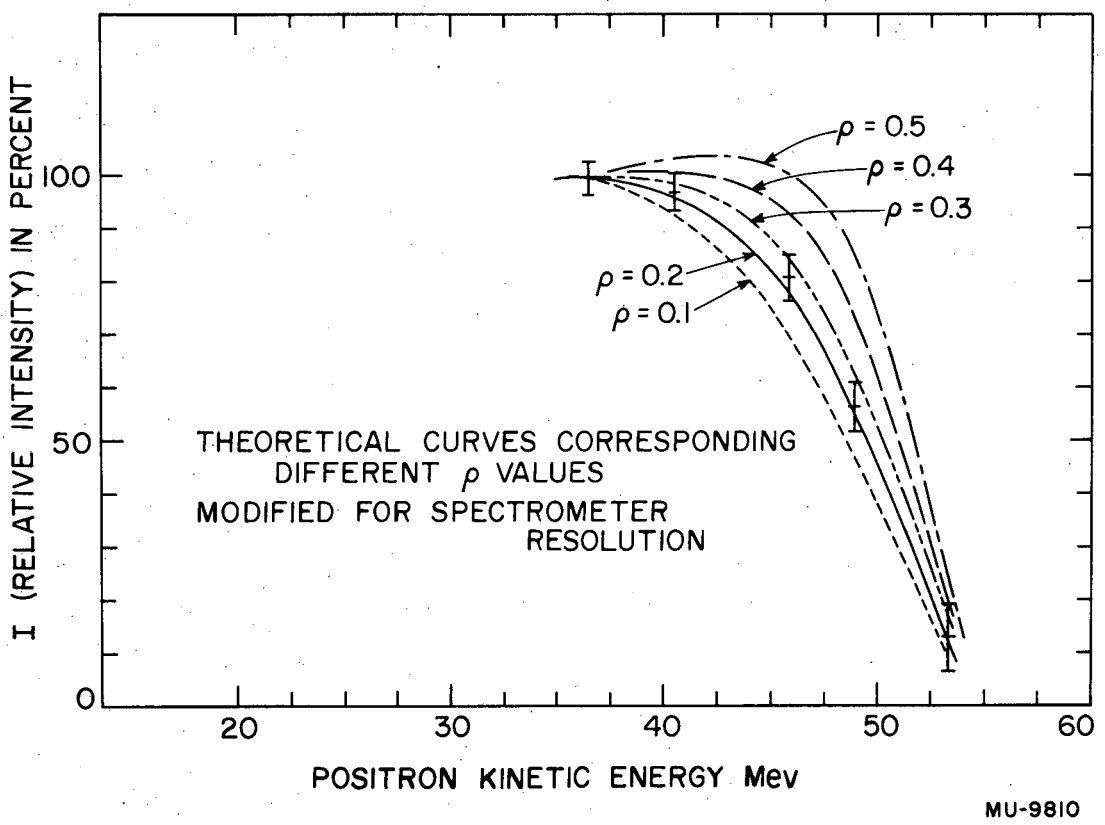

Fig. 9. Preliminary results obtained with a 180° focusing spectrometer (i. e. our approximation of the Stanford spectrometer) compared with theoretical curves that were modified by folding in the resolution of the spectrometer. The small ionization correction was accounted for by shifting the abscissa scale.

μ-MESON POSITRON SPECTRUM MEASURED WITH THE SPIRAL-ORBIT SPECTROMETER

Ryokichi Sagane, Walter F. Dudziak, and James Vedder

Prior to our study of the resolution problem with alpha particles we made measurements of the μ-meson positron spectrum using the spiral-orbit spectrometer. These measurements consisted of a series of trials using solid cylindrical lithium targets of different diameters. In addition, a series of different proton-beam collimators were used so as to intentionally change the distribution of stopped μ-mesons within the target. We have withheld comment on these measurements because of our prospect of obtaining an accurate knowledge of the resolution for this particular geometry of the spectrometer through our α-ray measurements. Since the α-tests have been completed we can now make much more reliable reduction of these lithium data. Table V summarizes in tabular form the dimensions of the lithium targets and the sizes of the bombarding proton beams.

Table V

Lithium target dimensions (in.)	Proton beam diameters (in.)
2-3/8 O.D. x 3.5	3/4
1 O.D. x 5.5	3/4
1 O.D. x 5.5	1/2
1 O.D. x 5.5	3/8
5/8 O.D. x 5.5	3/8

The most accurate data were obtained by using the 1-in.-diameter cylindrical target. Furthermore, the data obtained by using collimated proton beams of three different sizes were in good agreement for most of the measured points.

Using the information gathered during the α-ray tests, we are now able to fold in the resolution curves of the spectrometer and the absorption corrections of our positron source into the theoretical curves. We find a small difference between the resulting theoretical curves if we apply the absorption and resolution corrections separately, or if a joint resolution-absorption correction is made (i.e., one does not make the assumption that resolution and absorption are separable). We obtain this joint resolution-absorption correction by folding the ionization-loss distribution into the resolution curve for each segment of the target. We then sum over the target for a combined absorption-resolution curve. The small difference between the two ways of applying these corrections will not affect our ρ value.

Because the atomic number of lithium is only 3 and the density 0.534 g/cm^3, the correction for ionization loss and straggling is quite small and radiation loss is negligible. The required corrections for ionization loss and straggling only amount to 2.3, 1.0, and 0.6 Mev respectively for lithium targets of diameters 2-3/8 in., 1 in., and 5/8 in. Furthermore, in this

experiment the correction due to resolution becomes significant only for positron energies larger than 47 Mev. The positron spectrum for positron energies lower than 47 Mev requires nearly no correction for resolution. This is illustrated in Fig. 10, where we present the measured points from the 1-in.-diameter lithium experiments which we shifted by 1.0 Mev to take account of the average 1.0-Mev ionization loss and straggling correction. Also appearing in Fig. 10 are three Michel curves representing $\rho = 0.4$, $\rho = 0.3$, and $\rho = 0.2$. These theoretical curves contain no corrections. Although a very careful recalculation of the lithium data is now in progress our preliminary analysis yields the results shown in Table VI.

Table VI

Preliminary estimates of ρ value from spiral-orbit experiments with Lithium Targets.

Lithium Target Diameter (in.)	Proton Beam Diameter (in.)	Michel ρ Value
2-3/8	3/4	$0.23^{+.04}_{-.06}$
1	3/4, 1/2, 3/8	$0.23^{+.03}_{-.05}$ *
5/8	3/8	$0.27^{+.05}_{-.07}$

* combined data

The larger ρ value reported for a 5/8-in. lithium target indicates that these data are being influenced by the so-called "fly-back effect." Our preliminary analysis reveals that the most likely ρ value from these lithium experiments will be about 0.23, which is in agreement with our previously published result.

During these measurements special attention was paid to stability of electronics, and to all checks, such as the lifetime of the μ-meson at each positron energy setting and the constancy of the phototube sensitivity with different magnetic field settings.

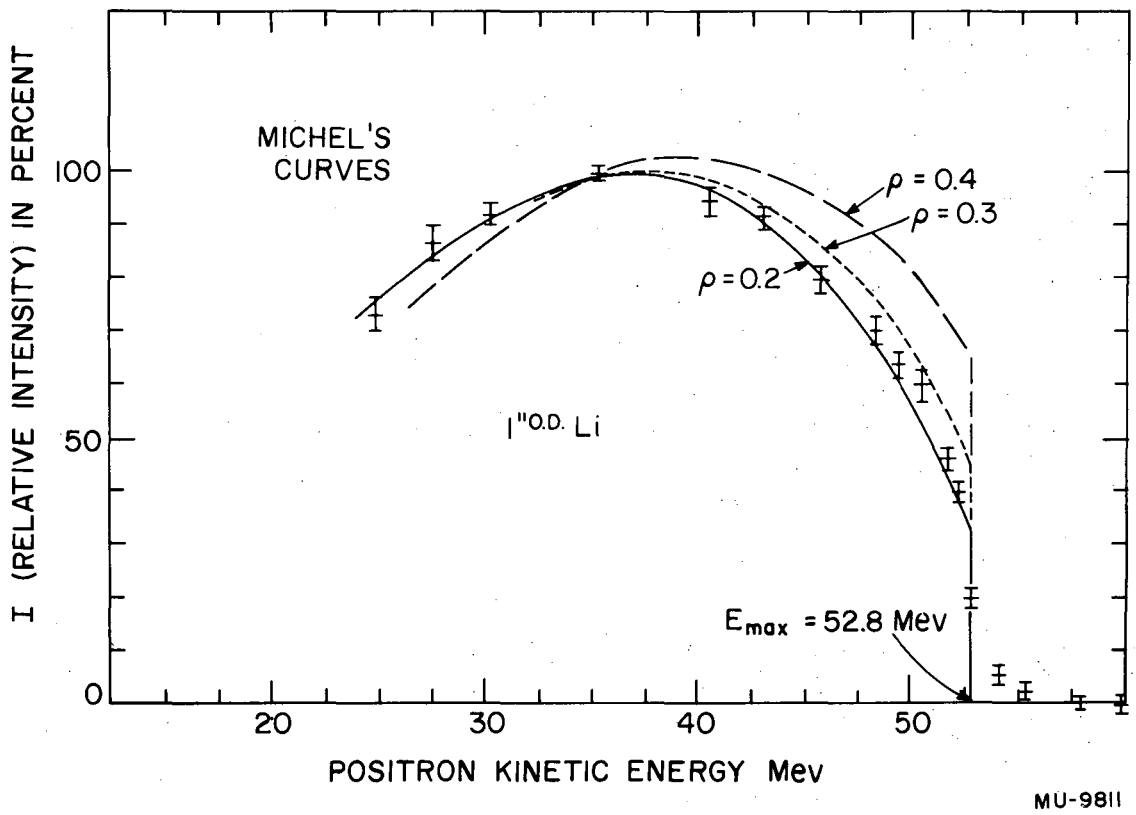

Fig. 10. Illustrates part of the data we obtained by using a lithium target and a spiral-orbit spectrometer. The unaltered theoretical curves of Michel are also shown. A 1-Mev shift of the abscissa scale was made to take account of the ionization and straggling correction in the target.

PROTON EXCITATION FUNCTION ON $\pi^{\pm}$ PRODUCTION FROM COMPLEX NUCLEI

Ryokichi Sagane and Walter F. Dudziak

During this period we have made a study of the effect of proton energy on the production of $\pi^{\pm}$ mesons from carbon, copper, and lead at 90° to the proton beam. This study was made by using C.2 nuclear emulsions and the 22-inch spiral-orbit spectrometer. The energy of the proton beam was adjusted by using lithium degraders. In all, the pion spectra from these elements was measured at five proton energies. The emulsions have been processed and await scanning.

DEVELOPMENTAL RESEARCH ON THE SPIRAL-ORBIT SPECTROMETER

Norris Nickols and Ryokichi Sagane

The analog computer for the trajectories of charged particles developed by Dr. Bayard Rankin was found very useful in a further development of the spiral-orbit spectrometer. Two improvements have been studied using the computer, and the results from these studies are about ready for experimental verification.

1. Study of trajectories of particles near the critical orbit that have a momentum lying within ± 2% of the critical-orbit momentum showed the possibility of focusing these particles into a smaller area at a radius smaller than the radius of the critical orbit. This is done by superimposing a sector-shaped magnetic field of approximately 60° in the region of the critical orbit. It was found by these trajectory studies that the density of particles could be increased by roughly a factor of 3 in the region of the detector.

2. An attempt to decrease the amplitude of the z-direction oscillation. It has been known that one can easily focus charged particles emitted even at ± 30° off from the median plane by using a rapidly decreasing magnetic field. This means that the spiral-orbit spectrometer can be used for focusing these widely divergent outgoing particles in case a very high resolution is not required. However, these particles emitted at small angles to the median plane oscillate with a quite large amplitude relative to the median plane near the critical orbit position. This means that the efficiency of detection of these particles is usually quite small. In order to reduce this amplitude of z-direction oscillation so as to increase the possibility of detecting these particles a defocusing magnetic field -- i.e., an increasing field versus radius -- should be superimposed at a suitable radius. A study of the z-directional motion of charged particles by using the analog computer with an assumed magnetic field distribution predicts a reduction of the amplitude of z-directional oscillation near the detector by a factor of 3. Production of a similar magnetic field distribution has been accomplished by using the 22-inch spiral-orbit spectrometer. We are at present preparing to test out these predictions experimentally.

PHYSICS RESEARCH

Emilio Segrè in charge

POLARIZATION OF DEUTERONS IN ELASTIC SCATTERING FROM COMPLEX NUCLEI

Robert D. Tripp, Tom Ypsilantis, John Baldwin, David L. Fischer, and Clyde Wiegand

The internal circulating deuteron beam was scattered from a carbon target and a 167 ± 5-Mev polarized deuteron beam was extracted in a manner analogous to that for the polarized proton beam. The differential cross section for the elastic scattering of a polarized deuteron beam can be shown to be of the form

$$I(\theta, \phi) = I_0(\theta) \left[1 + d + e \cos\phi + f \cos^2\phi\right],$$

where d, e, and f are functions of θ and the polarization state of the incident deuteron beam and I_0 is the unpolarized cross section. Measurements of e are shown in the accompanying graph. Over the corresponding range of angles the value of f was found to be consistent with 0 ± .05. The term d, which represents the enhancement of the azimuthally independent part of the cross section, was measured by comparing the differential cross section for the polarized beam with that of an unpolarized beam of the same energy. This term was also found to be small and consistent with d + 0 ± .05 over a similar angular interval.

PROTON-PROTON POLARIZATION AT 170 Mev

John Baldwin and David L. Fischer

The full-energy polarized proton beam was internally degraded to measure the p-p polarization at 170 Mev. It can be shown that in the angular region where Coulomb effects can be neglected, $\frac{P}{\sin\theta\cos\theta}$ may be represented as a polynomial in $\cos^2\theta$. We fit our data to $P/\sin\theta\cos\theta = \alpha + \beta\cos^2\theta$ by least squares. The results are

$$\alpha = 0.31 \pm .08,$$

$$\beta = 0.31 \pm .14.$$

A paper is being prepared for publication in the Physical Review.

PHASE-SHIFT ANALYSIS OF p-p SCATTERING

H. Stapp, Tom Ypsilantis, Owen Chamberlain, and Emilio Segrè

The phase-shift analysis of proton-proton scattering at 310 Mev, initiated on the Univac computer at University of California Radiation Laboratory, Livermore, was continued by Mr. Stapp on the Los Alamos Maniac computer. It was hoped that with the aid of the computing machine an unambiguous set of phase shifts involving s-, p-, d-, and f-waves could be obtained from the scattering experiments, which involved measurements of cross section, polarization, and also two parameters involved in triple scattering.

The machine showed that there were ten sets of phase shifts (each set consisting of eight phase shifts and one mixing parameter) that were consistent with the experimental results as given to the machine. These sets, when examined for the nature of Coulomb interference predicted, were found to contain only two sets that were consistent with the (negative) Coulomb interference found by Chamberlain, Pettengill, Segrè, and Wiegand[1] and by Fischer and Goldhaber[2] at about the same energy.

To differentiate between the final two sets of phase shifts, and to determine whether it is proper to neglect g- and h-waves, further experimental work seems required. It is hoped that the triple-scattering experiments may be extended or that a polarization-correlation experiment may be performed.

HIGH-ENERGY FISSION CROSS SECTIONS

Herbert M. Steiner

We have made further runs at the 184-inch synchrocyclotron using a cancellation-type ion chamber. In particular, a closer study was made of deuteron- and alpha-induced fission in U^{238}, U^{235}, Th^{232}, Bi, and Au. These measurements have now been completed and will be reported soon. The bismuth-loaded emulsions, which were exposed at the Cal Tech synchrotron, have been partially analyzed, and seem to indicate agreement with our counter data. Analysis of the bremsstrahlung spectra used in the earlier experiments is still under way. Samples of U^{233}, U^{234}, U^{236}, and Np^{237} are presently being prepared, and will be exposed in the beams of the 184-inch cyclotron and the synchrotron.

We have also attempted to measure the angular distribution of the fission fragments resulting from the high-energy proton-induced fission of U^{238}, U^{235}, Th, and Bi. Unfortunately, background problems have so far made this experiment unfeasible. Use of an argon-filled fast fission detector may make this experiment possible.

K-MESON MASS FROM A K-HYDROGEN SCATTERING EVENT*

Warren W. Chupp, Gerson Goldhaber, Sulamith Goldhaber, William R. Johnson, Joseph E. Lannutti, and Emilio Segrè

A K-Hydrogen scattering event observed in a stack of nuclear emulsions exposed to the focused K^+ beam[3] enabled us to get a mass measurement on this K particle. Two independent measurements give $Mk = 973 \pm 12$ and $Mk = 984 \pm 79\ m_e$, with a weighted average of $973 \pm 12\ m_e$. Measurements on the secondary of the K particle permit us to exclude a τ' meson.

---

[1] Chamberlain, Pettengill, Segrè, and Wiegand, Phys. Rev. 95, 1348 (1954).

[2] D. Fischer and G. Goldhaber, Phys. Rev. 95, 1350 (1954).

* Submitted as a Letter to the Editor of the Physical Review.

[3] Kerth, Stork, Birge, Haddock, and Whitehead, BAPS, 1955, Washington Meeting, Paper P1.

IDENTIFICATION OF A θ^+ MESON

Gerson Goldhaber, E. Helmy, and Joseph E. Lannutti

We have observed the interaction in flight of a secondary from the decay of a K particle. The K particle was obtained from the focused K^+ beam[4] with a proper time of flight of $\sim 10^{-8}$ sec. The secondary, after traveling 9.5 mm, produced a 3-prong star which emitted a π^+ meson of ~ 16 Mev, finally giving π-μ-e decay. Measurements on the secondary before interaction gives $P\beta = 210 \pm 24$ and $g/g_o = 1.09 \pm .09$.

The total visible energy released in the star is > 70 Mev. Both these observations rule out a τ' meson ($\tau' \rightarrow \pi^+ + 2\pi^0$) and indicate we have a case of $K^+_{\pi 2} \equiv \theta^+$.

STUDY OF K^- STARS

Francis H. Webb, Gerson Goldhaber, Sulamith Goldhaber, and Warren W. Chupp

We are in the process of studying the stars produced by K^- mesons when coming to rest. A stack of Ilford G.5 emulsions has been exposed in the focused K^- beam.[4] The scanning to date has yielded 15 K^- stars with a prong distribution as shown in Table I.

Table I

Prong Distribution of K^- Stars

No. Shower Particles	Number of Black Prongs							Total No. of Stars
	0	1	2	3	4	5	6	
0	1	2	1	1	0	1	1	7
1	1	3	1	2	0	1	0	8
0 and 1	2	5	2	3	0	2	1	15

No hyperons have been found among the prongs of these stars. The identification of the shower particles, some of which are certainly π mesons, is in progress.

[4] Kerth, Stork, Birge, Haddock, and Whitehead, Bull. Am. Phys. Soc. 30, No. 3, 41 (1955)

INTERACTIONS OF 5.7-Bev PROTONS IN NUCLEAR EMULSION

Edwin L. Iloff

A stack of Ilford G.5 (600 μ) nuclear emulsions was exposed to 5.7-Bev protons in the Bevatron so that the incident proton tracks are parallel to the surface of the emulsion layers. These were scanned under high magnification "along the track" and all interactions were recorded that included scattering of 1° or greater. Thus far 100 interactions have been found. This gives a mean free path for 5.7-Bev protons in emulsion of 37 ± 4 cm. Eight of the events found are scatters, all of projected angle less than 8°. A scatter is defined as an event with a minimum-ionizing particle incident and one minimum-ionizing particle going out. These may be elastic scattering, or events in which neutral particles are emitted as well as the charged particle observed. Coulomb scattering and diffraction scattering from the nucleus as a whole are both expected to be less than 1°.

About 10% of the stars have from 2 to 4 shower particles (tracks of $\leqslant 1.4$ times minimum ionization) with no dark tracks emerging. The remaining stars have various numbers of prongs up to 30. This work is being continued.

ACCELERATOR OPERATION AND DEVELOPMENT

BEVATRON

Edward J. Lofgren in charge

Further progress in the Bevatron program is the subject of separate reports by Edward J. Lofgren and Harry G. Heard, "Bevatron Operation and Development. IV," UCRL-2954, and "Bevatron Operation and Development. V," UCRL-3033.

184-INCH CYCLOTRON

Robert L. Thornton in charge

MODIFICATION

Richard Burleigh

Magnet

The new pole-tip-lifting device has been completed and has been used to move the pole tips from the Bevatron Building to the 184-Inch Cyclotron Building.

Tests have been made on clamped and soft-soldered joints in place of the originally proposed hard-soldered joints for connecting the auxiliary coil leads to the terminal boxes. The hard-soldered joints appeared to be difficult to make in the available space.

Radiofrequency System

Further investigations and half-scale and full-scale rf tests indicate the feasibility of operating the machine with two pairs of vibrating blades instead of four as originally proposed. To distribute the current appropriately on the dee and to facilitate the installation of the transmission lines, the two pairs of blades are separated by a 30-inch gap at the center instead of the 4-inch gap used with four pairs of blades. The two pairs of blades are now mounted on the faceplate in the appropriate positions preparatory to phasing tests. The parts for the new stators are almost complete. These stators are mounted on the blade mounts and are connected to the dee by flexible members. New range-changing capacitors will be installed outboard of the blades.

The corrosion problem in the blades has been solved by eliminating the coolant in the blades altogether and cooling through the clamp bars. As all the blades showed evidence of corrosion and as no satisfactory method for reboring the holes was found, four new blades without cooling holes were ordered and are now being machined at Mare Island. The existing blades will be used as spares.

Under test it was found that a mechanical cross mode could be excited in the blades under certain conditions. It has been found that this can

be eliminated by cutting longitudinal slots in the blades from a point just inside the tip to a point about 8 inches from the tip.

Miscellaneous

The concrete blocks for the meson cave have been delivered. The steel boxes for the cave are now being finish welded. The shielding for the slot, including an adjustable-position port, is being designed.

The shutdown date is now September 1955.

Thornton

60-INCH CYCLOTRON

Joseph G. Hamilton in charge

MODIFICATION

G. Bernard Rossi

Most of the effort of this quarter has been devoted to preparation for a scheduled shutdown on June 1, 1955. The shutdown is being planned to overhaul our 250-kw generator, increase the cooling-tower efficiency, rectify some deficiencies of the magnet oil-circulation system, and install a frequency shifter that can be operated external to the vacuum system. Previous reports (UCRL-2805, p 37; UCRL-2920, p 32) noted work done with heavy ions with a frequency-shifting spider internal to the vacuum system. Sufficient information was obtained to warrant the external device presently under construction.

A quarter-scale model of the 60-inch rf system was built to check ranges of shifting available with the new device, which requires stub transmission lines introduced in parallel to our existing dee stem lines. With the internal spider set for a base frequency of 10.8 megacycles with the added stub open, capacity changes allow a variation to 10.6 megacycles. With these stubs shorted, a frequency shift from 12.46 to 11.9 megacycles can be realized by motion of the short. The high-frequency range will allow for alpha-energy variations from 44 Mev to 52 Mev, while the lower range shift will vary the heavy-ion energies.

With these frequency ranges, full advantage can be taken of the magnetic field range. Figure 1 indicates the range of 15,800 kg to 19,700 kg to be available. The shutdown is planned for completion on June 13, 1955.

OPERATION

Summary of operations as prepared by W. B. Jones for this quarter:

Alpha bombardments	683.8 hr
Deuteron bombardments	104.6 hr
Proton bombardments	113.4 hr
Carbon bombardments	18.0 hr
Experimental bombardments	45.9 hr
Operations total	965.7 hr
Outage time	135.4 hr
Available time	1101.1 hr
Generator repair	91.3 hr
Shutdown	926.6 hr
Holidays	16.0 hr
Daylight Saving Time change	1.0 hr
Total time	2135.0 hr

Operating efficiency: 87.7 percent.

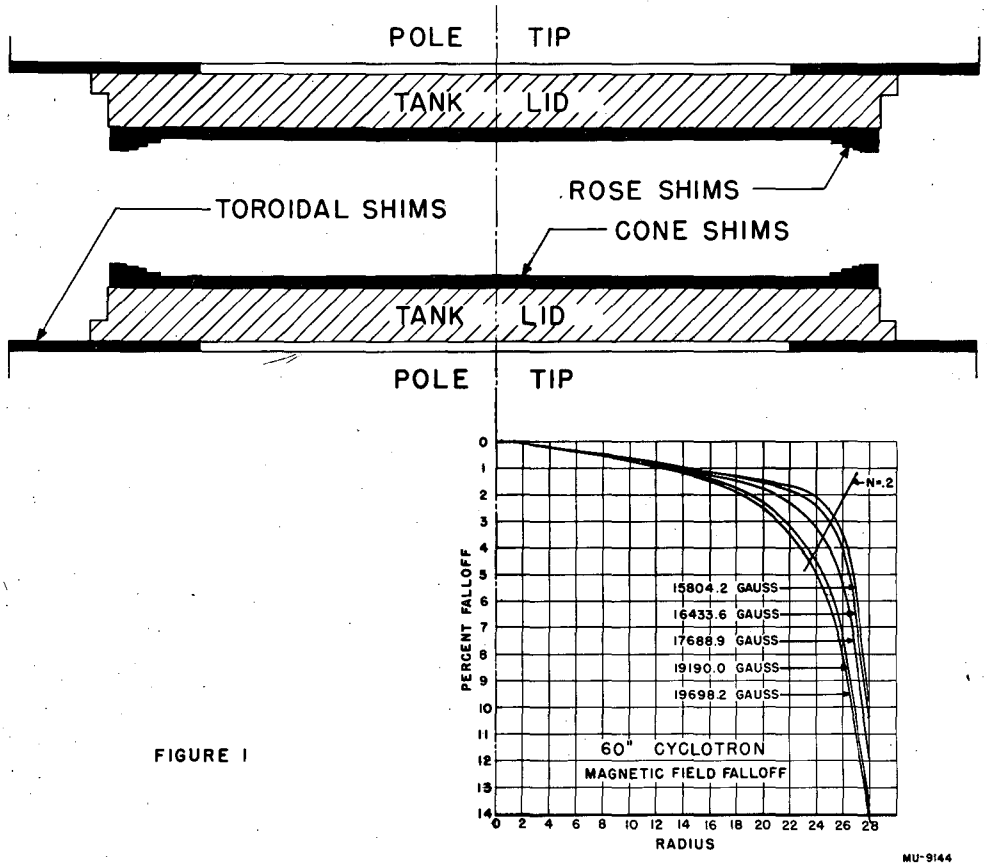

FIGURE I

Fig. 1. Magnetic field of 60-inch cyclotron.

LINEAR ACCELERATOR

Luis W. Alvarez in charge

OPERATION

James Donald Gow

The linear accelerator and Van de Graaff operated a total of 561 hours for research this quarter. No major modifications were made. Considerable outage was caused by drooping of the Van de Graaff voltage and the time necessary to find the cause and correct it. A clean-up program, including removal and cleaning of the accelerating tube, failed to correct the trouble. It was found that the trouble was associated with currents from the main tank walls. The interior paint was sandblasted off, which eliminated the trouble. A thin layer of clear glyptal was used to paint the sandblasted surface. This caused the same trouble, and operation now is with the inner wall bare.

The manufacturer of the 3W10000 oscillator tubes has made certain improvements in the tube. These were done to give extended tube life. Unfortunately, they resulted in a large change in interelectrode capacitance. Because this change exceeded the tuning range of our oscillators, some modification in the oscillators is required. The necessary changes are under development.

SYNCHROTRON

Edwin M. McMillan in charge

RESEARCH PROGRAM

Robert W. Kenney

During the period from February 1 to April 12 the synchrotron was undergoing a major overhaul. On April 13, experiments were begun on a normal running schedule.

Investigation of the total cross section for π^0 production as a function of atomic number was begun by John Anderson, Charles McDonald, and Robert W. Kenney. The counting gear was checked out and the experimental approach to the problem was seen to be nearly satisfactory. The necessary modifications to the gear are now being made.

A large Cerenkov counter, employing lead glass for efficient counting of high-energy photons, was checked out by Robert Cence, Malvern Jester, and John Brabant, using monoenergetic electrons analyzed by the pair spectometer magnet. It was found that the output pulse height is linear with electron energy from 42 Mev to 319 Mev. The pulse-height resolution is 30% for electron energies above 200 Mev and somewhat greater at lower energies.

Larry Higgins is currently investigating the energy dependence of the cross section for scattering of high-energy photons from hydrogen. The work has just begun and no results are yet available.

TESTS AND MODIFICATIONS

Rudin M. Johnson

During February and March the synchrotron was not used for physics experiments because of difficulties in obtaining usable beam after the January tear-down and overhaul. The difficulties were mainly due to a poor field condition inside the doughnut caused by a nonuniform conducting coating. A much improved method of spray-painting the doughnut and testing this coating for uniformity has been developed. The synchrotron has been operating satisfactorily during April at full energy with maximum beam intensities of approximately one-tenth of our previous maximum.

Line-voltage variations caused by the Bevatron (especially when it runs at 15 pulses/min) have caused the synchrotron beam to be unstable. A voltage regulator installed on the injector high voltage has improved this situation considerably. A capacitor hv regulator has been model-tested by the Electrical Engineering department and indicated that capacitor hv regulation to 0.1% or better is possible. The installation of a full-scale model in the synchrotron sometime this summer should make line-voltage variation effects negligible.

Two pyrex glass doughnut sections to be used with the linear accelerator injector shattered when evacuated. A ceramic doughnut section is being fabricated by W. Shakespeare in Boston and will be ready for tests in June. Development of a plastic and glass-fiber doughnut section is being carried out by our group.

Work has started on the synchrotron linac Model II to be used as a spare for the present one and to provide a high-duty-cycle beam for chemistry and physics research.

A new rf resonator has been plated, with good success.

Inflector tests are being made in the 120° magnet test section with a new 10-μsec inflector pulse transformer. Tests will soon start with the 2-Mev linac connected to the 120° magnet.

Information Division
6-22-55 sa

McMillan