UCRL 319 Rev.

Cy 2

UNIVERSITY OF CALIFORNIA

Radiation Laboratory

BERKELEY, CALIFORNIA

DISCLAIMER

This document was prepared as an account of work sponsored by the United States Government. While this document is believed to contain correct information, neither the United States Government nor any agency thereof, nor the Regents of the University of California, nor any of their employees, makes any warranty, express or implied, or assumes any legal responsibility for the accuracy, completeness, or usefulness of any information, apparatus, product, or process disclosed, or represents that its use would not infringe privately owned rights. Reference herein to any specific commercial product, process, or service by its trade name, trademark, manufacturer, or otherwise, does not necessarily constitute or imply its endorsement, recommendation, or favoring by the United States Government or any agency thereof, or the Regents of the University of California. The views and opinions of authors expressed herein do not necessarily state or reflect those of the United States Government or any agency thereof or the Regents of the University of California.

COPY 2

UNCLASSIFIED

UCRL 319
Revised

Unclassified Distribution

UNIVERSITY OF CALIFORNIA

Radiation Laboratory

Contract No. W-7405-eng-48

BRANCHING RATIO IN BE^7 DECAY

C. M. Turner

July 20, 1949

Berkeley, California

BRANCHING RATIO IN BE^7 DECAY

C. M. Turner

INTRODUCTION

The work of Rumbaugh, Roberts and Hafstad[1] showed that Be^7 decays to Li^7 by orbital electron capture, with approximately 90% of the transitions going directly to the ground state of Li^7 and with about 10% going first to the excited state of Li^7 and thence to the ground state by emission of a 480 Kev gamma ray.[2-8] The energy level and decay scheme for Be^7 is summarized in Figure 1. If we define the branching ratio R as the fraction of decays which go by way of the excited state of Li^7, then the work of Rumbaugh, Roberts and Hafstad showed only that $.03 < R < .3$, although it has since been generally assumed that R is approximately 0.1. The desirability of knowing R to better accuracy, in order to provide a check on various aspects of β decay theory, has been pointed out by several writers,[9,10,11] and a more accurate measurement was undertaken by the author, upon the suggestion of Professor Emilio Segrè.

THE GENERAL EXPERIMENTAL METHOD

The basic requirements for making the branching ratio measurement are: (a) a means for producing Be^7 samples containing a known number of Be^7 atoms, and (b) a means for calibrating the detecting device used to measure the Be^7 γ activity.

A convenient means for producing known Be^7 samples is to use the $Li^7(p,n)Be^7$ reaction, making a quantitative measurement of the liberated neutrons. Furthermore, annihilation quanta provide a convenient means for calibrating the counter, since their energy of approximately 510 Kev[12-13] is close to that of the Be^7 decay quanta (480 Kev). It turns out, as shown in the following paragraph, that by using a (p,n) reaction to produce the positron emitter whose positrons are converted to annihilation quanta for calibration, the necessity for making an absolute measure-

ment of the number of neutrons is avoided as also is the necessity for an absolute calibration of the counter.

The proton beam from the Van de Graaff electrostatic generator is used to produce a Be^7 sample by bombarding a thick lithium target. The neutrons liberated in the reaction are absorbed in a small manganese bath which surrounds the target, a fraction of the neutrons being captured by the manganese to give Mn^{56} which decays by beta and gamma emission with a half life of 2.59 hours.[14] The activity induced in this bath, as measured after the bombardment and extrapolated to zero time, is directly proportional to the number of Be^7 atoms produced in the target. If N_{Be7} is the number of Be^7 atoms formed in the target and A_{Be7} the neutron induced activity in the bath as measured in a standard geometry, then,

$$N_{Be7} = k\, A_{Be7} \qquad (1)$$

If now a C^{11} sample is produced in the same setup using the $B^{11}(p,n)C^{11}$ reaction and the bath activity is again measured, we have the relation,

$$N_{C11} = k\, A_{C11} \qquad (2)$$

where N_{C11} and A_{C11} are respectively the number of C^{11} atoms formed and A_{C11} the neutron induced activity in the Mn bath.

Taking the ratio of (1) to (2), we get,

$$\frac{N_{Be7}}{N_{C11}} = \frac{A_{Be7}}{A_{C11}} \qquad (3)$$

The Be^7 and C^{11} samples produced as outlined above are counted in a standard geometry with respect to a Geiger counter (Figure 5) with enough intervening absorber to insure the conversion to annihilation quanta of all positrons emitted by C^{11} decays. Then the counting rates for the two targets will be,

$$C_{Be7} = N_{Be7} \cdot \lambda_{Be7} \cdot E_1 \cdot R \qquad (4)$$

and

$$C_{C11} = N_{C11} \cdot \lambda_{C11} \cdot E_2 \cdot 2 \qquad (5)$$

where E_1 is the efficiency of the counter for detection of Be^7 decay quanta, E_2 its efficiency for annihilation quanta, and R is the branching ratio. The factor 2 enters in (5) since two quanta appear upon the annihilation of each positron. Taking the ratio of (4) to (5),

$$\frac{C_{Be7}}{C_{C11}} = \frac{N_{Be7}}{N_{C11}} \frac{\lambda_{Be7}}{\lambda_{C11}} \frac{R}{2} \frac{E_1}{E_2} \qquad (6)$$

Solving for R and using relation (3),

$$R = \frac{C_{Be7}}{A_{Be7}} \times \frac{A_{C11}}{C_{C11}} \times \frac{\lambda_{C11}}{\lambda_{Be7}} \times \frac{E_2}{E_1} \times 2 \qquad (7)$$

Hence R is given in terms of the measureable ratios $\frac{C_{Be7}}{A_{Be7}}$ and $\frac{A_{C11}}{C_{C11}}$, the counter efficiency ratio E_2/E_1, and the known disintegration constants of C^{11} and Be^7. The ratio E_2/E_1 can be estimated from the absorption coefficients for annihilation radiation and the Li^{7*} radiation, and the energies of these radiations.

TARGET ACTIVATION

Figure 2 shows the geometry used for target activation. A lucite cylinder 15 inches long by 9 inches diameter filled with a concentrated water solution of $MnSO_4$ (500 gms. $MnSO_4 \cdot 4H_2O$/liter) surrounds the target which projects into a re-entrant tube along the axis of the cylinder. In order to provide a slowing down distance in the solution approximately proportional to the neutron energy at a given angle, the target is located somewhat ahead of the center of the container. A small container for the manganese solution was chosen, even though it means a greater neutron leakage loss, for two reasons: first, for the sake of convenience in handling; and second, to get a greater activity per unit volume of solution for a given number of neutrons traversing the bath. The latter reason becomes

important in the case of the $B^{11}(p,n)C^{11}$ reaction due to its relatively low yield.

The target is mounted on the end of the target tube assembly by means of a gasket and compression ring seal so it is quickly and easily removable for counting. The area of the target bombarded by the beam is defined by a 1/2 inch diameter aperture, A, and an electron suppressing electrode is provided to permit accurate measurement of the proton current impinging on the target.

Both metallic lithium and lithium fluoride were used for the lithium targets, while fused boron oxide (B_2O_3) and boron carbide (B_4C) were used for the boron targets. Metallic lithium and B_4C targets were used for the final runs.

Figure 3 shows a photograph of the experimental setup used for target activation.

COUNTING GEOMETRY

Manganese - Figure 4 shows the method used for measuring the activity of the manganese solution. A specially mounted Geiger counter is arranged to slide into the re-entrant tube in the bath container with accurately reproducible geometry. Gamma activity of the manganese (1 - 2 Mev)[15] is sufficient to give adequate counting rates. The whole assembly is enclosed inside a lead shield while counting, to reduce backgrounds. This method of counting has the advantages: (a) that the solution container is sealed so neither the volume nor concentration of the solution can change, (b) the importance of thorough stirring of the solution after irradiation is reduced somewhat since gamma quanta originating over a large volume can reach the counter.

Targets - Figure 5 shows the counting geometry used for counting the Be^7 and C^{11} activities. The targets are made geometrically identical and are clamped in the holder, H, which fits into the standard Radiation Laboratory counter setups, provided with a Victoreen counter with a 2.4 mg/cm^2 mica window. One-eighth inch of brass between targets and counter insures the conversion of all positrons from

C^{11} decays to annihilation quanta.

DISCUSSION OF POSSIBLE SOURCES OF ERROR AND CORRECTIONS

Neutron Sources and Sinks - Since the activity induced in the manganese bath is taken as being directly proportional to the activity produced in the target, neutrons produced by any source other than the (p,n) reaction in question will introduce an error, and likewise neutrons lost by any process other than capture in the bath solution will introduce an error, unless such extraneous sources or sinks are identical in both lithium and boron runs.

Extraneous Neutron Generation - Extraneous neutrons can in principle be produced by (γ,n) and (n,2n) reactions. However, the cross sections for these reactions are too small to be of any consequence. (p,n) reactions on elements in the targets other than lithium and boron can introduce an error. A correction for neutrons produced by the $C^{13}(p,n)N^{13}$ reaction on the carbon present in B_4C is estimated later, but turns out to be negligibly small.

Neutron Losses - Neutrons can be lost in two important ways other than capture in the manganese solution, -- namely by leakage out of the bath, and by capture in the target material itself. By adjusting the proton bombarding energies in the runs with lithium and boron targets so that the maximum neutron energies are approximately equal (about 500 Kev), the leakage losses are made nearly the same in the two cases, so that in the ratio they will cancel out. Since both lithium and boron have relatively high capture cross sections for slow neutrons, they will act as sinks which cannot be neglected. If the total capture cross section were the same for the two targets, then it would introduce no error in the ratio. This can be made the case by the simple expedient of using both targets in each run. When the lithium target is being bombarded by protons, the boron target is placed directly ahead of it where it will be traversed by the neutron flux (Figure 6) and vice versa. In this way the geometry for neutron capture remains the same in the two cases.

Spurious Target Activity - Activities other than the Be^7 and C^{11} desired may be formed in the targets by proton bombardment of impurities or by neutron capture. These can be checked for by observing the half life for decay. It was found that metallic lithium targets contain sufficient sodium impurity to give an activity of Na^{24}, formed by neutron capture, about equal to the Be^7 activity. By waiting a few days to count the Be^7, the Na^{24} can be allowed to decay out since its half life is 14.8 hours[16] as compared to 52.9 days for Be^7.[17] No other extraneous activities were observed.

Loss of Target Material - Loss of target material during bombardment or during handling can cause an error. During early runs, fused boron oxide (B_2O_3) was used for the boron target and it was found difficult to avoid overheating and loss of target material by evaporation. Sintered B_4C targets are now used so overheating is no problem, and a greater neutron yield is obtained per proton due to the greater amount of boron present.

Manganese Counting - Care must be taken to stir the manganese solution reasonably thoroughly before counting, so the activity will be uniformly distributed throughout the solution. The solution is kept saturated with SO_2 to prevent precipitation as MnO_2 of manganese atoms freed in the rupture of molecular bonds by the Szilard-Chalmers process, -- a precaution pointed out by Professor Segrè.

Target Counting - Any differences in the counting geometries for the two targets will introduce errors. The Be^7 activity is distributed through a layer at the surface of the lithium target whose thickness is equal to the range of the protons between the bombarding energy of about 2.4 Mev and the $Li^7(p,n)Be^7$ threshold energy of 1.88 Mev. This thickness is 4 mg/cm^2 or .003 inch. Similarly, the C^{11} atoms will be distributed through a layer whose thickness is also about 4 mg/cm^2, but due to the greater density of B_4C, the layer thickness is only about .001 inch. It is apparent that these source thicknesses are so small that in themselves they

are negligible. However, the positrons emitted by C^{11} decays do not on the average annihilate until they reach the end of their range.[12] The maximum positron energy from C^{11} decay is about 1 Mev[18] which corresponds to an average range in brass of about .020 inch and in B_4C of about .080 inch. This means that the annihilation quanta can originate throughout a layer about .1 inch thick. This can in principle introduce both a $1/r^2$ correction, and a correction due to the differing amounts of absorbing material intervening between counter and point of origin of annihilation quanta. The latter effect, however, cancels approximately because for each quantum which encounters less absorbing material, there is a corresponding one which encounters a proportionately greater amount of absorbing material. The greater penetration of the positrons into the B_4C than into the brass means that the effective position of the source of annihilation quanta is displaced away from the counter. Assuming equal numbers of positrons annihilated in brass and B_4C this shift is estimated to be only about .015 inch. This gives a $1/r^2$ correction of only about 1%.

Counter Calibration - Inasmuch as the energy of the annihilation quanta (510 Kev) used for counter calibration is greater than that of the Be^7 decay quanta (480 Kev) the efficiency of the counter will be slightly different in the two cases and hence a correction must be applied as already mentioned. The absorption of radiation in this energy region is due about equally to the photoelectric and Compton effects. The number of photo and Compton electrons liberated per unit mass of material should be directly proportional to the absorption coefficient of the radiation. However, the volume of material in the counter walls and surroundings from which these electrons can enter the sensitive volume of the counter and be counted will increase approximately linearly with increasing quantum energy since electrons liberated at proportionately greater depths can emerge. This effect partially compensates the variation of absorption coefficient with energy. Using the lead absorption coefficients obtained by Hudson, Herb and Plain[19] of 1.681 cm^{-1} for Li^{7*}

quanta and 1.414 cm^{-1} for annihilation quanta, the efficiency of the counter for annihilation quanta is estimated to be $\frac{1.414}{1.681} \times \frac{510}{480} = .90$ that for Li^{7*} quanta. Hence substituting this value for E_2/E_1 in Eqn. (7),

$$R = \frac{C_{Be7}}{A_{Be^7}} \times \frac{A_{C11}}{C_{C^{11}}} \times \frac{\lambda_{C11}}{\lambda_{Be^7}} \times .9 \times 2 \qquad (8)$$

Disintegration Constants - Any error in the value used for the disintegration constant of manganese will introduce a magnified error into R for the following reason. The duration and proton bombarding current used in the lithium runs must be such as to give an adequate Be^7 counting rate. The long half life of Be^7 and the fact that only about one-tenth of the decays give γ rays means that a very high manganese activity will be produced in the process of getting enough Be^7 activity, as opposed to the case of the $B^{11}(p,n)C^{11}$ reaction where the situation is reversed due to the low yield of the reaction and the short half life of C^{11}. The manganese activity following a lithium bombardment must be allowed to decay for about 5 half lives before it is in the range where it can be counted with a Geiger counter, without an excessive coincidence correction. The "zero time" activity must then be determined by extrapolation which means that any error in the disintegration constant will cause a larger error in the extrapolated value. The error in initial activity when an extrapolation over 5 half lives is used is about 3 times the error in the disintegration constant. The half life of Mn^{56} as measured by Livingood and Seaborg[14] is 2.59 ± .02 hours which gives for the disintegration constant $4.46 \times 10^{-3} \pm 1\%$ min^{-1}. Hence a probable error of about ± 3% can be expected for A_{Be7}.

A similar situation exists for the case of C^{11} since its activity is also too great for immediate counting. Here a decay time of 3 or 4 half lives must elapse prior to counting. From the half life of 20.5 ± .6 min for C^{11} as measured by Solomon[20] the disintegration constant is found to be $3.38 \times 10^{-2} \pm 3\%$ min^{-1}.

This gives a probable error of about 5% in the value of C_{C11}.

The disintegration constants of C^{11} and Be^7 enter directly into the expression for R. From above, we found that $\lambda_{C11} = 3.38 \times 10^{-2} \pm 3\%$ min^{-1}. Segrè and Wiegand[17] found the half life of Be^7 to be 52.93 ± 0.22 days which gives a value of $1.31 \times 10^{-2} \pm .4\%$ day^{-1} for λ_{Be7}.

Geiger Counter Coincidence Corrections - Since the counting rate for C_{C11} and A_{Be7} are initially high, it is necessary to make a correction for counting losses. The correction factor as a function of counting rate was determined experimentally using the two source method, where the individual counting rates/min C_1 and C_2 for two sources S_1 and S_2 are measured, as also is the combined counting rate C_{12}. The counter dead time in minutes is then given by,

$$t = \frac{C_1 + C_2 - C_{12}}{2C_1C_2} \qquad (9)$$

and the true counts N_T as a function of observed counts N_{obs} is given by,

$$N_T = \frac{N_{obs}}{1 - N_{obs} \times t} \qquad (10)$$

Neutrons from $C^{13}(p,n)N^{13}$ - A correction for neutrons produced by the $C^{13}(p,n)N^{13}$ on the carbon in B_4C is found by making a separate run with a pure carbon target. Since only 1/5 of the stopping power of the B_4C target is due to the carbon, the background from this reaction will be only 1/5 the activity induced in the bath in a run with pure carbon target. This turns out to be only about .3% of the activity obtained with a B_4C target, and hence the correction to R is negligible.

Another factor to be considered is the N^{13} activity produced in the $C^{13}(p,n)N^{13}$ reaction. Since it emits positrons, it will give rise to annihilation quanta. However, its half life is only 10 minutes, compared to twenty minutes for C^{11}, and since the C^{11} cannot be counted for about 4 half lives, the N^{13} activity will have decayed by a factor of 2^8 or 256, while the C^{11} has decayed by only a factor of

2^4 or 16. Since the initial N^{13} activity (as obtained from the neutron induced activity in the bath) is only about .3% of the C^{11} activity, the correction for this effect is again entirely negligible.

Purity of C^{11} Decay - Any γ rays which may accompany the positrons from C^{11} decay will introduce an error into the calibration. The work of Siegbahn and Peterson[21], as well as that of Townsend[18] indicates that there are no γ rays from C^{11} decay.

Counting Statistics - Sufficient counts were taken on all runs to give 1% or better counting statistics.

DECAY OF TARGET ACTIVITY DURING BOMBARDMENT

The half life of C^{11} is about 20 minutes and that of Mn^{56} is about 2.59 hours. Since it is not possible to get sufficient activity in bombardment times short compared to these half lives, a correction must be made for decay during the target activation period. In order to do this, the proton current striking the target is integrated and recorded over intervals short compared to the half life of the activity in question. The end of the target activation period is taken as "zero" time for all activity measurements. The correction factor for decay during bombardment is given by:

$$N_t = N_{obs} \frac{Q}{\left[q_1 e^{-\lambda t_1} + q_2 e^{-\lambda t_2} + \ldots q_n e^{-\lambda t_n}\right]}$$

where N_{obs} is the observed activity as determined by subsequent counting and extrapolation back to the end of the bombardment period, N_t is the activity that would have been present if there had been no decay during activation, Q is the total proton charge collected during the activation period, $q_1 \ldots q_n$ are the proton charges collected during the n intervals into which the activation period is divided (short compared to the half life of the activity in question). $t_1 \ldots t_n$ are the

times from the mid-points of these intervals to the end of the bombardment, and λ is the disintegration constant.

Be^7 and C^{11} Yields - With a metallic lithium target, a 30 minute run with a proton beam of about 3 microamperes gives a Be^7 counting rate of about 130 individual counts/min, which is sufficient, since it can be counted for long periods. As already mentioned, the initial manganese counting rate (about 4000 scale of 64 counts/min) is very great and it has to be allowed to decay for about 5 half lives prior to counting. With B_4C targets, a 30 minute run with a 3 μa proton beam gives an initial manganese counting rate of about 60 scale of 64 counts/min, while the initial C^{11} counting rate is about 2000 scale of 64 counts/min. Here the C^{11} must be allowed to decay for about 3 half lives before counting.

RESULTS

Sixteen runs were made with lithium and boron targets and one run with a carbon target to establish the correction for the carbon present in the boron carbide targets. Most of these runs served only to perfect the techniques and eliminate errors therein. The results of the last three runs on each of lithium and boron targets appear to be reliable and are listed in Table I below.

C_{Be7}/A_{Be7}	A_{C11}/C_{C11}
0.557×10^{-3}	0.0319
0.552×10^{-3}	0.0314
0.578×10^{-3}	0.0322

TABLE I

The value of R given by these results after applying the correction for counter calibration is 0.118 ± 10%, where the probable error is taken as the square root of the sum of the squares of the estimated probable errors of the

individual measurements.

DISCUSSION

The value of about 0.12 found for the branching ratio appears to be definitely slightly higher than the value 0.10 previously taken from the work of Rumbaugh, Roberts and Hafstad. The agreement is however suprisingly good in view of the large uncertainty assigned by Rumbaugh, Roberts and Hafstad to their measurement. Conclusions previously drawn[10,11] on the basis of R = 0.1 are substantiated by this measurement.

The ground state of Li^7 is a $^2P_{3/2}$ level as shown by nuclear spin measurements. There is no reason to believe that the ground state of Be^7 is not also a $^2P_{3/2}$ level. The Li^7 excited state is most likely a $^2P_{1/2}$ level constituting a doublet with the $^2P_{3/2}$ ground state. Using these spin assignments (see Figure 1), transitions from Be^7 to the ground state of Li^7 have a spin change of 0 and hence are allowed by both Fermi ($\Delta I = 0$), and Gamow-Teller ($\Delta I = \pm 1, 0$) selection rules. However, transitions from Be^7 to the Li^7 excited level at 480 kilovolts have a spin change of -1 and transitions from the Li^7 excited level to the Li^7 ground level have a spin change of +1. Both these transitions are therefore forbidden by the Fermi selection rules, but are allowed by Gamow-Teller selection rules. A value of R as large as .12 speaks strongly in favor of the Gamow-Teller selection rules. The alternative that the two lithium levels have the same spin (3/2) is highly unlikely for theoretical reasons.[10]

Assuming the Gamow-Teller selection rules are applicable, β decay theory predicts a value of about 0.19 for R[10] which is in better agreement with the experimentally determined value of 0.12 than values computed on the basis of other assumptions.

The work described in this paper was performed under the auspices of the Atomic Energy Commission.

REFERENCES

1. Rumbaugh, Roberts, and Hafstad, Phys. Rev. 54, 657 (1938).
2. Buechner, Strait, Stergiopoulos and Sperduto, Phys. Rev. 74, 1569 (1948).
3. Elliot and Bell, Phys. Rev. 74, 1896 (1948).
4. Zaffarano, Kern, and Mitchell, Phys. Rev. 74, 105 (1948).
5. F. N. D. Kurie and M. Ter-Pogossion, Phys. Rev. 74, 677 (1948).
6. Rubin, Snyder, Lauritsen and Fowler, Bull. Am. Phys. Soc. 23, No. 5, 15 (1948).
7. Hornyak and Lauritsen, Bull. Am. Phys. Soc. 23, No. 5, 16 (1948).
8. M. Ter-Pogossian, Robinson and Goddard, Bull. Am. Phys. Soc. 24, No. 5, 6 (1949).
9. Haxby, Shoupp, Stevens, and Wells, Phys. Rev. 58, 1035 (1940).
10. Konopinski, R. M. P., 15, 209 (1943).
11. G. Breit and J. K. Knipp, Phys. Rev. 54, 652 (1938).
12. DuMond, Lind and Watson, Phys. Rev. 75, 1226 (1949).
13. Dumond and Cohen, R. M. P., 20, 82 (1948).
14. Livingood and Seaborg, Phys. Rev. 54, 391 (1938).
15. Siegbahn, Arkiv Mat., Astron. Fysik, 33A, No. 10, 19 (1946).
16. Van Voorhis, Phys. Rev. 49, 889 (1936).
17. Segrè and Wiegand, Phys. Rev. 75, 39 (1949).
18. Townsend, Proc. Roy. Soc., A177, 357 (1941).
19. Hudson, Herb, and Plain, Phys. Rev. 57, 587 (1940).
20. Solomon, Phys. Rev. 60, 279 (1941).
21. Siegbahn and Petersson, Arkiv Mat., Astron. Fysik, 32B, No. 5 (1946).

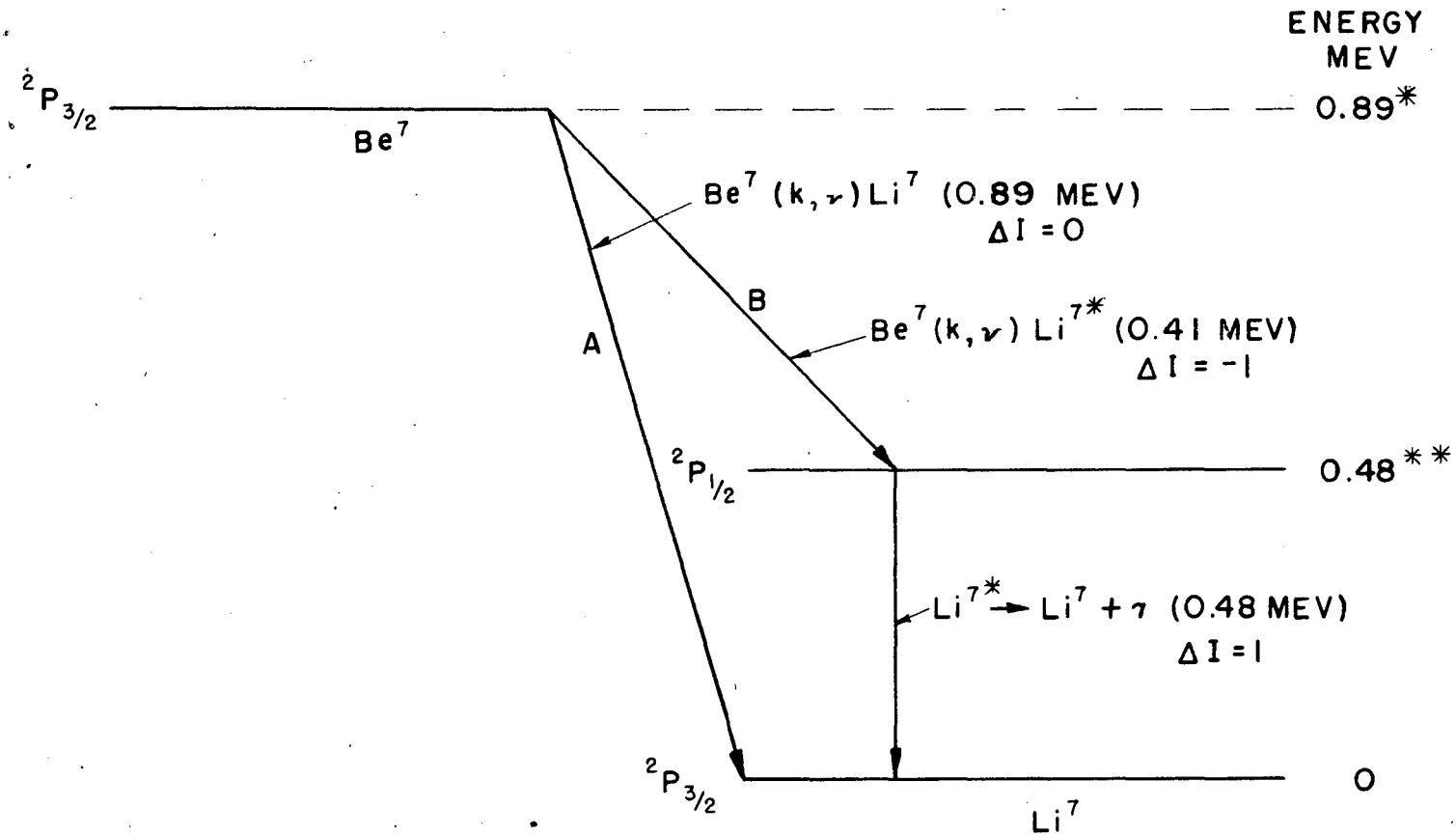

BRANCHING RATIO $R = \frac{\text{TRANSITIONS VIA B}}{\text{TRANSITIONS VIA A}} \cong .10$

* FROM $Li^7(p,n)Be^7$ THRESHOLD MEASUREMENT OF 1.882 MEV BY HERB, SNOWDON & SALA, PHYS. REV. 75, 246 (1949)

** HORNYAK & LAURITSEN, BULL. AM. PHYS. SOC. 23 NO. 5, 16 (1948)	479±2 KEV
RUBIN, SNYDER, LAURITSEN & FOWLER, BULL. AM. PHYS. SOC. 23, NO.5, 15 (1948)	480±2
BUECHNER, STRAIT, STERGIOPOULOS & SPERDUTO, PHYS. REV. 74, 1569 (1948)	482±3 483±6
F.N.D. KURIE AND M. TER POGOSSIAN, PHYS. REV. 74, 677 (1948)	485±5
ZAFFARANO, KERN, & MITCHELL, PHYS. REV. 74, 105 (1948)	474±4
ELLIOT & BELL, PHYS. REV. 74 1869 (1948)	478.5±1.5

FIG. 1

ENERGY LEVEL DIAGRAM FOR Be^7 DECAY

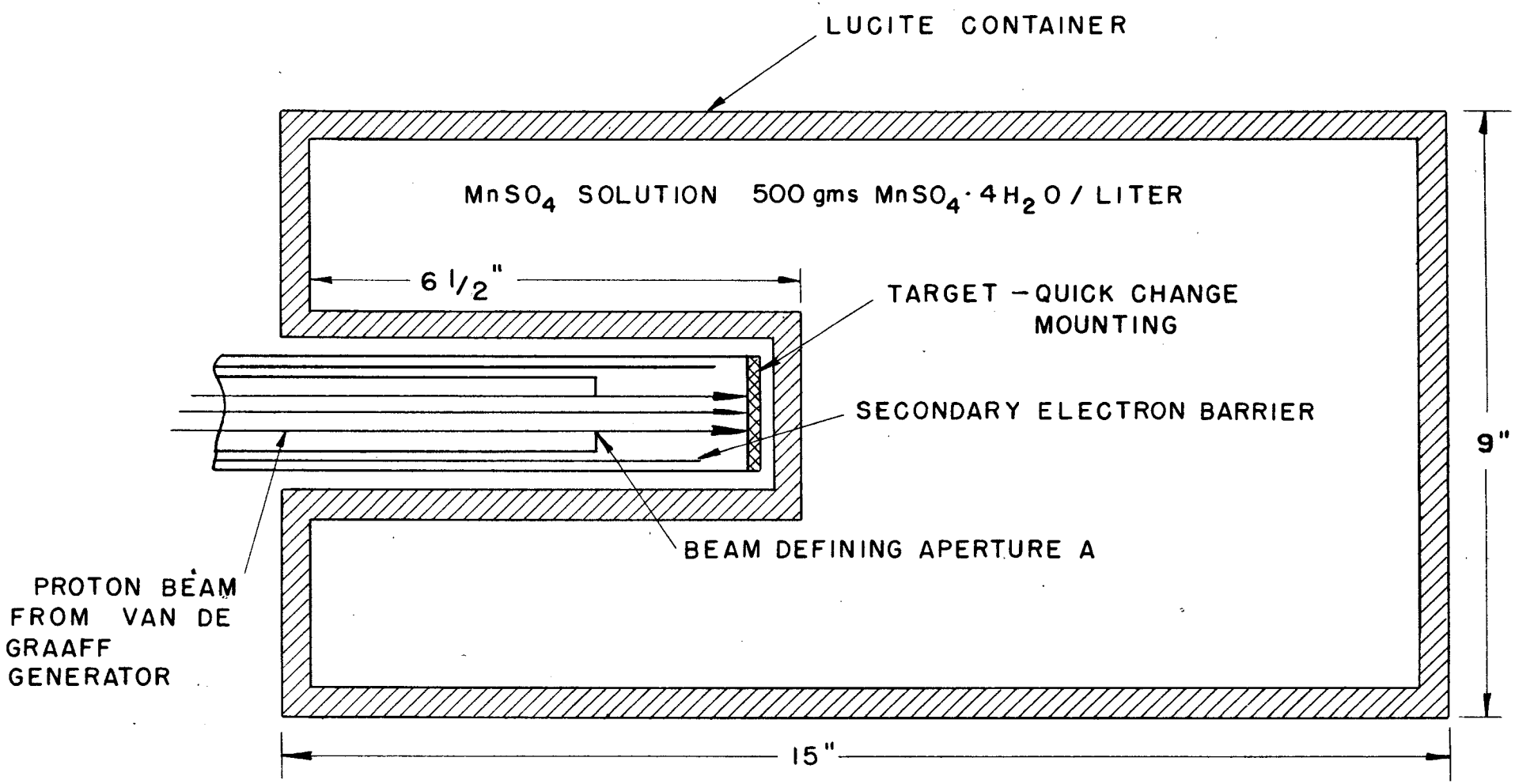

FIG. 2

TARGET TUBE AND MANGANESE BATH ASSEMBLY

13771-1

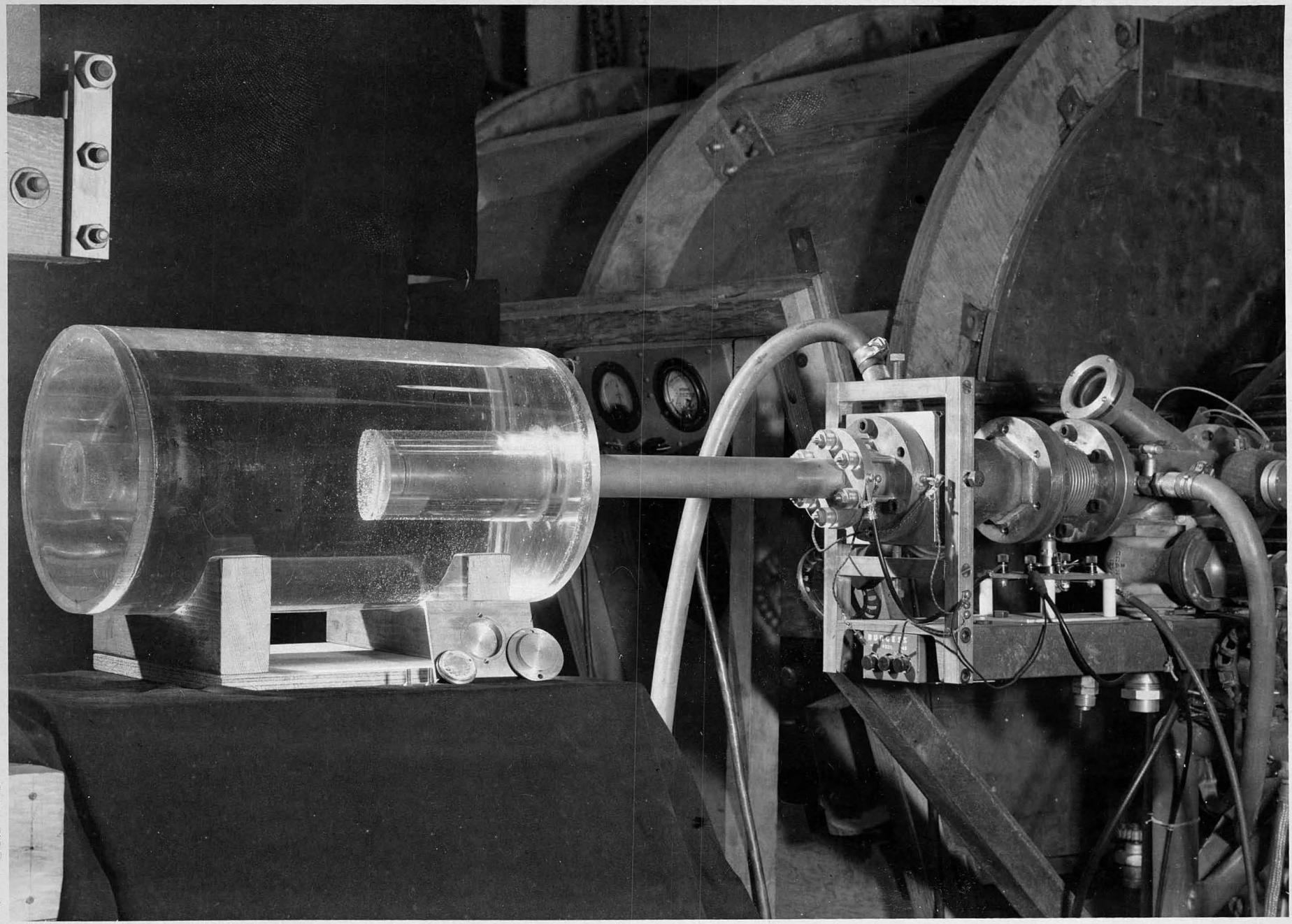

FIG. 3

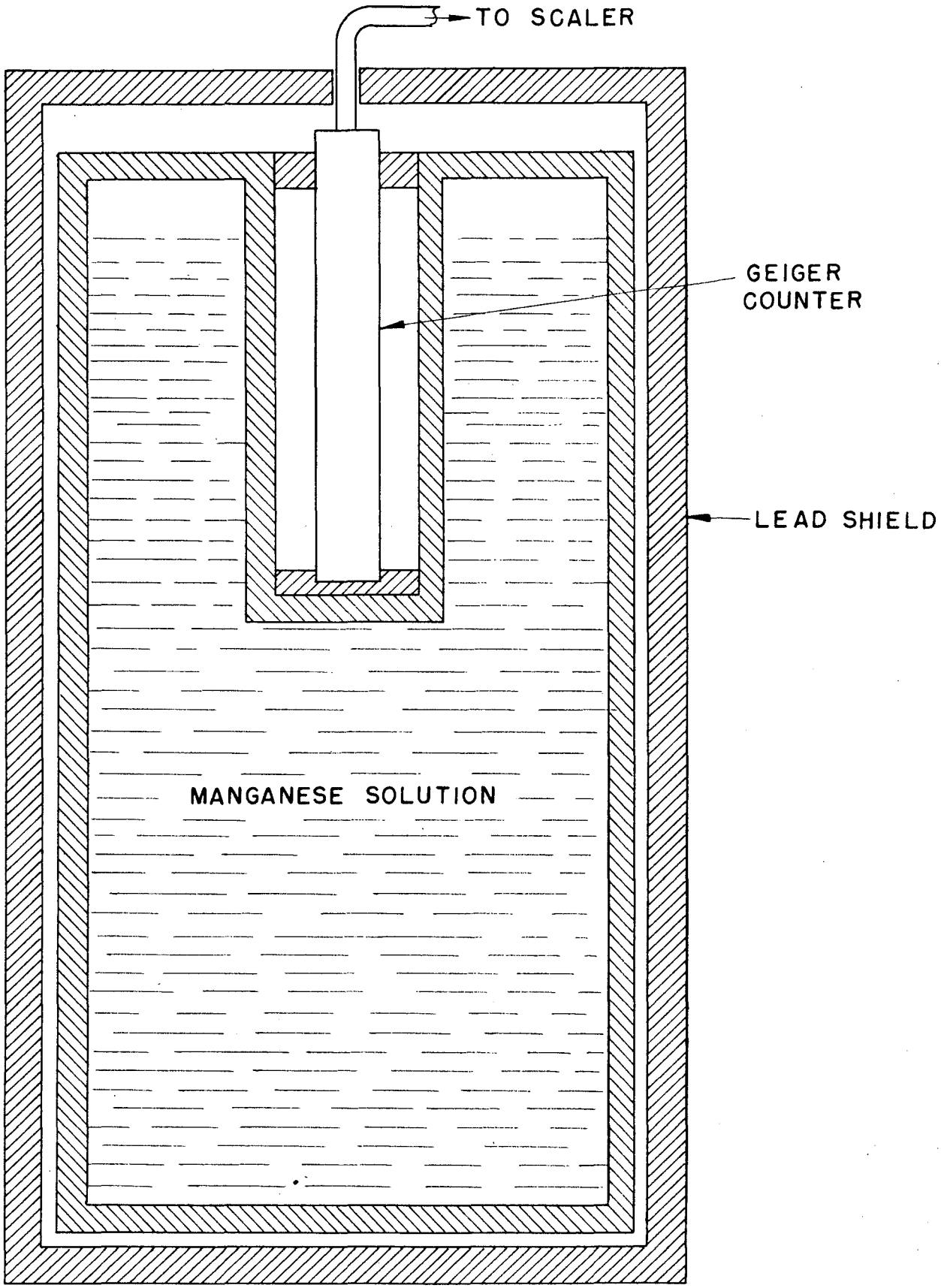

FIG. 4

MANGANESE BATH COUNTING ARRANGEMENT

13772-1

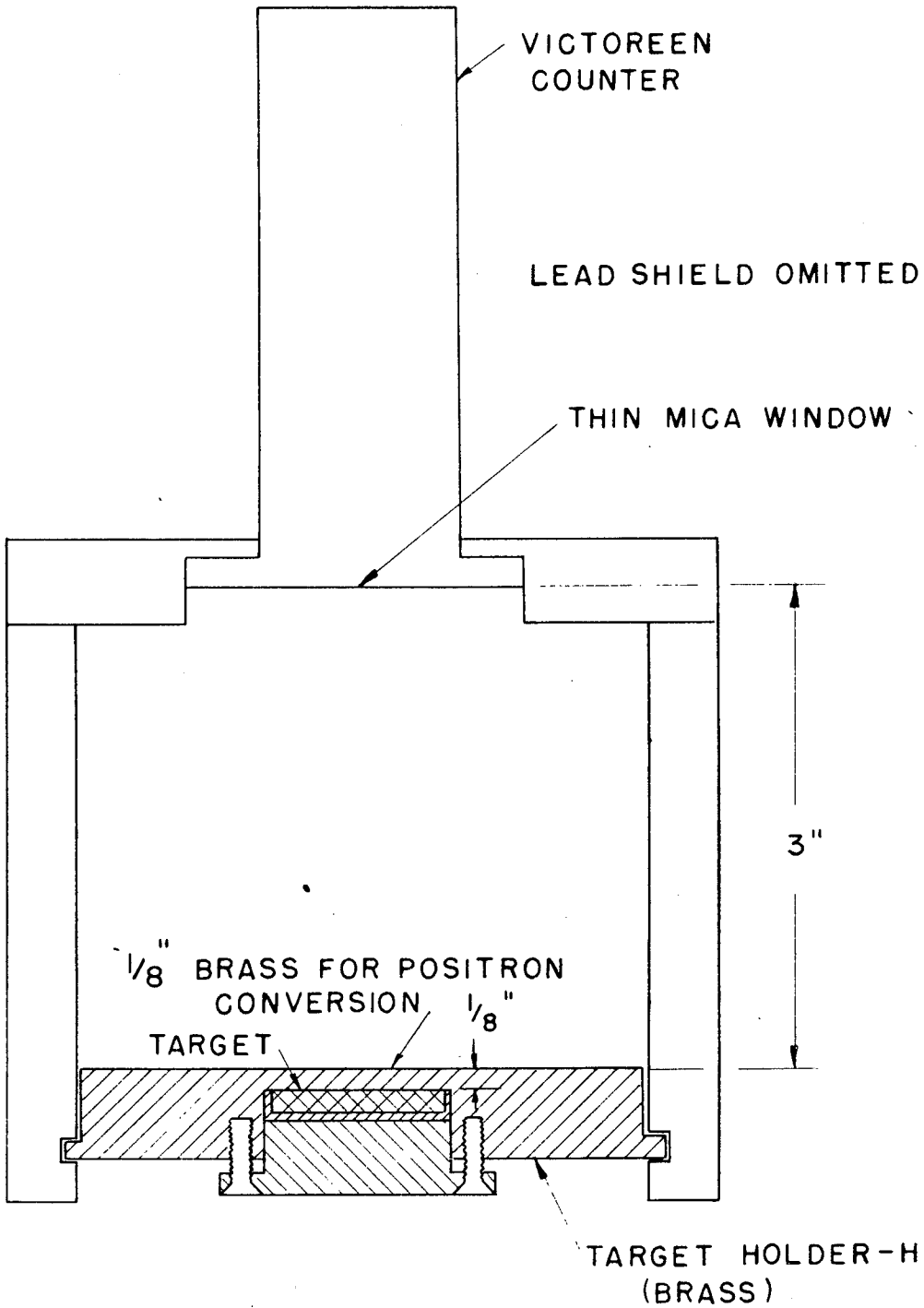

FIG. 5

TARGET COUNTING SETUP

13773-1

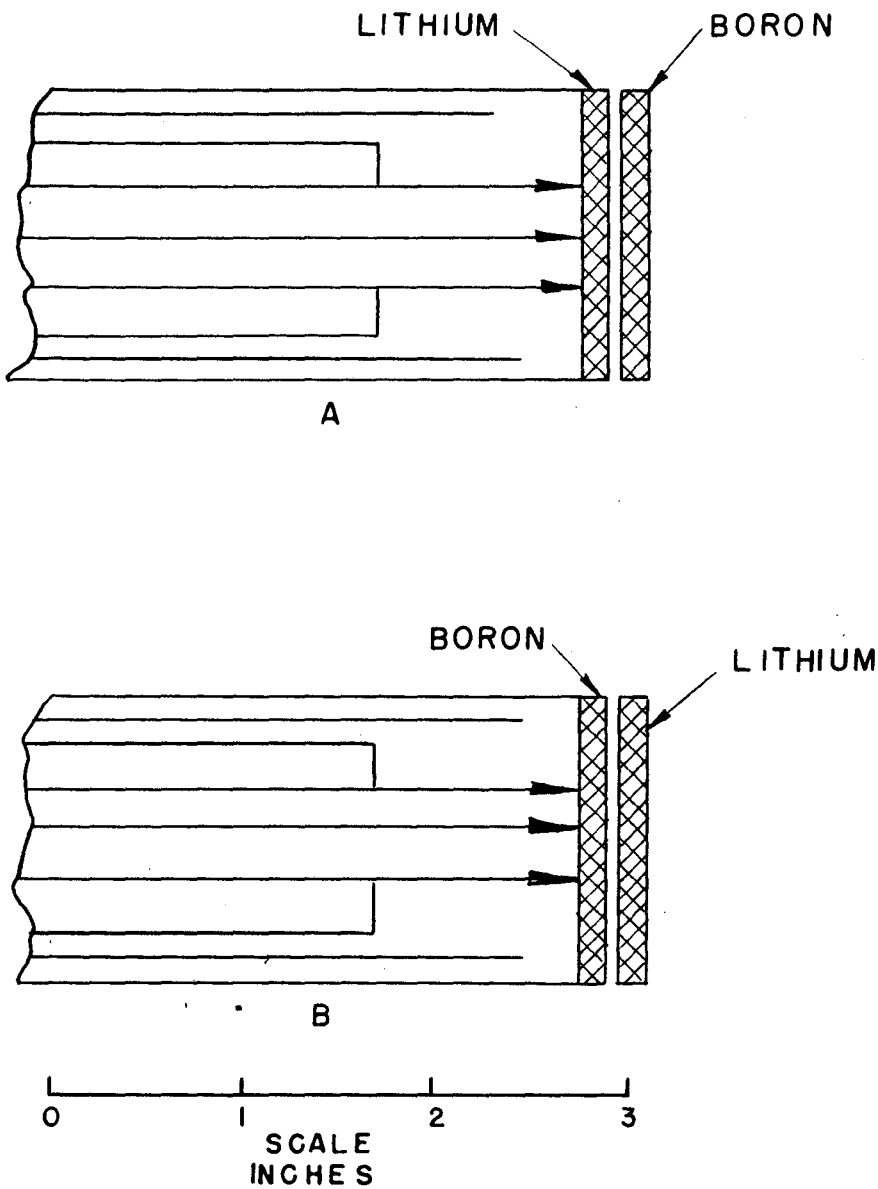

FIG. 6

DOUBLE TARGET SYSTEM TO KEEP NEUTRON ABSORBING GEOMETRY CONSTANT.