UCRL - 327 Rev.

UNIVERSITY OF CALIFORNIA

Radiation Laboratory

TWO-WEEK LOAN COPY

This is a Library Circulating Copy which may be borrowed for two weeks. For a personal retention copy, call Tech. Info. Division, Ext. 5545

BERKELEY, CALIFORNIA

UCRL-327 Rev.
c.2

DISCLAIMER

This document was prepared as an account of work sponsored by the United States Government. While this document is believed to contain correct information, neither the United States Government nor any agency thereof, nor the Regents of the University of California, nor any of their employees, makes any warranty, express or implied, or assumes any legal responsibility for the accuracy, completeness, or usefulness of any information, apparatus, product, or process disclosed, or represents that its use would not infringe privately owned rights. Reference herein to any specific commercial product, process, or service by its trade name, trademark, manufacturer, or otherwise, does not necessarily constitute or imply its endorsement, recommendation, or favoring by the United States Government or any agency thereof, or the Regents of the University of California. The views and opinions of authors expressed herein do not necessarily state or reflect those of the United States Government or any agency thereof or the Regents of the University of California.

UNIVERSITY OF CALIFORNIA
Radiation Laboratory

Cover Sheet
Do not remove

INDEX NO. UCRL-327 (Rev.)
This document contains 27 pages
and 8 plates of figures.
This is copy 92 of 98 Series A

DECLASSIFIED

~~CONFIDENTIAL~~

Classification

Issued to Info. Div.

Each person who receives this document must sign the cover sheet in the space below

Route to	Noted by	Date	Route to	Noted by	Date

UCRL-327 Revised

Chemistry-General

UNIVERSITY OF CALIFORNIA

Radiation Laboratory

DECLASSIFIED

Contract No. W-7405-eng-48

Classification cancelled by authority of the Office of Declassification 5-31-49
Date

THERMOCHEMICAL STUDIES OF OXIDES OF PRASEODYMIUM AND AMERICIUM AND THE ESTIMATION OF THE Pr^{+3}-Pr^{+4}, Am^{+3}-Am^{+4} OXIDATION POTENTIALS

L. Eyring, B. B. Cunningham, H. R. Lohr

April 19, 1949

Berkeley, California

DECLASSIFIED

Standard Distribution	Copy Nos.
Argonne National Laboratory	1-8
Armed Forces Special Weapons Project	9
Atomic Energy Commission, Washington	10-11
Battelle Memorial Institute	12
Brookhaven National Laboratory	13-22
Bureau of Ships	23
Carbide & Carbon Chemicals Corp. (K-25 Plant)	24-27
Carbide & Carbon Chemicals Corp. (Y-12 Plant)	28-31
Columbia University (Failla)	32
General Electric Company, Richland	33-38
Hanford Operations Office	39
Iowa State College	40
Kellex Corporation	41-42
Knolls Atomic Power Laboratory	43-46
Los Alamos	47-49
Massachusetts Institute of Technology (Kaufman)	50
Massachusetts Institute of Technology (Gaudin)	51
Mound laboratory	52-53
National Bureau of Standards	54-55
Naval Radiological Defense Laboratory	56
NEPA Project	57
New York Operations Office	58-59
North American Aviation, Inc.	60
Oak Ridge National Laboratory	61-72
Patent Branch, Washington	73
Sylvania Electric Products, Inc.	74
Technical Information Division, OROO	75-89
UCLA Medical Research Laboratory (Warren)	90
University of California Radiation Laboratory	91-95
University of Rochester	96-97
Western Reserve University (Friedell)	98
Total	98

Information Division
Radiation Laboratory
University of California
Berkeley, California

ABSTRACT

The heats of reaction of Pr_2O_3 and PrO_2 have been measured in 6.02 M HNO_3 to be 106.2 ± 0.3 and 42.4 ± 1.5 Kcal/mol respectively. The reaction heat with 6.0 M HNO_3 and 0.1 M HBF_4 of PrO_2 and AmO_2 was measured as 42.0 ± 1.0 and 30.4 ± 1.0 Kcal/mol. With these and other data an oxidation potential of -3.1 ± 0.2 volts was estimated for the Pr^{+3}-Pr^{+4} couple and -2.6 ± 0.2 volts as the potential of the Am^{+3}-Am^{+4} couple.

DECLASSIFIED

THERMOCHEMICAL STUDIES OF OXIDES OF PRASEODYMIUM AND AMERICIUM AND THE ESTIMATION OF THE Pr^{+3}-Pr^{+4}, Am^{+3}-Am^{+4} OXIDATION POTENTIALS

L. Eyring, B. B. Cunningham, H. R. Lohr

INTRODUCTION

A knowledge of the oxidation potential of the Am^{+3}-Am^{+4} couple is of fundamental importance in understanding the chemistry of americium, not only in aqueous solution but also in the form of solid compounds. This potential cannot be measured directly because the Am^{+4} ion decomposes water. Attempts to oxidize Am^{+3} ion in acid solution, even with argentic ion, have failed.[1]

Since americium forms an oxide in which it is in the tetravalent state, the oxidation potential can be estimated with reasonable confidence by thermochemical observations. These measurements and their treatment form the substance of this paper.

A knowledge of this potential would serve to indicate whether it is feasible by complexing, adjustment of the pH, or by other means to achieve oxidation in acid solution and thus to secure the basis for a rapid separation of americium and curium. Such a rapid separation would be of great value in nuclear studies dealing with the short-lived isotopes of these elements. In addition to this, a knowledge of this potential might make more evident such regularities as may exist in the oxidation-reduction equilibrium of the actinide elements. This would be of great value in the search for still heavier members of the actinide series.

Because of the hazardous nature of working with americium and particularly because of the very limited supply of that element, it was desirable

first to perform similar experiments on another material as a "stand in". Praseodymium was notably suited to this purpose because of its similar chemical and physical properties and because of the desirability of checking the literature values of its thermodynamic data.

NATURE OF THE PROBLEM

The method chosen to estimate the oxidation potential for Pr^{+3}-Pr^{+4} and Am^{+3}-Am^{+4} couples required the determination of the heats of solution of the dioxides of these elements. Since this reaction resulted in the immediate reduction to the trivalent cation in solution by the decomposition of water, it was also necessary to estimate as accurately as possible the heat which would be produced had the reduction not occurred. The only additional information required was the entropy change for the reaction

$$M^{+3} + H^{+} = M^{+4} + 1/2\ H_2 \ .$$

Previous thermodynamic measurements of plutonium supplied the data necessary to estimate the entropy change. The dioxides of americium and praseodymium were used for the determination of the heat of reaction since they were the only tetravalent compounds known in either system.

A microcalorimeter had been built for another purpose and was available.[2] It was, however, a type not suited to measurements of heat developed over a time longer than a very few minutes. As usually prepared, the oxides of elements in this region are difficultly soluble in ordinary solvents at room temperature. Some means, therefore, had to be found to reduce the solution time of these oxides to a maximum of about ten minutes. The reason for this limitation of reaction time was the large drift correction involved and the danger of change in thermostat or room temperature during the period of the calorimetric run.

It has long been known that prolonged heating at high temperatures renders most substances less reactive. Therefore, experiments were made to determine the mildest conditions of temperature and time which could be used to obtain the desired oxide as a single pure phase. X-ray diffraction on all samples was the criterion by which the composition and phase of the product was determined. Heat content of the oxide produced under these mild conditions is different from that of the usual standard state; this difference, however, is negligible in this case.

Praseodymium forms three known oxides[3] -- Pr_2O_3, Pr_6O_{11} and PrO_2. Americium forms a sequioxide and a dioxide. The methods of preparation and the stability of each will be discussed later.

As starting materials, hydroxides, nitrates, and oxalates were ignited in air to produce pure oxides. In all cases the decomposed oxalate gave the nicest, most reactive product. Qualitative tests showed that the oxides could be prepared with the solution properties shown in Table I. It should be pointed out that a non-reducing acid had to be used because the solution of PrO_2 or AmO_2 would otherwise lead to side reactions not entirely predictable.

Table I

Solubility of Praseodymium and Americium Oxides

Oxide	Approximate Solution Time in Minutes at Room Temperature		
	6 M HNO_3	6 M HNO_3 0.005 M Na_2SiF_6	6M HNO_3 0.1 M HBF_4
Pr_2O_3	2 - 3	--	--
Pr_6O_{11}	10	8 - 10	5
PrO_2	10	8 - 10	5
Am_2O_3	>30	4	--
AmO_2	>30	35	5 - 10

EQUIPMENT AND EXPERIMENTAL RESULTS

The praseodymium used in all the experiments to be described herein was obtained as "spectrographically pure" from Johnson, Matthey & Co., Ltd., of London. This material in the form of PrO_2 was found to contain about four percent sodium and potassium, and of the order of one-half of one percent other rare earths, principally neodymium. This relatively pure oxide was further purified by D. C. Stewart and R. C. Lilly of the University of California Radiation Laboratory by a cation-exchange column separation procedure using nalcite resin. The resulting material was quite free from any impurities as indicated by the following spectrographic analysis:

Micrograms per 50 microgram sample

Al	ND	K	ND
Ba	ND	La	ND $<$ .1
Be	ND $<$ .005	Lu	ND $<$ .1
Ca	$<$ .01	Na	ND
Ce	ND $<$ .1	Nd	ND $<$ .01
Dy	ND $<$ .1	Sm	ND $<$ .1
Er	ND $<$ .1	Sr	ND $<$ .01
Eu	ND $<$ .1	Ta	ND $<$ .5
Fe	ND	Tb	ND $<$ .1
Gd	ND $<$ .1	Yb	ND $<$ .1
Ho	ND $<$ .1	Y	ND $<$ .1

ND = not detected

The praseodymium from the column runs was precipitated as oxalate and ignited in air to the black oxide usually called Pr_6O_{11}. The ignition was carried out in a platinum container at about 650° C. This oxide constituted the stock material from which the succeeding praseodymium calorimeter samples were prepared.

Praseodymium Metal

At present the most likely value for the heat of solution of praseodymium metal was obtained somewhat indirectly by Bommer and Hohmann.[4] This represented a correction of about three kilocalories per mole to the previously accepted value from Bichowsky and Rossini.[5] It was desired to check these values by production of the pure metal and the direct measurement of its heat of solution in 1.5 M HCl at 25° C.

The method of production of praseodymium metal similar to that described by Westrum and Robinson[6] may be summarized briefly as follows: Pure Pr_6O_{11} was placed in the hydrogen reduction apparatus shown in Figure 1 and pumped down to remove all adsorbed moisture. The molybdenum radiation shield used to heat the oxide sample in the reduction apparatus was found to resist action of hydrogen at these high temperatures to a much greater degree than tungsten, tantalum, cold rolled steel or stainless steel. The chromel vs. alumel thermocouple was spot welded to the bottom of the platinum sample holder. About one-third atmosphere of pure hydrogen was admitted from a tube of uranium hydride maintained at 360° C. A discussion of this pure hydrogen source is given by Amos Newton.[7] It is especially good for such an apparatus as this because, in addition to the purity of the hydrogen produced, any desirable pressure can be maintained simply by adjusting the equilibrium temperature of the uranium hydride.

The oxide charge was heated to 500° C. and maintained at that temperature throughout the reduction. After two or three minutes the black oxide changed with an observable rate to yellow-green Pr_2O_3. No further decrease in weight was observed after one hour under these conditions. Therefore, an adequate time of one and one-half hours was adopted for the reduction to Pr_2O_3. X-ray diffraction results on this material consistently indicated the cubic C form with a = 11.14 ± 0.01 Å. When the temperature of this product was increased to 1000° C. in vacuum it changed over to the pale green hexagonal A form with a = 3.859 ± 0.003 Å, c = 6.008 ± 0.003 Å. If the Pr_6O_{11} is reduced at 1000° C., the A form is produced directly. The reaction at lower temperature may be represented as

$$Pr_6O_{11} + 2H_2 \xrightarrow[500^\circ\ C.]{1/3\ atm.\ H_2} \underset{C\ Form}{3Pr_2O_3} + 2H_2O\ .$$

This Pr_2O_3 was removed and placed in a platinum fluorination line[8] and treated with a 50 - 50 mixture of HF and hydrogen at 700° C. for one hour:

$$Pr_2O_3 + 6HF \longrightarrow 2PrF_3 + 3H_2O\ .$$

The praseodymium trifluoride from this treatment was reduced by barium vapor at 1100° C. in a beryllia crucible system supported by a tungsten furnace in high vacuum:

$$2PrF_3 + 3Ba \longrightarrow 2Pr + 3BaF_2\ .$$

The praseodymium metal thus produced always tended to spread out over the beryllia surface. Nevertheless, good calorimeter samples were made.

The metal was very malleable, had a bright grey metallic luster and readily formed a hydride at about 240° C. The metal samples submitted for X-ray analysis were never annealed enough to give good patterns.

The metal pellets, immersed in dry xylene in a "dry box", were very carefully cleaned under a microscope. They were weighed by difference directly into the calorimeter bulbs on a Kirk quartz microbalance.[9] This balance is sensitive to 10^{-8} grams and could reproduce the weight of the few hundred microgram samples of metal to a few hundredths percent accuracy. In order to use this balance, very fragile glass calorimeter bulb systems were made weighing less than twenty milligrams.

For the praseodymium metal, praseodymium sequioxide and one set of praseodymium dioxide calorimeter runs, the microcalorimeter described by Westrum and Eyring[2] was used without modification.

The microcalorimeter was again calibrated chemically using pure magnesium metal in 1.0 M HCl at 25° C. The results are shown in Table II.

Table II

Magnesium Metal Calibration Runs

Run No.	Weight-Mg.	Heat Evolved-Calories	-ΔH(Kcal/mol)
1	0.5280	0.2410	111.3
2	0.5866	0.2673	111.1
3	0.2861	0.1309	111.6
			111.3 ± 0.3

The best literature value of 111.322 ± .041 was determined under similar conditions by Shomate and Huffman.[10] Electrical calibrations were made with each run.

Consistent results on the heat of solution of praseodymium metal in 1.50 M HCl were not obtained. They ranged in value from 170.5 to 178 Kcal. per mole in seven runs, four of which were about 173 Kcal. There were no obvious

reasons why the runs should not agree since the samples were very carefully prepared and the operation of the calorimeter was normal.

Spectrographic analysis on the calorimeter solutions showed as impurities in the metal 0.1 - 0.4 percent beryllium and 2 - 6 percent barium. This may explain the variation in results. The high values were probably due to the presence of beryllium metal in the sample. Although it was present in low weight percent, its low atomic weight led to a high mole percent. Low results could be explained by the presence of barium or oxide in the metal. The spectrographic analysis at best is accurate to a factor of two, and within this limit the high heats of solution corresponded to high beryllium content. Lack of exact knowledge of impurities prohibited accurate calculations of the correction to be applied.

One would not expect the beryllia to be reduced under the conditions of metal production unless beryllium metal has a high heat of solution in praseodymium metal and/or the beryllia reacts with PrF_3 to give BeF_2, and PrOF, the first of which could be reduced by barium. Both reactions are thermodynamically possible.

In two runs the metal sample was divided into two portions and one used for a calorimeter run and the other for a hydrogen evolution measurement. Both determinations showed one to two percent more hydrogen evolution than would be calculated assuming pure praseodymium metal. This also could be attributed to the presence of beryllium metal. The apparatus used is shown in Figure 2 and consisted of a very small bulb attached to a calibrated capillary fixed to a meter stick. The metal sample was exposed to acid solution in the bulb and the volume of gas evolved measured by the movement of the liquid column in the capillary tube. A thermometer was fixed alongside the capillary and the

temperature noted carefully. Corrections were made to standard conditions of temperature and pressure.

It is difficult to give very much weight to these results, but, if anything, they seem to indicate that the result of Bommer and Hohman[4] of 172.9 ± 0.7 Kcal/mol is better than the lower previous literature value.

Praseodymium Sesquioxide.

Praseodymium sesquioxide was prepared as above and removed immediately into the dry atmosphere of a nitrogen "dry box". There it was quickly loaded into weighed sample bulbs and sealed off with Apiezon "W" wax ready for re-weighing and calorimetric runs.

The results of the determination of the heat of solution of praseodymium sesquioxide in 6.02 M HNO_3 at 25° C. are given in Table III.

Table III

Heat of Solution of Pr_2O_3 in 6.02 M HNO_3 at 25° C.

(a = 11.14 ± 0.01 Å)
C Form

Run No.	Weight Mg	Heat Evolved Calories	$-\Delta H$ Kcal/mol
1	7.312	2.355	106.2
2	4.109	1.324	106.3
3	4.539	1.459	106.0
			106.2 ± 0.2

Praseodymium Dioxide and Americium Dioxide

The essential measurements for determining the oxidation potentials of the Pr^{+3}-Pr^{+4} or Am^{+3}-Am^{+4} couples were the heats of solution of the dioxides in acid:

$$MO_2 + 3H^+ \longrightarrow M^{+3} + 1/4\ O_2 + 3/2\ H_2O\ .$$

This reaction included the heat of oxidation as well as the heat of the formation of the tripositive ion.

Upon heating Pr_2O_3 in oxygen at one atmosphere or in air, the resulting product upon cooling closely approximated the formula Pr_6O_{11} but the exact composition depended upon the conditions of the experiment.

In order to produce PrO_2 in a reasonable time, one must go to higher pressures of oxygen and temperatures of the order of 300° C. or higher. These conditions were achieved to produce the PrO_2 for calorimeter runs, that is, oxidizing a lower oxide with oxygen at very high pressures in a quartz bomb. The sesquioxide was used as the starting material since the product of that reaction was more readily soluble.

The bomb (Figure 3) consisted of a thick walled quartz tube of about 8 mm. OD and 2 - 3 mm. ID with a rounded bottom and a constricted portion at the other end. The constriction insured a thick wall when the end was sealed.

The Pr_2O_3 was loaded into the bomb and the open end attached to a system which was alternately evacuated and flushed with oxygen which was water and carbon dioxide free. The latter impurities were frozen out of tank oxygen in a copper coil kept at -100° C. by an alcohol-liquid nitrogen mixture. Finally, with oxygen in the bomb, the end was immersed in liquid nitrogen and oxygen was liquified in an amount previously calculated to produce 100 atmospheres pressure at 500° C. At this point the bomb was sealed off with a gas-oxygen flame. The quartz bomb was then placed in a stainless steel jacket which served as protection against possible explosion. The complete assembly was then put into a muffle furnace and heated at 500° C. for 8 - 12 hours. The resulting product was a reddish-black compound which consistantly showed a single fluorite

phase ($a = 5.395 \pm 0.005$ Å) by X-ray diffraction.

The bombs were opened and the material placed in a small phosphorous pentoxide desiccator inside a "dry box" ready for loading calorimeter bulbs.

The microcalorimeter was used to determine the heat of solution of PrO_2 in 6.02 M HNO_3 at 25° C. as given in Table IV.

Table IV

Heat of Solution of PrO_2 in 6.02 M HNO_3 at 25° C.

Run No.	Weight Mg	Heat Evolved Calories	$-\Delta H$ Kcal/mol
1	1.0042	0.2381	41.0
2	0.5712	0.1412	42.8
3	0.4722	0.1186	43.4
4	0.8412	0.2071	42.6
			42.4 ± 0.8

The solution time for these samples was from fifteen to twenty minutes and the drift correction amounted to some ten to twenty-five percent. This fact leads to the uncertainty shown by the results tabulated later. It is believed that this accuracy was as good as could be expected under the circumstances with the present apparatus.

The americium oxides did not dissolve in 6.02 M HNO_3, but dissolved in about ten minutes or less in 0.1 M HBF_4 and 6.0 M HNO_3. For this reason PrO_2 was run in the latter solution to determine the heat effect of complexing the Pr^{+3} ion with fluoride.

In order to use an acid solution containing F^- ion, all glass surfaces had to be replaced with HF resistant materials. Many coatings for the glass bulbs were tried including Zapon, Glyptal and plastic paint, but all these

showed a tendency to peel and expose fresh glass surface after the film had been ruptured. On the basis of these attempts it was decided to go to another bulb material. No substance was available which had the necessary properties of fluoride resistance and fragility in addition to the required workability in forming spheres to simply replace the glass bulbs. Hence, it was necessary to try an entirely different bulb type.

The material most suited for this work seemed to be polymonochlorotrifluoroethelene, a plastic which is resistant even to warm concentrated HNO_3 and HF and is easily machined. The bulb assembly finally designed which worked satisfactorily is shown in Figure 4.

A small disk was used to seal off the neck of the cone, which formed the body of the bulb, and the latter was sealed with wax to the large bottom disk. After the bulb was loaded and weighed it was sealed with Apiezon "W" wax to the end of the stirring shaft and broken by depressing it against an anvil in the bottom of the calorimeter. During loading and handling, the large bottom furnished a very stable base but its primary purpose was to make it possible to open the bulb without mashing the powdered sample into the wax. This was achieved by spot welding an auxiliary platinum anvil to the bottom of the calorimeter offset from the center to engage the periphery of the base as the bulb was depressed. This furnished a very effective way of flipping the bottom off in order that the inverted cone could be depressed over the central anvil to remove the nitrogen bubble which was present. In this way it seemed quite certain that all the oxide was contacted by the solution. The bulbs were quite sturdy and could be handled and loaded without serious danger of breaking them.

The sidewise thrust experienced when these bulbs were opened occasionally broke the thin glass stirring shaft ordinarily used. Therefore, it was necessary to replace this shaft with a stronger one. It was found that a forty mil tungsten shaft could be used for this purpose provided the top of the calorimeter was insulated and a very careful check made on the room temperature in this area. Experiments were performed to determine the effect of the change of the external temperature on the drift rate so that appropriate corrections could be made where necessary.

Four runs were made on PrO_2 dissolved in 6.0 M HNO_3 and 0.1 M $NaBF_4$. The solution time was decreased by at least a factor of three over the previously described runs or to about three or four minutes. Table V shows the results of these runs.

Table V

Heat of Solution of PrO_2 in 6.0 M HNO_3, 0.1 M $NaBF_4$ at 25° C.

Run No.	Weight Mg	Heat Evolved Calories	$-\Delta H$ Kcal/mol
1	0.827	0.2002	41.9
2	1.430	0.3471	42.0
3	1.229	0.3031	42.7
4	1.177	0.2818	41.4
			42.0 ± 0.4

The hazards involved in handling milligram quantities of powdered americium compounds are exceedingly great. For this reason, all operations involving preparation of materials, loading and weighing of samples and loading of the calorimeter had to be done in a "dry box" or "glove box". Weighing

the samples presented the most unique problem. It was solved by building a Salvioni type quartz microbalance which was calibrated and used for the PrO_2 runs and later mounted on the front panel of the "glove boxes" for the AmO_2 determination. A microscope support and microscope were fixed rigidly to the same front panel making possible weighing the bulbs on the safe interior of the "glove box". The balance had a sensitivity of 0.0694 micrograms per division of the filar micrometer. The readings on the micrometer could be made to about ten to twenty divisions or an uncertainty of about one microgram. This represented an error of about 0.1 - 0.2% of the total weight of the sample. A larger uncertainty of about 0.5% was due to the slight irreproducibility of the zero point on removing and replacing the bulb.

Pure americium from stock solution was precipitated with a small excess of pure oxalic acid and the dried oxalate decomposed in air at a temperature of 650° C. The spectrographic analysis on the stock solution was as follows:

Spectrographic Analysis
Micrograms per 50 microgram sample

Al	< 0.01	Fe	ND < .1
Be	ND < 0.005	K	ND < .1
Ca	0.02	Mn	ND < .01
Co	ND < .1	Na	ND < .01
Cr	ND < 0.01	Ni	ND < .01
		Pb	ND < .1

This treatment produced a black dioxide which was very slowly soluble under all conditions tried. The black AmO_2 was reduced with hydrogen at 600° C. in the apparatus previously described, forming Am_2O_3 which is a very bright persimmon (bright red-orange) color. This material was heated at about 250° C. for one

hour producing AmO_2 in a form soluble in sufficiently short time to be satisfactory. The dioxide was the same fluorite type structure as PrO_2 with a = 5.393 ± 0.005 Å.

Four runs were made in the calorimeter on AmO_2 yielding the values of $-\Delta H$ indicated in Table VI.

Table VI

Heat of Solution of AmO_2 in 6.0 M HNO_3, 0.1 M HBF_4

Run No.	Weight Mg	Heat Evolved Calories	$-\Delta H$ Kcal/mol
1	0.834	0.09062	29.7
2	0.672	0.07466	30.3
3	1.177	0.1326	30.8
4	1.449	0.1636	30.8
			30.4 ± 0.4

DISCUSSION OF RESULTS AND TREATMENT OF THE DATA

The calorimetric results reported here, together with data from the literature, make possible the calculation of the oxidation potentials for the Am^{+3}-Am^{+4} and Pr^{+3}-Pr^{+4} couples. The following equations for americium illustrate the method of calculation:

(1) $AmO_2 + 3H^+ = Am^{+3} + 1/4\ O_2 + 3/2\ H_2O$ ΔH_1

(2) $AmO_2 + 4H^+ = Am^{+4} + 2H_2O$ ΔH_2

(3) $1/2\ H_2 + 1/4\ O_2 = 1/2\ H_2O$ ΔH_3

---

(4) $Am^{+3} + H^+ = Am^{+4} + 1/2\ H_2$ ΔH_4

The heat of the first reaction was measured directly as -30.4 Kcal. The heat for the second reaction has been estimated from the data available for the other actinide elements. If the best values for the heats of formation of ThO_2, UO_2, NpO_2 and PuO_2[11,12,15,16] are plotted against the ionic radius of the corresponding tetrapositive cation, a reasonably smooth curve results. A short extrapolation of this curve yields an estimated heat of formation for AmO_2. In an analogous way the heat of formation of the tetravalent ions can be plotted and a similar extrapolation yields a value for Am^{+4}. These extrapolated values, together with the heat of formation of water, give the expected heat for reaction (2), which, of course, cannot be measured directly since the tetrapositive americium immediately oxidizes water. The alternative assumption that the difference between the heats of formation of the dioxide and tetrapositive ion is constant, e.g., $\Delta H\ PuO_2 - \Delta H\ Pu^{+4}$, $\Delta H\ UO_2 - \Delta H\ U^{+4}$, etc., is equivalent to extrapolating the curves since they have, to a considerable extent, been constructed on the basis of this assumption. The extrapolation yields

$$\Delta H_{f\,Am^{+4}} = 127 \text{ Kcal/mol and } \Delta H_{f\,AmO_2} = 248 \text{ Kcal/mol}$$

and

$$\Delta H_2 = -15.8 \text{ Kcal.}$$

This heat of solution is corrected to 6.0 M HNO_3 from the data of Bichowsky and Rossini[5] and is -15.1 Kcal.

The heat for reaction (3) was calculated as -34.2 from the data of Bichowsky and Rossini.[5]

The heat for reaction (4) is obtained from the other three:

$$\begin{aligned}\Delta H_4 &= \Delta H_2 - \Delta H_1 - \Delta H_3 \\ &= -15.1 + 30.4 + 34.2 \\ &= 49.5\ .\end{aligned}$$

The entropy change for reaction (4) may be obtained from the plutonium calculations of Evans.[13] For the reaction

$$Pu^{+3} + H^{+} = Pu^{+4} + 1/2\ H_2$$

an entropy change (ΔS) of -32.4 e.u. was calculated. It is impossible to make a magnetic entropy correction since the term for the ground state is not known. The corrections for mass differences and ionic radii are essentially zero. Therefore -32 e.u. has been used as the entropy ΔS_4.

From ΔH_4 and ΔS_4 the free energy (ΔF_4) may be calculated:

$$\Delta F_4 = \Delta H_4 - T\Delta S_4$$

$$= + 49.5 - (-32 \times 10^{-3} \times 298) = 59.0$$

and

$$E_4 = -\frac{\Delta F}{nF} = \frac{-59}{23.07} = -2.6 \text{ v.}$$

The large negative potential for this couple is consistant with chemical evidence since Am^{+3} was not oxidized in sulfuric acid solution of argentic ion. The potential of $Ag^{+} - Ag^{++}$ is about -2.2 v. under these conditions.[1]

In an analogous way the potential for Pr^{+3}-Pr^{+4} can be calculated. From the data above $\Delta H_1' = -42.0$, $\Delta H_2' = -15.1$ (Note: Since Pr^{+4} ion is the same size as Am^{+4} ion, the AmO_2-Am^{+4} heat difference was assumed.), $\Delta H_3' = -34.2$.* The entropy change for reaction (4)' was taken as -32 e.u. as above.

$$\Delta H_4' = -15.1 + 42.0 + 34.2 = 61.1$$

$$\Delta F_4' = 61.1 - (-32 \times 10^{-3} \times 298) = 70.6$$

$$E_4' = \frac{-70.6}{23.07} = -3.1 \text{ v.}$$

* (Primed values refer to Pr values similar to americium above.)

A check on the praseodymium calculation is possible using the heat of solution of Pr_2O_3.

(a) $PrO_2 + 4H^+ = Pr^{+4} + 2H_2O$ $\Delta H_a = -15.1$

(b) $1/2\ Pr_2O_3 + 3H^+ = Pr^{+3} + 3/2\ H_2O$ $\Delta H_b = -53.1$

(c) $1/2\ Pr_2O_3 + 1/4\ O_2 = PrO_2$ $\Delta H_c = -12.0$

(d) $1/2\ H_2 + 1/4\ O_2 = 1/2\ H_2O$ $\Delta H_d = -34.2$

(a)-(b)+(c)-(d) = (f) = $Pr^{+3} + H^+ = Pr^{+4} + 1/2\ H_2$ $\Delta Hf = 60.2$

The heat of reaction (c) is obtained by using the heat of formation of Pr_2O_3 given by Brewer[11] and the heat of formation of PrO_2 calculated from equation (1)' above.

One then calculates

$$E = -\frac{69.7}{23.07} = -3.0 \text{ volts}$$

The relatively higher value for the praseodymium potential is in qualitative agreement with the observed fact that AmO_2 is more easily prepared than PrO_2, and, of course, was shown directly in the more negative heat of solution of the PrO_2.

The thermodynamic data for cerium[14] could not be used as an aid or check on the above calculations since at the acid concentrations used in the calorimetric measurements the Ce^{+4} ion must certainly be hydrolyzed. Data are not available which would enable the calculation of the heat of hydrolysis of ceric ion.

The reason for the extraordinary stability of $Ce(OH)^{+3}$ ion is not understood. This being the case, it is possible that the corresponding $Am(OH)^{+3}$ ion might also be highly stable. In this event, oxidation of Am^{+3}

to $Am(OH)^{+3}$ could occur at a potential considerably less negative than has been estimated here.

The heat of formation of the fluoride complex of americium is not known and hence a correction could not be made for the heat of reaction in the solution containing fluoride ion. Measurements were made, as tabulated above, on the heat of solution of PrO_2 with and without the 0.1 M HBF_4 in 6.0 M HNO_3, and the heat of solution was different by not more than one-half Kilocalorie per mole. Heat of solution of the $ThCl_4$ in 6 M HCl and 6 M HCl containing 0.005 M Na_2SiF_6 differed by only three-tenths Kilocalorie per mole of $ThCl_4$.

The errors indicated in the tabulated data of Table VII are not the average deviation for the measurements made, but indicate the possible error in the large corrections necessary for the slowly soluble samples.

Table VII

Recapitulation

	ΔH	E
$1/2\ Pr_2O_3 + 3H^+ \overset{6\ M\ HNO_3}{=} Pr^{+3} + 3/2\ H_2O$	-106.2 ± 0.2	
$PrO_2 + 3H^+ \overset{6\ M\ HNO_3}{=} Pr^{+3} + 1/4\ O_2 + 3/2\ H_2O$	-42.4 ± 1.5	
$PrO_2 + 3H^+ \underset{0.1\ M\ HBF_4}{\overset{6\ M\ HNO_3}{=}} Pr^{+3} + 1/4\ O_2 + 3/2\ H_2O$	-42.0 ± 1.0	
$AmO_2 + 3H^+ \underset{0.1\ M\ HBF_4}{\overset{6\ M\ HNO_3}{=}} Am^{+3} + 1/4\ O_2 + 3/2\ H_2O$	-30.4 ± 1.0	
$Am^{+3} + H^+ = Am^{+4} + 1/2\ H_2$	49.5 ± 5	-2.6 ± 0.2 v.
$Pr^{+3} + H^+ = Pr^{+4} + 1/2\ H_2$	61.1 ± 5	-3.1 ± 0.2 v.

ACKNOWLEDGEMENT

The authors express their appreciation of the many who have so willingly and able assisted in the course of this research. Winifred Heppler has been of great aid in the experimental work. Herman P. Robinson has saved many a situation with his expert advice. The X-ray diffraction work was done by David H. Templeton, Carol Dauben and Lee Jackson; the spectrographic analysis by John Conway and Milton Moore. The Health Chemistry group was helpful in freely offering advice and aid in handling radioactive materials.

This work was performed under the auspices of the Atomic Energy Commission at the Radiation Laboratory, University of California, Berkeley, California.

BIBLIOGRAPHY

1. Cunningham, B. B., The Isolation and Chemistry of Americium, AECD 1879 (1948)

2. Westrum, E. F., Jr. and Eyring, L., unpublished work.

3. Prandtl, W. and Huttner, K., Concerning the Black Oxides of Praseodymium, Zeitschrift fur Anorganische Chemie, 14, 235-262 (1925)

4. Bommer, H. and Hohmann, E., Heats of Solution of the Rare Earth Metals, Zeitschrift fur Anorganische und Allgemeine Chemie, 248, 357-396 (1941)

5. Bichowsky, F. R. and Rossini, F. D., Thermochemistry of Chemical Substances, Reinhold Publishing Corp., 1936.

6. Westrum, E. F., Jr. and Robinson, H. P., The Heat of Formation of Plutonium Trichloride, CC 3872 (1948)

7. Newton, A. S., The Purification of Some Laboratory Gases, MDDC 724

8. Westrum, E. F., Jr. and Eyring L., unpublished work.

9. Kirk, P. L.; Rodrerick, Craig; Gullberg, J. E. and Boyer, R. J., Analytical Chemistry, 19, 427 (1941).

10. Shomate, C. H. and Huffman, E. H., JACS 65, 1625 (1943).

11. Brewer, L., The Thermodynamic Properties of the Oxides, UCRL-104 (1948)

12. Brewer, L.; Bromley, L. A.; Gilles, P. W. and Lofgren, N. L., The Thermodynamic Properties and Equilibria at High Temperatures of Uranium Halides, Oxides, Nitrides and Carbides, BC82. (1947)

13. Evans, M. W., The Heats and Entropies of Pu(III), Pu(IV), and Pu(VI) in 0.5 M Perchloric Acid at 25° C, MDDC-1206 (1947)

14. Sherrill, M. S.; King, C. B. and Spooner, R. C., The Oxidation Potential of Cerous-Ceric Perchlorates, JACS 65, 170-179 (1943).

15. Brewer, L.; Bromley, L. A.; Gilles, P. W. and Lofgren, N. L., The Thermodynamic Properties and Equilibria at High Temperatures of the Compounds of Plutonium, BC-88 (1947)

16. Brewer, L., The Estimation of Heats of Formation, AECD-1911 (1948)

17. Latimer, Wendell M., The Oxidation States of the Elements and Their Potentials in Aqueous Solutions. Prentice-Hall, Inc. (1938)

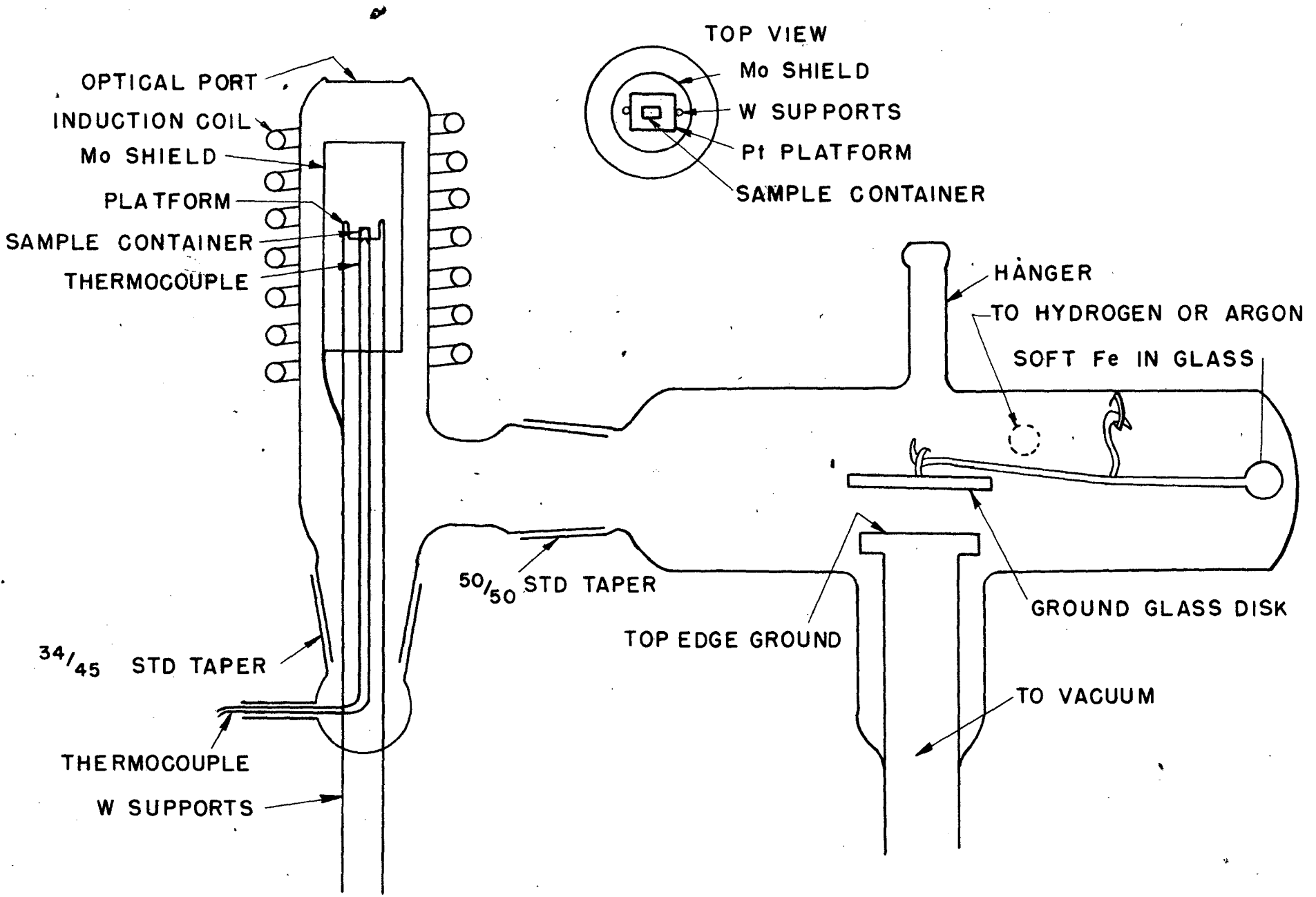

FIG. 1

HYDROGEN REDUCTION APPARATUS

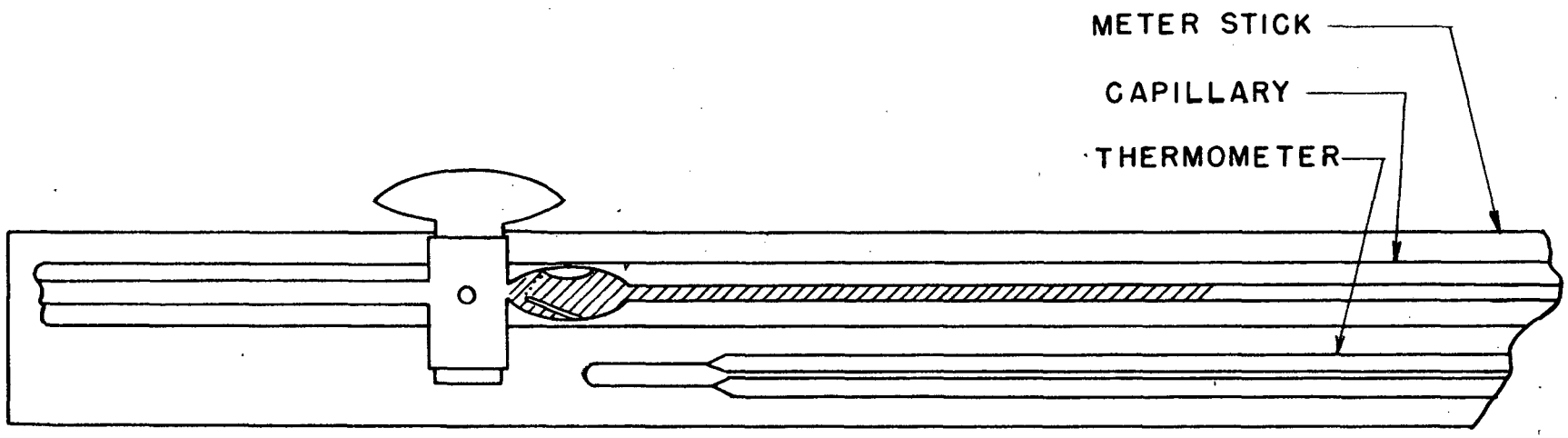

FIG. 2

HYDROGEN EVOLUTION APPARATUS

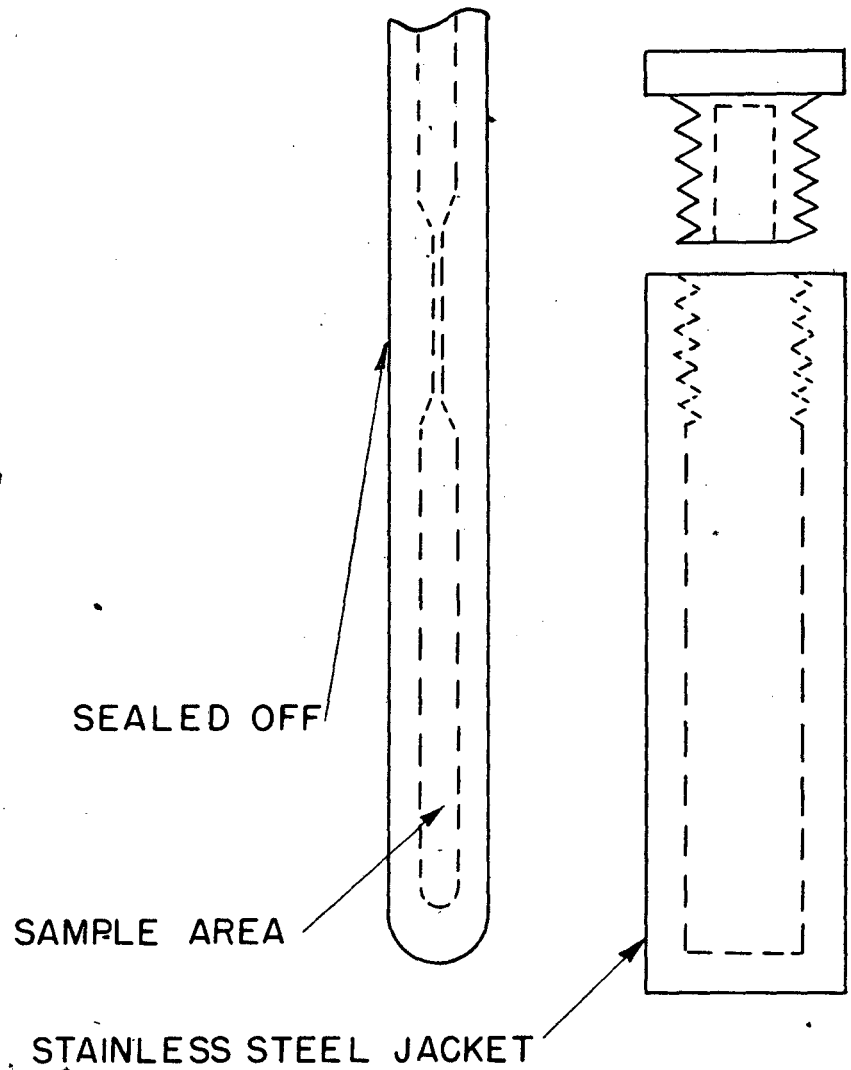

FIG. 3
OXYGEN BOMB

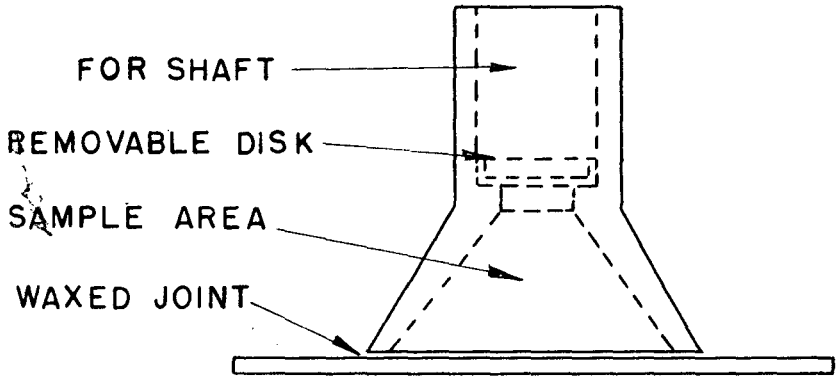

FIG. 4

FLUORETHANE MICROCALORIMETER BULB

SCALE 1" = .080"

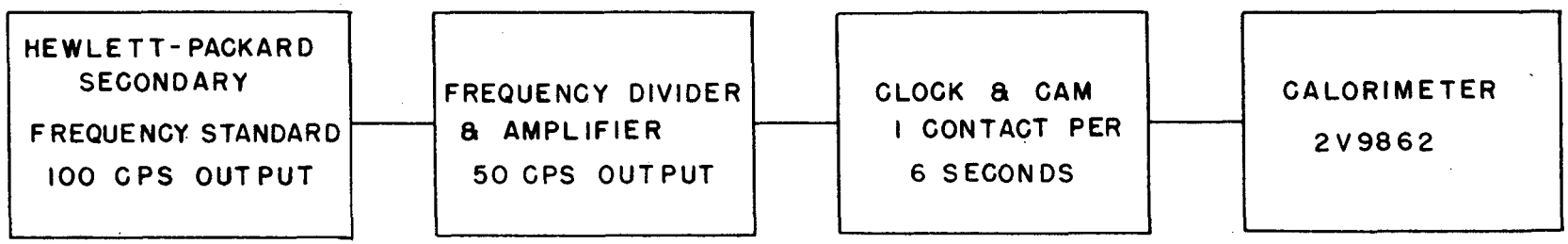

FIG. 5

MICROCALORIMETER
TIME STANDARD
BLOCK SCHEMATIC

13639-F

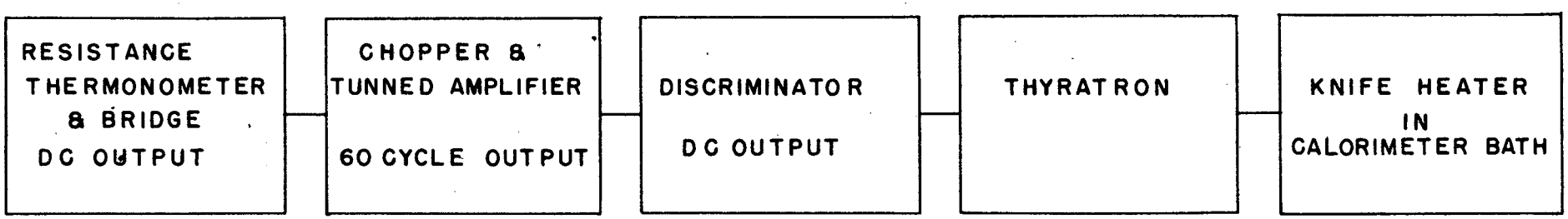

FIG. 6

MICROCALORIMETER
TEMPERATURE CONTROL
BLOCK SCHEMATIC

MICROCALORIMETER PARTS LIST FOR FIGURE 7

Designation	Quantity	Specifications
R-1	1	300 ohms, 25 watts, W.W. potentiometer
R2,R3,R4,R5	4	285 ohms, consisting of 400 ohms, 10 watts, W.W. in parallel with 1000 ohms, 10 watts, W.W.
R6	1	8300 ohms, W.W.
R7	1	.5 megohm manganin
R8	1	50,000 ohms manganin
R9	1	29.84 ohms(IRC precision manganin, non-inductively wound on ceramic core, immersed in oil bath)"standard resistor"
R-10	1	10,000 ohms manganin
R-11	1	10 ohms manganin
R-12,R27	2	0-9999 ohms, L & N decade resistance box
R-13	1	350 ohms manganin
R-14	1	42 ohms manganin
R-15	1	12.5 ohm potentiometer, W.W.
R-16	1	125 ohm potentiometer, W.W.
R-17,R23,R26,R29, R-33	5	1000 ohms manganin (R26 immersed in oil bath)
R-18	1	55.0 ohms manganin (immersed in oil bath)
R-19	1	15 ohms, manganin
R20	1	100 ohms manganin
R21	1	300 ohms manganin
R22	1	5 ohms manganin (immersed in oil bath)
R24	1	~53 ohms at 25°C, copper resistance thermometer,non-inductively wound with manganin leads
R25	1	91.5 ohms, manganin (immersed in oil bath)
R28	1	33,300 ohms manganin (immersed in oil bath)
R30, R31	2	500 ohms manganin
R32	1	50 ohms copper damping resistor
R34	1	150 ohms manganin
R35	1	3750 ohms manganin
B-1	1	14 volts: 7 heavy duly lead storage cells
B2	1	1.0189 volts: Weston standard cell
B3	1	2 volts: lead storage cell
B4	1	4 volts: 2 lead storage cells
PB-1,PB2	2	Push-button contacts, normally open
Lt-1	1	6 volt pilot light, green
Lt2	1	6 volt pilot light, red
Lt3	1	110 volt pilot light, green
Re-1	1	SPST relay, 115 volts AC, normally closed
Re2	1	DPDT impulse relay, Advance type 904A, 115 volts AC, silver contacts
Me-1	1	Rubicon galvanometer, .006 μa/mm,368 ohm coil, cal. 3402 HH
Me2	1	Leeds & Northrup high sensitivity galvanometer. Sensitivity .077 μv/mm, C.D.R.X. 28 ohms, coil resistance 21 ohms, period 8.8 seconds
S-1,S9	2	6-position, single-circuit tap-switch
S2,S3,S8	3	SPDT copper knife-switch
S4,S6	2	SPDT toggle-switch
S5	1	DPST toggle-switch
S7	1	SPDT copper knife-switch with pole added so that R-32 is connected before remainder of circuit
-1	1	Pri. 115 V a.c., Sec. 6.3 v, 1 amp. C. T.

Note: All manganin resistors are IRC type WW-4 or equivalent. Some values are made by paralleling two or more resistors.

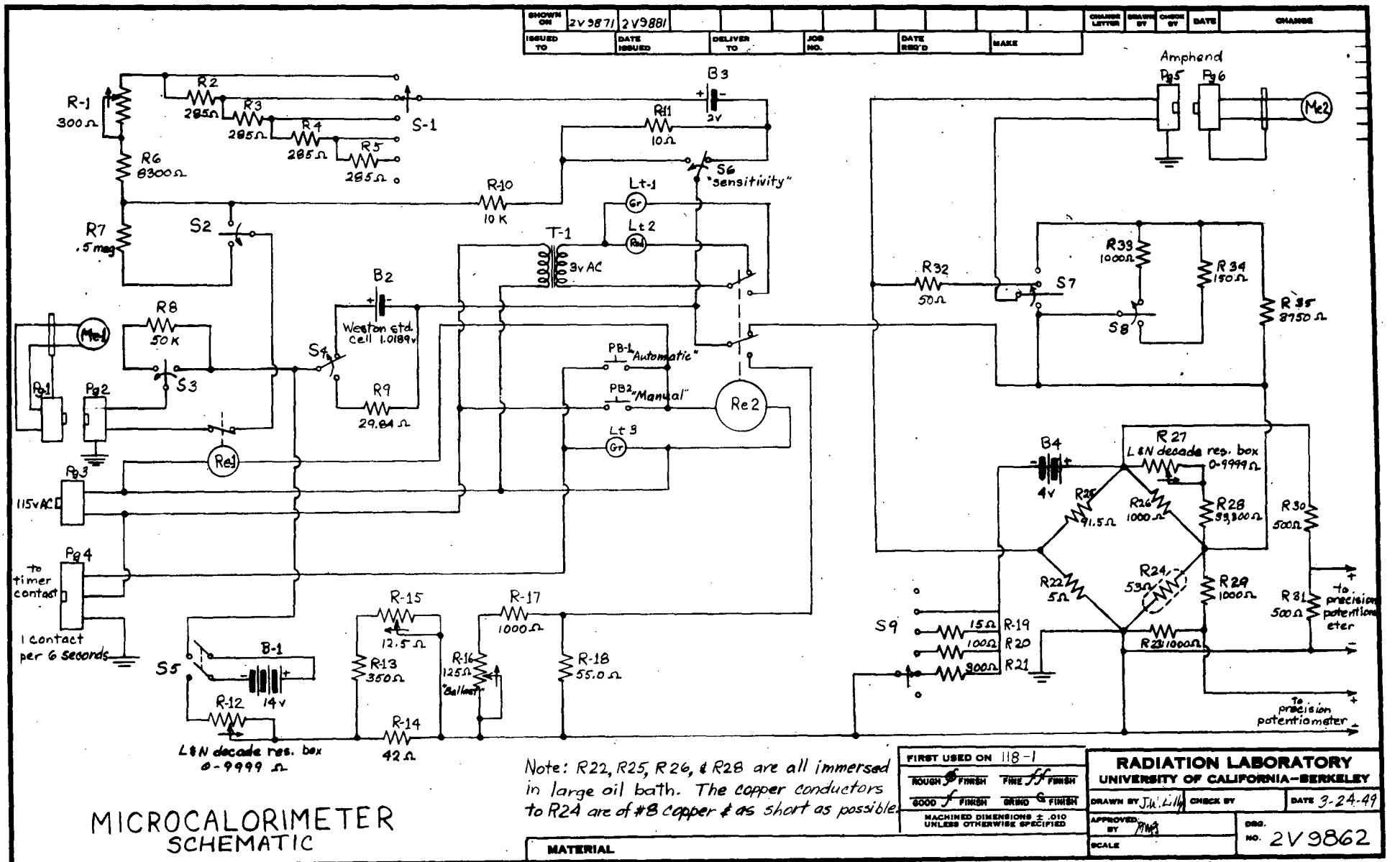
SHOWN ON 2V9871 2V9881
ISSUED TO
DATE ISSUED
DELIVER TO
JOB NO.
DATE REQ'D
MAKE
CHANGE LETTER
DRAWN BY
CHECK BY
DATE
CHANGE
R-1 300Ω
R2 285Ω
R3 285Ω
R4 285Ω
R5 285Ω
S-1
R6 8300Ω
R7 .5 meg
S2
R8 50K
S3
Me1
Pg1
Pg2
Re1
Pg3
115vAC
Pg4
to timer contact
1 contact per 6 seconds
B3 2v
R11 10Ω
S6 "sensitivity"
R-10 10K
Lt-1
Lt 2
T-1 3v AC
B2
Weston std. cell 1.0189v
S4
R9 29.84Ω
PB-1 "Automatic"
PB2 "Manual"
Re2
Lt 3
Amphend
Pg5
Pg6
Me2
R32 50Ω
S7
R33 1000Ω
R34 150Ω
S8
R35 8750Ω
B4 4v
R27 L&N decade res. box 0-9999Ω
R25 91.5Ω
R26 1000Ω
R28 33,300Ω
R30 500Ω
R22 5Ω
R24 53Ω
R29 1000Ω
R31 500Ω
to precision potentiometer
S9
15Ω R-19
100Ω R20
300Ω R21
R23 1000Ω
To precision potentiometer
R-15 12.5Ω
R-17 1000Ω
R-13 350Ω
R-16 125Ω "Ballast"
R-18 55.0Ω
S5
B-1 14v
R-12
L&N decade res. box 0-9999 Ω
R-14 42Ω
Note: R22, R25, R26, & R28 are all immersed in large oil bath. The copper conductors to R24 are of #8 copper & as short as possible.
FIRST USED ON 118-1
ROUGH FINISH
FINE FINISH
GOOD FINISH
GRIND FINISH
MACHINED DIMENSIONS ± .010 UNLESS OTHERWISE SPECIFIED
MATERIAL
RADIATION LABORATORY
UNIVERSITY OF CALIFORNIA—BERKELEY
DRAWN BY J.W. Lilly
CHECK BY
DATE 3-24-49
APPROVED BY
SCALE
DRG. NO. 2V9862
MICROCALORIMETER SCHEMATIC
"ALBANENE" 1951, K. & E. CO., N. Y. REG. U. S. PAT. OFF.

FIG. 7

OZ 425

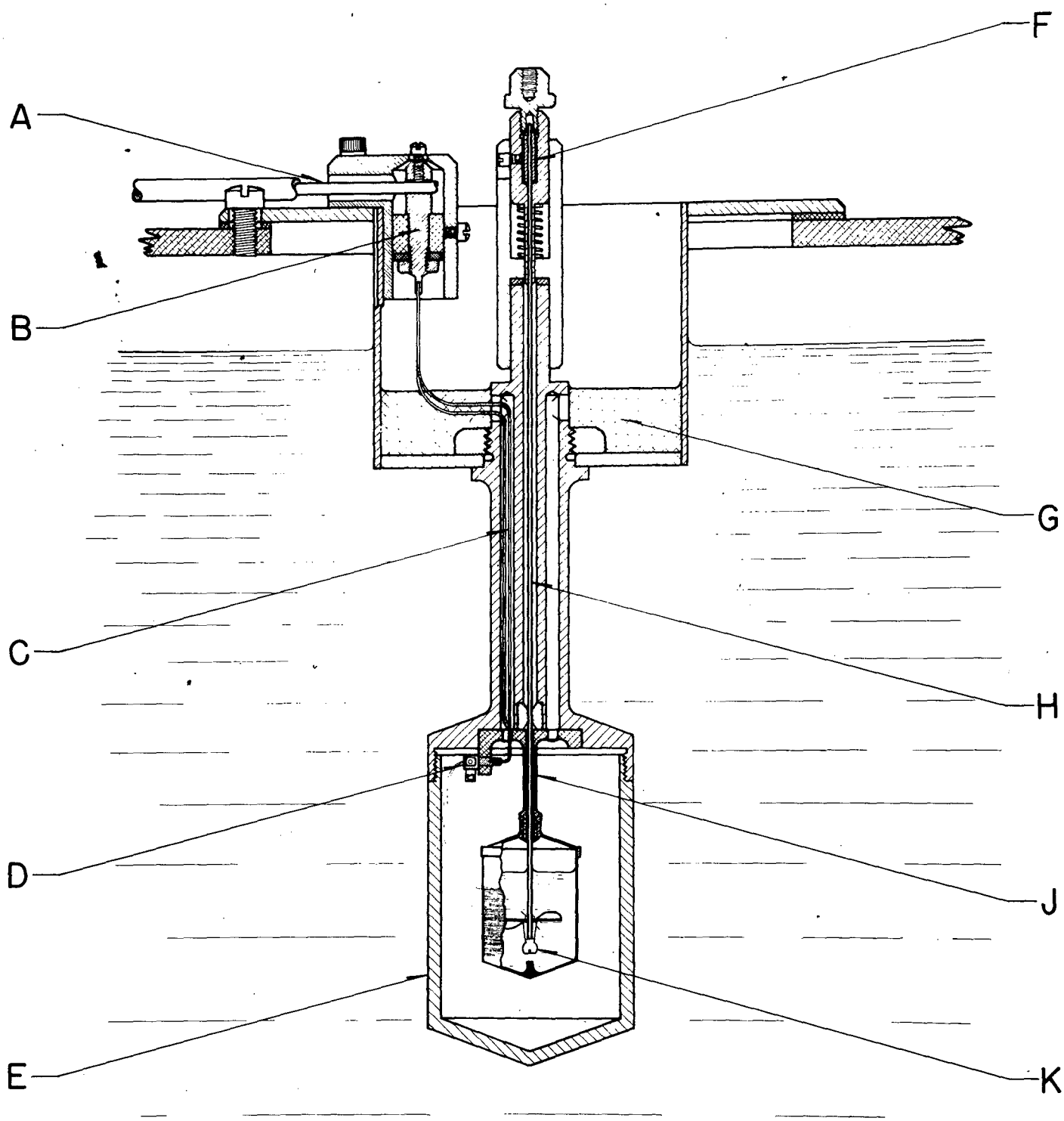

FIG. 8

MICROCALORIMETER CROSS SECTION

A. HEAVY COPPER LEAD
B. COPPER TERMINAL POST
C. MANGANIN LEAD
D. COPPER JACK
E. STAINLESS STEEL SUBMARINE SHELL
F. BAKELITE COLLET
G. PARAFFIN
H. STIRING SHAFT
J. LUCITE HANGER
K. SAMPLE BULB

CM 0 1 2 3 4 5