UCRL-3307 Rev. 4

December 15, 1966

Lawrence Radiation Laboratory, University of California, Berkeley

UCRL-3307 (Rev. 4) Counting Handbook

We assume that you have recently received the counting notes included in Revision 3 dated October 1, 1966.

Your Counting Handbook will be up-to-date after making the following changes:

ADD	REMOVE
	CC 1-2A
CC 5-8B	CC 5-8A
CC 6-5B	CC 6-5A

Thank you.

Dick A. Mack
Physics Instrumentation

DAM/mlr

RECEIVED
LAWRENCE
BERKELEY LABORATORY

AUG 18 1978

LIBRARY AND
DOCUMENTS SECTION

DISCLAIMER

This document was prepared as an account of work sponsored by the United States Government. While this document is believed to contain correct information, neither the United States Government nor any agency thereof, nor the Regents of the University of California, nor any of their employees, makes any warranty, express or implied, or assumes any legal responsibility for the accuracy, completeness, or usefulness of any information, apparatus, product, or process disclosed, or represents that its use would not infringe privately owned rights. Reference herein to any specific commercial product, process, or service by its trade name, trademark, manufacturer, or otherwise, does not necessarily constitute or imply its endorsement, recommendation, or favoring by the United States Government or any agency thereof, or the Regents of the University of California. The views and opinions of authors expressed herein do not necessarily state or reflect those of the United States Government or any agency thereof or the Regents of the University of California.

October 1, 1966

Lawrence Radiation Laboratory, University of California, Berkeley

COUNTING HANDBOOK

CHECK LIST

NOTE: Circle the Counting Note number which is missing, fill in your name at the bottom of Page 2, and return to Dick A. Mack.

FILE NUMBER	DATE	FILE NUMBER	DATE
Contents			
CC 1-2A Pages 1 - 2.	12-15-63	CC 3-12 Pages 1 - 2.	1-10-64
CC 1-4 Pages 1 - 10	1-10-56	CC 3-13 Pages 1 - 2.	1-13-64
CC 1-6 Pages 1 - 2.	1-14-64	CC 3-14 Pages 1 - 2.	1-10-64
CC 1-7 Pages 1 - 8.	2-6-64	CC 3-15 Pages 1 - 11.	3-11-64
CC 1-8 Pages 1 - 7.	2-15-66	CC 3-16 Pages 1 - 2.	2-15-66
CC 2-1B Pages 1 - 13.	7-26-66	CC 4-6 Pages 1 - 4.	6-8-64
CC 2-2C Pages 1 - 19.	5-31-66	CC 5-6 Pages 1 - 5.	4-10-56
CC 2-6B Pages 1 - 15.	5-28-64	CC 5-7 Pages 1 - 2.	4-10-56
CC 3-5B Pages 1 - 2.	3-11-64	CC 5-8A Pages 1 - 11.	11-5-63
CC 3-10A Pages 1 - 8.	12-15-63	CC 5-9A Page 1.	9-3-66
CC 3-11 Pages 1 - 7.	11-21-60	CC 6-5A Pages 1 - 10.	6-30-66

FILE NUMBER	DATE	FILE NUMBER	DATE
CC 6-6 Pages 1 - 12.	6-10-64	CC 9-10 Pages 1 - 8.	4-2-64
CC 6-7 Pages 1 - 5.	2-10-64	CC 9-11 Pages 1 - 3.	2-15-66
CC 6-8 Pages 1 - 4.	8-10-64	CC 10-1 Pages 1 - 6.	1-10-59
CC 8-2C Pages 1 - 13.	12-21-64	CC 10-3 Pages 1 - 9.	12-24-58
CC 8-3B Pages 1 - 5.	7-21-66	CC 10-4 Pages 1 - 8.	3-15-61
CC 8-4A Pages 1 - 14.	3-5-64	CC 10-5 Pages 1 - 6.	6-20-62
CC 8-5A Pages 1 - 11.	6-30-66	CC 10-6 Pages 1 - 3.	1-13-64
CC 8-20 Pages 1 - 8.	12-29-58	CC 10-7 Pages 1 - 4.	1-14-64
CC 8-30 Pages 1 - 11.	1-21-59	CC 10-8 Pages 1 - 4.	1-13-64
CC 8-31 Pages 1 - 11.	3-16-61	CC 10-9 Pages 1 - 3.	1-14-64
CC 9-5C Pages 1 - 2.	8-2-66	CC 10-10A Pages 1 - 8.	6-30-66
CC 9-8A Pages 1 - 8.	2-15-66	CC 10-11 Pages 1 - 3.	2-15-66
CC 9-9 Pages 1 - 2.	1-13-64	CC 10-12 Pages 1 - 3.	3-15-66
		CC 10-13 Pages 1 - 3.	8-3-66

Circle any missing notes and return list to:

Index _____

Mr. Dick A. Mack
University of California
Lawrence Radiation Laboratory
Berkeley, California, U.S.A. 94720

Name _____

Address _____

_____

_____

October 1, 1966

Lawrence Radiation Laboratory, University of California, Berkeley

COUNTING HANDBOOK

REVISION NUMBER 3

Please follow the Filing Instructions below to revise your Counting Handbook. To be sure that your Handbook is up to date, check your contents with the enclosed Check List after inserting the changes which are enclosed.

We will supply any missing sheets.

FILING INSTRUCTIONS:

ADD	REMOVE
Contents (10-1-66)	Contents (6-5-64)
CC 1-8 (2-15-66) Pages 1 - 7	
CC 2-1B (7-26-66) Pages 1 - 13.	CC 2-1A (2-12-64) Pages 1 - 13.
CC 2-2C (5-31-66) Pages 1 - 9.	CC 2-2B (2-28-64) Pages 1 - 19.
	CC 2-5 (2-1-58) Pages 1 - 2.
	CC 3-4B (2-12-64) Page 1.
	CC 3-9A (3-1-61) Pages 1 - 9.
CC 3-11 (11-21-60) Page 7 only.	
CC 3-16 (2-15-66) Pages 1 - 2.	
CC 5-9A (8-3-66) Page 1.	CC 5-9 (2-5-64) Page 1.
CC 6-5A (6-30-66) Pages 1 - 10.	CC 6-5 (2-26-64) Pages 1 - 9.

ADD	REMOVE
CC 6-8 (8-10-64 Pages 1 - 4.	
CC 8-3B (7-21-66) Pages 1 - 5.	CC 8-3A (3-5-64) Pages 1 - 5.
CC 8-5A (6-30-66) Pages 1 - 11.	CC 8-5 (6-27-62) Pages 1 - 11.
CC 9-5C (8-2-66) Pages 1 - 2.	CC 9-5B (2-28-64) Pages 1 - 2.
	CC 9-7B (12-1-59) Pages 1 - 8.
CC 9-8A (2-15-66) Pages 1 - 8.	CC 9-8 (3-27-61) Pages 1 - 3.
CC 9-11 (2-15-66) Pages 1 - 3.	CC 10-2 (3-27-58) Pages 1 - 10.
CC 10-10A (6-30-66) Pages 1 - 8.	CC 10-10 (2-12-64) Pages 1 - 5.
CC 10-11 (2-15-66) Pages 1 - 3.	
CC 10-12 (3-15-66) Pages 1 - 3.	
CC 10-13 (8-3-66) Pages 1 - 3.	

UCRL-3307 (Rev. 3)

UNIVERSITY OF CALIFORNIA

Lawrence Radiation Laboratory
Berkeley, California

AEC Contract No. W-7405-eng-48

LAWRENCE RADIATION LABORATORY COUNTING HANDBOOK

Edited by

Nuclear Instrumentation Groups

October 1, 1966

PREFACE

The Counting Handbook is a compilation of operational techniques and performance specifications on counting equipment in use at the Lawrence Radiation Laboratory, Berkeley. Counting notes have been written from the viewpoint of the user rather than that of the designer or maintenance man. The only maintenance instructions that have been included are those that can easily be performed by the experimenter to assure himself that the equipment is operating properly.

Suggestions for additional notes to be included in future revisions of the Handbook are most welcome.

Mary Lou Rentler and Mary Thibideau were responsible for the final typing of the counting notes; we greatly appreciate their patience and fine work.

October 1, 1966

TABLE OF CONTENTS

	Section
AMPLIFIERS	CC 1
Summary of Nanosecond Pulse Amplifiers	CC 1-2A
Evaluation of HP-460A and B Amplifiers	CC 1-4
Logic Amplifier 20 V Output	CC 1-6
Pulse Amplifier	CC 1-7
Dual 1Ns - DCx10 Amplifier	CC 1-8
CABLES AND COAXIAL COMPONENTS	CC 2
Pulse Response of Coaxial Cables	CC 2-1B
Physical Characteristics of Coaxial Cables	CC 2-2C
Nanosecond - Pulse Transformers, Attenuators and Terminators	CC 2-6B
COINCIDENCE SYSTEMS AND DISCRIMINATORS	CC 3
Radiation Laboratory Amplitude Discriminators	CC 3-5B
Dual 3-Channel Positive Input Coincidence and Anti-Coincidence Unit, Model 3	CC 3-10A
Pulse-Amplitude Discriminator Model 2 and 3	CC 3-11
4-Way "AND", 1 "INHIBIT" Circuit	CC 3-12
5-Way "OR" Circuit	CC 3-13
5-Way Fanout	CC 3-14
Time-to-Height Conversion System	CC 3-15
5-Way Fanout	CC 3-16
COMPONENTS FOR AMPLITUDE ANALYSIS	CC 4
Summary of Pulse Height Analyzer Manufacturer's Data	CC 4-6
DEFINITIONS AND STANDARDS	CC 5
Definition of Performance Measurement	CC 5-6
Definition of Pulse Terms	CC 5-7
Definitions of Terms Related to Phototubes	CC 5-8A
Logical Voltage Levels	CC 5-9A
ELECTRONIC CIRCUITS FOR SPARK CHAMBERS	CC 6
Spark Gap Trigger Amplifier	CC 6-5A
Spark Chamber Energy Distribution Box	CC 6-6
A High Voltage Probe for Nanosecond Pulses	CC 6-7
15 Kv 20 ma Spark Chamber Booster Supply	CC 6-8
OSCILLOSCOPES & MONITORING	CC 7

PHOTOMULTIPLIERS AND SCINTILLATORS	CC 8
Multiplier Phototube, Manufacturers' Data	CC 8-2C
Phototube Measuring Techniques	CC 8-3B
6810 Class Photomultiplier Special Characteristics	CC 8-4A
Particle Detection by Scintillation Counters	CC 8-5A
Electrical Gating of Multiplier Phototubes	CC 8-20
A Generator of Fast Light Pulses for Photomultiplier Tube Testing	CC 8-30
Corona Light Pulsers	CC 8-31
SCALERS AND READOUT EQUIPMENT	CC 9
Radiation Laboratory Scalers Operating Characteristics	CC 9-5C
Decade Scaler, Model 5	CC 9-8A
Register Unit	CC 9-9
A Decade Scaler and Readout System	CC 9-10
10 MHz Decade Scaler	CC 9-11
WAVEFORM GENERATORS AND POWER SUPPLIES	CC 10
Mercury Pulsers	CC 10-1
Nanosecond Pulse Generator	CC 10-3
Gated Pulse Generator	CC 10-4
Del-a-gate	CC 10-5
Delay Gate	CC 10-6
Relay Driver	CC 10-7
Pulse Generators	CC 10-8
Pulse Generator	CC 10-9
High-Voltage Power for Multiplier Phototubes	CC 10-10A
Dual Delay Gate	CC 10-11
Pulse Generator	CC 10-12
Nuclear Instrument Module Bin	CC 10-13

Radiation Laboratory, University of California, Berkeley.

File No. CC 1-4
Page 1
Jan. 10, 1956
Frank Evans

COUNTING NOTE

DISTRIBUTED AMPLIFIERS

ABSTRACT: Distributed amplifiers may be used to amplify pulses having rise times less than 10^{-8} sec. The output pulses will be produced with negligible overshoots if the frequency response at the high end closely approximates a Gaussian characteristic. Saturation and cutoff characteristics of most distributed amplifiers permit their use as limiters. The Hewlett-Packard 460A and 460B, having individual rise times of 2.6×10^{-9} sec., are good examples of these amplifiers.

TEXT: By the cascading of individual stages, amplifiers can be designed to give appreciable gain over bandwidths of the order of tens of megacycles. The limitation here is the ratio of transconductance to the sum of input and output capacitances available in vacuum tubes at present. The distributed amplifier design, (1), (2), furnishes means of isolating the effects of individual tube capacitances, and, at the same time, of taking advantage of the transconductance in an additive manner for many tubes in parallel. The input circuit consists of grids tapped in spacially along an artificial, or lumped, transmission line of which the tube input capacitances form a part. Similarly the plates are tapped into a second transmission line. An input pulse will travel down the first line, and cause each tube to conduct in sequence. Current pulses from the plates will travel in both directions in the second line. In one direction these pulses add together and travel toward the output or load. The pulses traveling in the reverse direction are absorbed by an internal resistive termination. In this manner sizeable gains may be achieved over bandwidths of hundreds of megacycles.

The Hewlett-Packard 460A and 460B distributed amplifiers are designed primarily as pulse amplifiers but under some restrictions they may be used for CW. In general the 460B is intended for higher signal levels than the 460A. Both units have rise times of 2.6×10^{-9} sec., although the 460A has more gain into a matched load. Frequently the 460A is used to amplify pulses directly from the anode of a photomultiplier, while the 460B, because of its greater output capabilities, might be used to drive directly the vertical deflection plates of a high speed cathode ray tube.

The front panel of the 460A is shown below in Fig. 1.

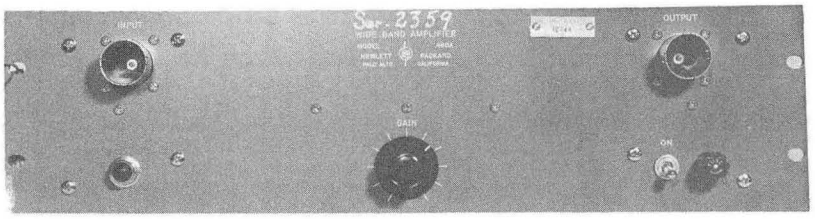

Fig. 1 Hewlett Packard 460A - Front view.

Aside from the ON-OFF power switch, the only control accessible is the GAIN. This control determines the grid bias, and consequently the transconductance, of the five 6AK5 (or 5654, in late models) tubes comprising the first stage. Since the 460A is a two stage distributed amplifier (the second stage consists of 7 tubes) there is no inversion of an input pulse. The input and output connectors shown are to be used with 200 ohm Transradio C3-T cable assemblies. If it should be desired

to connect cables having an impedance other than 200 ohms to the input connectors, then adapters having the appropriate resistive termination must be used. For example, the HP 46A-95C adapter may be used where a type N connection is needed on a 50 ohm cable. In addition to the GAIN control, the overall gain (and to some degree the bandwidth and rise time) may be changed by providing other output terminations. Since the output impedance is rated at 280 ohms, the gain will vary according to the relation $\frac{24 Z_T}{280+Z_T}$, where Z_T is the effective terminating impedance. The rated gain of 10 applies for Z_T=200 ohms.

Several 460A amplifiers may be cascaded if necessary. The rise time for n cascaded units is given by the expression $2.6 \times 10^{-9} \sqrt{n}$. For 200 ohm connections, the output broadband noise should be less than $6 \times 10^{n-5}$ volts rms. up to the saturation region. This is based on the rated noise figure of less than 10 db.

The front panel of the 460B is shown below in Fig. 2.

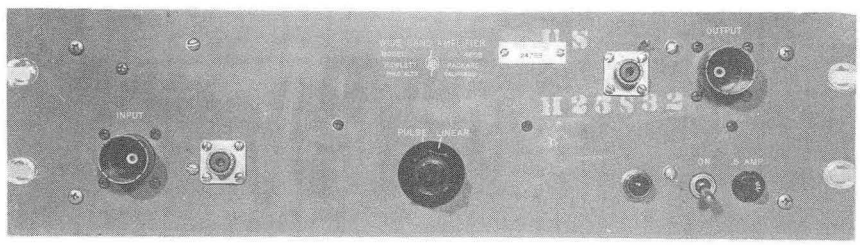

Fig. 2. Hewlett-Packard 460B - Front view.

The amplifier consists of one stage of 13 tubes. Consequently, there is a reversal of polarity. There are two modes of operation, either one of which may be selected at the PULSE-LINEAR control. In the LINEAR position the amplifier has a gain of 5.6 and is capable of delivering, with good linearity, ± 8 volt peak pulses into 200 ohms. Except for inversion of the input signal and lower gain, the amplifier is similar to the 460A in this position. In the PULSE position however, the amplifier is capable of delivering a -125 volt pulse into an open circuit, and has an open circuit large signal gain of 16. This is accomplished by switching onto the grids a bias sufficient to cut the tubes nearly off and, onto the plates and screens, a higher B + voltage for obtaining more swing at the output.

Block diagrams for both amplifiers are shown below in Figs. 3 and 4.

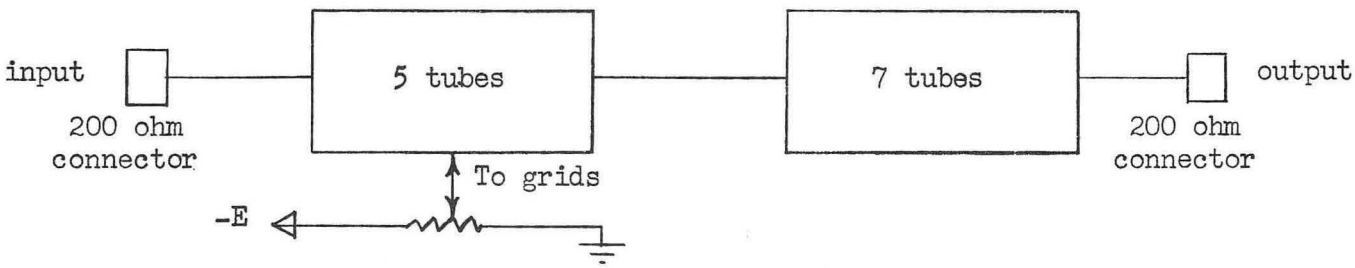

Fig. 3. Hewlett-Packard 460A - Block diagram.

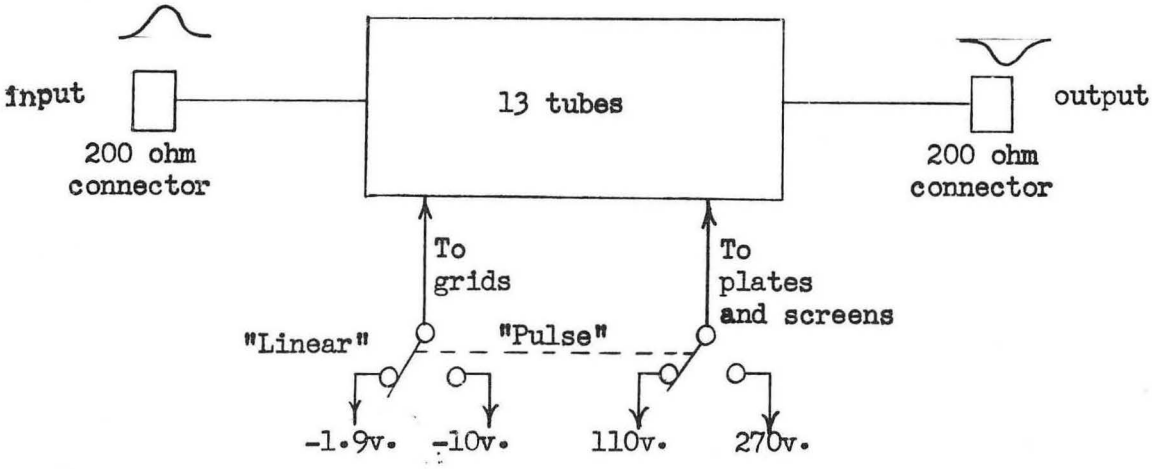

Fig. 4. Hewlett-Packard 460B - Block diagram.

In the 460B photographed in Fig. 2, Type 83 connectors have been added in parallel with the 200 ohm connectors as a laboratory modification. A comparison between using 125 ohm RG63 cable with type 83 connectors and using 200 ohm cable with the standard connectors is shown below in Fig. 5(a) with the circuit sketched in Fig. 5(b).

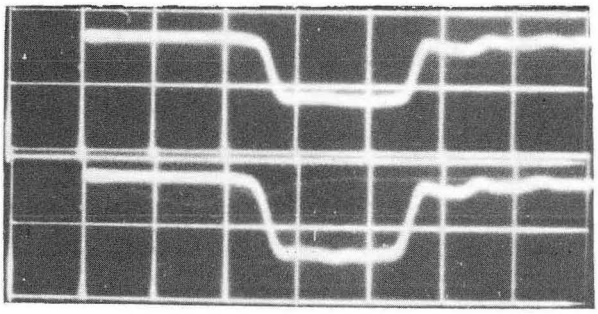

Z_T = 125 ohms (with 83 connectors)

Z_T = 200 ohms

Fig. 5(a). Pulse shapes at output of HP 460B Sweep = 10^{-8} sec/cm.

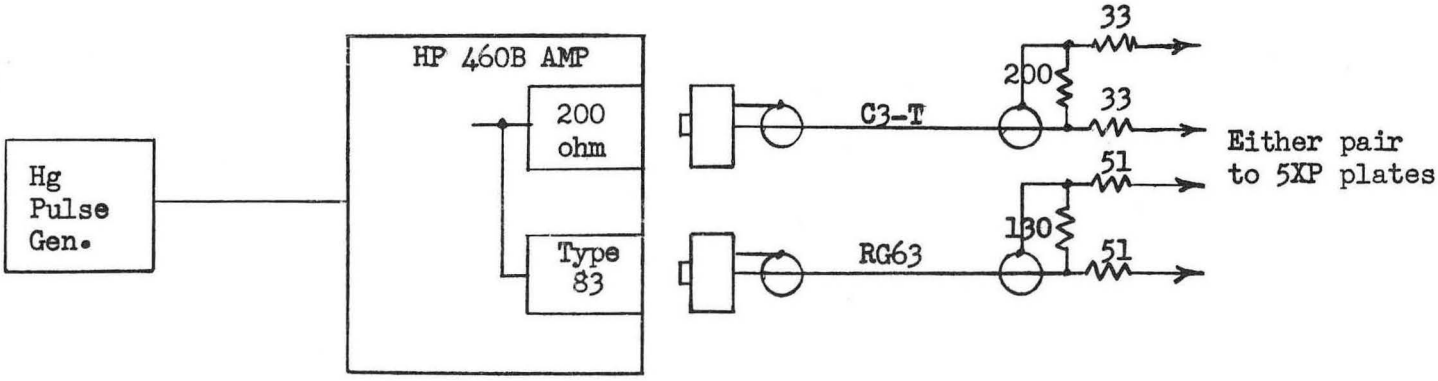

Fig. 5(b). Circuit for comparison of connectors on output of HP 460B.

The upper photograph in Fig. 5(a) is the observed output signal for a 2 x 10^{-8} sec. pulse with the 125 ohm cable joined to the amplifier through the type 83 connector which is in parallel with the unterminated 200 ohm connector. The lower photograph is the single 200 ohm connection with the type 83 chassis connector removed from the circuit. The amplitude of the pulse is of course different in the two cases, but there is no marked difference in the rise times. Adding other type 83 connectors in the 125 ohm line will result in small (about 3%) differentiated reflections, but again these do not lead to significant changes in the rise time. The conclusion then is that the type 83's may be used in most applications where the resolving time is not less than that of the amplifier itself and may be used more than once in cases where small differentiated reflections may be tolerated.

It is of interest to note the performance of these amplifiers as the pulse length is decreased below the resolving time. This is shown in progressive fashion for the HP 460B in Fig. 6 below

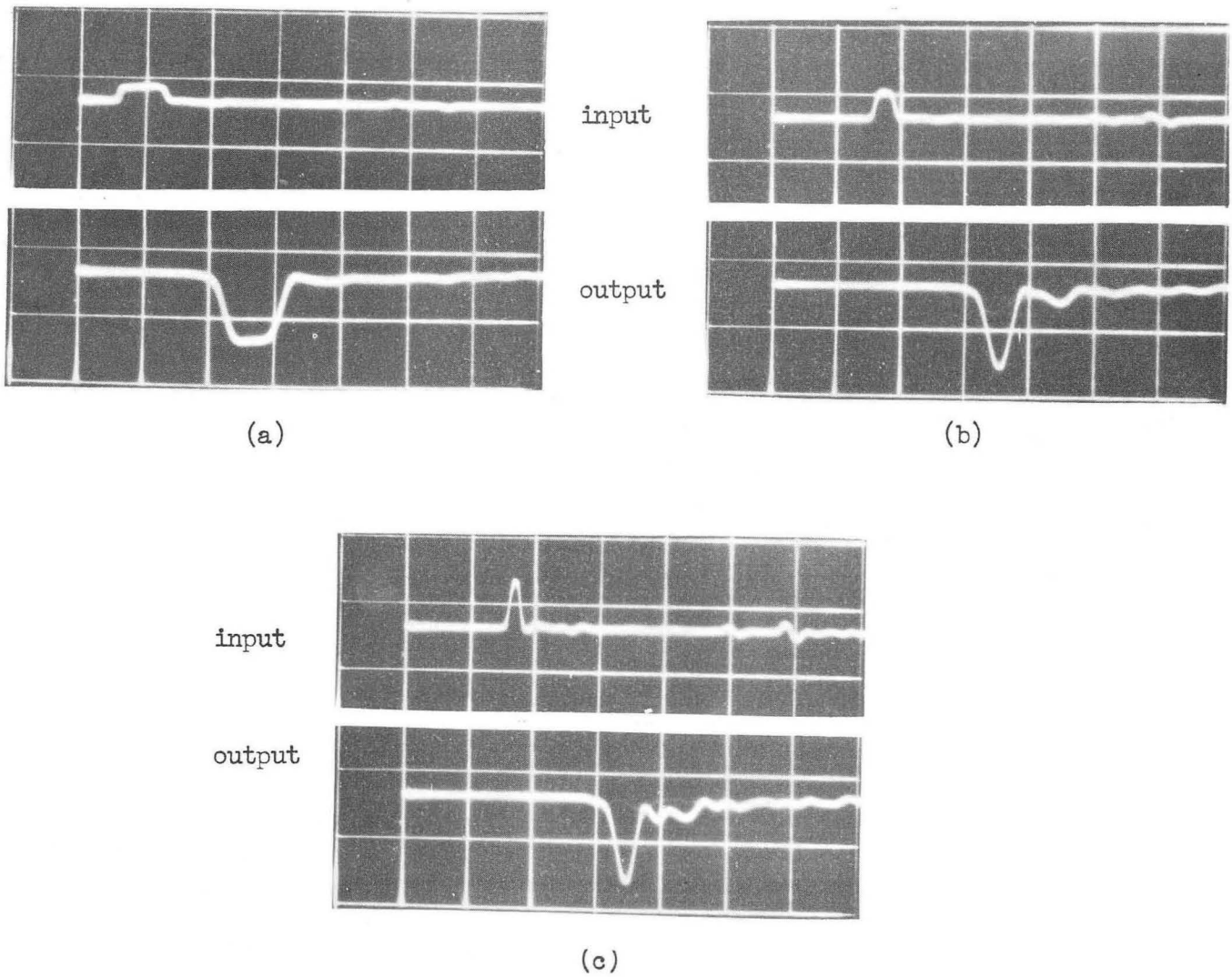

Fig. 6. Transmission in HP 460B for short pulses Sweep = 10^{-8} sec/cm.

The input pulse, shown in the upper half of each photograph, was adjusted in amplitude for an output of approximately 1 cm. Fig. 6(2) shows a flat top pulse for both input and output, indicating the rated pulse gain and rise time. In 6(b) the pulse has been narrowed down to about the rise time of the amplifier, and more amplitude is required for the same output. In addition, products due to phase distortion are beginning to appear. In 6(c) the pulse has been further narrowed so that there is about unity gain on the peak amplitude and a considerable increase in the relative amplitudes of the distortion products.

When large input pulses are applied the HP units will perform as limiters. Saturation in the positive output direction will occur at lower voltages than in the negative direction. In either case the effects of reflections in the amplifier delay lines should be considered. For the observation of input reflections at large signal levels the arrangement of Fig. 7 was used for separating the incident pulse from the reflected components.

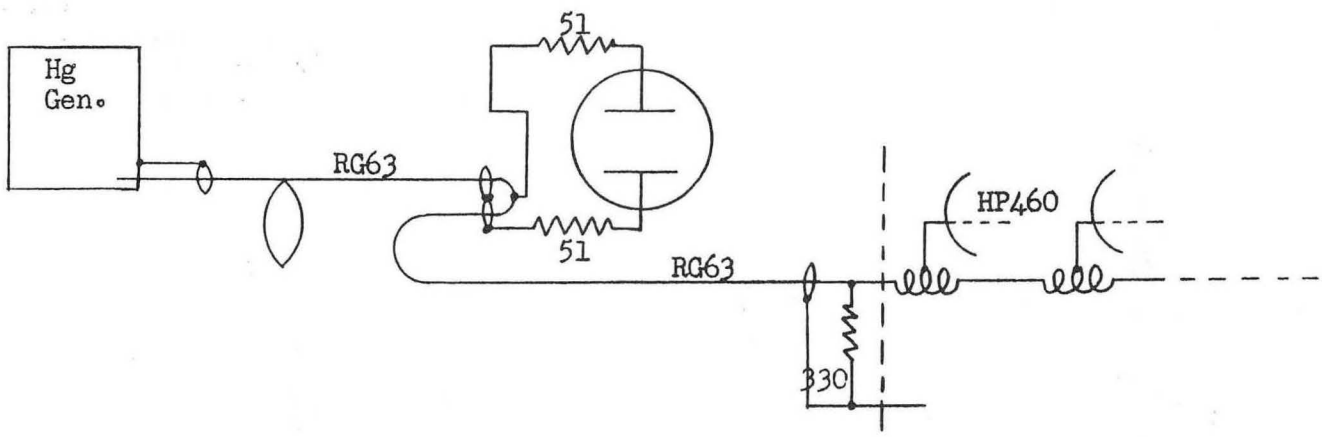

Fig. 7 Test Arrangement-HP460 Input Reflections

It should be noted that the impedance match shown is in one direction only, with the result that the observed reflection will be about 1/3 low and will contain small components from triple and higher order reflections.

A series of photographs is shown in Fig. 9. At each signal level the amplifier under test is first switched off and then switched on to show the contribution of the tube. A change is apparent on positive pulses due to shorting at the grids.

Fig. 10, 11 and 12 are photographs of output pulses for both units under various overload conditions. In all cases the plate line was fed directly into RG63 which was terminated in 125 ohms at the 5XP terminals in the scope. The input arrangement is shown below in Fig. 8.

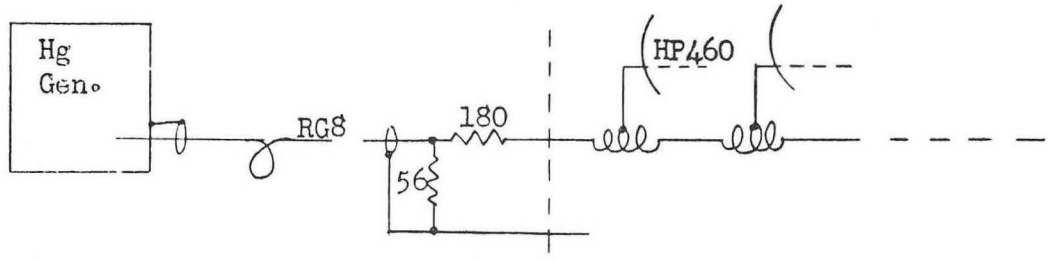

Fig. 8 Input pad for Figs. 10, 11, 12.

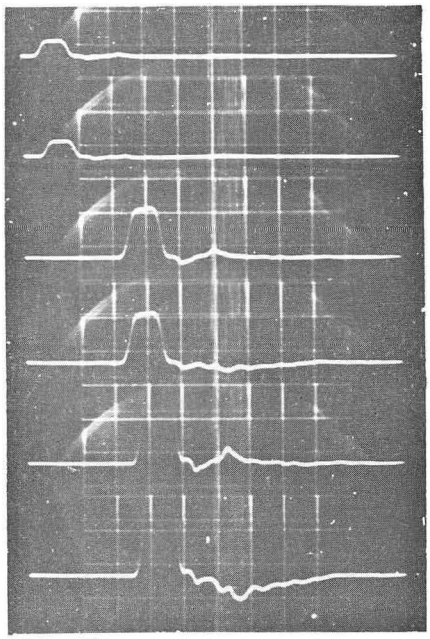

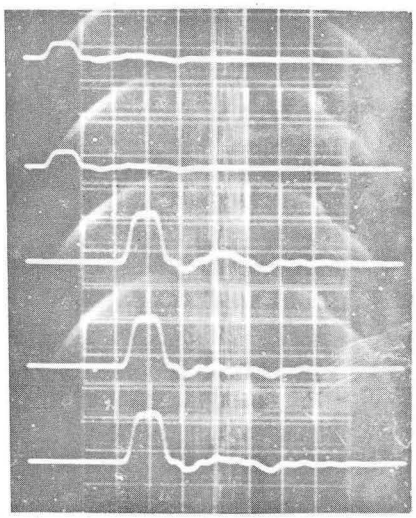

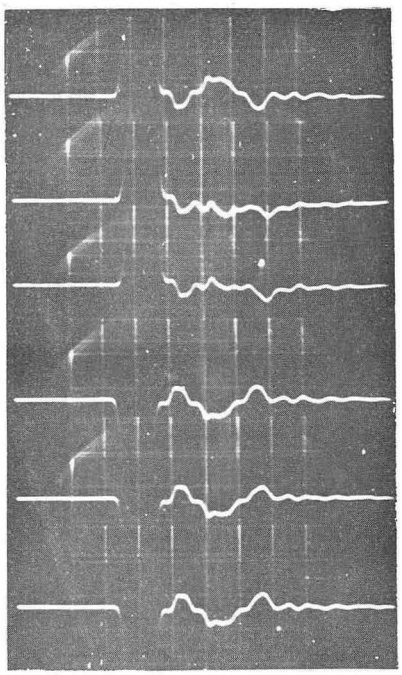

Pulse In	Amplifier Setting
+8v.	460A - Sw. off
+8v.	460A - On
+24v.	460A - Off
+24v.	460A - On
+54v.	460A - Off
+54v.	460A - On
+8v.	460B - Off
+8v.	460B - On-Linear
+24v.	460B - Off
+24v.	460B - On-Linear
+24v.	460B - On-Pulse
+54v.	460B - Off
+54v.	460B - On-Linear
+54v.	460B - On-Pulse
-54v.	460B - Off
-54v.	460B - On-Linear
-54v.	460B - On-Pulse

Sweep=5 x 10^{-9} sec/cm.
Sens.=18v/cm.

Fig. 9 Input Reflections HP460's

Signal in

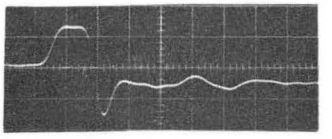

-1v.

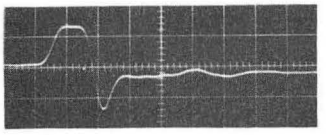

-2v.

-4v.

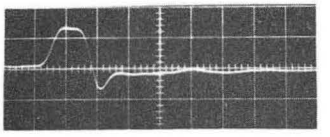

-8v.

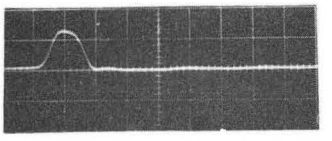

-16v.

+1v.

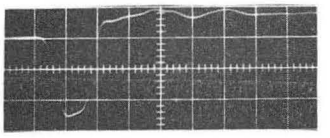

+2v.

+4v.

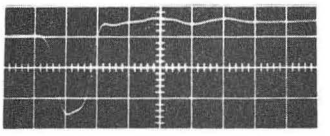

+8v.

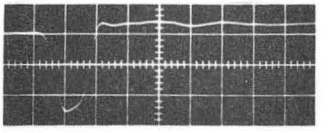

+16v.

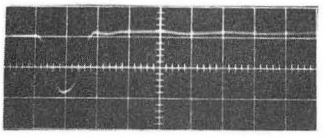

+16v., except with H.P. ADAPTER which is a mismatch at input looking toward generator

Fig. 10 HP460A - Output Pulses on Overload
Sweep = 5×10^{-9} sec/cm.
Sens. = 18 v/cm.

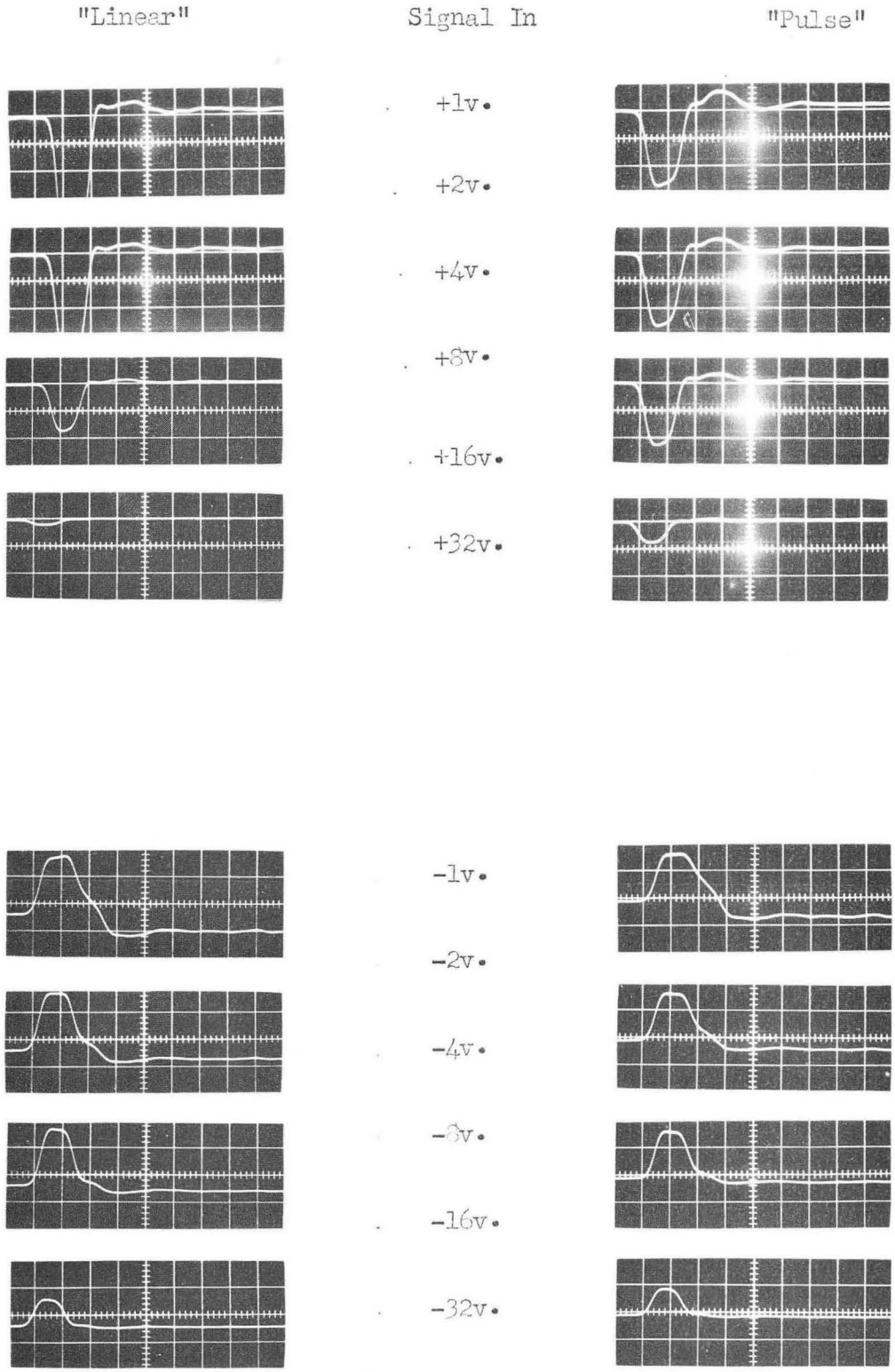

Fig. 11 HP460B - Output Pulses on Overload
Sweep = 10^{-8} sec/cm.
Sens. = 36 v./cm.

Input

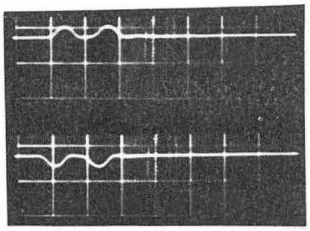

+5v.

-5v.

460A Output

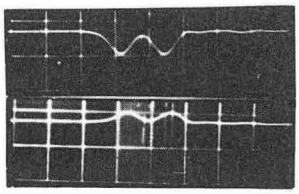

-2.2v. in

+1.0v. in

460A Output

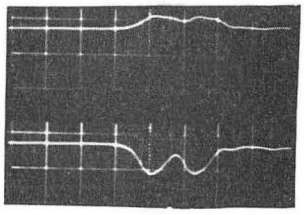

+5v. in

-5v. in

460B "Linear" Output

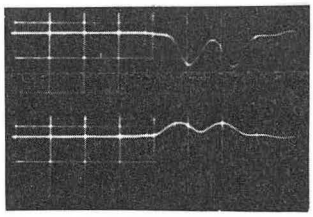

+6v. in

-6v. in

460B "Linear" Output

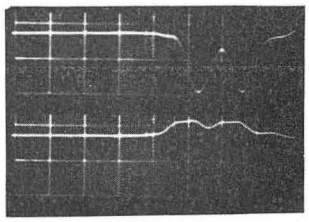

+12v. in

-12v. in

460B "Pulse" Output

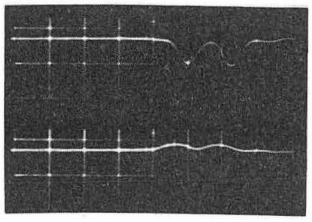

+6v. in

-6v. in

460B "Pulse" Output

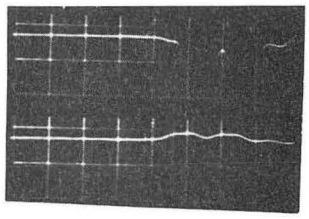

+12v. in

-12v. in

Fig. 12 HP460A and 460B - Resolution of Double Pulses on Overload
Sweep = 5×10^{-9} sec/cm.
Sens. = 18 v/cm.

As shown in Figs. 10 and 11 there are peaks occurring after the pulse. In addition, if there is an input mismatch the pulse may be lengthened due to reflections in the grid line. This is illustrated in the bottom trace of Fig. 10.

In Fig. 12 two pulses of duration 2×10^{-9} sec and separated by 7×10^{-9} sec. were fed in to show the deterioration of resolution time as the amplitude is increased. In all cases both amplifiers are capable of handling larger pulses in the negative direction at the output.

Manufacturers ratings for the time delays in the HP460A and 460B are 12 and 14 $\times 10^{-9}$ sec. respectively. These are apparently in error, for repeated measurements on units stocked at UCRL indicate time delays of 18 and 21 $\times 10^{-9}$ sec.

The specifications of various distributed amplifiers available, including the 460A and 460B, are given in Table I on page 11.

CONCLUSION: The HP 460A may be used effectively as a preamplifier after a photomultiplier in the experimental area, as a line amplifier, or as a driver amplifier leading into oscilloscopes, scalers, discriminators, etc. provided proper attention is given to rise time restriction, dynamic range, and load termination. The 460B, with less gain, is probably most effective when used as the last amplifier in the chain where large output swing may be needed. In particular reference to terminations, it is important to provide a close impedance match at the output terminals of either amplifier if there is a subsequent mismatch at the end of the cable leading away from the output terminals. This may be relaxed if the mismatch at the output terminals is the only mismatch in the output link, i.e., if the cable is matched at the far end. Individual gains should be determined frequently if accuracy here is required. These units do <u>not</u> have any gain stabilization.

When the amplifiers are expected to limit care should be exercised to see that input amplitudes are not so large as to produce extra pulses or to lose resolution on peaks.

REFERENCES:

1. Ginzton, Hewlett, Jasberg, and Noe
   Distributed Amplification
   Proc. I.R.E. 1948 <u>36</u>, 956-969 (Original paper).

2. Lewis and Wells
   Millimocrosecond Techniques
   McGraw-Hill Co. 1954 (Contains short discussion and most references through 1952).

3. Talkin and Cuneo
   Optimum Tube Utilization in Cascaded Distributed Amplifiers
   Proc. I.R.E. 1955 <u>43</u>, 1668-1669 (Extension of Ref. 1 to include bandwidth considerations).

File No. CC 1-6 (1)
January 14, 1964
H. G. Jackson

Lawrence Radiation Laboratory, University of California, Berkeley

COUNTING NOTE

LOGIC AMPLIFIER 20 V OUTPUT - 11X2421 P-1

I. SUMMARY

This unit is intended to raise a standard +4 V logic level[1] signal to +20 V for gating purposes. The circuit is basically a current switch followed by a parallel NPN-PNP emitter-follower.

The unit is packaged in a shielded nanobox. A size 3X box (2-1/4 x 5-1/4" panel) is used.

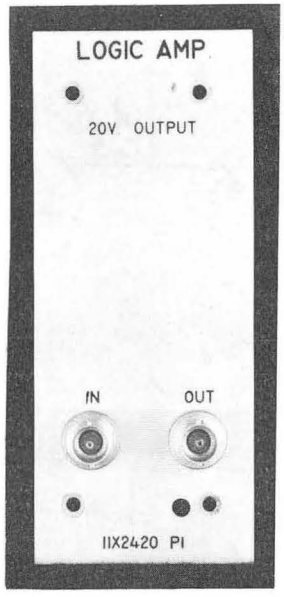

Fig. 1 - Logic Amplifier -- Front View

II. SPECIFICATIONS

Input

Impedance	1 K Ω
"1" Level	+4 V
"0" Level	-1 V

Output

Impedance	< 50 Ω (40 mA max.)
"1"	+ 20 V
"0"	-1 V
Delay	< 15 ns
Rise-time	< 45 ns (step input)

Power Required

+24 V	35 mA (75 mA max.)	pin 12.
-12 V	25 mA	pin 21.
Ground		pin 1.

[1] See CC 5-9 for logic voltage levels.

HGJ:mt

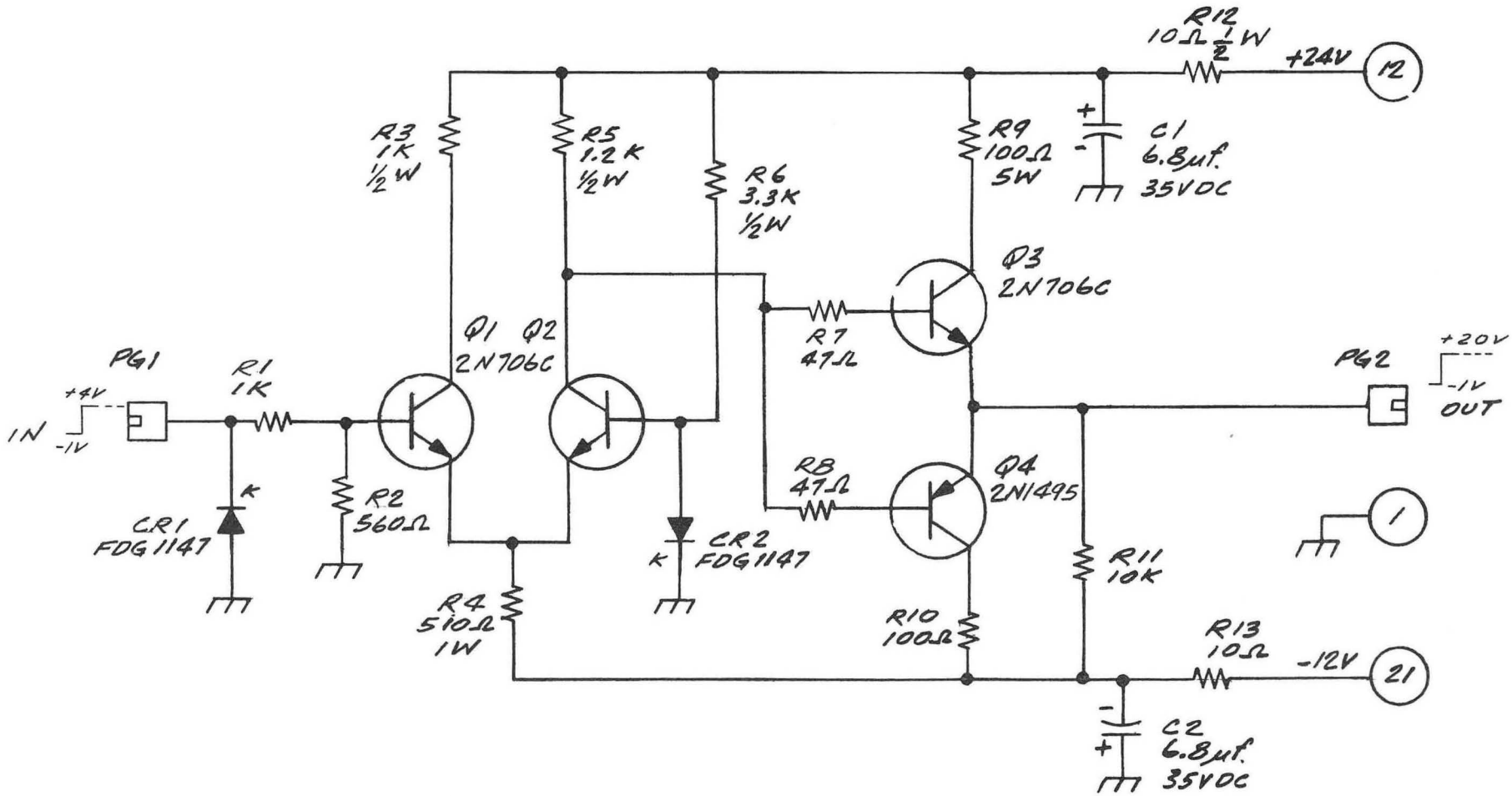

Logic Amplifier 20 V Output Schematic

File No. CC 1-7 (1)
E. W. Pullen
February 6, 1964

Lawrence Radiation Laboratory, University of California, Berkeley

COUNTING NOTE

PULSE AMPLIFIER - 11X2551 P-1*

I. SUMMARY

This transistorized unit is designed for fast pulse amplification; it has a maximum gain of ten with a rise time of two nanoseconds. Direct coupling from input to output and a dc stabilization circuit to compensate for output level changes make this unit especially useful when amplifying high duty factor signals. The amplifier maintains good output limiting characteristics for signals up to 10 times overload. The amplifier and a view of its internal construction is shown in Fig. 1. Up to four units can be plugged into a standard nanobox bin (panel size 5-1/2" x 3-3/4").

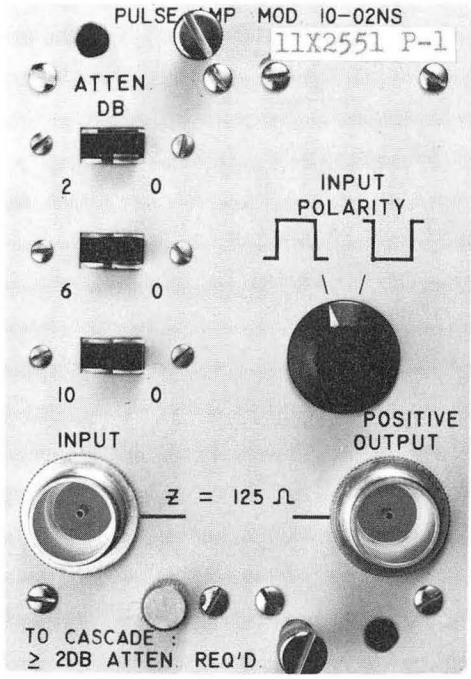

Fig. 1 - Front Panel View of Amplifier

*Designed by H. Verweij, CERN, Geneva 23, Switzerland

II. SPECIFICATIONS

A. Input.

1. Positive or negative input pulses - ± 0.5 V for linear operation. Maximum input amplitude ± 5.0 V.
2. Input impedance - 125 ohm.
3. Pulse polarity selected by a front panel control.

B. Output.

1. Positive pulses only. Maximum output + 5.0 V into 125 ohm load. Overshoot is adjusted to less than 5% on both leading and trailing edges. A typical output waveform is shown in Fig. 2.

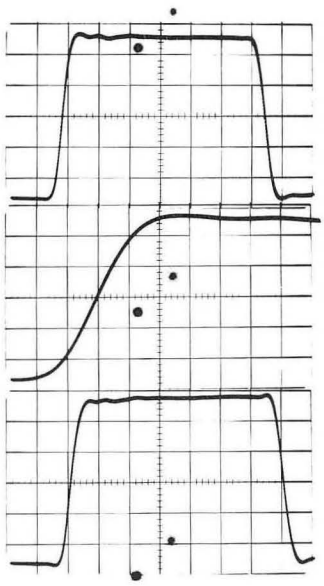

a) Positive Input:
Vert. - 200 mV/cm
Hor. - 5 ns/cm

b) Positive Input:
Vert. - 200 mV/cm
Hor. - 1 ns/cm

c) Negative Input:
Vert. - 200 mV/cm
Hor. - 5 ns/cm

Fig. 2 - Output Waveforms

C. Gain.

1. Maximum gain: 10. Slide switch attenuators insert loss in the input giving the discrete gains shown in Table 1.

GAIN	SWITCH		
	2 db	6 db	10 db
10			
8	X		
5		X	
4	X	X	
3			X
2.5	X		X
1.6		X	X
1.25	X	X	X

TABLE I - Gain per Attenuator Switch Positions

D. Response Time.

1. Due to component variation between units, output rise time varies between 2.0 ns and 2.4 ns into a 125-ohm load.

E. Overload Characteristics.

1. The amplifier is capable of ten times overload in either polarity without damage or excessive pulse distortion.

F. Noise.

1. The noise level, referred to the input, ranges from 100 μV to 120 μV with the output terminated into 125-ohm.

G. Power Requirements.

1. +24 Volts @ 80 mA - pin 12.
2. -24 Volts @ 80 mA - pin 22.

III. CIRCUIT DESCRIPTION

Positive inputs are fed through an emitter follower (Q-11) to the first amplifying stage (Q-2). A double cascode amplifying stage (Q-6 - Q-9) is then used to provide the necessary current to drive 5 volts across 125-ohms and to reduce the effects of output amplitude upon response time.

The front-panel selector switch routes negative pulses to an inverting stage (Q-1).

Feedback of the dc output level is used to control the bias current in the first stage and compensate for any long-term drifts or duty-factor shifts within the amplifying path. The dc stabilization is achieved by feeding back any negative change in output level through the diode CR-13 to a differential amplifier (Q-4 and Q-5). This dc amplifier operating through Q-3 controls the bias current of Q-2. A block diagram of the amplifier is shown in Fig. 3 and the schematic diagram in Fig. 9.

Broadbanding is achieved with the use of local emitter series feedback.

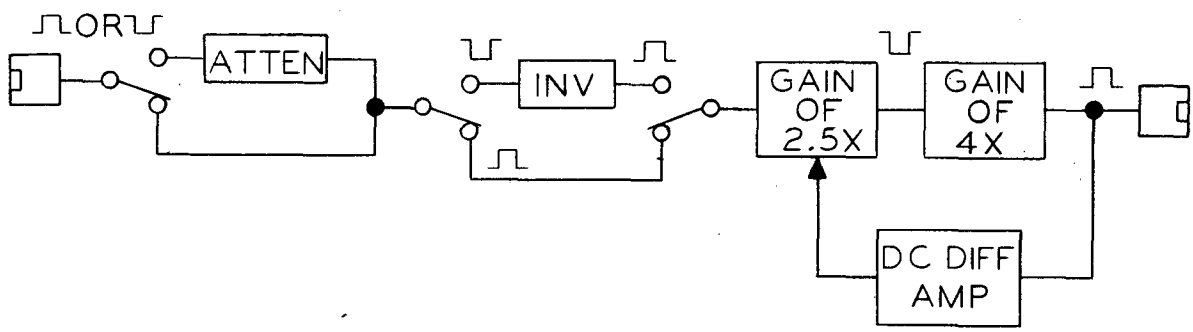

Fig. 3 - Amplifier Block Diagram

IV. PERFORMANCE

A. Rise Time.

1. A variation of the output rise time occurs as a function of output amplitude. This variation is plotted in Fig. 4.

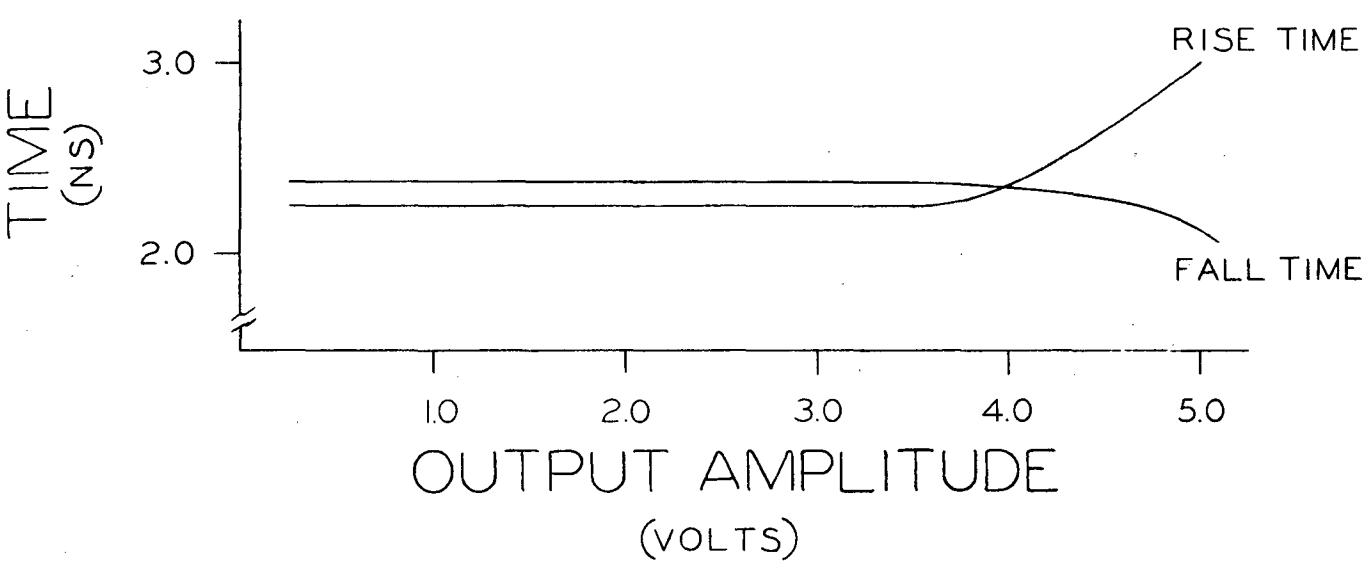

Fig. 4 - Variation of Rise Time With Output Level

B. Overload.

1. The output waveforms for various conditions of overload are shown in Fig. 5. A pulse width increase of - 2 ns occurs for a ten times positive overload, and - 8 ns for a ten times negative overload.

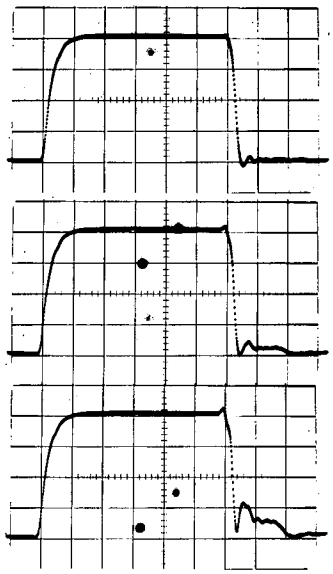

a) 2 X Overload.

b) 5 X Overload.

c) 10 X Overload.

Fig. 5 - Output Under Overload
(Vert. 2 V/cm; Hor. 10 ns/cm)

C. Cascade Operation.

1. Matching difficulties arise when connecting the output of one amplifier to the input of another in a cascaded operation. Ringing occurs along the top of the pulse, but this can be effectively reduced by switching in attenuation at least 2 db in the second amplifier. Fig. 6 shows output waveform of the second amplifier.

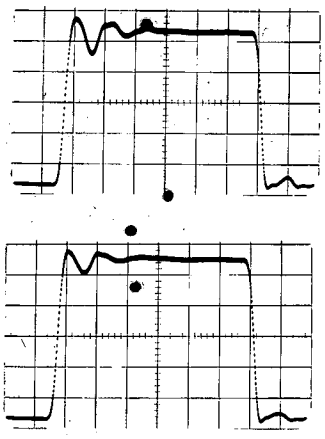

a) Gain of 40 db (100 X)

b) Gain of 38 db (79 X)

Fig. 6 - Cascaded Output
(Vert. 200 mV/cm; Hor. 10 ns/cm)

D. Duty Factor.

1. Fig. 7 shows the output for a burst of pulses at 20 MC pulse rate. The burst length is 100 ms and burst rate is 50 cps.

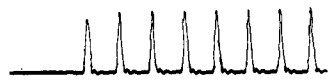

a) Vert. 1 V/cm; Hor. 50 ns/cm.

b) Vert. 1V/cm; Hor. 20 μs/cm

Fig. 7 - Output for a Burst Input

E. Pulse Width.

1. The output waveform for very long pulses experiences a droop due to the feedback effects of the dc stabilization circuit. Fig. 8 shows this droop for a 15 μs input pulse.

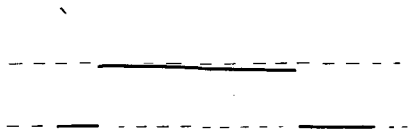

Fig. 8 - Long Pulse Output
(Vert. 1 V/cm; Hor. 2 μs/cm)

REFERENCES

1. H. Verweij, "A Nanosecond Pulse Amplifier", Nuclear Instruments and Methods, Vol. 24 #1, p. 39 (July 1963)

2. UCLRL Drawing No. 11X2553 S-1.

EWP:mt

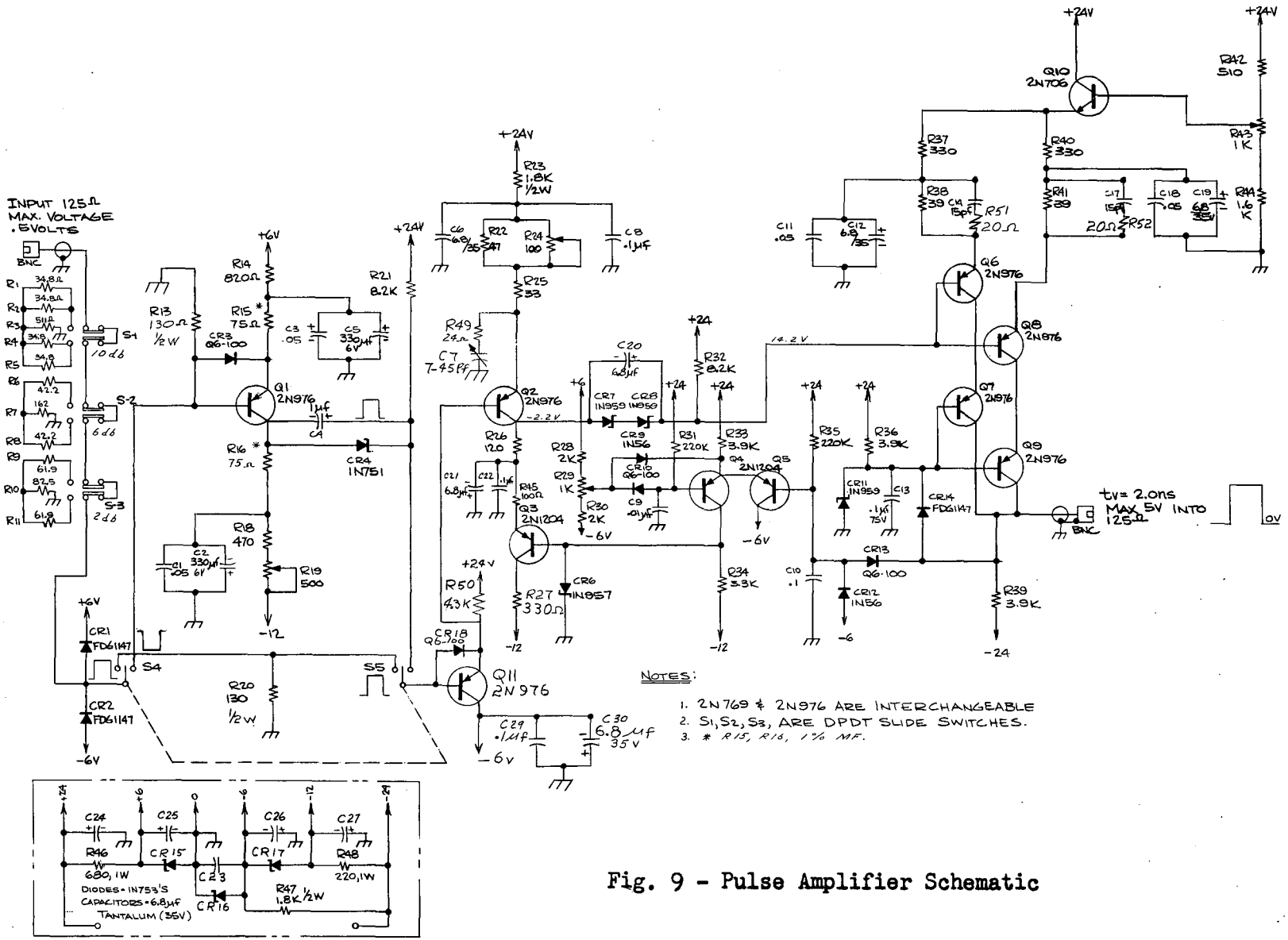

NOTES:

1. 2N769 & 2N976 ARE INTERCHANGEABLE
2. S1, S2, S3, ARE DPDT SLIDE SWITCHES.
3. * R15, R16, 1% MF.

Fig. 9 - Pulse Amplifier Schematic

File No. CC 1-8 (1)
February 15, 1966
H. G. Jackson

Lawrence Radiation Laboratory, University of California, Berkeley

COUNTING NOTE

DUAL 1 NS-D.C. X10 AMPLIFIER - 18X1281 P-2

I. SUMMARY

Two separate dc coupled amplifiers, each with a gain of 10 and a risetime of 1 nsec have been packaged in a Nuclear Instrument Module. A Size 1X (1.35 x 8.75" panel) is used.

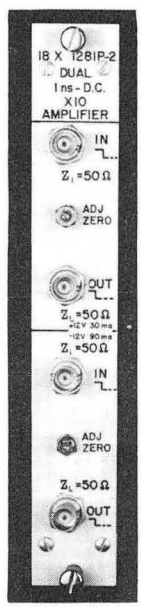

Fig. 1 - Front Panel View of Amplifier

II. SPECIFICATIONS

Gain	10
Risetime	1 nsec
Input impedance	50 ohms
Input polarity	Negative
Output polarity	Negative
Maximum output amplitude	1 V in 50 ohms
Delay, input to output	3 nsec
Equivalent noise level at input	50 μV rms
Thermal drift of output level	1 mV/°C

Power Required

+12 V 30mA	pin 16.
-12 V 90mA	pin 17.
Ground	pin 34.

III. CIRCUIT DESCRIPTION

A schematic diagram is shown in Fig. 2. Two transistors are used in a feedback configuration to give a typical closed-loop gain of 11. The open loop gain is about 66.

The trimmer capacitor (C-3) provides high-frequency compensation. The potentiometer (R-6) is a front panel control used to adjust the output level to 0 V.

With the negative input signals the current in Q-1 decreases and that in Q-2 increases. The 1N753A (CR-3) is quiescently conducting 20mA, which decreases as the current in Q-2 increases. With zero current in CR-3, its impedance is very large, thereby substantially reducing the gain of Q-2. In this way the amplifier output current is limited to about 20mA or 1 V into a 50-ohm load. In practice the saturated output is about 1.5 V.

Inclusion of CR-1 is an attempt to perform some temperature compensation for the base-emitter junction of Q-1. Its effect is to hold the output dc level change with temperature to less than 1 mV/°C. Typically, over the temperature range 20 to 75°C, the output level changes less than 25 mV.

IV. PERFORMANCE

A Hewlett-Packard 215A pulse generator and a Tektronix 661 sampling oscilloscope were used to obtain the performance characteristics of the amplifier. The rise and fall time of the amplifier output are shown in Fig. 3. Figure 4 shows the amplifier output as the input voltage is changed from 10 mV to 100 mV, then to 1.0 V. The overshoot on the saturated output pulse is due to discharge of the capacitance of the zener diode (CR-3). A plot of the rise and fall times with output amplitude is shown in Fig. 5. The rise and fall times are both about 1 nsec up to an output amplitude of 1.0 V. A gain linearity curve is shown in Fig. 6. At the 1.0 V output amplitude, departure from linearity is less than 10%.

The noise level was measured with a Boonton Model-91B RF voltmeter, which has a bandwidth of 50 KHz to 500 MHz. The equivalent noise level at the input was typically about 40 μV.

REFERENCES

1. A 1-nsec RISETIME AMPLIFIER WITH DIRECT COUPLING, H. G. Jackson, UCRL-11819, November 25, 1964, also Nucl. Instr. and Meth., 33 (1965) 161.

HGJ/mlr

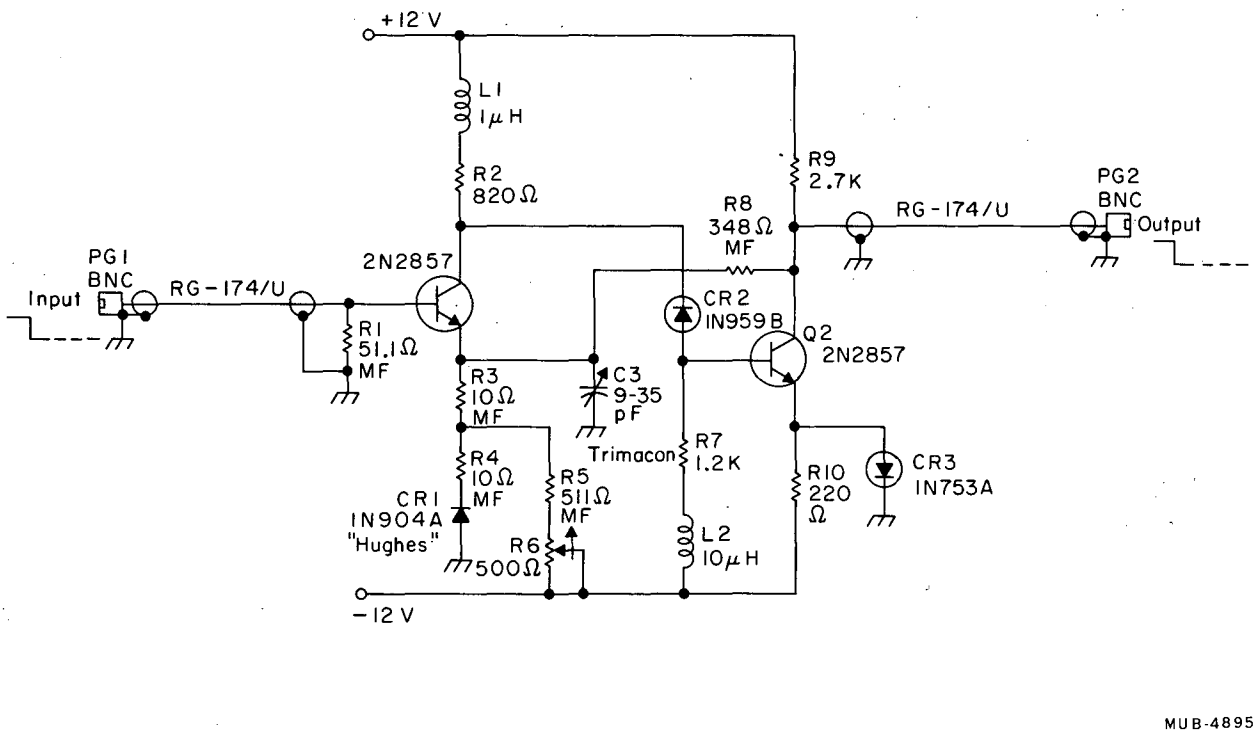

Fig. 2 - Schematic of the Amplifier

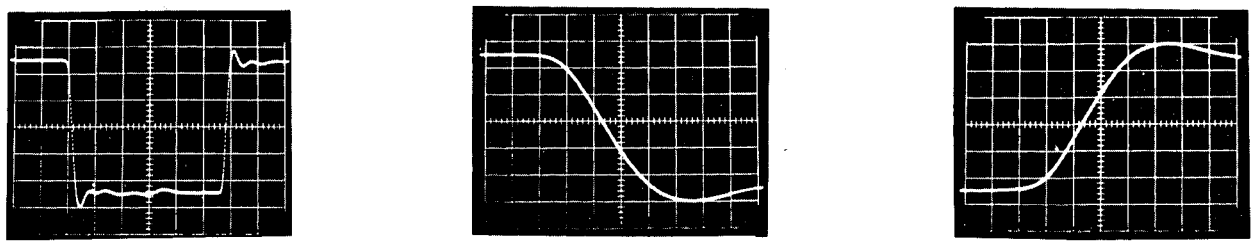

(a) (b) (c)

Fig. 2. Rise and fall time of the amplifier output.
(a) Output pulse - horizontal sweep = 5 nsec/cm; vertical = 50 mV/cm.
(b) Rise time - horizontal sweep = 0.5 nsec/cm; vertical = 50 mV/cm.
(c) Fall time - houizontal sweep = 0.5 nsec/cm; vertical = 50 mV/cm.

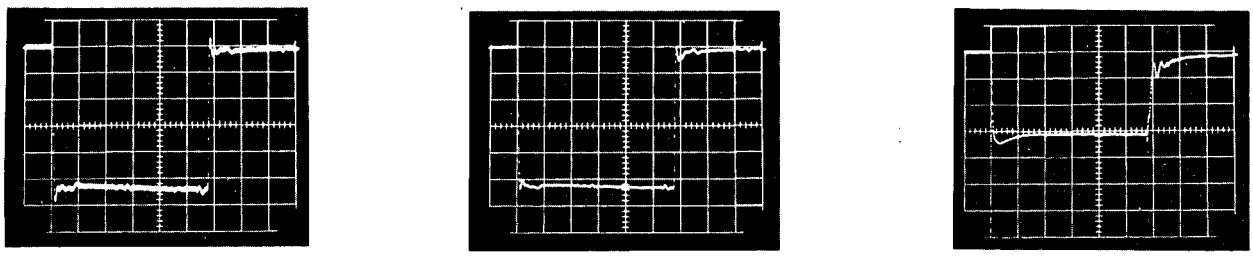

(a) (b) (c)

Fig. 3. Amplifier outputs
(a) Input voltage = 10 mV; horizontal sweep = 20 nsec/cm; vertical = 20 mV/cm.
(b) Input voltage = 100 mV; horizontal sweep = 20 nsec/cm; vertical = 200 mV/cm.
(c) Input voltage = 1.0 V; horizontal sweep = 20 nsec/cm; vertical = 500 mV/cm.

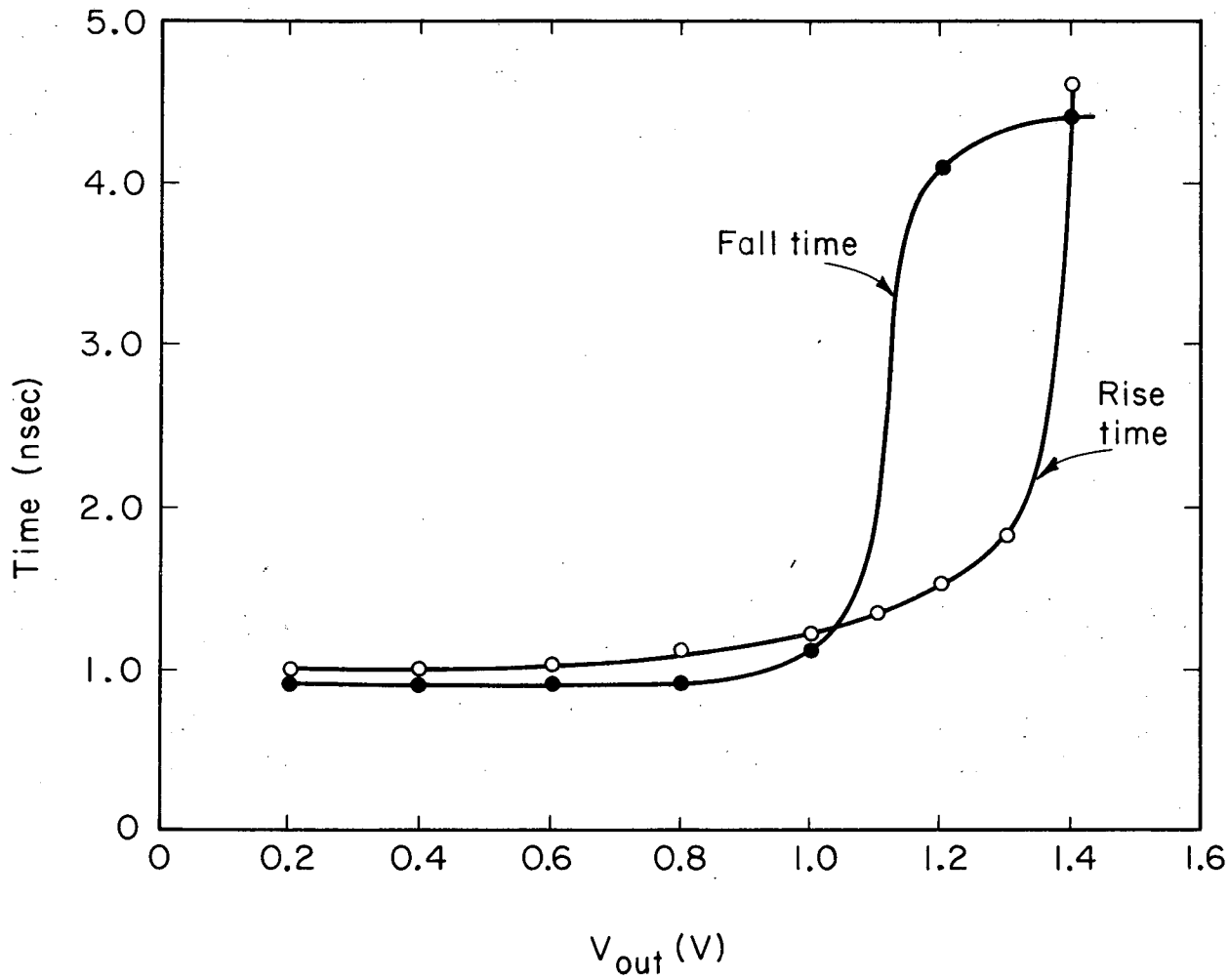

MUB-4894

Fig. 5 - Rise and Fall Time vs Output Voltage

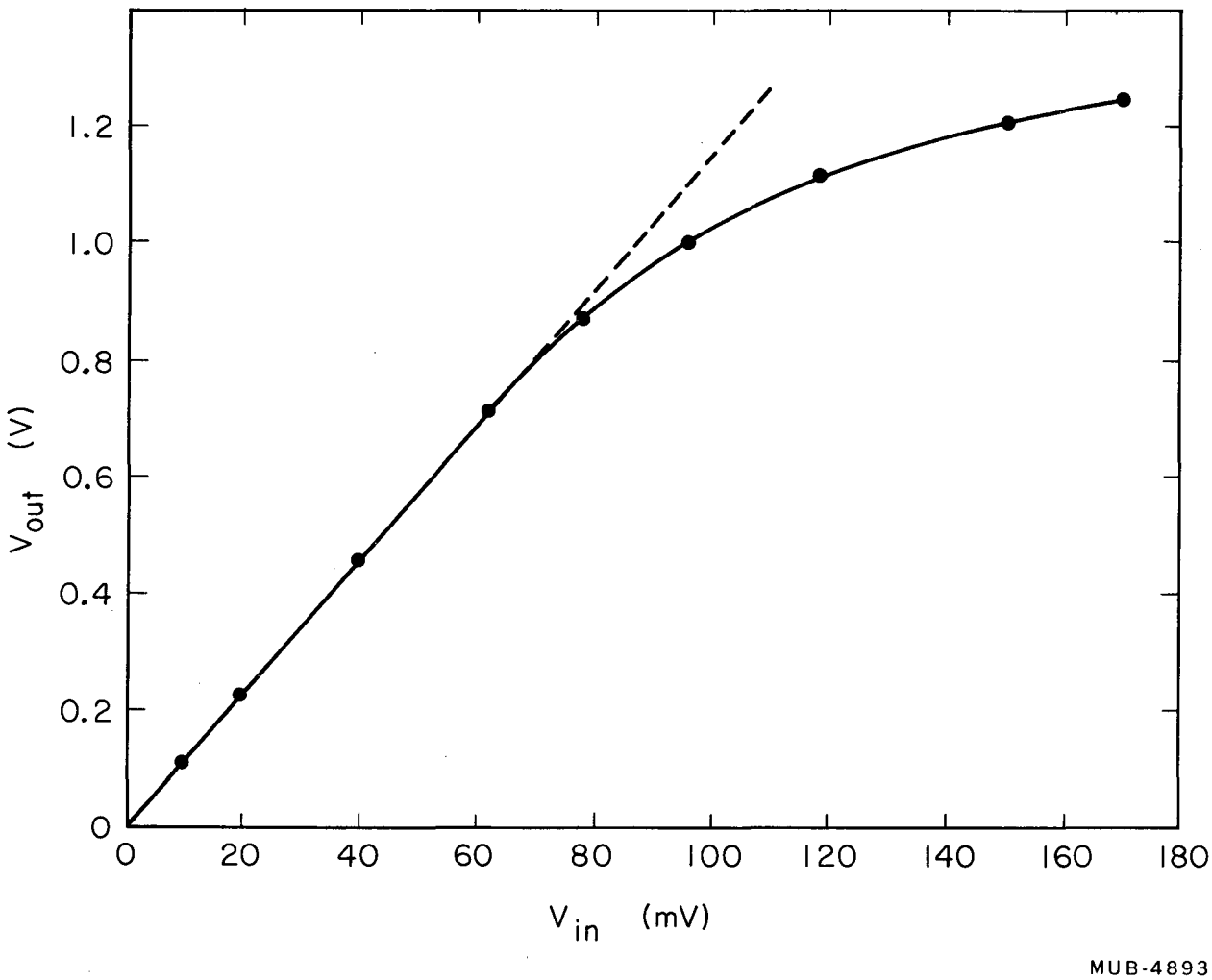

Fig. 6 - Gain Linearity Curve

File No. CC 2-1B (1)
Q. Kerns; F. Kirsten;
C. Winningstad
Rev. July 29, 1966
F. Kirsten and R. Wallace

Lawrence Radiation Laboratory, University of California, Berkeley

COUNTING NOTE

PULSE RESPONSE OF COAXIAL CABLES

I. ABSTRACT

For most cables useful in counting work, attenuation below approximately 1000 mc is due mainly to skin-effect losses and varies as the square root of frequency. For such cables the step-function response has a rise time that varies as the square of the attenuation at a given frequency. Curves are given to aid in the selection of cables for transmitting nanosecond pulses.

II. STEP FUNCTION RESPONSE

Mathematically ideal, lossless coaxial cables can be shown to transmit electrical pulses in the TEM mode without attenuation or distortion. However, all physically realizable cables have losses, the magnitude of which changes with frequency. Pulses transmitted through such cables suffer both attenuation and distortion. By means of the Laplace transform, the nature of the distortion can be calculated if the attenuation and phase-shift are known at all frequencies. In most of the cables presently useful in counting work, skin effect losses in the conductors are the predominate losses below about 1000 mc. Skin-effect losses produce an attenuation whose magnitude in decibels varies as the square-root of frequency. This results in a step function response of:

$$E_{out} = E_{in} \left(1 - \mathrm{erf} \frac{b\,\ell}{\sqrt{2\,(t-\tau)}}\right)$$

where

E_{out} = voltage at distance ℓ from input end of semi-infinitely long uniform cable,[1] at time t (seconds).

E_{in} = amplitude of step of voltage applied to input of cable at time t = 0.

ℓ = distance from input end in feet.

b = constant for the particular cable in question.
$= 1.45 \times 10^{-8}$ A - feet^{-1} sec$^{\frac{1}{2}}$

A = attenuation of cable at 1000 mc - db/100 feet (attenuation figures for coaxial cables are commonly quoted in these units).

erf = error function[2]

τ = transit time of cable defined as the value of t at which the voltage at ℓ first begins to change (considering only the step function occurring at t = 0, of course).

(1) With negligible error in most cases E_{out} can be taken as the response at the receiving end of a cable of length ℓ, terminated in a resistor equal to its characteristic impedance.

(2) As defined in Reference 1, p 256.

Fig. 1 may clarify the nomenclature involved in this relation.

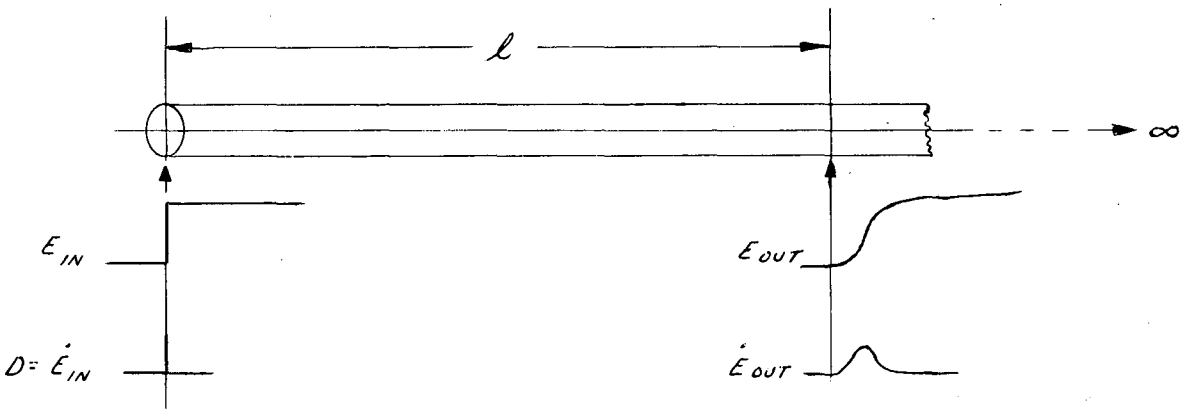

Fig. 1 - This illustrates the space relation between E_{in} and E_{out}.

A normalized curve of E_{out}/E_{in} is shown in Fig. 2. The abscissa is plotted in units of T_o, the 0-50% rise time. In other words, T_o is the value of $(t - \tau)$ at which $E_{out}/E_{in} = 1/2$. For cables whose attenuation varies as the one-half power of frequency, it is convenient to calculate T_o as:

$$T_o = 4.56 \times 10^{-16} A^2 \ell^2 \text{ seconds } \left(= \left[\frac{b\ell}{0.6745}\right]^2\right).$$

It is evident that T_o varies directly as the square of the total attenuation of the length of cables. Cables of different sizes or types may therefore be compared for rise time in terms of A, their attenuation at 1000 mc. Figures of A for most commercially available cables are given in CC 2-2.

In cases where: a) the attenuation is known only at a frequency other than 1000 mc; or b) the frequency dependence of attenuation departs somewhat from the 1/2 power law (say, where α = constant $\cdot f^n$, in the region $0.4 < n < 0.7$) T_o may be calculated:

$$T_o = \frac{4.56 \times 10^{-7} \alpha_f^2 \ell^2}{f}$$

where

α_f = attenuation of cable at frequency f - db/100 feet.

f = frequency - cycles.

In case a) the nomogram of Sec. VII CC 2-2 may be useful. In case b), it has been empirically determined that reasonably accurate results are obtained where f is the frequency at which the total attenuation (i.e., $\alpha_f \ \ell/100$) of the cable is 6 decibels. Substituting $\alpha_f \ \ell/100 = 6$ db into the above gives the useful relation

$$T_o \cong 1/6f_6$$

where

f_6 = frequency at which the total attenuation of the length of cable in question is 6 db.

The times to reach other precentages of the input step amplitude are given in Table I.

TABLE I

RISE TIME CONVERSION FACTORS

X	0 to X % rise time / T_o
10	0.17
20	0.28
50	1.0
70	3.1
80	7.3
90	29.
95	110.
The 10 to 90% rise time is thus (29 - 0.17) T_o = 28.83 T_o.	

III. IMPULSE RESPONSE

The response to an impulse (delta function), of a cable having decibel attenuation proportional to the square-root of frequency, may be obtained by differentiating E_{out} above. As with the step-function response, the impulse response can be represented by a universal curve, that of Fig. 3. The area under this curve (coulombs) is conserved as the pulse travels along the cable. Thus, the peak amplitude of the response varies as

$$\frac{1}{b^2 \ell^2} \ \alpha \ \frac{1}{A^2 \ell^2}$$

and the time between, for example, the half-amplitude points, varies as $b^2 \ell^2$. The peak amplitude occurs at 0.152 T_o.

IV. RESPONSE TO OTHER PULSE SHAPES

It will be noted that, since the rise time T_o is proportional to ℓ^2, if two equal lengths of a given type of cable are cascaded, the rise time of the combination is four times the rise time of either length alone. This is in contrast to the well-known case of amplifiers of "Gaussian" frequency response, in which the rise time varies as the square root of the number of identical sections. For this reason, and also because the characteristic step-or impulse-function responses of cables and of "Gaussian" amplifiers are so different, the rule-of-thumb that the over-all rise time = $\sqrt{\text{sum of squares of individual rise times}}$ is not applicable either with cables alone, or where cables are combined with Gaussian elements. Instead, the overall response of a system with cables and other elements may be obtained graphically or with the standard convolution integrals[3] using either the step-or impulse-function response of the cables.

V. RECTANGULAR PULSE RESPONSE, CLIPPING LINES

The response of a cable to a rectangular pulse of a duration T can be found by a simple application of superposition. The rectangular pulse is considered to consist of a positive step-function at t = 0, followed by a negative step-function at t = T. The amplitude reduction of such a pulse as a function of the distance it has traveled along the selected coaxial cables is shown in Fig.s 5, 6 and 7. Fig. 5 includes a curve showing the time-stretching of the output pulse with respect to the input pulse. By suitably changing the length scale in the way indicated on the figure, the two curves of Fig. 5 can be applied to any pulse duration and any cable for which attenuation varies as the square root of frequency. The amount of time-stretching of any output pulse can therefore be determined from Fig. 5 by knowing the value E_{out}/E_{in} for the pulse, where E_{out} is the peak amplitude of the output pulse, and E_{in} is the amplitude of the input pulse.

The relative merits of various coaxial cables as conductors of pulses from multiplier phototubes or other current generators can be estimated from the curves of Fig. 6 which are replotted from Fig. 5. Use Fig. 6a for pulses of $T = 10^{-8}$ second; 6b for $T = 10^{-9}$; 6c for $T = 10^{-10}$. Note that the input is a rectangular current pulse of 1 ampere amplitude. At the input end of the cable, therefore, the voltage amplitude of the rectangular pulse is Z_o volts, where Z_o is the characteristic impedance of the line. The curves show, for example, that for an input current pulse of $T = 10^{-9}$ second, the peak voltage of the output pulse at the end of a 75 foot run of RG 114 would be the same as that at the output end of a 75 foot run of RG 63, even though the voltage developed at the input end of the RG 114 would be 185/125 times the voltage at the input of the RG63.

[3] Reference 1, pp 112-120

In Fig. 7 are shown some specific output pulse shapes together with the lengths of commonly used cables that give the corresponding output pulse shape for an input pulse of $T = 10^{-9}$ second. These pulse shapes were determined from Fig. 2 in the way mentioned above.

The curves of Fig.s 5, 6 and 7 also apply[4] to clipping lines if the input is a step-function and T = 2 times the electrical length of the clipping line. This is true whether the clipping line is located at the input or output end of the transmission line. The minimum 0-100% rise-time of a clipped pulse is 0.15 T_0. Clipping lines of electrical length less than 0.075 T_0 will not decrease the rise-time, but will only decrease the amplitude of the output pulse.

The curves and data are intended to present the properties of the coaxial cables, and therefore do not include the effect of quantities that depend on the way in which the cables are used. Examples of such quantities are the rise-time of multiplier phototube output pulses and imperfect cable terminations. The curves and data also do not take into account the inevitable small variations of characteristic impedance along the line. These impedance variations will generally degrade the rise-time of the output pulse by reflecting portions of the faster rising parts of the pulse being transmitted.

VI. EXPERIMENTAL VERIFICATION

Photographs of the responses of several cable types to step-function inputs are shown in Fig. 8. These photographs were all taken from displays on a DuMont K1056 cathode ray tube connected as shown in the block diagram of Fig. 8. Fig. 8a shows the step from the pulse generator delayed only by 25 nanoseconds of cable inserted at A-A in Fig. 9. The rise time of the pulse generator-oscilloscope combination is about 0.45 nanosecond, and therefore obscures the shape of the leading edge of the waveform of some of the better cables. The typical 1 - erf shape is plainly seen in Fig. 8f, for RG 63.

[4] Provided the clipping line is short enough that its attenuation may be neglected.

REFERENCES

1. S. Goldman, Transformation Calculus and Electrical Transients, (Prentice-Hall Publishing Co., New York, 1945)

2. P. Behrend, "Theory of Pulse Technique for Coaxial Cables", Z. Angew, physik 5, 61 (Feb. 1953)

3. Wingington and Nahman, "Transient Analysis of Coaxial Cables Considering Skin Effect", Proc. IRE 45, 166-174 (Feb. 1957)

4. Ramo and Whinnery, Fields and Waves in Modern Radio, (John Wiley and Sons, New York, 1953, Second Edition)

FK:mt

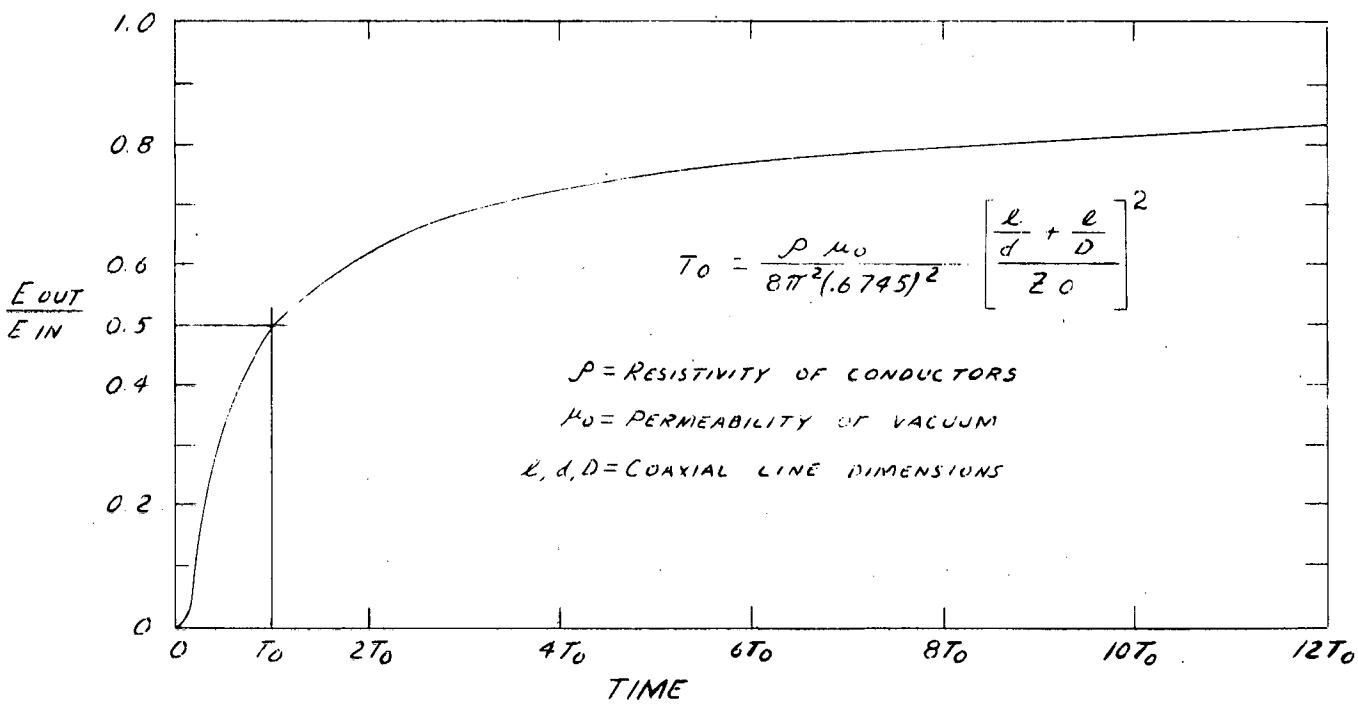

Fig. 2

Step-function response of transmission lines for which decibel attenuation varies as the square root of frequency. The time T_o is defined as the interval measured from the start of the output pulse to the point at which $E_{out} = 0.5\ E_{in}$. T_o depends on the transmission line parameters; the relation for coaxial structures with negligible dielectric loss is given in the figure. In Fig. 4, T_o is plotted as a function of cable type and length.

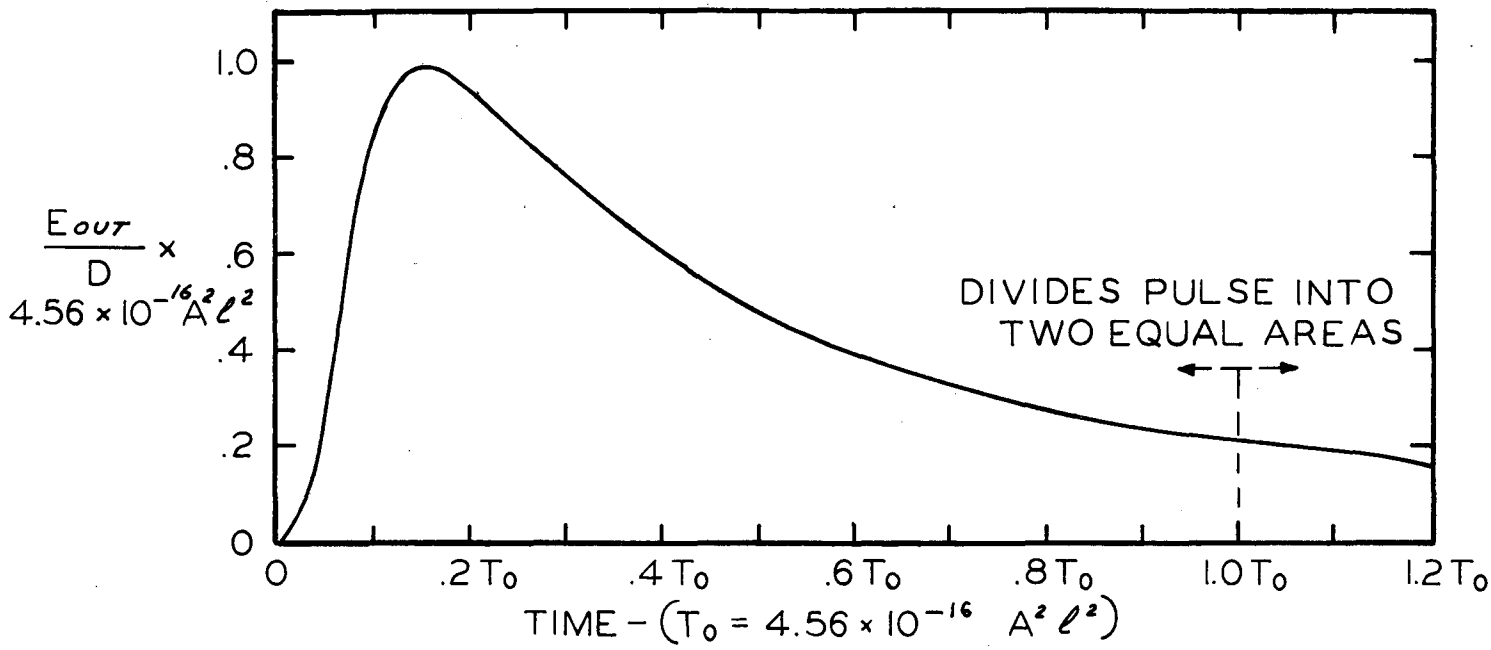

Fig. 3
Delta-function response of transmission lines for which attenuation varies as the square-root of frequency. As given in the text, A is the attenuation in db/100 feet at 1000 mc, ℓ is the cable length in feet, and D is the volt-second product of the input delta function. This curve is the time derivative of the curve of Fig. 2.

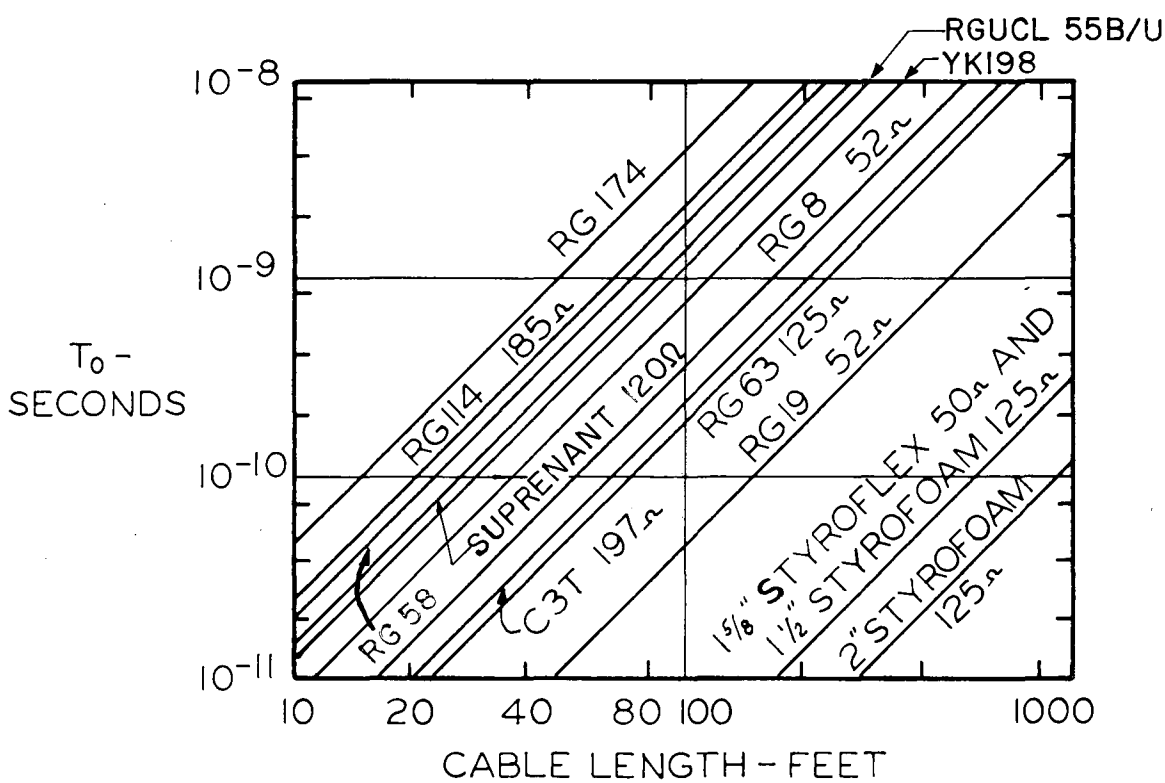

Fig. 4
Calculated variation of T_0 with cable length for typical coaxial cables. To obtain the values of T_0 for other cable types see CC 2-2B.

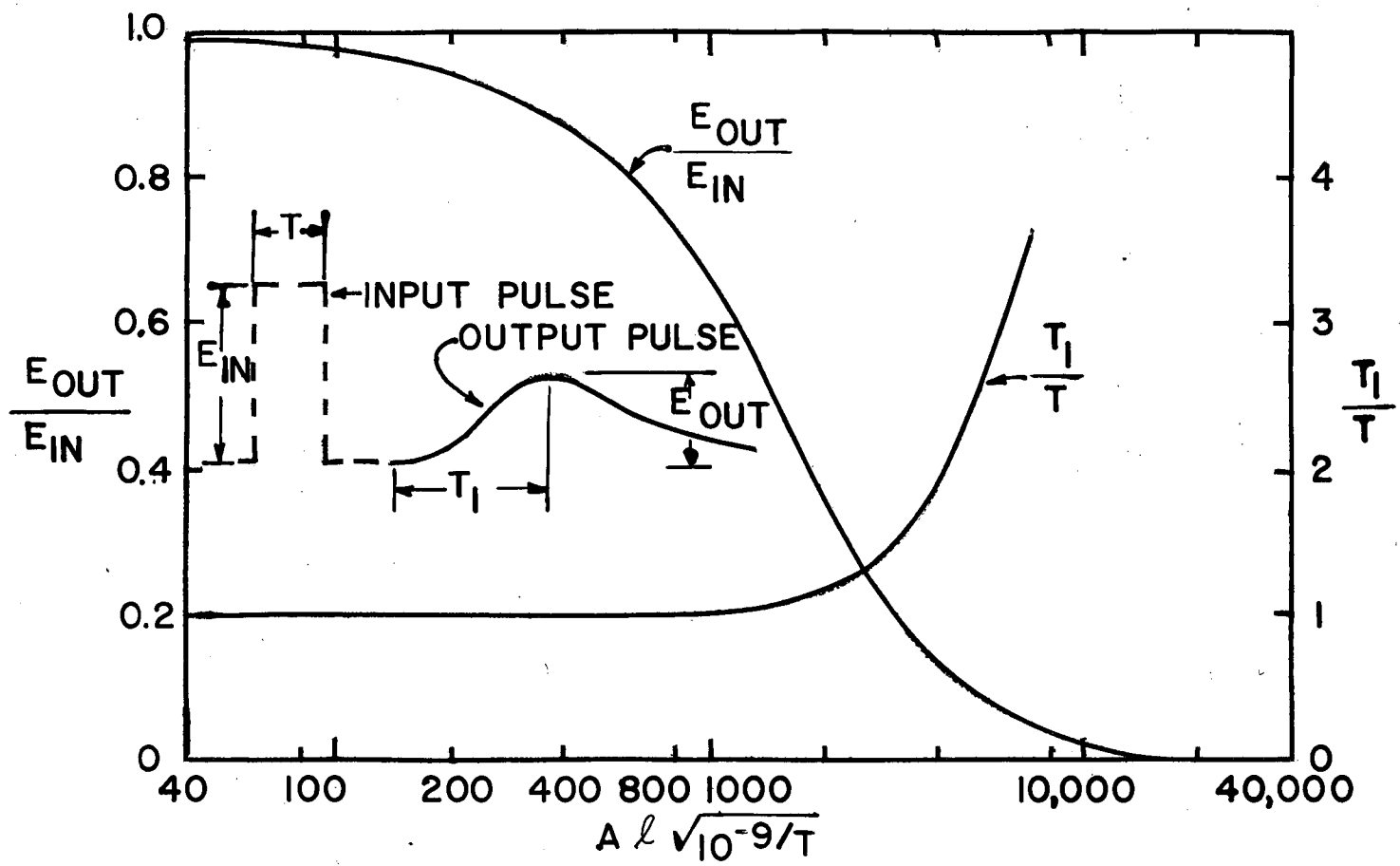

Fig. 5

The time-stretching and amplitude-reduction of an originally rectangular pulse plotted as a function of A, the attenuation of the cable at 1000 mc in db/100 ft.; ℓ, the length in feet; and T, the duration of the input pulse in seconds. Attenuation figures may be obtained from CC 2-2B. As an example, for RG63, A is 7 db/100 ft. Thus if T were 10^{-9} sec, and ℓ were 100 feet, the chart should be entered at an abcissa of 700.

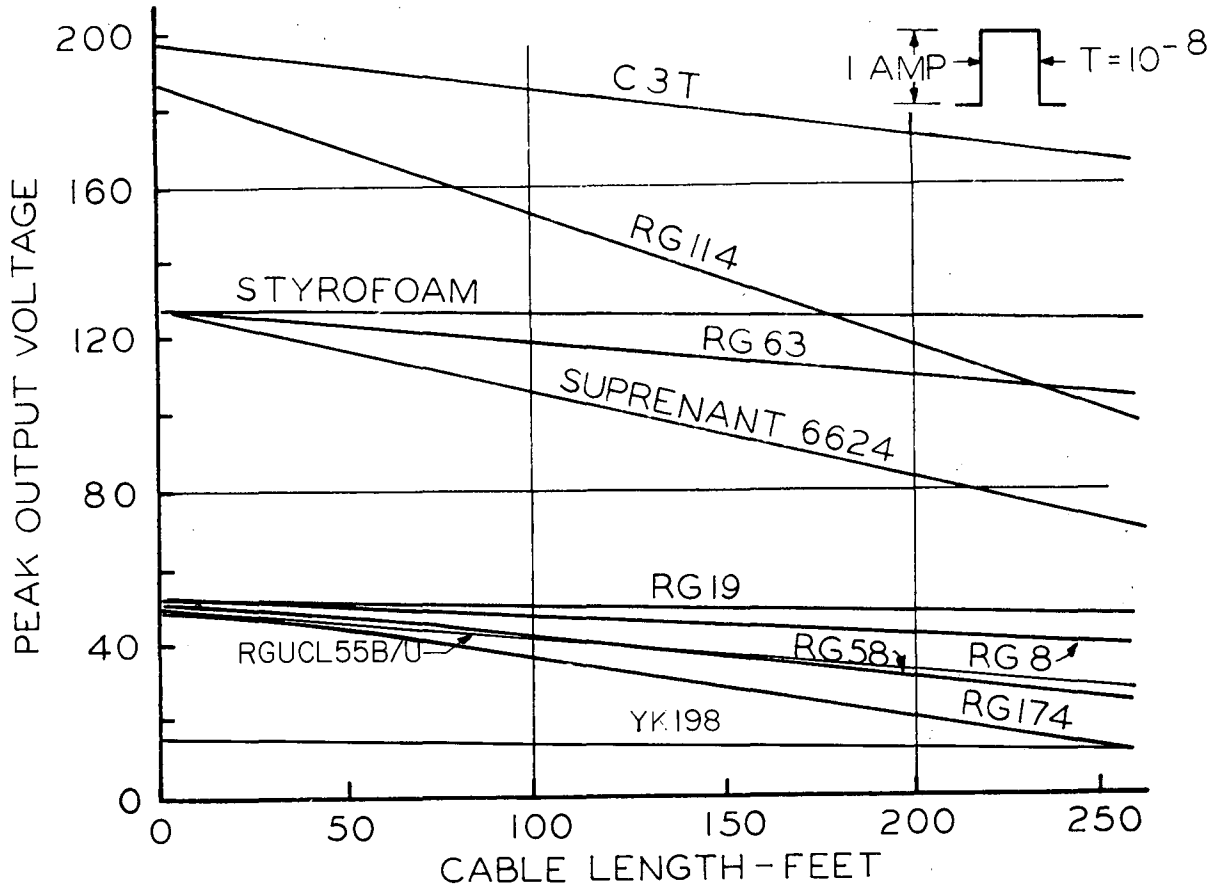
PEAK OUTPUT VOLTAGE
200
160
120
80
40
0
0
50
100
150
200
250
CABLE LENGTH - FEET
1 AMP
T = 10^-8
C3T
RG114
STYROFOAM
RG63
SUPRENANT 6624
RG19
RGUCL55B/U
RG58
RG8
RG174
YK198

Fig. 6(a)

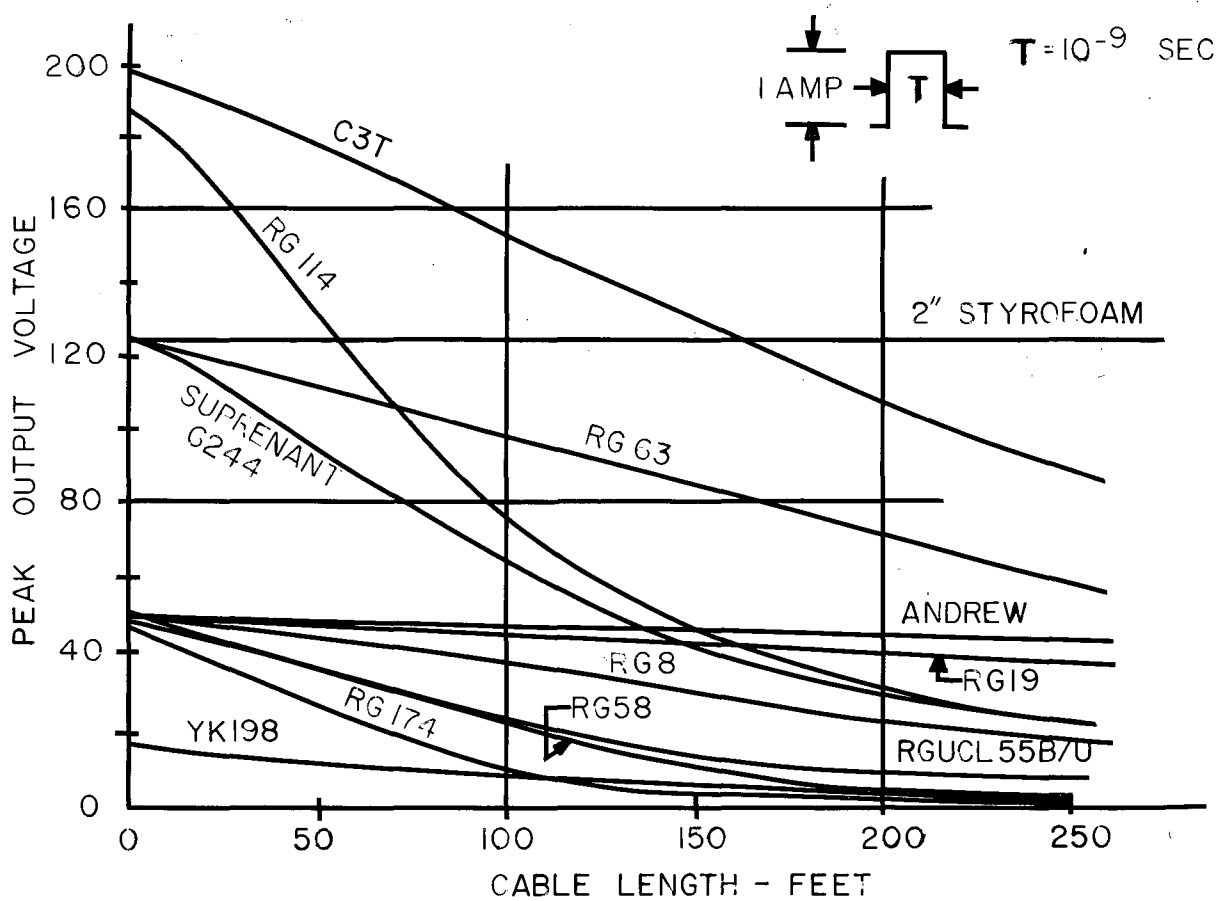
PEAK OUTPUT VOLTAGE
200
160
120
80
40
0
0
50
100
150
200
250
CABLE LENGTH - FEET
1 AMP
T
T = 10^-9 SEC
C3T
RG114
2" STYROFOAM
SUPRENANT 6244
RG63
ANDREW
RG8
RG19
RG58
RG174
YK198
RGUCL55B/U

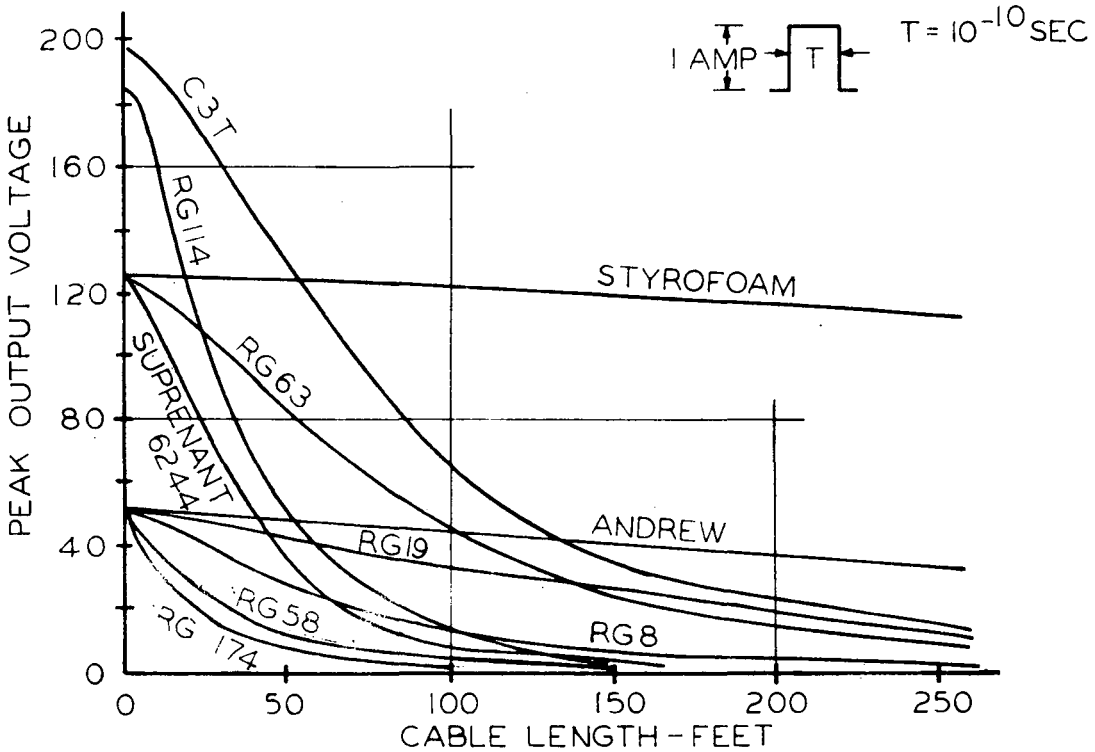

Fig. 6(c)

Peak amplitude of the output voltage pulse from some typical coaxial cables as a function of cable length. The assumed inputs are rectangular current pulses of 1 ampere amplitude and durations of 10^{-8}, 10^{-9} and 10^{-10} seconds. These curves are all replotted from Fig. 5 with suitable scale changes.

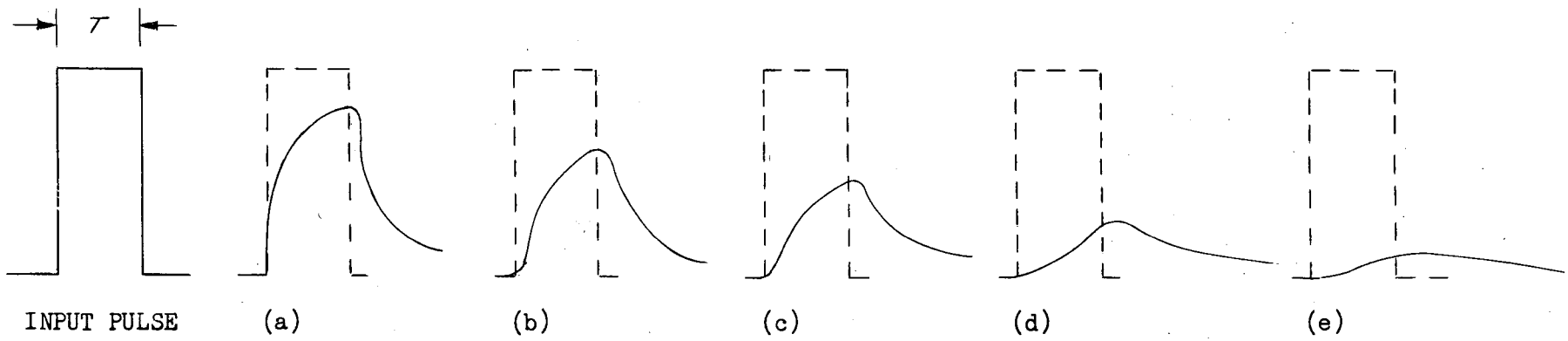

For T = 10^{-9} sec., the output pulse will have the shape and amplitude shown for the following cable lengths.

CABLE TYPE	(a)	(b)	(c)	(d)	(e)
RG174	23	41	67	90	110
RG58	30	56	93	136	156
RG8	77	145	240	350	400
RG63	95	180	290	430	500
2"Styrofoam	1200	2300	3700	5500	6400
C3T	90	170	280	400	470
RG114	37	70	110	170	200
RGUCL 55B/U	39	73	118	174	203
YK198	46	88	142	211	245

Fig. 7

The above waveforms show the deterioration of an originally rectangular pulse as it travels along a transmission line for which the decibel attenuation varies as the square root of frequency. For comparison purposes, the input pulse is also shown with each output waveform. The figures listed above give the cable lengths that will cause the distortion shown when T= 10^{-9} second. To find the cable lengths for which the output pulse will have the same form relative to the input pulse for other input pulse durations, multiply the above lengths by T, where T is the input pulse duration in millimicroseconds.

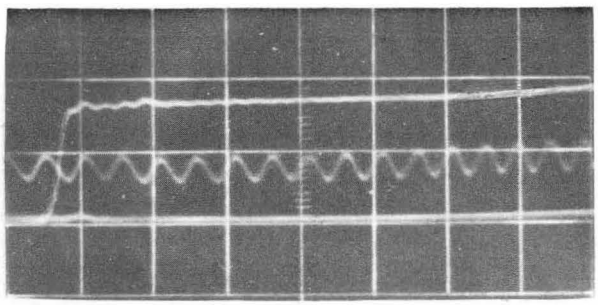

a. Input pulse.

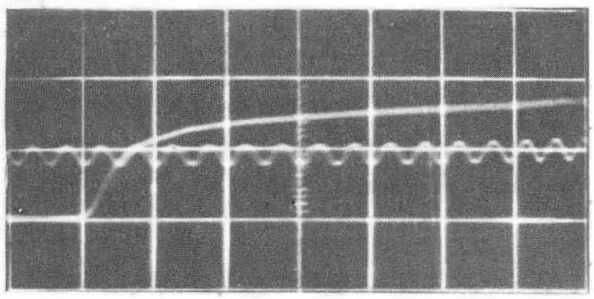

b. RG 9: $Z_o = 51$; d = 300 mus.
(RG 8 gives same response.)

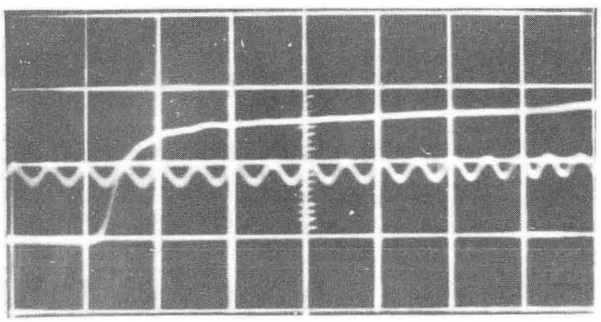

c. RG 19: $Z_o = 52$; d = 300 mus.

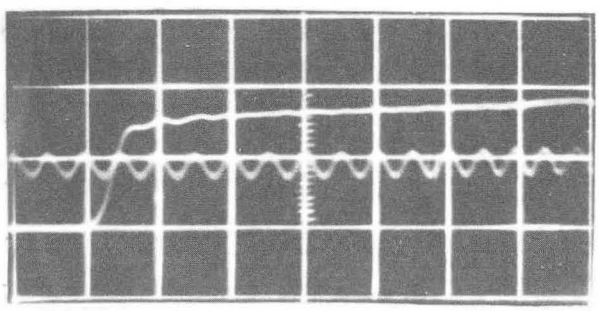

d. Andrew: $Z_o = 52$; d = 326 mus.

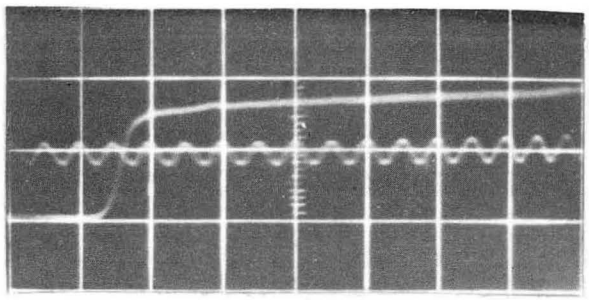

e. Styroflex: $Z_o = 50$; d = 317 mus.

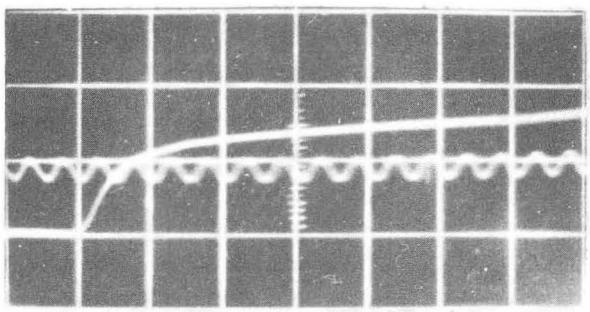

f. RG 63: $Z_o = 125$; d = 300 mus.
(21-342 and 21-406 give same response.)

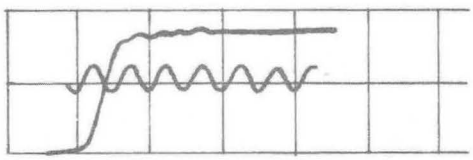

g. Styrofoam: $Z_o = 125$; d = 258 mus.

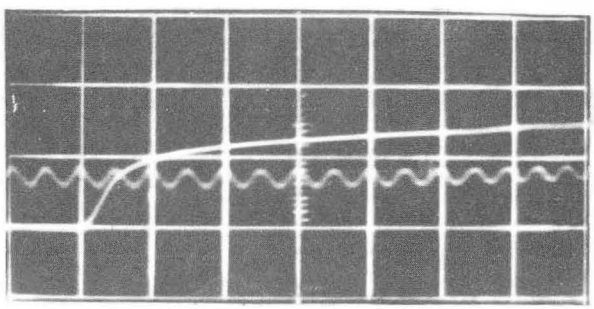

h. C3T: $Z_o = 197$; d = 300 mus.

Fig. 8. Photographs of the leading parts of pulses before and after transmission through some coaxial transmission lines used in counting work. All photographs taken with Dumont K1056 cathode-ray tube. a) Pulse applied to input end of transmission lines. b-h) Pulse appearing at output end of transmission line; d = electrical length in millimicroseconds. Frequency of timing wave is 1000 mc. Trace g) replotted from Fig. 4b to about same time scale as other traces of this series. Part of the upward tilt is caused by cathode-ray tube distortion. An estimate of the amount of this distortion can be made by referring to the three traces in a), where the lower trace is a zero reference.

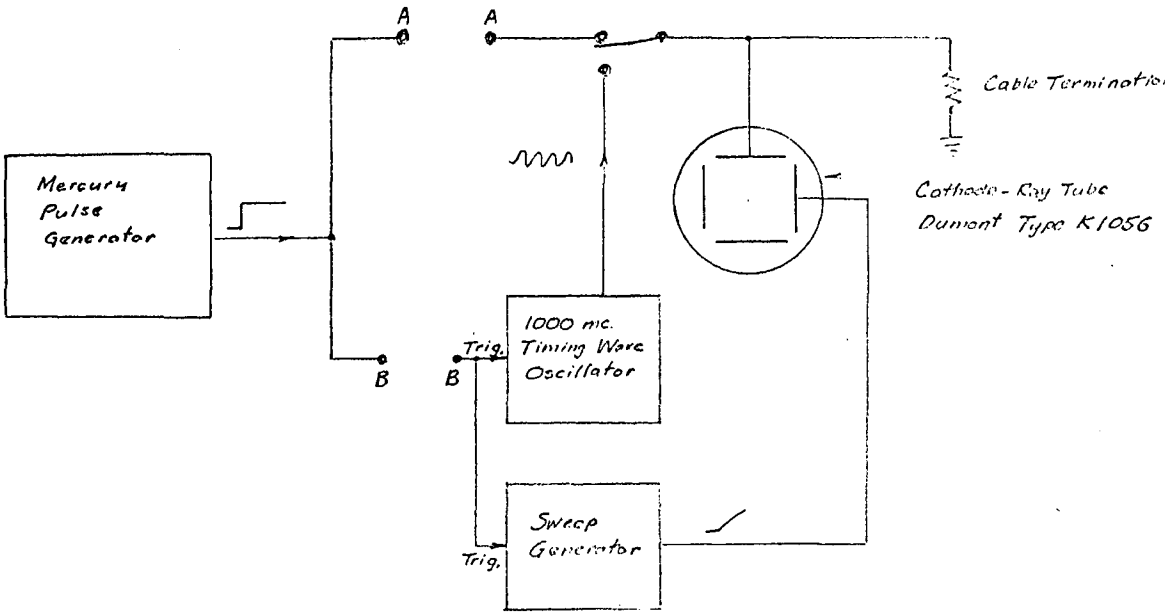

Fig. 9. Block diagram of equipment used to take the cable response photographs of Figure 8. The cable to be tested is placed between points A-A. A time delay of about 25 mus. less than that of A-A is placed between B-B.

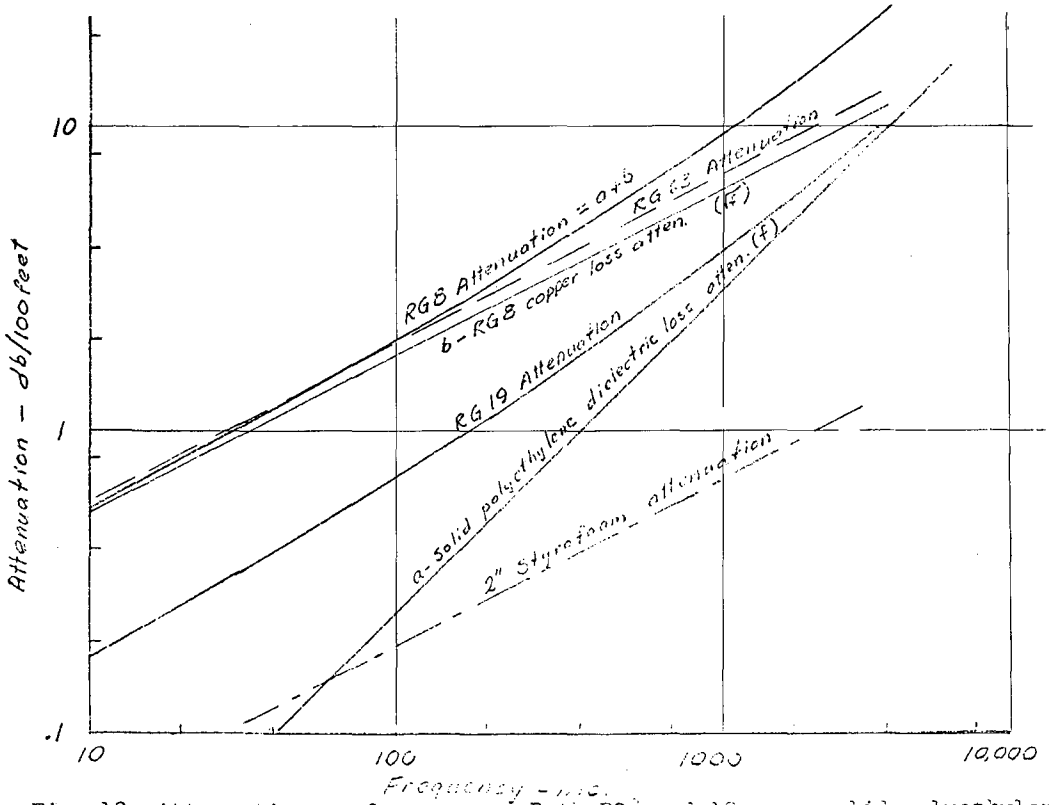

Fig. 10 Attenuation vs frequency. Both RG8 and 19 have solid polyethylene dielectrics, and their attenuation curves are asymptotic to curve a at higher frequencies. RG63 has a semi-solid polyethylene dielectric, and Styrofoam uses Styrofoam dielectric.

File No. CC 2-2C (1)
F. Kirsten and L. Proehl
Rev. May 31, 1966
F. Kirsten and R. Wallace

Lawrence Radiation Laboratory, University of California, Berkeley

COUNTING NOTE

PHYSICAL CHARACTERISTICS OF COAXIAL CABLES

Listings of some of the physical properties of certain commercially available coaxial cables and delay lines are given. The cables listed are those considered to be most probably applicable to counting work. Most of the numbers are taken from manufacturer's literature.

Following the cable listings is a section in which other properties and characteristics of dielectrics and coaxial transmission lines are given.

TABLE OF CONTENTS

I. Cable types most often used for counting purposes. Brief specifications included 2

II. Cable types of possible use for counting purposes.

- A. Listed by RG numbers 7
- B. Miniature types, (o.d. less than 0.191 inches) 10
- C. Rigid and Semi-Rigid types 11
- D. Delay cables 12

III. Properties of dielectrics used in coaxial cables 13

IV. Temperature coefficient of length of certain cables 14

V. Noise characteristics of cables 14

VI. Chart for converting attenuation data to risetime 15

VII. Nomograph for computing coaxial transmission-line impedance 16

VIII. Transmission line formulas 17

SPECIFICATIONS OF COAXIAL CABLES MOST OFTEN USED FOR COUNTING PURPOSES.

Numerical values are derived from manufacturers literature. In cases where different manufacturers give different numbers either an average value is given or else the range of values is indicated.

Cable type no.	Zo ohms	Cap. pf/ft	β=v/c vel. prop.	Diam. over-all	Outer - Conductor i.d. (in.)	Type	Inner - Conductor o.d. (in.)	Type
YK198	16	103	0.647	0.566	0.416	C	0.300	C
RG-8	52	29.5	0.659	0.415	0.285	C	0.085	STR
RG-9	50-51	30	0.659	0.430	0.280	SC-C	0.086	STR
RG-19A	52	29.5	0.659	1.135	0.910	C	0.250	SOL
RGUCL 55 B/U	50	~26	0.788	0.206-16	0.090	TC-TC	0.040	STR
RG-55B	53.5	~30	0.659	0.206	0.116	TC-TC	0.032	SOL
RG-58 & 58B	53.5	28.5	0.659	0.200	0.116	TC	0.032	SOL
RG-58A & 58C	50	~29.5	0.659	0.199	0.116	TC	~0.036	STR
RG-62 & 62A	93	13.5	0.84	0.249	0.146	C	~0.030	CW
RG-63 & 63B	125	10	0.84	0.415	0.285	C	~0.030	CW
RG-114A	185	6.5	0.84	0.405	0.285	C	0.007	SOL
RG-174	50	~30	0.659	0.105	0.060	TC	0.019	STR
RG-188	50	29.5	0.659	0.110	0.060	SC	0.018	STR
RG-196	50	28.5	0.659	0.084	0.034	SC	0.010	STR
C3T	197	5.4	0.95	0.64	0.472	C	0.015	STR
21-406	125	10	0.84	0.530	0.285	TC-C	0.030	SOL
6244	125	9.3	0.84	0.140		C	0.012	SOL
Foam Heliax								
1/2"	50		0.79	Note #1		CSC	0.158	TUB
7/8"	50		0.79	Note #1		CSC	0.313	TUB
Spir-o-Line	125	~9	0.9	0.875	0.84	AS	0.082	SOL
Styrofoam								
1½"	125	8.2e	0.99	~1.60	~1.54	Foil	0.188	TUB
2"	125	8.2e	0.99	~2.10	~2.05	Foil	0.250	TUB

(continued)

Cable type no.	Diel. Mtr'l	$K_{eff.}$ F.	Attenuation 100 Mc db/100 ft.	Attenuation 1000 Mc db/100 ft.	Rise-time T_0 ns.	Remarks
YK198	P	2.39[e]	4.1-4.6	13.2-14.6	.78 - .97	Al coated Mylar wrapped around inner braid (Bel.)
RG-8	P	2.3[e]	2.1	8.0-9.0	.29 - .37	
RG-9	P	2.3[e]	2.0-2.3	7.3-9.0	.24 - .37	Double shielded 8/U
RG-19A	P	2.3[e]	0.69	3.6	.59	Limited flexibility
RGUCL 55B/U	FP	1.61[e]	5.0-5.2	15.9-16.4	1.16 - 1.24	Double Shielded, (C)
RG-55B	P	2.3[e]	4.8	~16.9	1.27 - 1.32	Double Shielded.
RG-58 & 58B	P	2.3[e]	4.6-5.4	17.8-20	1.5 - 1.8	
RG-58A & 58C	P	2.3[e]	5.4-6.2	20-24	1.8 - 2.6	
RG-62 & 62A	SSP	1.42[e]	2.7	8.7-9.0	.35 - .37	
RG-63 & 63B	SSP	1.42[e]	2.0	6.5	.19	
RG-114A	SSP	1.35[e]	2.9		.39	Amphenol
RG-174	P	2.3[e]	9.0	30.0	4.1	
RG-188	T	2.3[e]	11.4	31.0	4.4	Amphenol
RG-196	T	2.3[e]	13.8	46.0	9.6	Amphenol & Microdot
C3T	PSB	1.1[e]	1.9	7.6[k]	.44	Transradio UCRL Specs (5Z9611)
21-406	SSP	~1.5	1.99	6.4		similar to 63/U Triaxial.
6244	SSP	~1.4	4.7[e]	15[e]	1.0	ITT Surprenant
Foam Heliax						
1/2"		1.6	0.81	3.33	0.051	Andrews. Min Rad 5"
7/8"		1.6	0.47	2.00	0.018	Andrews. Min Rad 10"
Spir-o-Line	PT	1.25	~0.6	1.4[e]	.0093	Prodelin
Styrofoam						
1½"	STY	~1.03	0.25	0.8	.0016	See (UCRL-3579)
2"	STY	~1.03	0.2	0.6	.0029	See (UCRL-3579)

DIELECTRIC MATERIAL CODING

FP --------- Polyethylene foam
P ---------- Polyethylene
PC --------- Polyvinyl chloride
PS --------- Polystyrene
PSB -------- Polystyrene beads
PT --------- Polyethylene tubes
SP --------- Polyethylene spiral
SSP -------- Semi-solid polyethylene
ST --------- Teflon Spiral
STY -------- Styrofoam
T ---------- Teflon
TPS -------- Polystyrene tape
TT --------- Teflon tape

MANUFACTURERS CODING

Amp ---- Amphenol-Borg Electronics Corp.
An ----- Andrew Corp.
C ------ Chester Cable Corp.
ITTR --- Inter.Tele. & Tele. Royal
ITTS --- Inter.Tele. & Tele. Surprenant
M ------ Microdot Inc.
Prod --- Prodelin
TR ----- Transradio Ltd.
Bel ---- Belden

INNER AND OUTER CONDUCTOR CODING

Al ------- Aluminum
AS ------- Solid aluminum
C -------- Copper
CSC ------ Corrugated solid copper
Cu ------- Copper
CW ------- Copper weld
Foil ----- Tin Cu foil wrapped & overlapped
SC ------- Silvered copper
SOL ------ Solid
STR ------ Stranded
TC ------- Tinned copper
TUB ------ Copper tubing

NOTE CODING

e ------- Calculated
f ------- Effective dielectric constant, $1/\beta^2$
h ------- Measured at 400 Mc.
j ------- Measured in micromicrofarad per foot.
k ------- Measured at 600 Mc.

Note #1.	Without jacket	o.d. = 0.540
	With jacket	o.d. = 0.660
Note #2.	Without jacket	o.d. = 0.980
	With jacket	o.d. = 1.100

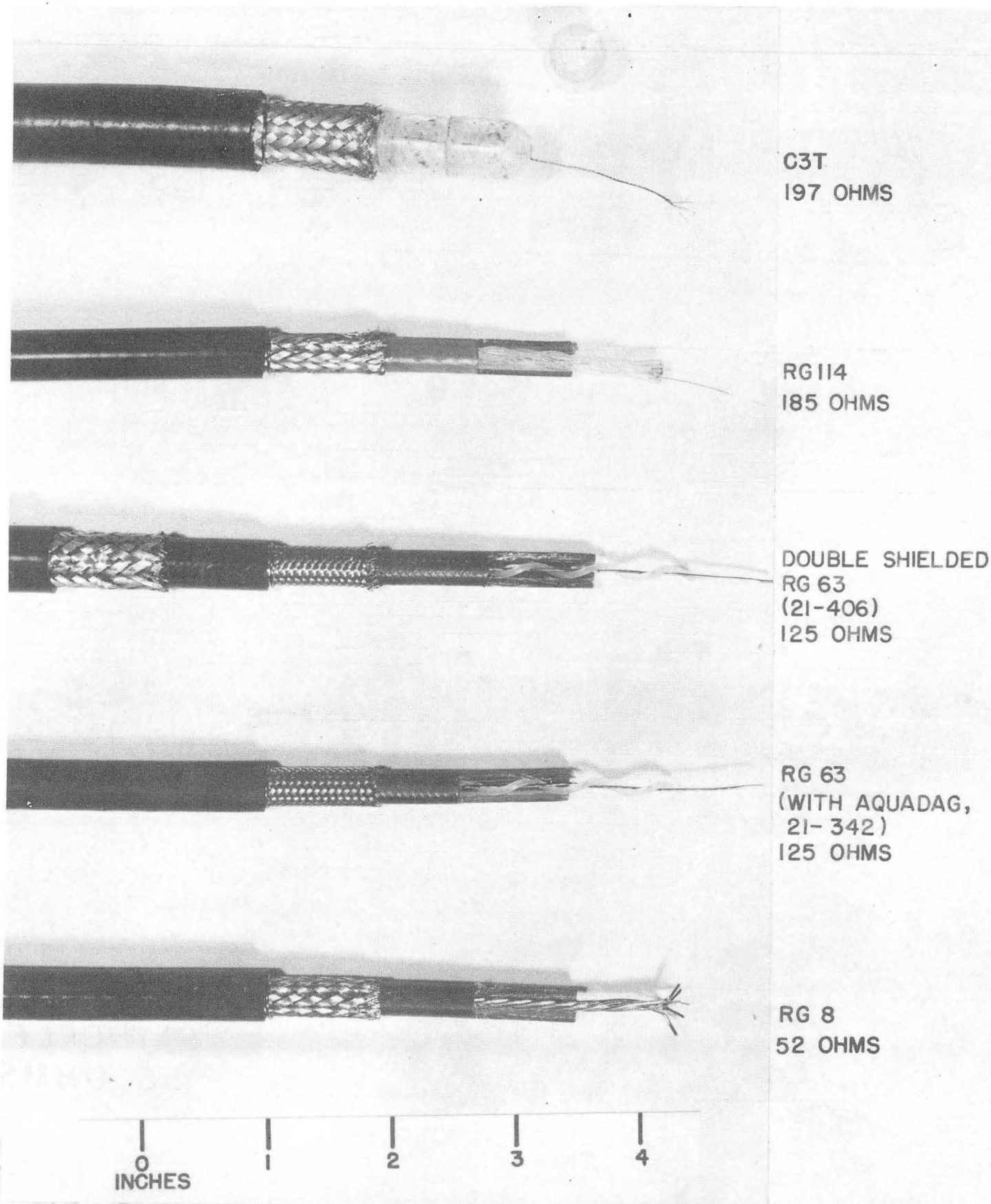

Fig. 1. A photograph of some flexible coaxial cables commonly used for counting applications.

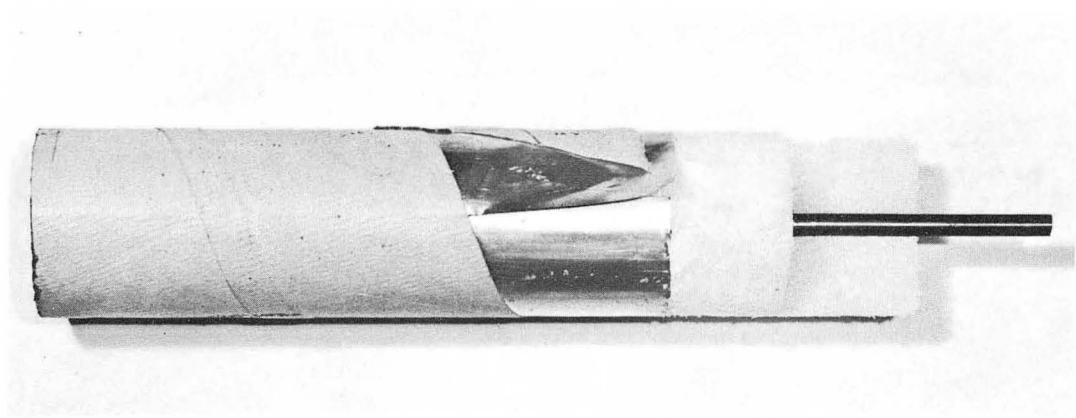

STYROFOAM
125 OHMS

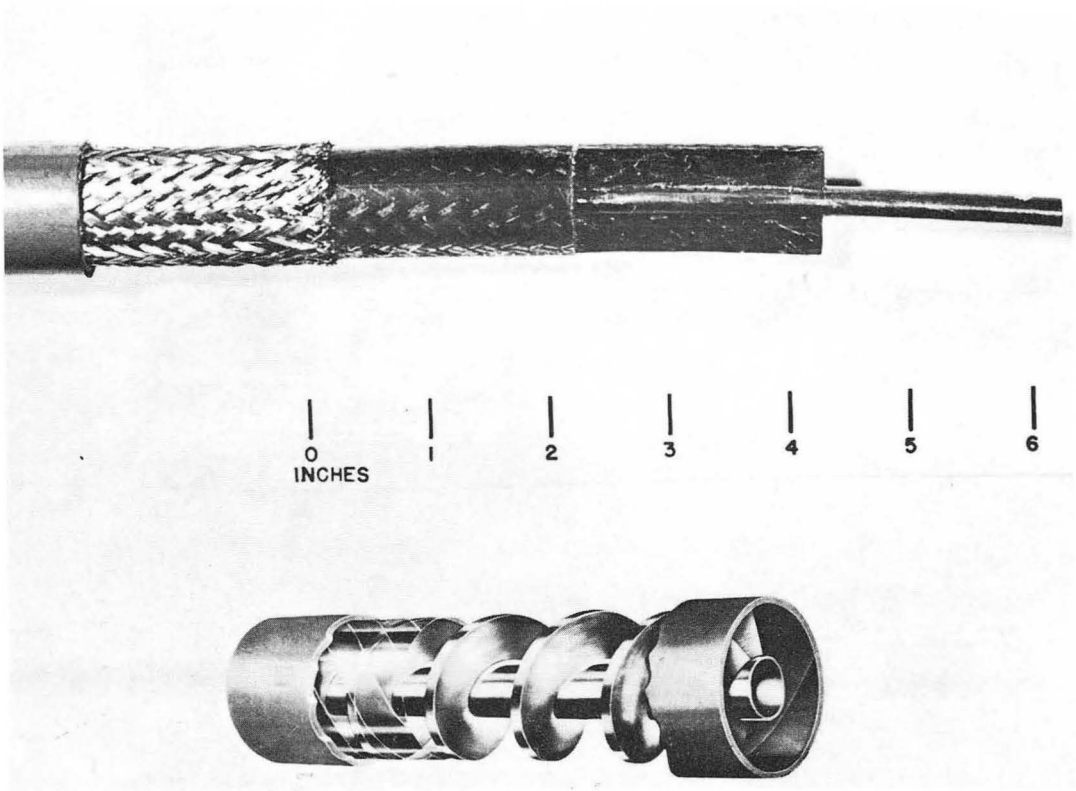

RG 19
52 OHMS

STYROFLEX
50 OHMS

Fig. 2. Photographs showing the construction of some rigid and semi-rigid coaxial transmission lines.

II-A. Cable types of possible use for counting purposes.

ARRANGED BY RG NUMBERS

Cable Type Number	Zo	Diel. Mtr'l.	O.D. of Outer Jacket	Atten. @ 1000 Mc db/100'	Cap. per foot j.	Remarks
RG-5B/U	50	P	0.328	9.1	29.5	Replaced by 212/U
6A	75	P	0.332	11.3	20	
8	52	P	0.405	8.0	29.5	
8A	52	P	0.405	8.0	30.5	Replaced by 213/U
9	50	P	0.420	7.3	30	
9A	50	P	0.420	9.0	30	
9B	50	P	0.420	9.0	30.5	Replaced by 214/U
10A	52	P	0.475	8.0	30.5	Replaced by 215/U
11	75	P	0.405	7.8	20.5	
11A	75	P	0.405	7.8	20.5	
12A	75	P	0.475	7.8	20.5	11A/U with armor
13	74	P	0.425	7.8	20.5	
13A	74	P	0.420	7.8	20.5	Replaced by 216/U
14A	52	P	0.545	5.5	30.0	Replaced by 217/U
17	52	P	0.870	4.4	29.5	
17A	52	P	0.870	4.4	29.5	Replaced by 218/U
18A	52	P	0.945	4.4	29.5	Replaced by 219/U
19A	52	P	1.120	3.6	29.5	Replaced by 220/U
20A	52	P	1.195	3.6	29.5	Replaced by 221/U
21A	53	P	0.332	43.0	30	
22	95	P	0.405	8.7-h	16	
22B	95	P	0.420	12.0	16	
34B	75	P	0.630	5.85	21.5	
35B	75	P	0.945	3.5	21	Armored.
RGUCL 55B/U	50	FP	0.211	16.0	26	Made to LRL Spec.
55B	53.5	P	0.206	16.7	28.5	Replaced by RGUCL 55B/U
57A	95	P	0.625	6.0-h	16	
58	53.5	P	0.195	17.8	28.5	
58A	50	P	0.195	24.0	29.5	
58C	50	P	0.195	24.0	29.5	
59	73	P	0.242	12.0	21	

DIELECTRIC MATERIAL CODING

FP-----Polyethylene foam.
P------Polyethylene
PC-----Polyvinyl Chloride
SSP----Semi-solid Polyethylene
SST----Semi-solid teflon
T------Teflon
TT-----Teflon tape

NOTE CODING

e------Calculated.
h------Measured at 400 Mc.
j------Micromicrofarads per foot
k------Measured at 600 Mc.

II-A. (Continued)

Cable type Number	Zo	Diel. Mtr'l.	O.D. of Outer Jacket	Atten. @ 1000 Mc db/100'	Cap. per foot j.	Remarks
RG-59B/U	75	P	0.242	12	20.5	
62	93	SSP	0.242	8.7	13.5	
62A	93	SSP	0.242	8.7	13.5	
62B	93	SSP	0.242	7.3-h	13.5	
63	125	SSP	0.405	6.4	10	
63B	125	SSP	0.405	6.4	10	
71A	93	SSP	0.245	8.7	13.5	
71B	93	SSP	0.245	8.7	13.5	
74A	52	P	0.615	5.5	29.5	Replaced by 224/U
79B	125	SSP	0.475	6.4	10	63/U with Armor.
87A	50	T	0.425	7.6	29.5	Replaced by 225/U
108A	78	P	0.235	16.8-h	23.5	
111A	95	P	0.490	12	16	22B/U with Armor.
114	185	SSP	0.405	5.4*	6.5	*at 200 Mc.
114A	185	SSP	0.405	5.4*	6.5	*at 200 Mc.
115	50	TT	0.375	7.3	29.5	
115A	50	TT	0.415	7.3	29.5	
116	50	T	0.475	7.6	29.5	Replaced by 227/U
117	50	T	0.730	3.6	29	Replaced by 211/U
119	50	T	0.730	3.6	29	
122	50	P	0.160	29	29.5	
140	75	T	0.233	12.8	21	
141	50	T	0.190	13.8	28.5	
141A	50	T	0.190	13.8	28.5	
142	50	T	0.206	13.8	28.5	
142A	50	T	0.206	13.8	28.5	
143	50	T	0.325	9.6	28.5	
143A	50	T	0.325	9.6	28.5	
144	75	T	0.410	6.9	20.5	
149	75	P	0.405	8.5-h	20.5	Low loss 11/U
164	75	P	0.870	3.5	21	35 B/U less Armor.
178A	50	T	0.075	46	28.5	
149A	75	T	0.105	24	19.5	

DIELECTRIC MATERIAL CODING

FP-----Polyethylene foam
P------Polyethylene
PC-----Polyvinyl Chloride
SSP----Semi-solid Polyethylene
SST----Semi-solid teflon
T------Teflon
TT-----Teflon tape

NOTE CODING

e------Calculated.
h------Measured at 400 Mc.
j------Micromicrofarads per foot
k------Measured at 600 Mc.

II-2. (Continued)

Cable type Number	Zo	Diel. Mtr'l.	O.D. of Outer Jacket	Atten. @ 1000 Mc db/100'	Cap. per foot j.	Remarks
RG-180	93	T	0.141	17	15	
180A	95	T	0.145	17	15	
187	75	T	0.110	24	19.5	
188	50	T	0.110	31	29	
195	95	T	0.155	17	15	
196	50	T	0.080	46	28.5	
209	50	SST	0.750	2.5-h	26.5	
210	95	SST	0.242	7.0-h	13.5	Formerly 62C/U
211	50	T	0.730	3.6	29	Formerly 117/U
212	50	P	0.332	9.1	29.5	Formerly 5B/U
213	50	P	0.405	8.0	29.5	Formerly 8A/U
214	50	P	0.425	9.0	29.5	Formerly 9B/U
215	50	P	0.475	8.0	29.5	Formerly 10A/U
216	75	P	0.425	7.8	20.5	Formerly 13A/U
217	50	P	0.545	5.5	29.5	Formerly 14A/U
218	50	P	0.870	4.4	29.5	Formerly 17A/U
219	50	P	0.945	4.4	29.5	Formerly 18A/U
220	50	P	1.120	3.6	29.5	Formerly 19A/U
221	50	P	1.195	3.6	29.5	Formerly 20A/U
222	50	P	0.332	43.0	29	Formerly 21A/U
223	50	P	0.216	16.7	29.5	Formerly 55A/U
225	50	T	0.430	7.6	29.5	Formerly 87A/U
226	50	TT	0.500	3.5-h	29.5	Formerly 94A/U
227	50	T	0.490	7.6	29.5	Formerly 116/U
K-113	35	FP	0.195	12-h	39	
60-3905	30	PC	0.045		65	
YK 198	16	P	0.566	13.2	103	Mfr: Belden

DIELECTRIC MATERIAL CODING

FP-----Polyethylene foam
P------Polyethylene
PC-----Polyvinyl Chloride
SSP----Semi-solid Polyethylene
SST----Semi-solid teflon
T------Teflon
TT-----Teflon tape

NOTE CODING

e------Calculated.
h------Measured at 400 Mc.
j------Micromicrofarads per foot
k------Measured at 600 Mc.

II-B. Cable types of possible use for counting purposes.

MINIATURE TYPES
(Those with o.d. less than or equal to 0.190 inches.)

CABLE TYPE NUMBER	MFR.	Zo	Diel. Mtr'l.	O.D. of Outer Jacket	Atten. @ 1000 Mc db/100'	Cap. per foot j.	REMARKS
RG-122/U		50	P	0.160	29	29.5	
RG-141/U		50	T	0.190	14	28.5	
RG-141A/U		50	T	0.190	14	28.5	
RG-174/U		50	P	0.100	18-h	29.5	
RG-178A/U		50	T	0.075	46	28.5	
RG-179A/U		75	T	0.105	24	19.5	
RG-180/U		93	T	0.141	17	15.5	
RG-180A/U		95	T	0.145	17	15	
RG-187/U		75	T	0.110	24	19.5	
RG-188/U		50	T	0.110	31	29	
RG-195/U		95	T	0.155	17	15	
RG-196/U		50	T	0.080	46	28.5	
21-597	Amp.	75	P	0.150	12-h	20	
60-3905	M.	30	T	0.045		65	

MANUFACTURER CODING

Amp. ------Amphenol
M.---------Microdot

DIELECTRIC MATERIAL CODING

P----------Polyethylene
T----------Teflon

NOTE CODING

h----------Measured at 400 Mc.
j----------Capacity is in micromicrofarad per foot.

II-C. Cables types of possible use for counting purposes.

RIGID AND SEMI-RIGID CABLE TYPES

Cable Type Number		Mfr.	Zo	Diel. Mtr'l.	O.D. of Outer Jacket	Atten. @ 1000 Mc db/100'	Cap. per foot j.	Remarks
	21-592	Amp.	50	P	0.325	7.6	29.5	8/U with solid Cu Shield.
	21-606	Amp.	50	P	0.325	7.6	29.5	8/U with solid Al shield.
	21-607	Amp.	75	P	0.325	7.5		11/U with solid Al shield.
	421-608	Amp.	50	T	0.325	6.2		87A/U with solid Al shield.
	421-609	Amp.	75	T	0.325	6.0		144/U with solid Al shield.
	FH4	An.	50	FP	0.540	3.33		Corrugated solid Cu shield. Minimum radius 5".
	FHJ4	An.	50	FP	0.660	3.33		Corrugated solid Cu shield. Minimum radius 5".
	FH5	An.	50	FP	0.980	2.00		Corrugated solid Cu shield. Minimum radius 10".
	FHJ5	An.	50	FP	1.100	2.00		Corrugated solid Cu shield. Minimum radius 10".
RG-268/U	H3-50	An.	50	SP	0.500	5.00		Corrugated solid Cu shield. Minimum radius 5".
RG-269/U	H5-50	An.	50	SP	1.005	1.07		Corrugated solid Cu shield. Minimum radius 10".
RG-285/U	H5-100	An.	100	ST	1.005	1.07		Corrugated solid Cu shield. Minimum radius 10".
RG-270/U	H7-50	An.	50	SP	1.830	0.79		Corrugated solid Cu shield. Minimum radius 20".
	H7-100	An.	100	SP	1.830	0.79		Corrugated solid Cu shield. Minimum radius 20".
--		Prod	125	PT	0.875	1.4-e	9	Solid Al shield.
Styroflex		P-D	50	TPS	0.875	1.6	22	Minimum radius 10".
Styroflex		P-D	50	TPS	3.125	0.5	22	Minimum radius 50".
Styrofoam		UCRL	125	SF	1.500	0.8		UCRL Spec. (3597).
Styrofoam		UCRL	125	SF	2.000	0.6		UCRL Spec. (3597).

DIELECTRIC MATERIAL CODING

FP-----Polyethylene foam.
P------Polyethylene.
PT-----Polyethylene tubes.
SF-----Styrofoam
SP-----Polyethylene spiral.
ST-----Teflon spiral
T------Teflon
TPS----Polystyrene

MANUFACTURERS CODING

Amp----Amphenol-Borg Electronics Corp.
An-----Andrew Corp.
P-D----Phelps-Dodge Electronics Products Corp.
PROD---Prodelin Inc.
UCRL---U.C. Radiation Laboratory Specs.

NOTE CODING

e------Calculated
j------Micromicrofarads per foot

INNER & OUTER CONDUCTOR CODING

Al-----Aluminum
Cu-----Copper

II-D. Cable types of possible use for counting purposes.

1. DELAY CABLES

Cable Type	Number	Mfr.	Zo ± 10%	Delay a.	Band-width b.	D.C. ohms ft.	O.D. inch	Inner Cond. AWG	Loss Insert. c.	Max. volts	Min. Radius inches
RG-266/U	HH1500A	CTC	1500	0.08	15	30	0.40	29	0.20	5000	2
	HH1600	CTC	1700	1.0	6	80	0.28	38	0.40	300	3
RG-176/U	HH2000	CTC	2400	0.11	15	70	0.40	32	0.25	5000	2
	HH2500	CTC	3000	0.60	8	125	0.28	38	0.30	500	3
	HH4000	CTC	3900	1.0	6	85	0.32	38	0.20	1000	4
	65A	Royal	950	0.043			0.415	32		3000	

NOTES:

a) Microsecond per foot, plus or minus 10%.
b) Band-width at one microsecond delay.
c) db loss per microsecond delay.

MANUFACTURER CODING

CTC) Columbia Technical Corporation.
Royal) Inter. Tele. & Tele. Royal

III. PROPERTIES OF DIELECTRICS USED IN COAXIAL CABLES

	Polyethylene	Teflon (polytetra-fluoroethylene)	Polystyrene	Styrofoam 22 (foamed poly-styrene)	Air
Dielectric constant at 10^8 cps	2.25	2.0b	2.4 - 2.65a	1.025	1.00059e
Dissipation factor at 10^8 cps	$<$0.0005	$<$0.0003b	0.0001-0.0004a @ 10^6 cps		
Temperature variation of dielectric constant per °C (at constant pressure of 1 atmos.)	-0.0007d	-0.0003c	-0.0005d		
Dielectric strength, short-time 1/8" thickness, volts/mil	460a	480a	500-700a		
Volume resistivity, ohm-cm, 50% humidity, 23 °C	$1\text{-}2\times10^{13}$a	$>10^{15}$a	10^{17}-10^{19}a		
Refractive index, n_d	1.51a	1.35a	1.59-1.60a		1.00029e
Coefficient of linear thermal expansion, parts per 10^6/°C	160-180a	100	60-80a	70f	
Mechanical distortion temp., °C	41-50a	135g @ 66 psi	70-100a	80f	
Brittleness temperature, °C	-70	-76			
Effect of sunlight	surface crazing-a	none-a	yellows slightly-a	yellows-f	
Effect of dielectric on metal inserts	inert	inert			
Specific gravity	0.92a	2.1-2.3a	1.04-1.065a	0.021-0.027f	
Moisture absorption, 24-hr immersion, 1/8" thick., %	$<$0.015a	0.005a	0.03-0.05a	0.20 lb H_2O/ft^2 surface area in a week	

References: - a) Modern Plastics Encyclopedia, 1955; b) DuPont specs; c) National Bureau of Standards Journal of Research, vol 51, p. 185; d) Calculated; e) Chem. Rubber Hdbk.; f) Dow Chem. Co. specs.; g) Ethylene Chem. Corp.

IV. Temperature coefficient of length of certain cables.

RG 8, 63, 87A. The temperature coefficient of electrical length is a function of temperature, but near room temperatures, the coefficient is essentially a constant. Measured values are tabulated below.

Cable type	Temp. coeff.	In temp. range
RG 8	$\sim 2\times 10^{-4}$	$+ 20^{\circ}$ to $+ 50^{\circ}C$*
63	$\sim 1\times 10^{-4}$	$- 20^{\circ}$ to $+ 50^{\circ}C$
87A	$\sim 1\times 10^{-4}$	$- 60^{\circ}$ to $+ 50^{\circ}C$

* Not measured below $+ 20^{\circ}C$.

A 100 foot length of RG 63 will therefore change its electrical length about 0.012 millimicroseconds per degree antigrade.

UCRL Styrofoam: Measurements showed the temperature coefficient to be within $\pm 2\times 10^{-5}$ parts per $^{\circ}C$. (The linear expansion of the copper conductors is $+ 2\times 10^{-5}$ parts per $^{\circ}C$).

V. Noise

"Internal noise" - Owing to manufacturing tolerances the characteristic impedance of a coaxial cable varies along its length. When a pulse travels along the line, reflections are generated by the changing impedance levels. The signal at the output, then, consists of the original pulse followed by a series of smaller, internally generated pulses, the latter referred to as "internal noise." When a pulse from a mercury pulse of risetime $< 5\times 10^{-10}$ is transmitted along a cable such as RG8 or RG 63, the amplitude of the internal-noise pulses observed is of the order of 1% of the amplitude of the initial pulse, when the observing instrument has a risetime of $\sim 10^{-9}$ seconds (517' scope-direct connections to deflecting plates). Cables having closer mechanical tolerances (e.i. Styroflex) exhibit internal noise of smaller amplitude relative to the signal pulse.

VI.

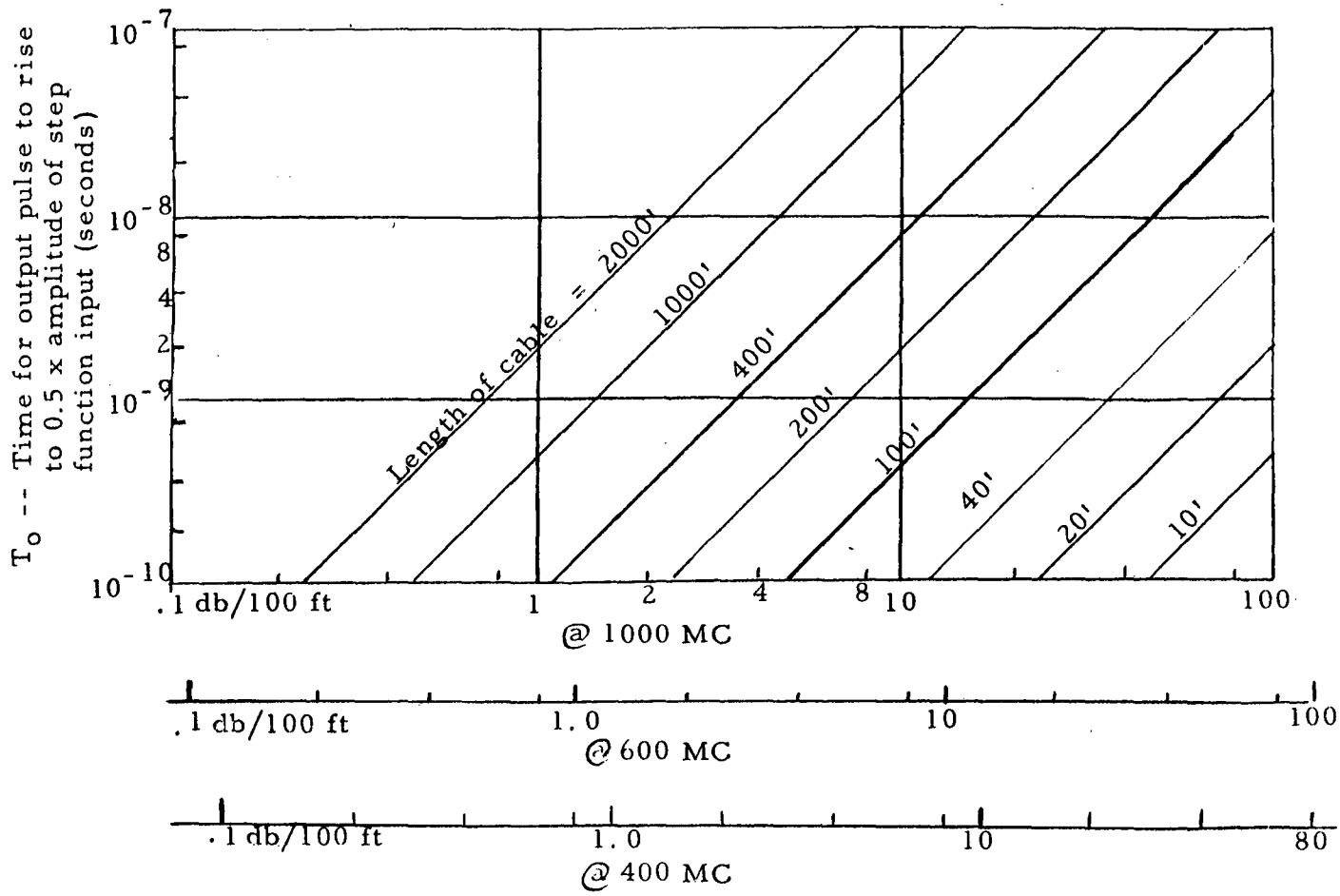

α -- ATTENUATION AT INDICATED FREQUENCIES (db/100 feet)

RISE TIME CONVERSION FACTORS

For pulses of the shape shown in Fig. 5 of CC2-1, the rise times from 0 to x% can be expressed as multiples of T_o, where T_o is the 0 to 50% rise time. Pulses of this shape are generated when step-function waveforms are applied to the inputs of transmission lines for which attenuation varies as $(\text{frequency})^{1/2}$. (See CC2-1)

x	$\frac{\text{0 to x\% rise time}}{T_o}$
10	0.17
20	0.28
50	1.0
70	3.1
80	7.3
90	29
95	110

The 10 to 90% rise time is thus $(29 - 0.17)\ T_o = 28.83\ T_o$.

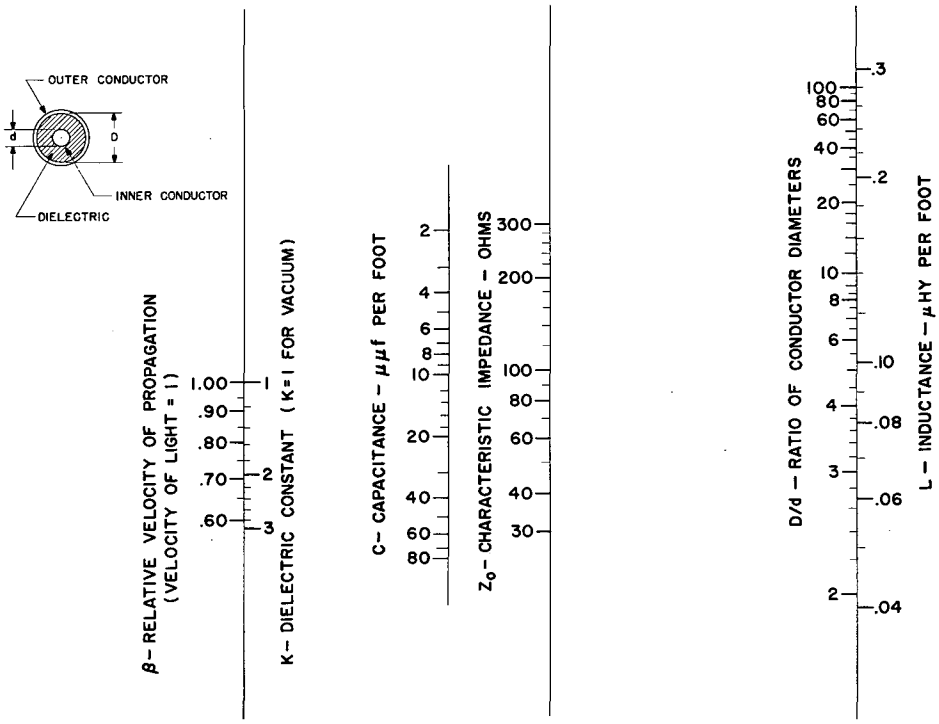

COAXIAL TRANSMISSION LINES IMPEDANCE NOMOGRAPH

MU-12192

A single straight line intersecting the four vertical scales represents a possible coaxial transmission line. Known points on any two scales may be used to define the location of the line.

VIII. Transmission line formulas

1. Z_o - characteristic impedance of coaxial lines with perfectly conducting conductors

$$Z_o = \sqrt{\frac{\mu}{\epsilon}} \frac{1}{2\pi} \ln_\epsilon \frac{D}{d} \text{ ohms}$$

For dielectrics for which $\mu = \mu_o$ (this includes the commonly used dielectrics)

$$Z_o = \frac{377}{2\pi\sqrt{K}} \ln_\epsilon \frac{D}{d} = \frac{60}{\sqrt{K}} \ln_\epsilon \frac{D}{d}$$

$$= \frac{138}{\sqrt{K}} \log_{10} \frac{D}{d}$$

where

μ = permeability of dielectric - henries/meter

μ_o = permeability of vacuum
$\cong 4\pi \times 10^{-7}$ henry/meter

ϵ = permittivity of dielectric - farads/meter

ϵ_o = permittivity of vacuum
$\cong \frac{1}{36\pi} \times 10^{-9}$ farads/meter

K = dielectric constant
$= \frac{\epsilon}{\epsilon_o}$

D = inside diameter of outer conductor

d = outside diameter of inner conductor

. The impedance of a transmission line having distributed inductance (L - henries per unit length) and distributed capacitance (C - farads per unit length) is, neglecting the effects of conductor resistance,

$$Z_o = \sqrt{\frac{L}{C}}$$

2. v - Velocity of propagation of transmission-line waves (TEM mode)

$$v = \frac{1}{\sqrt{\mu\epsilon}} \text{ meters/second}$$

where μ, ϵ are respectively the permeability and permittivity of the dielectric.

For dielectrics for which $\mu = \mu_o$,

$$v = \frac{3 \times 10^{8*}}{K} \text{ meters/second}$$

$$\beta = \frac{v}{c} = \frac{1}{\sqrt{K}}$$

c = velocity of propagation in vacuum.

Along a transmission line having distributed inductance (L - henries per unit length) and distributed capacitance (C - farads per unit length) the velocity of propagation is

$$V = \frac{1}{\sqrt{LC}}$$

3. L, C - Distributed inductance and capacitance.

$$L = \frac{Z_o}{v} \text{ henries per meter}$$

$$= 1.01 \frac{Z_o}{\beta} \times 10^{-3} \text{ microhenries per foot}$$

$$C = \frac{1}{Z_o v} \text{ farads per meter}$$

$$= \frac{1.01 \times 10^3}{\beta Z_o} \text{ micro microfarads per foot}$$

For coaxial lines:

$$C = \frac{7.354\ K}{\log_{10} D/d} \text{ micro microfarads per foot}$$

$$L = 0.14 \left(\frac{\mu}{\mu_o}\right) \log_{10} \frac{D}{d} \text{ microhenries per foot}$$

4. α - Attenuation. Two important causes of attenuation are losses in the conductors and losses in the dielectrics.

A. α_c - Attenuation due to conductor losses

$$\alpha_c = 0.43 \times 10^{-3} \sqrt{f} \left(\frac{1/D + 1/d}{Z_o}\right) \sqrt{\frac{\sigma_c}{\sigma}} \text{ db/100 feet}$$

D, d = outer, inner diameters-inches

f = frequency - cycles per second

---

* The effective figure 3×10^8 meters/sec for the velocity of electromagnetic waves in free space is a commonly used approximation. A more accurate figure is 2.9977×10^8 meters/sec.

σ_c = conductivity of copper

= 1.724×10^{-8} ohm meters (annealed copper @ 20°C)

σ = effective* conductivity of metal used for conductors - ohm meters

For solid metals -	Silver	Copper	Aluminum	Brass	Solder
$\sqrt{\sigma_c/\sigma}$	0.97	1.00	1.25	1.93	2.86

B. α_D Attenuation due to dielectric losses

For cables with solid dielectric,

$$\alpha_D = 2.8 \times 10^{-7} \frac{f\tau}{\sqrt{K}} \text{ db/100 feet}$$

(independent of Z_o)

where

τ = Dissipation factor of dielectric

= K x power factor of dielectric

5. T_o - Rise time of cable. T_o is the time for the output pulse to rise from 0 to 50% of the amplitude of step-function applied to input. See the table on p. 23 to find values of rise times defined in different ways. The equation given below is valid for output pulses having frequency components predominately in the frequency range where the attenuation α is due mainly to losses in the conductors (i.e. $\alpha_c >> \alpha_D$) and therefore varies as $(\text{frequency})^{1/2}$.

$$T_o = \left[\frac{b\,\ell}{0.6745}\right]^2 \text{ seconds}$$

ℓ = length of cable in feet

b = cable loss factor

= 1.45×10^{-8} A - feet^{-1} sec$^{\frac{1}{2}}$

α = cable attenuation feet at frequency f - db/100 feet

f = frequency - cycles per second.

* The effective conductivity of an actual conductor may differ from that of the solid metal owing to surface imperfections and discontinuities in braids, etc., and impurities.

COUNTING NOTE

LINE STRETCHER--125 OHM TROMBONE

The line stretcher shown below in Fig. 1 was developed for the purpose of inserting a variable time delay of $\pm 10^{-9}$ sec. into 125 ohm cable systems with negligible distortion or attenuation effects on millimicrosecond pulses.

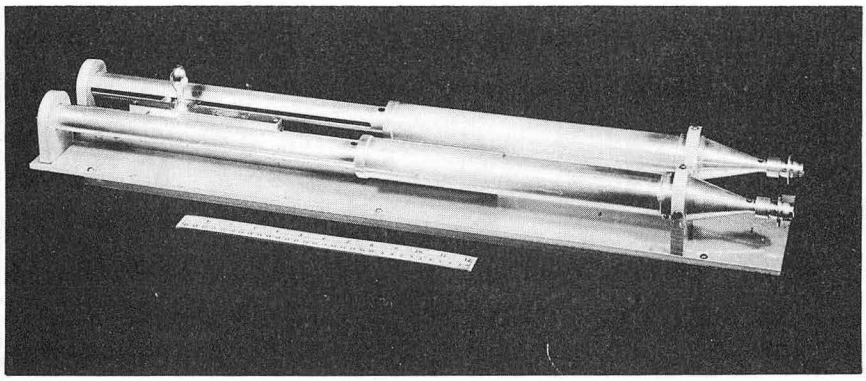

Fig. 1 View of Line Stretcher

Each side of the stretcher consists of two 125 ohm coaxial sections which are different in scale factor. On either side the center conductor of the smaller section slides up and down inside the center conductor of the larger section. The unused length of the smaller section acts as a circular waveguide beyond cutoff, and consequently, does not propagate pulse signals effectively. As seen in the photograph, the input and output connectors and tapered transitions are located at one end of the structure.

When viewed directly on a 5XP-oscilloscope tube, pulses from a mercury generator are reflected by less than 2% (reactive) for any position of the slider. Fig. 2 indicates that the reflected products are quite small for this resolution.

The coaxial sections, transitions etc. are silver-plated brass, and are mounted on an aluminum alloy baseplate. The assembly is 6 inches wide, suitable for mounting on the center panel separating the two sides of a standard UCRL double rack.

Reference: UCRL Dwg. No. 2X 6134

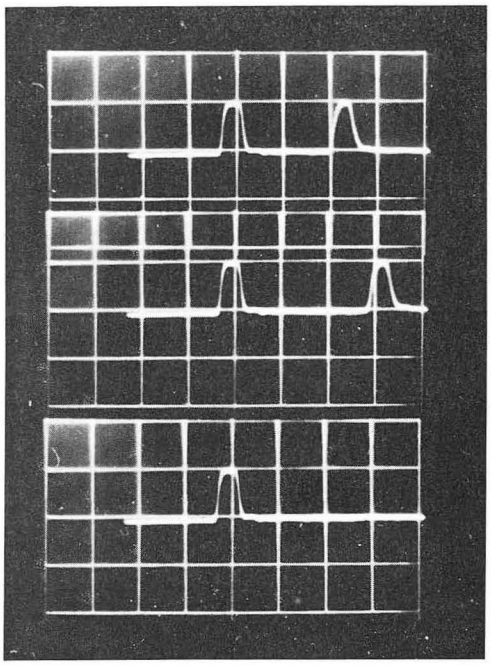

(A) First pulse is incident pulse, second is reflected pulse from open circuit on input connector.

(B) First pulse is incident pulse, second is reflected pulse from open circuit on output connector.

(C) First pulse is incident pulse, reflections coming from stretcher should occur between reflected pulses shown in (A) and (B).

Vertical 18 volts/cm.
Horizontal 10^{-8} sec./cm.

Fig. 2 Reflections

The time delay can be varied over a 2×10^{-9} sec. range with a minimum delay of 3.8×10^{-9} sec. Fig. 3 illustrates the delay characteristics.

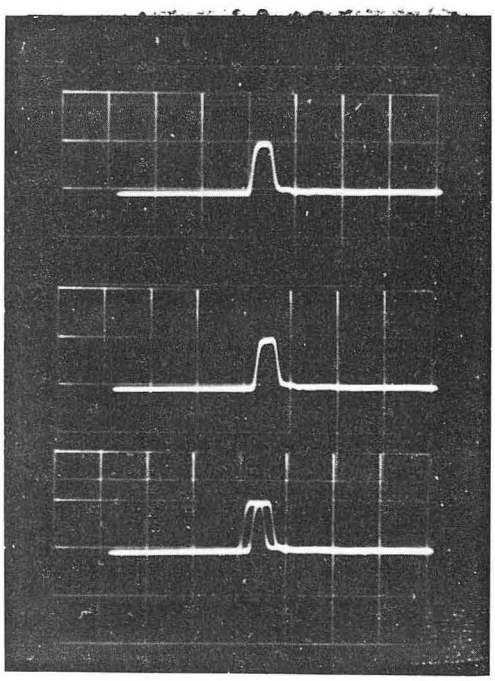

(A) Transmitted pulse, minimum delay.

(B) Transmitted pulse, maximum delay.

(C) Superposition of (A) and (B).

Vertical 18 volts/cm.
Horizontal 10^{-8} sec./cm.

Fig. 3 Delay Characteristics

File No. CC 2-6B (1)
C. N. Winningstad
Rev. May 28, 1964
L. Wagner

Lawrence Radiation Laboratory, University of California, Berkeley

COUNTING NOTE

NANOSECOND - PULSE TRANSFORMERS, ATTENUATORS, AND TERMINATORS

I. ABSTRACT

The combination of high-frequency response and good sensitivity inherent in most nuclear instrumentation equipment gives rise to the need for close attention to impedance matching between various units and to terminating coaxial cables. The variety of impedance discontinuities encountered can usually be eliminated by the use of pulse transformsers, attenuators, and/or terminators. The type of matching most appropriate in a given circumstance will depend upon considerations and possibly compromises involving relative energy transfer, range of frequencies involved and available signal levels.

This note describes a variety of pulse transformers, terminators, and attenuators in use at LRL, Berkeley.

II. CHARACTERISTICS

A. Pulse Transformers

Impedance-matching transformers serve to inter-connect transmission lines of differing impedance with maximum energy transfer and small reflection. These transformers do not invert the polarity of the pulse being transmitted. In general, the two connectors of the assembled transformer are different; each being characteristic of the impedance into which it is to be connected. One connector is male and the other female, such that it can be inserted with ease even into an existing set up -- either connector may be used as input or output (see Fig. 1).

Inverting transformers are designed to be placed into systems of identical impedance where it is desired to invert the polarity of the pulse. The two connectors are of the same series -- one male and the other female. Either connector may be used as input or output (see Fig. 1).

The electrical characteristics of pulse transformers are outlined in detail in Table 1. In brief, they have rise-times of about 1/2 nanosecond, approximately 1/2 μsec magnetizing time-constant when terminated with the impedance indicated and less than 5% insertion loss and reflection coefficient in a 1 nsec system. About 2% saturation of the core occurs with a 5 volt-μsec (volts x pulse duration) pulse.

As with any coaxial system, those systems using transformers should be terminated properly if reflections are to be avoided. Since the transformer is basically an inductor, it displays a "differentiating" time-constant behavior-related to the particular impedance it is being used with. This reactive nature causes response peculiarities associated with pulse rise-time, pulse duration, and pulse repetition rate -- these items are discussed in the Theory and Application section of this note.

B. Uni-direction and Bi-direction Matching Units

These are impedance-matching resistive networks that properly terminate a coaxial line of one impedance when coupled through the matching unit to a line of a different impedance. By means of the matching unit, reflections at the junction of the two impedances are reduced to low values.

Two types of matching units are made, uni-directional matching units (UDM), which provide an impedance match at only one connector, and bi-directional matching units (BDM), which provide an impedance match at both connectors.

The disadvantage of matching units over transformers is that a power loss or attenuation is incurred. The advantage is that the response is constant down to zero frequency. The amount of attenuation is listed in its reciprocal form as voltage transmission coefficient in Table II. In general, the UDM units have lower attenuation than the BDM.

Capacitive or inductive reflection components are less than 2% of the original signal in a 1 nsec rise-time system. The maximum resistive reflection coefficient which arises because of the 5% tolerances of the resistors is listed in Table II.

1. Uni-direction Matched (UDM): Uni-directional matched units provide a low-reflection impedance match at only one of its two connectors when used as recommended. As an example, when a 125-ohm cable is connected to connector 2 of UDM1A, its 125-ohm impedance in parallel with the 82-ohm resistor R1, provides a 50-ohm input impedance at connector 1, thereby matching a 50-ohm cable. However, with a 50-ohm cable connected to connector 1, the input impedance at connector 2 is 50-ohms paralleled with 82-ohms, or 31-ohms, which does not match the 125-ohm cable. Thus, the uni-directional matched series is primarily designed to be used with signals traveling into connector 1 and out of connector 2 (left to right as the diagram is shown - accompanying Table II).

2. Bi-directional Matched (BDM): Bi-directional units provide a low-reflection impedance match at both of its connectors when cables of impedances Z_1 and Z_2 are connected respectively to connectors 1 and 2.

C. Non-matched Adapters (NM)

These provide convenient means of connecting coaxial cables having different types of connectors. If the two cables are not of the same impedance, reflections will occur at the adapter and the voltage transmission coefficient will be other than unity. The transmission and reflection coefficients for various combinations of impedances Z_1 and Z_2 are listed in Table IV.

D. Attenuators

These may be inserted into coaxial lines of the specified impedance to attenuate pulses. At either connector an impedance match to within 2% is provided for lines of the specified impedance. The same attenuation is obtained for signals traveling in either direction.

E. Terminators

These units contain one or more resistors to properly terminate coaxial transmission lines of the specified impedance Z. Capacitive or inductive reflections from the terminators are held to less than 2% in a 1 nsec rise-time system. Resistor values are held to within 2% of the figures quoted, therefore the resistive reflection coefficient is less than 1%.

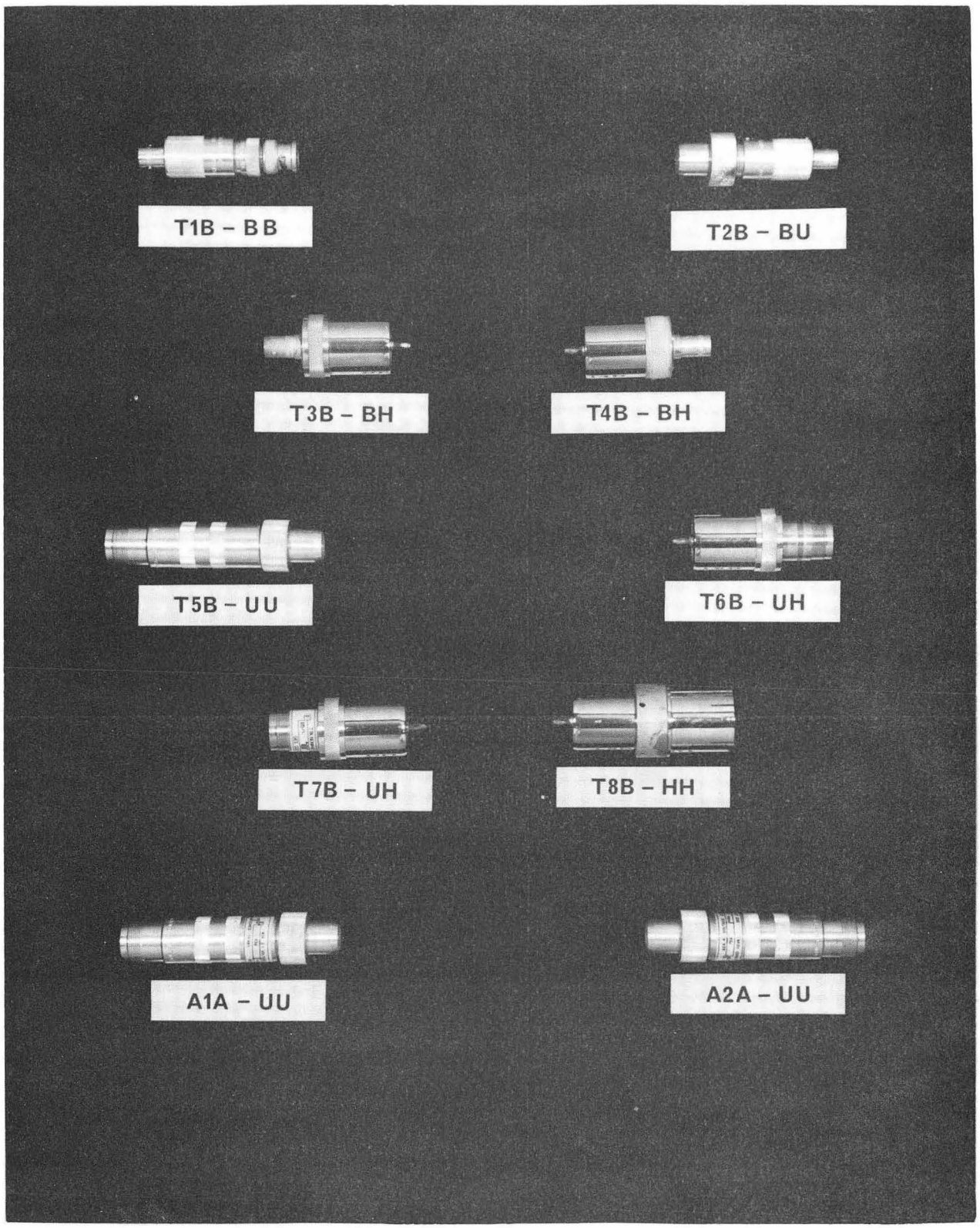

Fig. 1 - Some Transformers and Attenuators in use at LRL, Berkeley

TABLE I

NANOSECOND PULSE TRANSFORMERS

TYPE	DESIGNATION[1]	FUNCTION	INPUT IMPEDANCE[2] FEMALE	MALE		INSERTION DELAY
T1	T1B-BB	Inverting	BNC 50 Ω	BNC 50 Ω	Act-	0.7 ns
T2	T2B-BU	Impedance Match	BNC 50 Ω 48.8 Ω	UCRL 125 Ω 128 Ω	Nom- Act-	0.4 ns
T3	T3B-BH	Impedance Match	BNC 50 Ω 50 Ω	HP 200 Ω 200 Ω	Nom- Act-	0.6 ns
T4	T4B-BH	Impedance Match	BNC 50 Ω 53.6 Ω	HP 280 Ω 262 Ω	Nom- Act-	1.0 ns
T5	T5B-UU	Inverting	UCRL 125 Ω	UCRL 125 Ω	Act-	0.7 ns
T6	T6B-UH	Impedance Match	UCRL 125 Ω 124 Ω	HP 200 Ω 195 Ω	Nom- Act-	0.3 ns
T7	T7B-UU	Impedance Match	UCRL 125 Ω 124 Ω	HP 280 Ω 282 Ω	Nom- Act-	0.5 ns
T8	T8B-HH	Inverting	HP 200 Ω or 280 Ω	HP 200 Ω 280 Ω	Act- Act-	0.7 ns

[1]The B, as in T1B, indicates the electrical characteristics of the basic core and winding configuration (fractional nanosecond t_r and $\sim 1/2$ μsec magnetizing time-constant). Should changes be made in the basic transformer, succeeding letters would be used. A T1C, for example, would have electrical characteristics differing from those of the T1B - different rise-time and/or magnetizing time-constant that would not necessarily eliminate the usefulness of the T1B. The letters following the hyphen indicate connector types (female to male) according to the following abbreviations:

Connector Type	-	Abbreviation
BNC	-	B
UCRL	-	U
HP	-	H
N	-	N
GR	-	G

[2]With opposite end properly terminated into its nominal impedance. Non-, nominal - Act-, actual.

TABLE I

NANOSECOND PULSE TRANSFORMERS (Continued)

TYPE	RESPONSE Rise Time f_{3db}	Rise Time Upper	Droop Time f_{3db}	Droop Time Constant[3] Lower	REACTIVE[4] REFLECTION COEFFICIENT	PRINT NUMBER	COST[5]
	0.5 ns		740 ns		+13% F-M		
T1	700 Mc		215 kc		+13% M-F	14X1051	$ 6.80
	0.5 ns		510 ns		- 2% F-M		
T2	700 Mc		312 kc		- 3% M-F	14X1061	$ 7.20
	1.5 ns		740 ns		-25% F-M		
T3	230 Mc		215 kc		+10% M-F	14X1071	$ 6.80
	2 ns		1000 ns		+30% F-M		
T4	175 Mc		159 kc		+ 5% M-F	14X1081	$ 6.80
	0.5 ns		400 ns		+ 2% F-M		
T5	700 Mc		400 kc		+ 2% M-F	14X1091	$ 6.50
	0.5 ns		520 ns		-10% F-M		
T6	700 Mc		306 kc		- 8% M-F	14X1101	$ 7.60
	0.8 ns		520 ns		-15% F-M		
T7	440 Mc		306 kc		-10% M-F	14X1111	$ 7.60
	0.5 ns		410 ns		-30% F-M		
T8	700 Mc		388 kc		-30% M-F	14X1121	$11.10

[3] ±20% Due to manufacturers tolerance in permeability of core material.

[4] Transient reflection of pulse from Hg pulser detected in system with 0.35 nsec response. (This reflection is minimized and is in most cases negligible when incident pulse has a 1 nsec or longer rise-time.) F-M and M-F notation indicates direction of incident pulse; i.e., F-M indicates incident pulse enters the female end of the transformer and exits the male end.

[5] When ordered in substantial quantity.

TABLE II

UNI- and BI-DIRECTIONAL IMPEDANCE-MATCH ADAPTERS

(Uni-directional units provide an impedance match at connector 1 only.)

Voltage Transmission Coeff. #1 = E_2/E_1 ▶

Voltage Transmission Coeff. #2 = E_1/E_3 ◀

Arrows Indicate Direction of Signal Travel

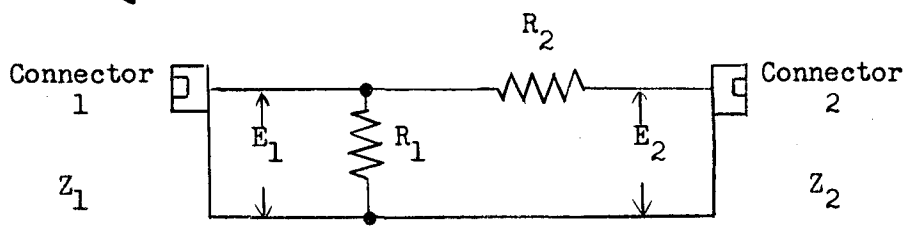

Designation	Connector 1 Z_1 Type	Connector 2 Z_2 Type	R_1 Ohms	R_2 Ohms	Voltage Transmission Coeff. #1[7]	Voltage Transmission Coeff. #2[8]	Max. Voltage Reflection[9] #1	Max. Voltage Reflection[9] #2
UDM1A	50 Ω N Female	125 Ω UCRL Female	82	0	1.0	0.4	.012	-0.60
UDM2A	50 Ω N Female	200 Ω HP Male	68	0	1.0	0.25	.026	-0.75
UDM3A	125 Ω UCRL Female	50 Ω N Female	0	75	0.4	1.60	.016	0.61
UDM4A	125 Ω UCRL Female	200 Ω HP Male	330	0	1.0	0.3	.013	-0.37
BDM1A	50 Ω N Female	125 Ω UCRL Female	62	100	0.56	0.22	.033	.032
BDM2A	125 Ω UCRL Female	200 Ω HP Male	200	120	0.63	0.39	-.028	- .026
BDM3A	50 Ω N Female	200 Ω HP Male	56	180	0.5	0.13	-.037	.04

Values of voltage transmission and reflection coefficients are quoted under conditions that cables of impedances Z_1 and Z_2 are connected respectively to connections 1 and 2.

[7] Ratio E_2/E_1 for signal traveling from left to right in diagram.

[8] Ratio E_1/E_3 for signal traveling from right to left in diagram where E_3 is signal voltage applied to input of cable of impedance Z_2.

[9] Worst case with resistors of 5% tolerance.

General Equations Determining R_1 and R_2

UDM Series:

For $Z_1 > Z_2$, $R_2 = (Z_1 - Z_2)$; $R_1 = \infty$

For $Z_1 < Z_2$, $R_1 = \dfrac{(Z_1 \quad Z_2)}{(Z_2 - Z_1)}$; $R_2 = 0$

BDM Series: $(Z_1 < Z_2)$

$$R_1 = \frac{Z_1}{\sqrt{1 - Z_1/Z_2}}$$

$$R_2 = Z_2\sqrt{1 - Z_1/Z_2}$$

TABLE III

NON-IMPEDANCE-MATCHED ADAPTERS

DESIGNATION	CONNECTOR 1	CONNECTOR 2
NM1	UHF Male	UCRL 125 Ω Male
NM2	UHF Male	UCRL 125 Ω Female
NM3	UHF Female	UCRL 125 Ω Male
NM4	UHF Female	UCRL 125 Ω Female
NM5	UCRL 125 Ω Male	HP Male
NM6	UCRL 125 Ω Female	HP Male
NM7	UHF Male	HP Male
NM8	UHF Female	HP Male
NM9	UCRL 125 Ω Male	Type N Female
NM10	UCRL 125 Ω Female	Type N Female

TABLE IV

Voltage reflection and transmission coefficients at junctions of coaxial cables of differing impedances.

Voltage transmission coeff. →
Arrow indicates direction of signal travel.

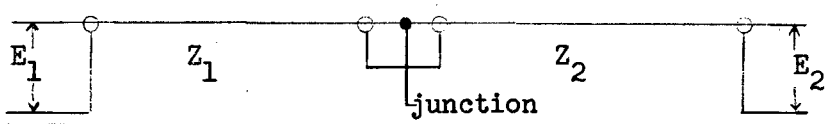

Z_1	Z_2	Voltage Trans. Coeff.[10]	Voltage Reflection Coeff.[11]	Z_1	Z_2	Voltage Trans. Coeff.[10]	Voltage Reflection Coeff.[11]
50	125	1.43	0.43	185	50	0.43	-0.57
50	170	1.54	0.54	185	125	0.81	-0.19
50	185	1.57	0.57	185	170	0.96	-0.04
50	200	1.60	0.60	185	200	1.04	0.04
125	50	0.57	-0.43	200	50	0.40	-0.60
125	170	1.15	0.15	200	125	0.77	-0.23
125	185	1.15	0.15	200	170	0.92	-0.08
125	200	1.23	0.23	200	185	0.96	-0.04

10 $\dfrac{2\,Z_2}{(Z_1 + Z_2)}$

11 $\dfrac{(Z_2 - Z_1)}{(Z_2 + Z_1)}$

TABLE V

ATTENUATORS

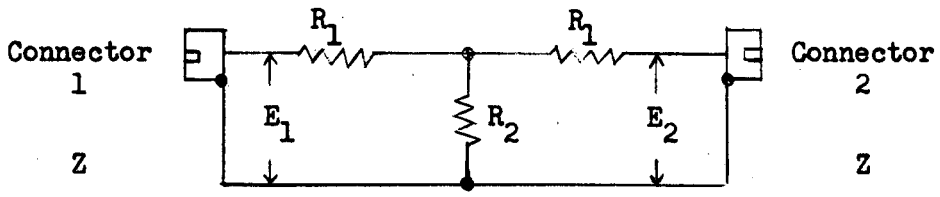

DESIGNATION	Z	VOLTAGE ATTENUATION, $A = E_1/E_2$	CONNECTOR 1	CONNECTOR 2	R_1	R_2
A1A	125	2 (6 db)	UCRL Female	UCRL Male	43	160
A2A	125	4 (12 db)	UCRL Female	UCRL Male	75	68

* With cables of impedance Z connected to both connectors.

Design formulas for other Z's and A's.

$$R_2 = \frac{2AZ}{(A^2 - 1)} \; ; \quad R_1 = Z \; \frac{(A - 1)}{(A + 1)}$$

TABLE VI

TERMINATORS

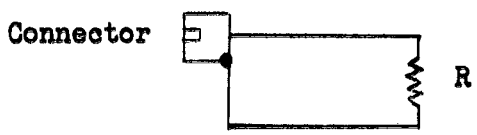

DESIGNATION	TO TERMINATE CABLES OF Z	CONNECTOR	R
X1	50,51,52	N Female	51
X2	125	UCRL Male	125
X3	125	UCRL Female	125
X4	197,200	HP Male	200
X5	50,51,52	BNC Male	51

III. THEORY AND APPLICATION

A. Pulse Transformers

The pulse transformers described in this note have rise-time response characteristics of sufficient quality that no special precautions against ringing, reflection, or feedthrough are necessary when using them with pulses of 1 nsec or longer rise-time. These characteristics are realized by virtue of the response of the Ferroxcube Type 102 cores used and very careful attention to specified winding geometry. Appreciable reflections can be detected in a 0.35 nsec system as indicated in the Reactive Reflection Coefficient column of Table I.

A more serious consideration in the use of these transformers is the effect of the low-frequency response of the transformer. The following equivalent circuit will serve as a reminder of the basis of the low-frequency behavior:

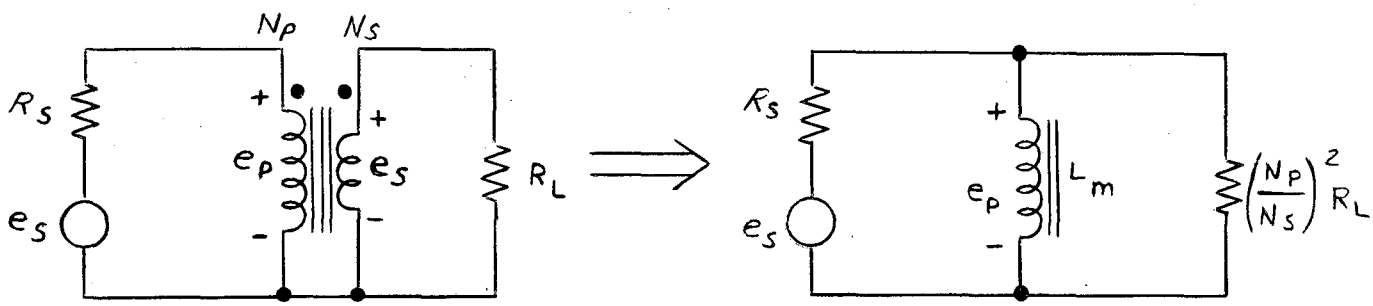

The equivalent circuit on the right has a "differentiating" or "droop" time constant,

$$= \frac{L_m}{R'} \quad . \qquad \text{Where } R' = R_s // \left(\frac{N_p}{N_s}\right)^2 R_L$$

For these transformers: $L_m = 0.44 \times 10^{-6} \times N_p^2$ henries.

$R_s = Z_{input}$ Cable

$R_L = Z_{output}$ Cable

(Each properly terminated)

The response of a differentiating circuit is pulse length, repetition rate, and pulse rise-time dependent -- including ramifications due to combinations of these factors.

Fig. 2 indicates the droop that would occur in e_p (equivalent circuit above) were e_s to be a pulse of approximately one time-constant duration. The overshoot below the initial base line is significant and is the cause of the repetition rate sensitivity (envelope droop) apparent in the photograph of Fig. 3. The exponential decay of the envelope in Fig. 3 shows that the rep-rate sensitivity problem is predictable for a burst of pulses with uniform spacing. However, with random events the problem is more severe.

Fig. 4 is a photograph of a single trace which is displaying a gated burst of randomly spaced pulses. Fig. 5 is a multiple trace exposure of the same condition -- it too is predictable, but only on an average basis with random extremes far outside the excursion of the fixed burst rate of Fig. 3. The photograph of Fig. 6 displays a similar circumstance when the pulses are of a considerably narrower width, thereby diminishing the degree of envelope droop.

The multiple exposure photograph of Fig. 7 displays the effect of input pulse rise-time on output pulse peak amplitude. The photograph is comparison of three pairs of input-output comparisons. Each pair has a common initial rate of rise, but the output quickly droops off in each case while the inputs all rise to the 4 cm level, each at its own rise-time. Since the same circuit (differentiating time-constant) applies to all three pairs, the varying outputs in the three cases are attributable to the differing rise-times of the inputs. An exponential type rise-time is used for this illustration and for a graph which follows. The output pulse reaches its maximum value before the 90% point on the input pulse, which results in this approximation being independent of the input pulse width, provided the leading edge has the exponential rise characteristic.

Figures 8 and 9 make it possible to determine at a glance if low-frequency response problems are likely to be troublesome in a given situation. In order to use these graphs, it is necessary to know only the pulse shapes involved (usually known for p.m. tube bases or electronic circuits), circuit time constant (Droop Time Constant under Response column in Fig. 1), and an estimate of the average frequency within the burst of the pulse source.

From Fig. 8, the peak output amplitude can be established as a function of the rise-time of the input pulse. From Fig. 9, the possibility of envelope droop as a function of input pulse width and the average frequency within the burst can be determined.

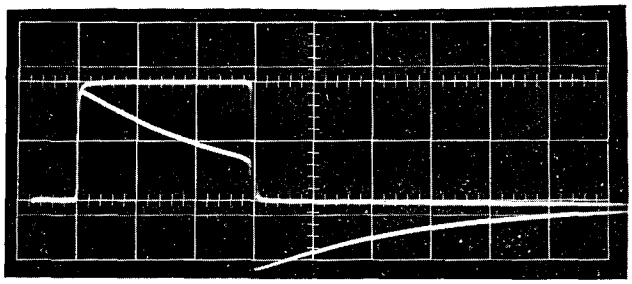

Sweep: 200 nsec/cm
Sens: 1 V/cm
Pulse Width: 600 nsec
Droop Time Constant of
Transformer: 600 nsec

Fig. 2

Droop Characteristic
of Pulse Transformer

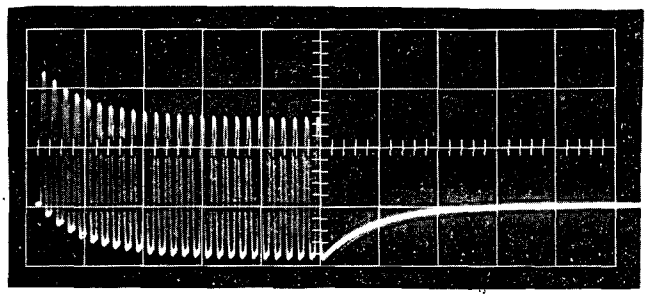

Sweep: 500 nsec/cm
Sens: 2 V/cm
Pulse Width: 40 nsec
Pulse Rep. Rate: 10 mc
Droop Time Constant of
Transformer: 450 nsec

Fig. 3

Envelope Droop Due to Transformer
For Uniformly Spaced Pulses

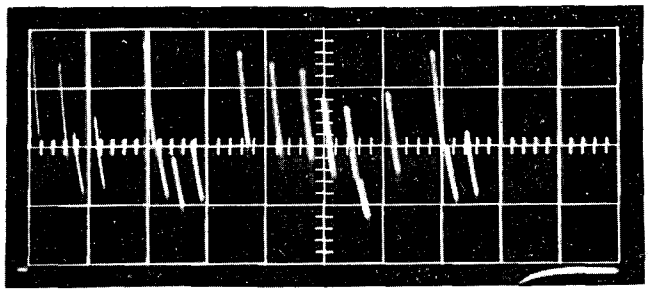

Sweep: 2 μsec/cm
Sens: 250 mV/cm
Pulse Width: 400 nsec
Pulse Rep. Rate: 830 kc Random
Droop Time Constant of
Transformer: 600 nsec

Fig. 4

Effect of Transformer Droop
On Randomly Spaced Pulse

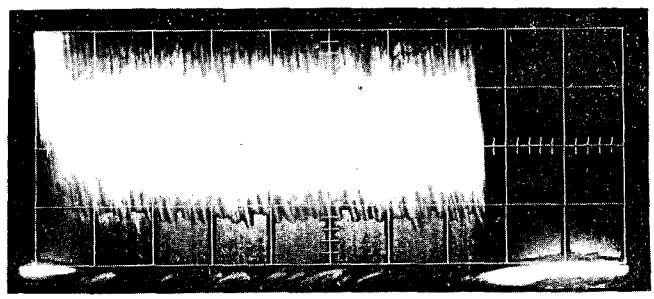

Sweep: 2 μsec/cm
Sens: 250 mV/cm
Pulse Width: 400 nsec
Pulse Rep. Rate: 830 kc Random
Droop Time Constant of
Transformer: 600 nsec

Fig. 5

Envelope Droop On Successive Bursts
Of Randomly Spaced Pulses

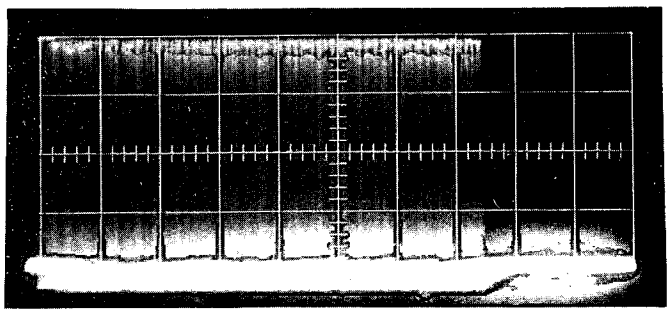

Sweep: 2 μsec/cm
Sens: 250 mV/cm
Pulse Width: 50 nsec
Pulse Rep. Rate: 1 mc Random
Droop Time Constant: 600 nsec

Fig. 6

Envelope Droop On Successive Bursts Of Randomly Spaced Narrow Pulses

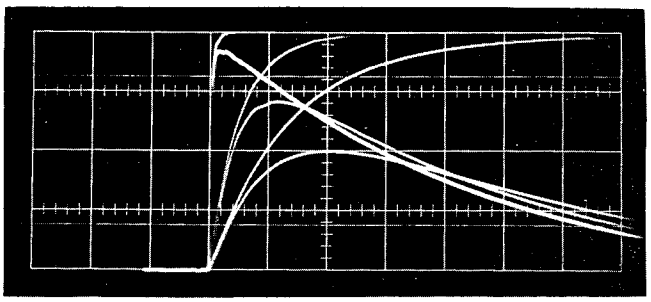

Sweep: 200 nsec/cm
Sens: 1 V/cm
Input t_r: 25 nsec, 220 nsec, 550 nsec
Droop Time Constant: 600 nsec

Fig. 7

Effect of Input Pulse Rise Time On Output Amplitude

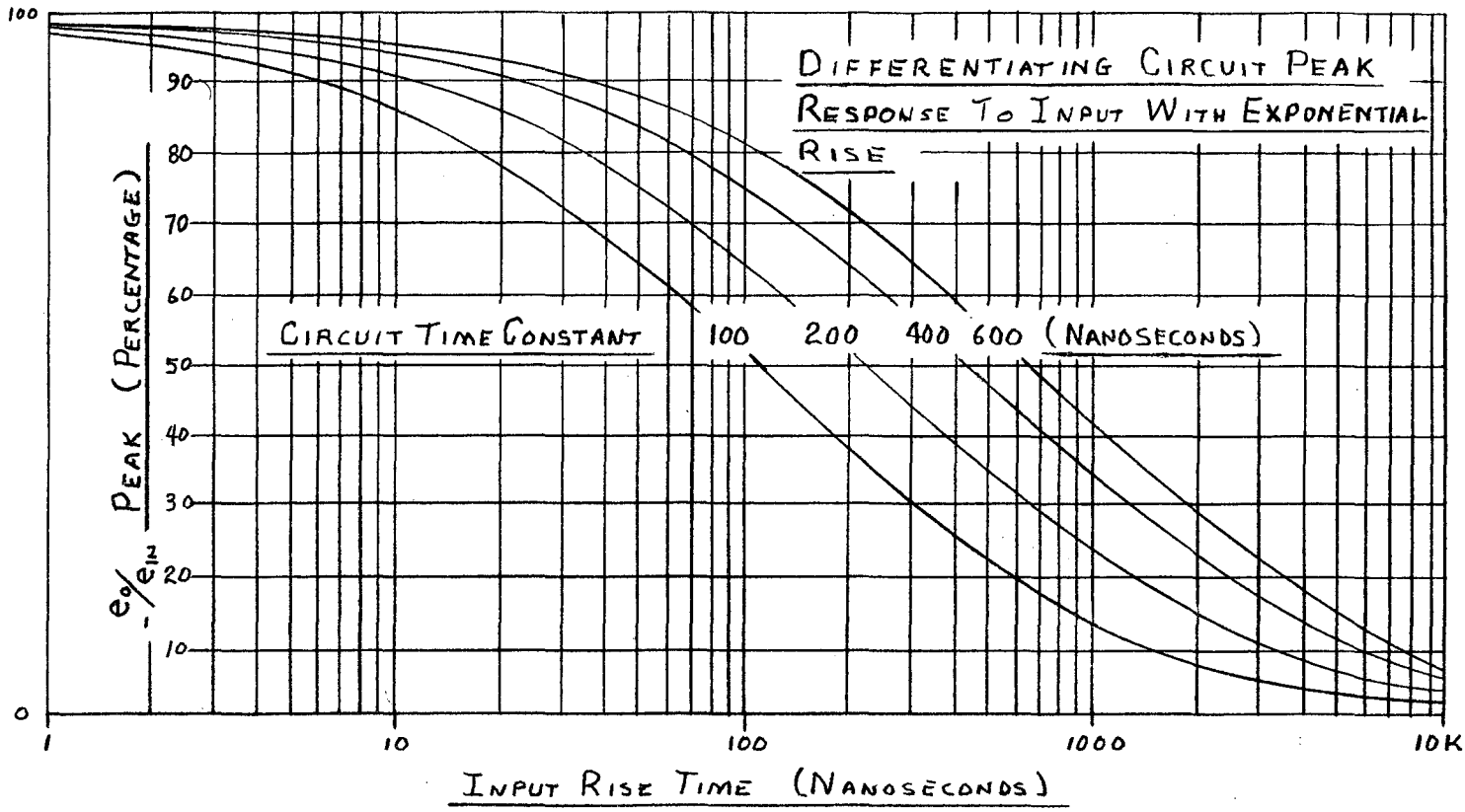

Fig. 8 - Peak Output Voltage as a Function of Input Pulse Rise Time for Several Droop Time Constants.

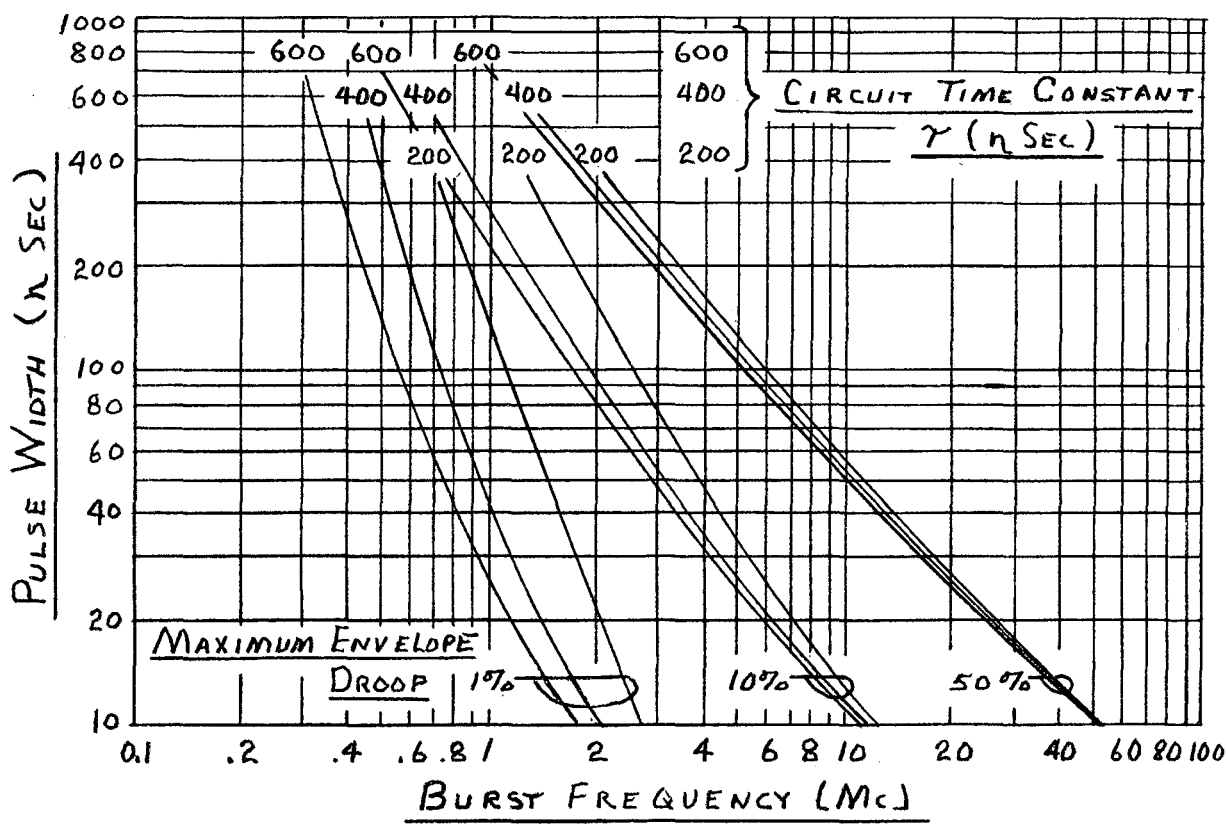

Fig. 9 - Envelope Droop (See Fig.'s 3 & 5) As A Function of Both Average Frequency Within The Burst and Pulse Width - For Three Droop Time Constants.

B. Signal Transmission

Fig. 10 summarizes the signal transmission characteristics specified in the earlier tables. Since the various other coupling methods (Direct, UDM and BDM of Fig. 10) do not have low-frequency response problems, they may sometimes be preferred to the transformer for coupling between systems of differing impedance. Notably, the straight-through method usually gives close to the same transmitted signal as the transformer -- however, it usually results in a large reflection which must be back-terminated to avoid multiple pulsing. The specific circumstances will allow one to decide which method of coupling to use.

C. Attenuators

When the load impedance driven by A1A and A2A attenuators is something other than the intended 125 ohms, the attenuation likewise varies from the intended 2:1 and 4:1. For the usual case where a slight mismatch is encountered, a -2/1 relationship (% impedance mis-match/% deviation in attenuation) exists.

A +2% impedance mis-match thereby results in a -1% deviation in attenuation. This relationship is practical (within a percent) for impedance mis-matches up to 10%.

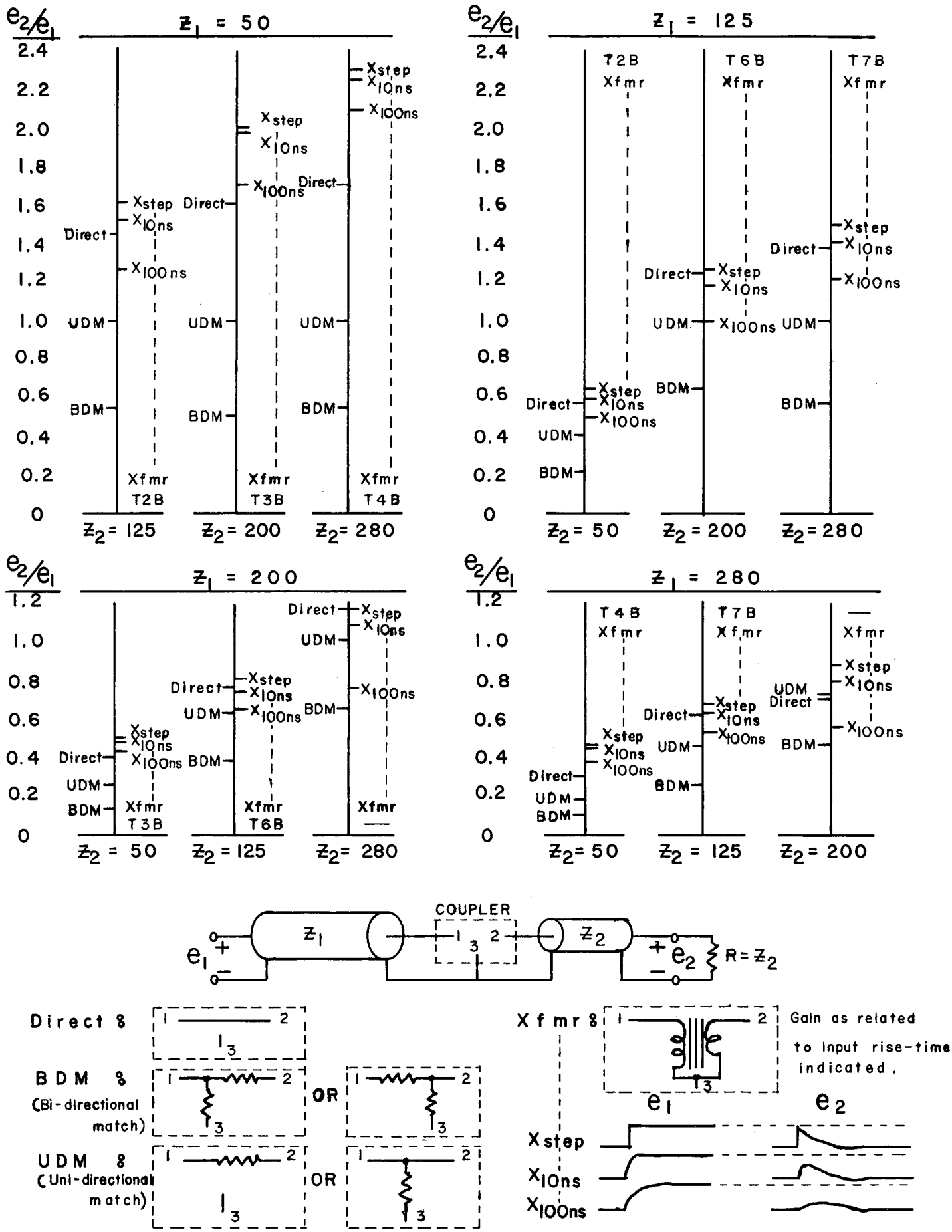

Fig 10. VOLTAGE GAIN OF COUPLING METHODS

File No. CC 3-5B (1)
D. A. Mack, J. Mey
Rev. March 11, 1964
D. L. Wieber

Lawrence Radiation Laboratory, University of California, Berkeley

COUNTING NOTE

RADIATION LABORATORY AMPLITUDE DISCRIMINATORS

Units at this Laboratory which are called amplitude discriminators can be divided into two general catagories, those used primarily for pulse shaping and timing applications and those used for amplitude analysis.

Discriminators to be used for pulse shaping should ideally produce output pulses of uniform amplitude and shape for any input signal above the threshold level for wide ranges of input amplitude, shape, frequency, duty factor, and ambient temperature. Those to be used for timing should have the additional features of low charge sensitivity and minimum variation in insertion delay under all operating conditions.

Discriminators to be used for pulse-height analysis require a higher order of threshold stability and linearity while speed and delay-variation requirements are much less severe.

DLW:mt

TABLE I

TITLE	DRAWING NUMBER	PANEL HEIGHT	SYSTEM	DESIGNER	THRESHOLD		INPUT		OUTPUT		PRIMARY APPLICATION
					Range V	Stability mV/°C	Max. Rep. Rate pps	Min. Pulse Width ns(1)	Ampl. V	Width ns	
Pulse-Amp. Disc. Mod 2	3X8654	5-1/4"	3X3744	Jackson	+0.1 to +1.1	1	10^7	25	+6	40	5 Mc Scaler Driver
Pulse-Amp. Disc. Mod 3	3X9994	3-1/2"	3X9974	Jackson	"	"	"	"	"	"	" "
10 Mc Disc.	11X1091 P-1	7"	11X1090 P-1	Wieber	+0.1 to +11(2)	0.5	10^7	5	2.5	25	10 Mc Scaler Driver
	11X1091 P-2	5-1/4"	(5)	"		"	"	"	"	"	
Constant Delay	4X9963	5-1/4"	(5)	Acker	-0.1 to -0.6	-0.4	$2x10^7$	5	-1.0	(3)	Timing
Tunnel Diode Bridge	4X1112-18C	5-1/4"	(5)	Nunamaker	-0.1 to -2	-	10^5	5	±5	500	Timing
Tunnel Diode Bridge	4X1112-17	5-1/4"	(5)	A. Bjerke	-0.1 to -2	-	$2x10^7$	5	-0.3	20	Timing
Tunnel Diode Bridge	4X1112-10B	5-1/4"	(5)	Nunamaker	-0.1 to -2	-	$2x10^7$	5	+.07	6	Timing
Single Channel Analyzer	11X1021 P-1	7"	11X1981 P-1	Landis, Goulding	.2 to 10	0.2	$5x10^5$	50	5	200	Amplitude Analysis

(1) The minimum pulse width is defined as that for which the threshold increases to 10% above its low frequency value.

(2) By means of a helipot and X10 attenuator switch.

(3) Determined by inductor in second Tunnel Diode stage. Minimum width 8 ns (FWHM).

(4) Strobe pulse required. This is usually the crossover pulse from Double Delay line signal.

(5) Nanobox bins 18X1023 W-1 or 5X7813 with ±12 and ±24 VDC supplies as per EET-861.

File No. CC 3-10A (1)
H. G. Jackson
Rev. December 15, 1963
E. W. Pullen

Lawrence Radiation Laboratory, University of California, Berkeley

COUNTING NOTE

DUAL 3 CHANNEL POSITIVE INPUT COINCIDENCE AND ANTI-COINCIDENCE UNIT MODEL 3

I. SUMMARY

This unit is a transistor version of the Model 2 coincidence and anti-coincidence unit, and reference should be made to Counting Note CC 3-9A regarding the detail of the operation of this type of coincidence circuit.

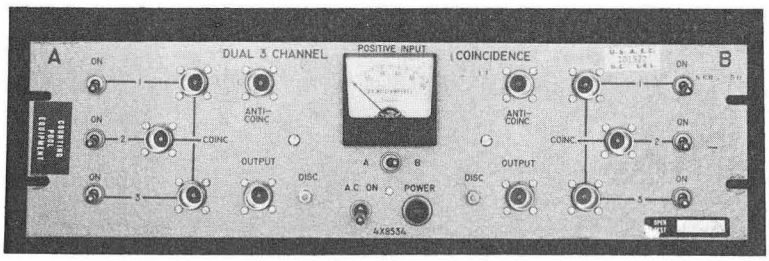

Fig. 1 - Coincidence Unit Front View

II. SPECIFICATIONS

A. Inputs.

1. Three channel coincidence, positive pulses*, 3.0 V > E in > 0.25 V.
2. One channel anti-coincidence, positive pulses, 3.0 V > E in > 1.0 V.
3. Impedance = 125 ohms.

B. Outputs.

1. 300 millivolts negative for 250 millivolt input pulses with 5 ns clipping (double delay time, $2\frac{1}{2}$ ns long line).
2. 600 millivolts negative for clipping greater than 10 ns.
3. Pulse width determined by clipping lines.**
4. Output impedance from emitter follower about 20 ohms. Emitter load resistor = 125 ohms.
5. Time delay input to output is about 4 ns.

C. Sigma pulse width about 5 ns.
Coincidence time about 4 ns.

*Earlier models of this unit employed inverting pulse transformers in the coincidence inputs for operation with negative pulses.

**Clipping time = 2 X electrical length of line.

D. Coincidence ratio > 10:1 for 5 ns clipping with 0.25 volts input.

E. Maximum repetition rate 10 Mc with constant output amplitude.

F. Adjustments and controls (per chassis).

1. Power ON-OFF switch (for both circuits).
2. ON-OFF switch for each coincidence channel (no switching for anti-coincidence).
3. Discriminator potentiometer adjusts bias on discriminator diode for optimum coincidence ratio. This is located on the front panel and there is one for each circuit.
4. A - B switch and meter (0 - 100 ma) allows the collector current of each limiter transistor to be read directly, and also gives an indication of the operating condition of the unit. The collector current should be adjusted to 20 ma ± 4 ma with the trim potentiometer provided in the circuit. Adjustment is described in UCLRL Drawing No. 4X9151. A and B refer to the left and right circuits respectively.

G. Power requirement (per chassis).

1. 115 volts, 60 cycles, 16 W.

III. CIRCUIT DESCRIPTION

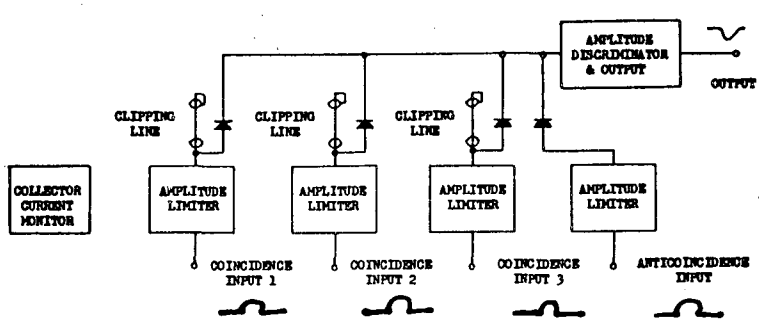

Fig. 2 - Coincidence Unit Block Diagram

Positive input pulses of 0.25 volts cut-off (limit) the current in the limiter transistors, and a voltage pulse of at least 1 V is available at the collector to reverse bias the coincidence diodes. When all conducting coincidence diodes have been reversed biased, current is allowed to flow in the base circuit of the output emitter follower. The transistors used are Motorola 2N1143,* and the diodes, Q-6-100.

IV. OPERATION

115 V 60 cycles must be applied by a twist-lock connector. The appropriate input cables must be connected and the channels switched on. The resolution time is determined by the length of the clipping lines. They

*$f_T \geq 400$ MCS.

are attached on the back using UCRL 125 ohm connectors. When only two channels are being used, clipping lines must still be attached on all three channels. A rear view of the unit is shown in Fig. 3.

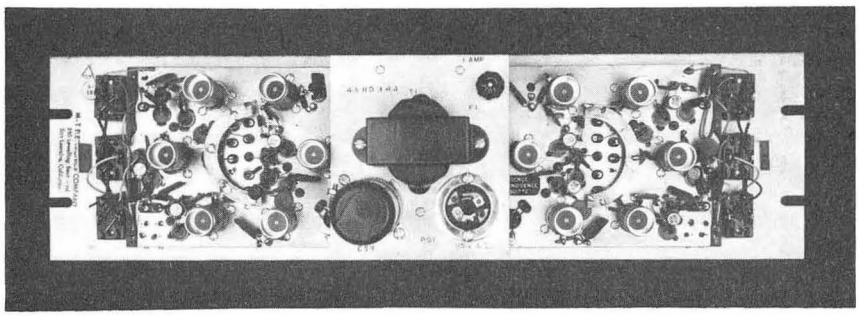

Fig. 3 - Coincidence Unit Rear View

V. PERFORMANCE TESTS

A. Coincidence Time.

The coincidence time of the unit was measured by feeding a 0.25 volt 120 ns wide pulse from an HP 215 Pulse Generator ($t_{rise} \sim .8$ ns) to each input. The length of the clipping lines was then shortened until the output amplitude was 50% of the output level for long clipping lines. A typical double delay time is about 5 ns. Fig. 4(a) shows a plot of this relation. Then with 2.5 ns long clipping lines, one input signal was delayed until the output amplitude decreased a further 50%. This delay time is defined as the coincidence time, and is typically about 4 ns. Fig. 4(b) shows a typical delay characteristic.

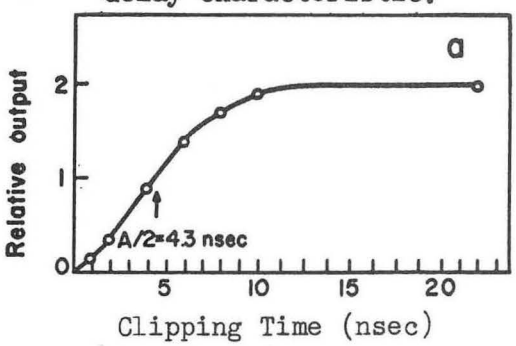

Fig. 4(a)

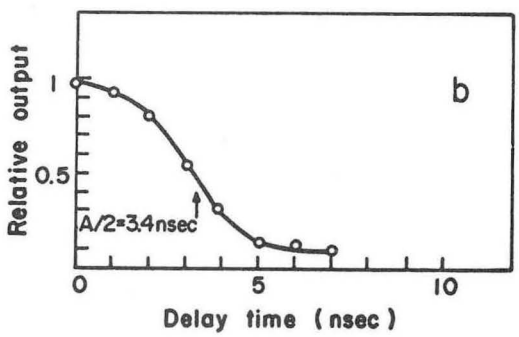

Fig. 4(b)

Fig. 4 - Output Amplitude as a Function of:

(a) Clipping Time: E_{IN} = 0.25 V at 120 ns, threefold coincidence

(b) Delay Time: E_{IN} = 0.25 V at 120 ns, clipping time = 5 ns, three fold coincidence.

B. Coincidence Ratio.

The ratio of the output amplitude with signals fed to each input as described above and with one input removed, is defined as the coincidence ratio. It is always greater than 10:1.

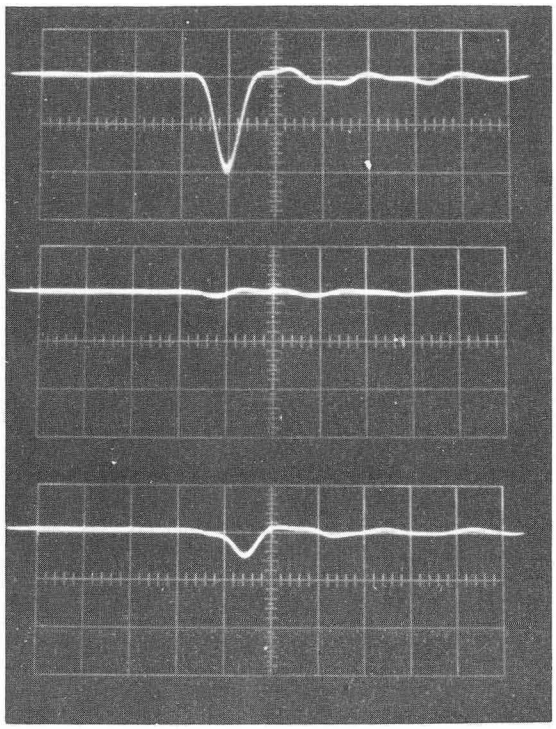

(a) Twofold coincidence.

(b) One input signal.

(c) Delay of 5 ns in one channel. Horizontal sweep, 10 ns/cm; vertical, 0.1 V/cm; input pulse, 10 ns; clipping time 5 ns; repetition frequency 10^5 pps.

Fig. 5 - Output Signals

C. Anti-coincidence Resolution Time.

A typical anti-coincidence resolution curve is shown in Fig. 6. The anti-coincidence pulse was advanced and delayed with respect to the coincidence signals. Notice that the minimum amplitude was about 5% of the original, and that it was essentially obtained with the anti signal in time coincidence with the signal inputs.

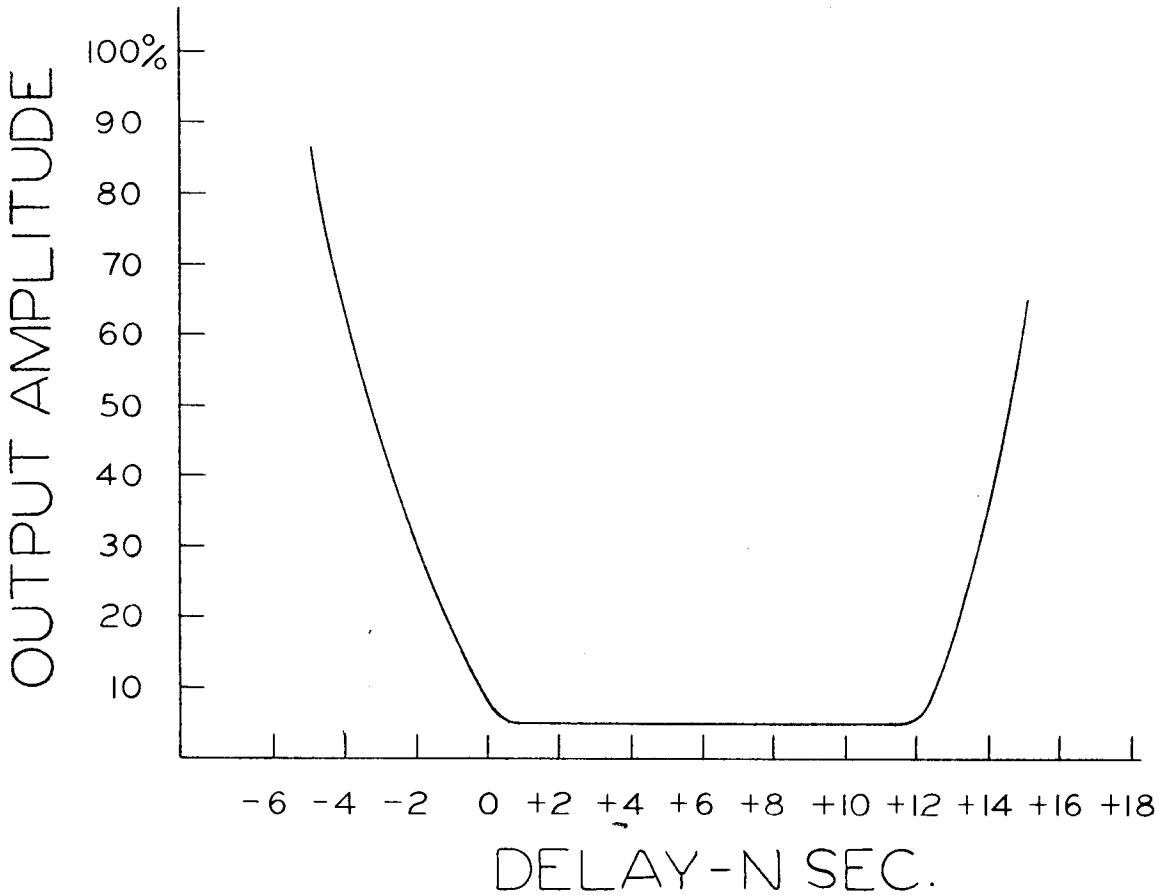

Fig. 6 - Anti-coincidence Resolution.

Input pulse 1 V at 18 ns; clipping time 5 ns; repetition frequency 60 pps.

D. Effects of High Repetition Rates.

A curve showing the change in the output pulse amplitude with various input repetition rates is shown in Fig. 7. It will be noted that the maximum continuous repetition rate is, for practical purposes, about 25 Mc. For repetition rates below 10 Mc, the Nanosecond Pulse Generator was used with 20 ns clipping lines. Above 10 Mc, the Hewlett-Packard 608A oscillator was utilized, with the output amplified and limited by means of a H. P. 460A and 460B amplifier. The output of the 460B was then attenuated to the required amplitude.

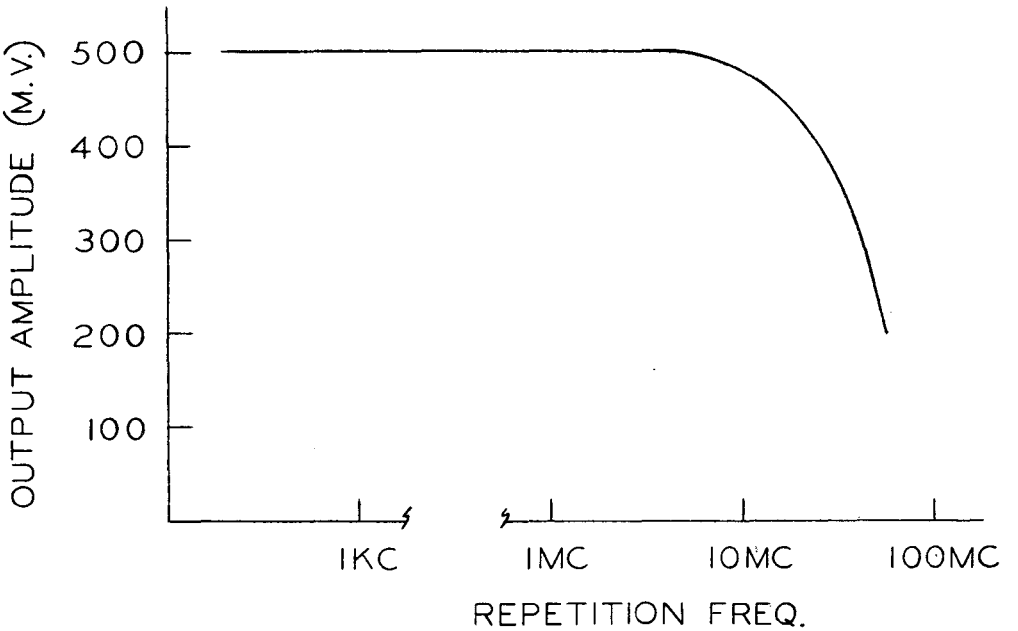

Fig. 7 - Output Amplitude vs. Repetition Frequency.
Input Pulse 0.5 V at 20 ns; clipping time 5 ns.

Fig. 8 shows the double pulse resolution time of the unit. Here a UCRL Hg. Pulser was used at 60 pps. The double pulse resolution is about 20 ns.

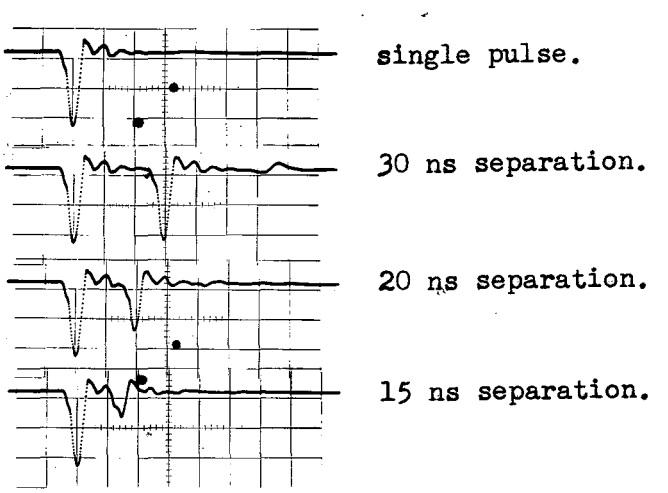

Fig. 8 - Double Pulse Resolution.
Input pulse, 0.5 V at 8 ns; clipping time, 5 ns; repetition frequency 60 pps.
Horizontal sweep, 10 ns/cm; vertical 0.2 V/cm.

E. Coincidence Resolution Curve.

A test was made to determine the resolution time of the unit operating in a two-fold coincidence system. Two 6810A photomultiplier tubes were illuminated by a pulsed mercury light source. The pulse repetition frequency was 60 pps. Phototube signals were fed directly to the coincidence unit. The output signal was amplitude discriminated and the resultant output was counted on a scaler.

Fig. 9 shows a typical time resolution curve of one unit. Notice that on the sides of the curve the counting rate drops about a factor of 100 for 1 ns increase in delay.

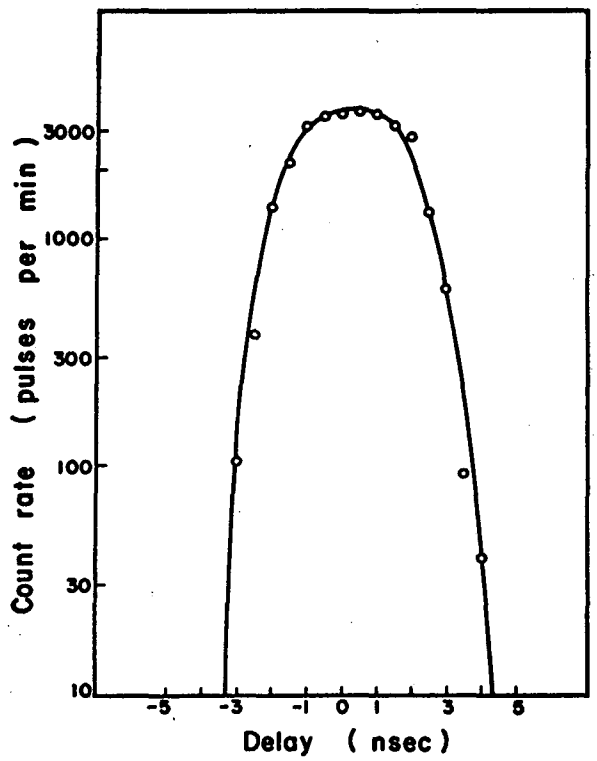

Fig. 9 - Resolution Time of Coincidence Circuit.

Pulsed mercury light source; light level 1850 photons at photocathode of two 6810A photomultipliers.

REFERENCES

1. Counting Note CC 3-9 , Fast 3 Channel Coincidence and Anti-Coincidence Unit.

2. Transistor Counting Systems for Scintillation Detectors, Baker, etc. UCRL 9000 February 17, 1960, also IRE Trans. on Nuclear Science, Vol. NS-7, June-September, 1960.

3. Schematic 4X8533.

4. Checkout and Adjustment Procedure - 4X9151.

5. Negative input model 3X6873

EWP:mt

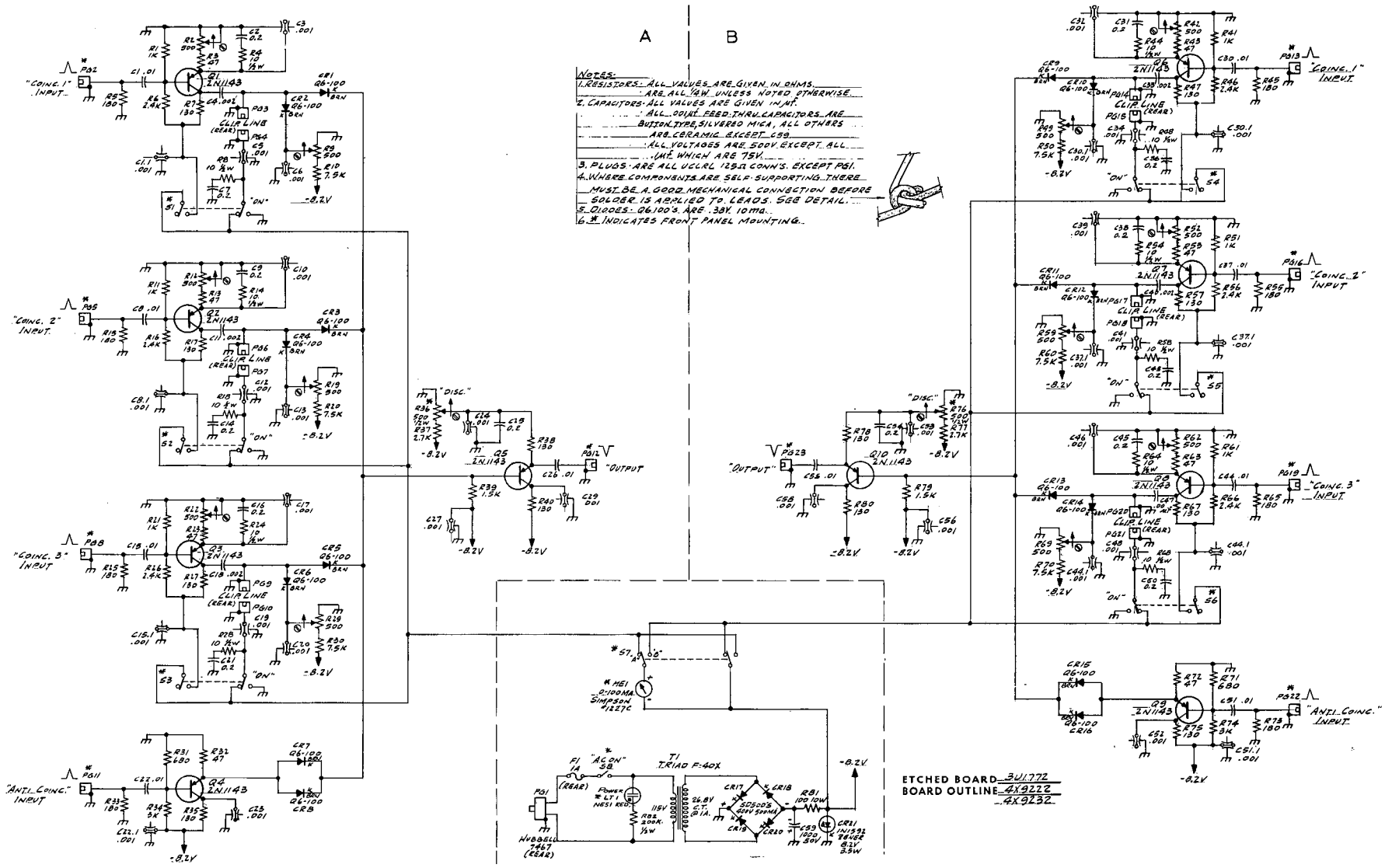

Fig. 10 - Schematic Circuit Diagram

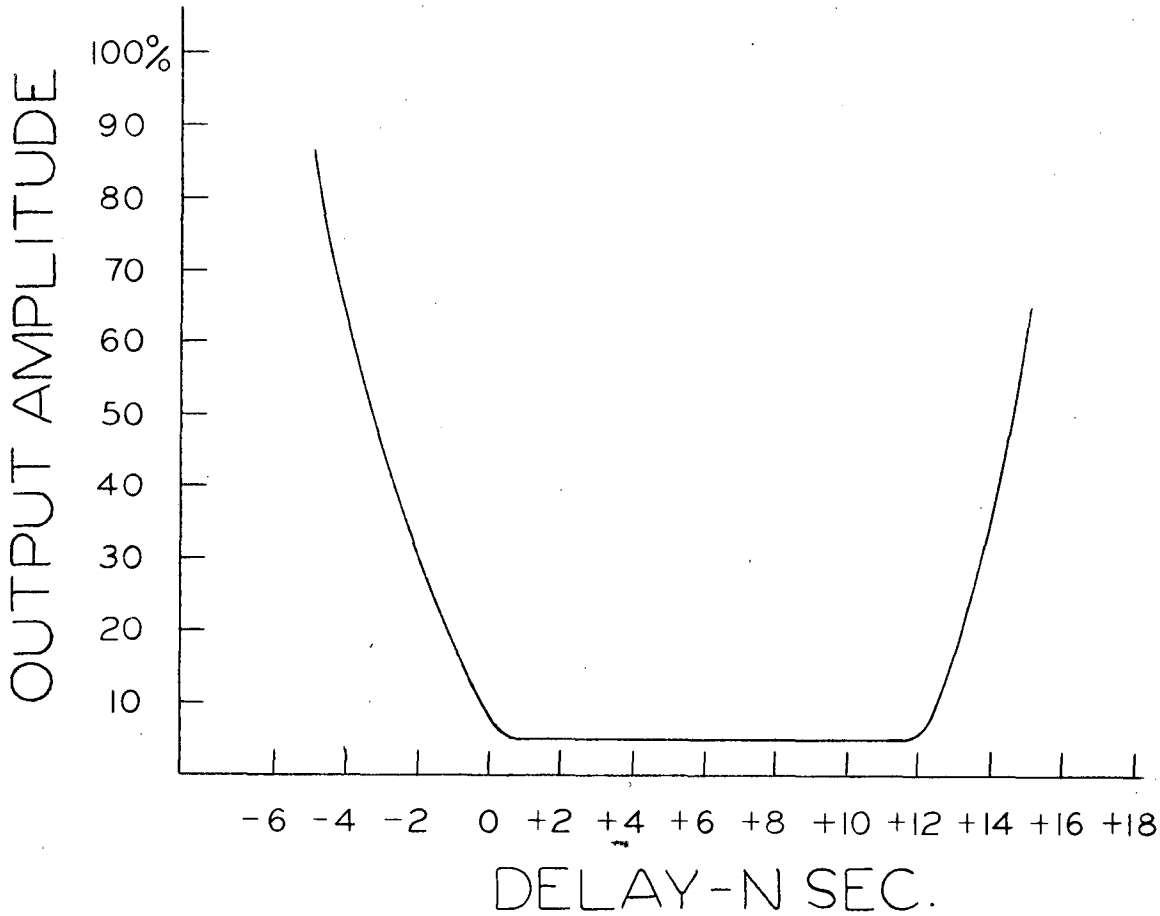

Fig. 6 - Anti-coincidence Resolution.

Input pulse 1 V at 18 ns; clipping time 5 ns; repetition frequency 60 pps.

D. Effects of High Repetition Rates.

A curve showing the change in the output pulse amplitude with various input repetition rates is shown in Fig. 7. It will be noted that the maximum continuous repetition rate is, for practical purposes, about 25 Mc. For repetition rates below 10 Mc, the Nanosecond Pulse Generator was used with 20 ns clipping lines. Above 10 Mc, the Hewlett-Packard 608A oscillator was utilized, with the output amplified and limited by means of a H. P. 460A and 460B amplifier. The output of the 460B was then attenuated to the required amplitude.

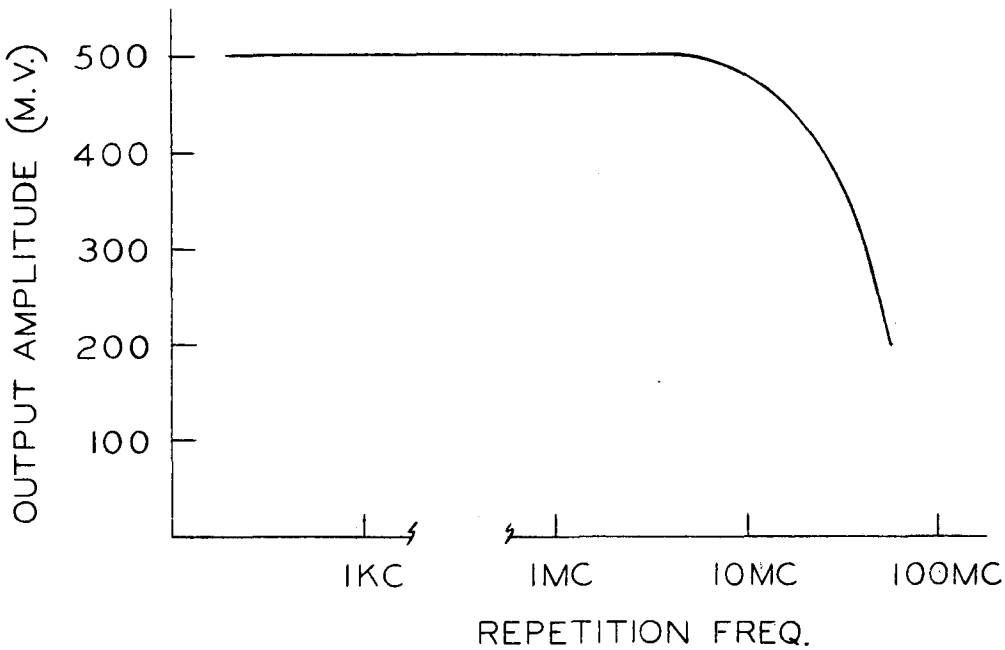

Fig. 7 - Output Amplitude vs. Repetition Frequency.
Input Pulse 0.5 V at 20 ns; clipping time 5 ns.

Fig. 8 shows the double pulse resolution time of the unit. Here a UCRL Hg. Pulser was used at 60 pps. The double pulse resolution is about 20 ns.

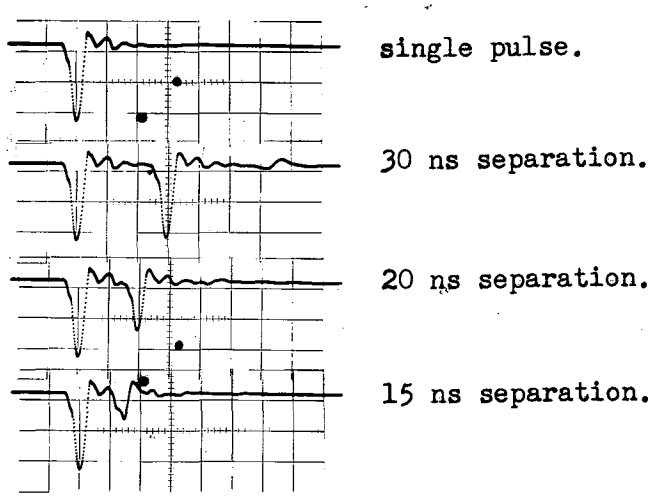

Fig. 8 - Double Pulse Resolution.
Input pulse, 0.5 V at 8 ns; clipping time, 5 ns; repetition frequency 60 pps.
Horizontal sweep, 10 ns/cm; vertical 0.2 V/cm.

November 21, 1960
H. G. Jackson

COUNTING NOTE

PULSE AMPLITUDE DISCRIMINATOR MODEL 2 AND 3

ABSTRACT: This is an all semi-conductor modular unit capable of amplitude discrimination of pulses in the range 0.1 - 2.1v at repetition rates up to 10^7 p.p.s. The output signal is constant in amplitude, at approximately 8v, and in rectangular shape, about 40 ns wide. The unit is primarily intended for driving the Decade Scaler Models 3,4, or 5.[1]

The Model 2 and 3 Pulse Amplitude Discriminators are similar in function, the only difference being in physical size. The Model 2 is intended to fit a $5\frac{1}{4}$" card bin, along with the Model 3 or 4 Decade Scaler. The Model 3 plugs into the $3\frac{1}{2}$" card bin, with the Model 5 Decade Scaler.

Fig. 1 Pulse Amplitude Discriminator Model 3

---

[1] Decade Scaler Model 3 - 1.0μs resolution time, $5\frac{1}{4}$" card bin. (Counting Note CC9-7A)
" " " 4 - 0.2μs " " " " " " " "
" " " 5 - 0.2μs " " $3\frac{1}{2}$" " "

SPECIFICATIONS:

A. Inupt
   1. Signal: Positive pulse
   2. Amplitude: 0.1v - 10v
   3. Width: 10ns - 2μs
   4. Maximum repetition rate 10^7 p.p.s.
   5. Input impedance 125 ohms matched.

B. Output
   1. Signal: Positive pulse
   2. Amplitude: 8v into open circuit, 6v into 125 ohms
   3. Width: 40 ns (rise time 12ns, fall time 12 ns)
   4. Output impedance ~ 25 ohm at 10^4 p.p.s.
      ~ 125 ohm at 10^7 p.p.s.

C. Adjustments
   1. Threshold adjustment: 0.1v to 2.1v by means of a 10-turn potentiometer.
      a. Two small holes in the front panel allow access to two trimpots.
      b. The upper to adjust the minimum discrimination level of 0.1v, and the lower adjusts the maximum level of 2.1v.

D. Power requirements
   1. 15v at 80 ma

CIRCUIT DESCRIPTION: The block diagram of the circuit is shown in Figure 2.

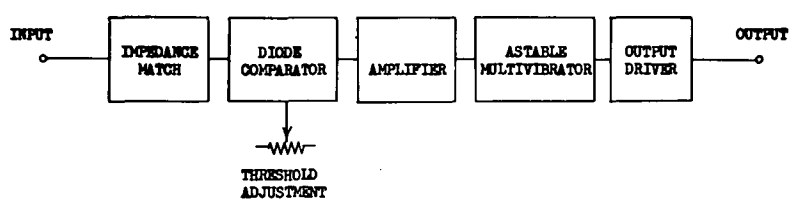

Fig. 2 Block Diagram

The input circuit is a common-base stage (Q1) whose input impedance is constant for pulses < 5v. Positive input pulses turn off the current in the threshold diode (CR1). The quiescent current in this diode is determined by the setting of the Helipot. The emitter of Q2 is a low impedance point to hold the discriminator bias constant for all counting rates. When the input current is greater than the quiescent current in CR1, current is allowed to flow in the emitter of the first amplifier transistor (Q3). Diode CR2 gives temperature stability to the discriminator threshold, by compensating for any change at the emitter of Q3 due to the temperature dependence of CR1. The two-stage common-emitter amplifier (Q4 and Q3) with a gain of about 4, amplifies the portion of the input pulse that exceeds the discriminator threshold to trigger the pulse shaping circuit. The monostable multivibrator (Q6 and Q7) is an emitter coupled timing circuit, with an output pulse width of 40 ns. For input pulses wider than 40 ns, the output pulse will widen to the input pulse width, up to about 2 μs. For input pulses wider than 2 μs, multiple pulses will appear at the output. The output driver is the common collector stage Q8.

Figure 3 shows the output signal operating into a 125 ohm load at 10^6 p.p.s. and 10^7 p.p.s.

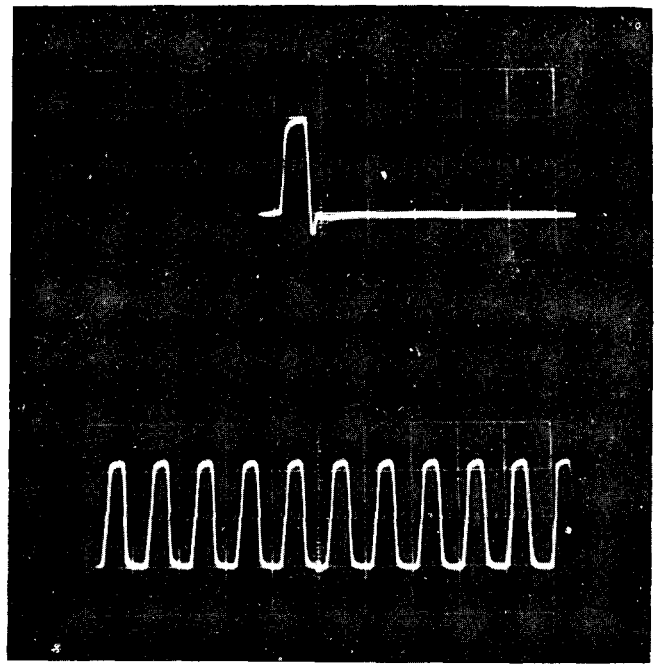

(a)

(b)

Fig. 3 Output Signals (a) at 10^6 p.p.s. repetition frequency (b) at 10^7 p.p.s. Horizontal Sweep, 100ns/cm; vertical, 3v/cm.

PERFORMANCE TESTS: Figure 4 shows the excess signal required for pulse widths shorter than 100 ns. Note that a 10 ns pulse requires an additional 50 mv over the maximum threshold sensitivity for long pulses. At the minimum sensitivity level, an additional 300 mv is required for 10 ns wide pulses. This test was made with a mercury switch pulser at 60 p.p.s.

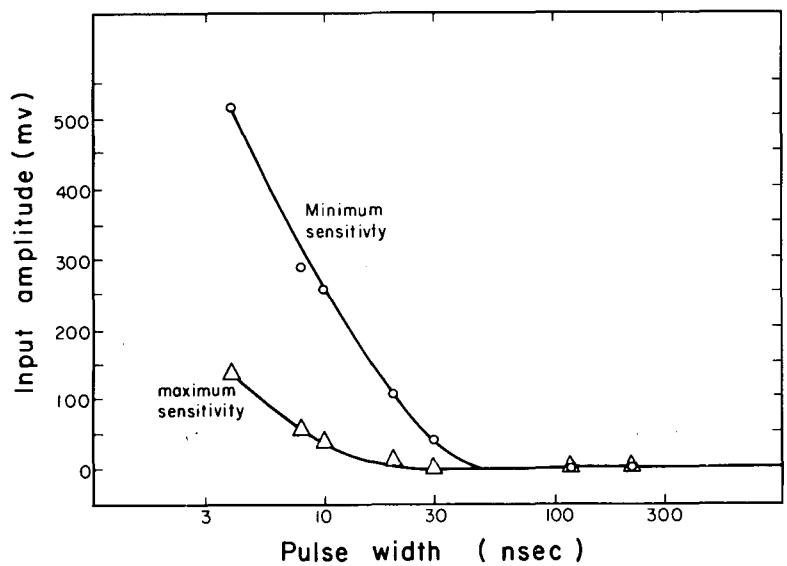

Fig. 4 Excess input signal required for short pulse lengths at maximum and minimum threshold sensitivity settings.

It is important that a discriminator threshold remain constant over a wide range of counting rates. Figure 5 shows the variation in pulse amplitude required to trigger the discriminator at various pulse repetition rates when the threshold level is adjusted to minimum and maximum sensitivities. A Nanosecond Pulse Generator[2] was used for this test. It should be noted that the discriminator is A-C coupled at the input. There will, therefore, be a shift of the base line of the input signal equal to (W) (R) (100) %; where W = input pulse width (secs)
R = input pulse repetition rate (1/secs)

---

[2] Counting Note CC10-3

Thus a 2v pulse of 10 ns width at 10^7 p.p.s. will appear to the discriminator to have an amplitude of 1.8v.

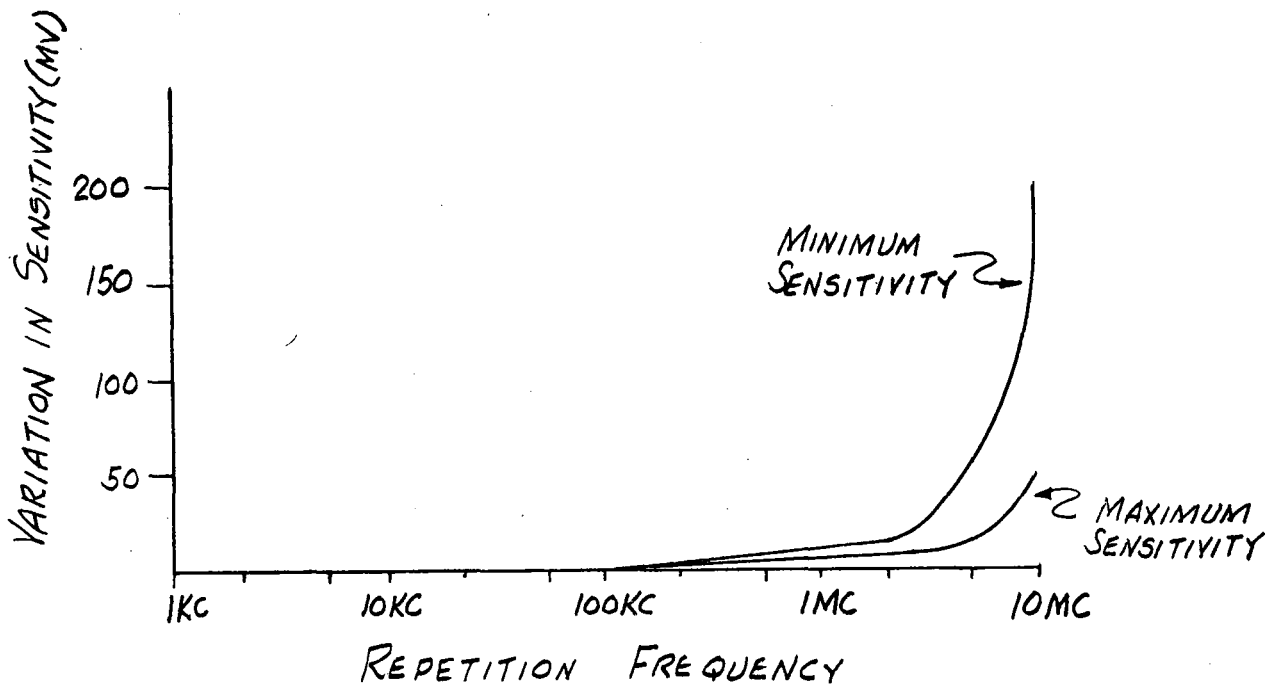

Fig. 5 Input sensitivity at minimum and maximum threshold settings as a function of frequency. Pulse width = 10 ns.

Figure 6 illustrates the variation in delay time of the output signal as a function of the amount the input signal amplitude exceeds the threshold level. The threshold in this case was adjusted to 0.1v. The test was made with a mercury pulser at 60 p.p.s. generating a 120 ns wide pulse.

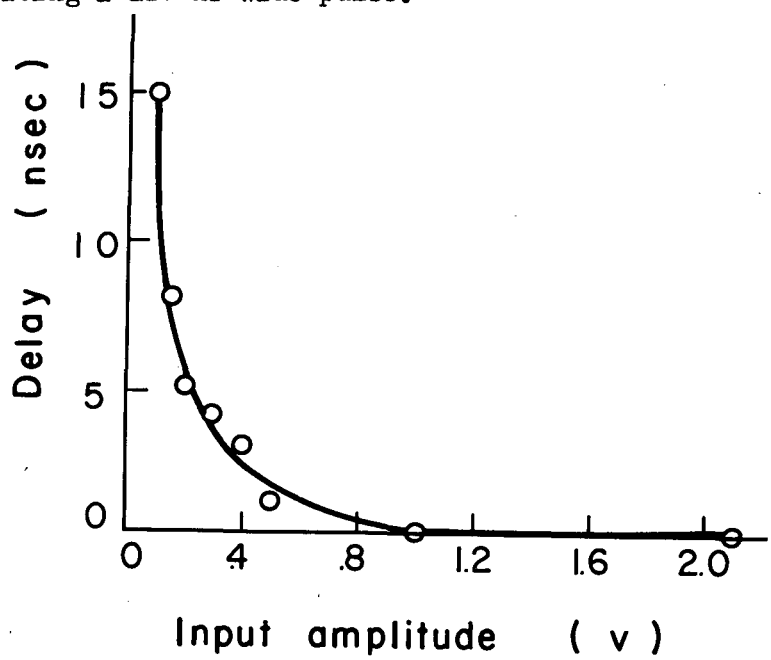

Fig. 6 Relative delay of output signal as a function of input amplitude.

THRESHOLD STABILITY: The variation of threshold level with temperature is about 1 mv/°C. This figure was checked by using a decade scaler card bin power supply. The temperature coefficient can be improved by as much as five times by using a power supply with improved temperature stability.

The threshold level should also drift not more than 1 mv/day at constant temperature.

The maximum operating temperature should be limited to 55°C.

REFERENCES:

1. Transistor Counting Systems for Scintillation Detectors, Baker, et al, UCRL 9000, February 17, 1960, also IRE Trans. on Nuclear Science, Vol. NS-7, June-September, 1960.

2. Schematic 3X8654 Pulse Amplitude Discriminator Model 2.
Schematic 3X9994 Pulse Amplitude Discriminator Model 3.

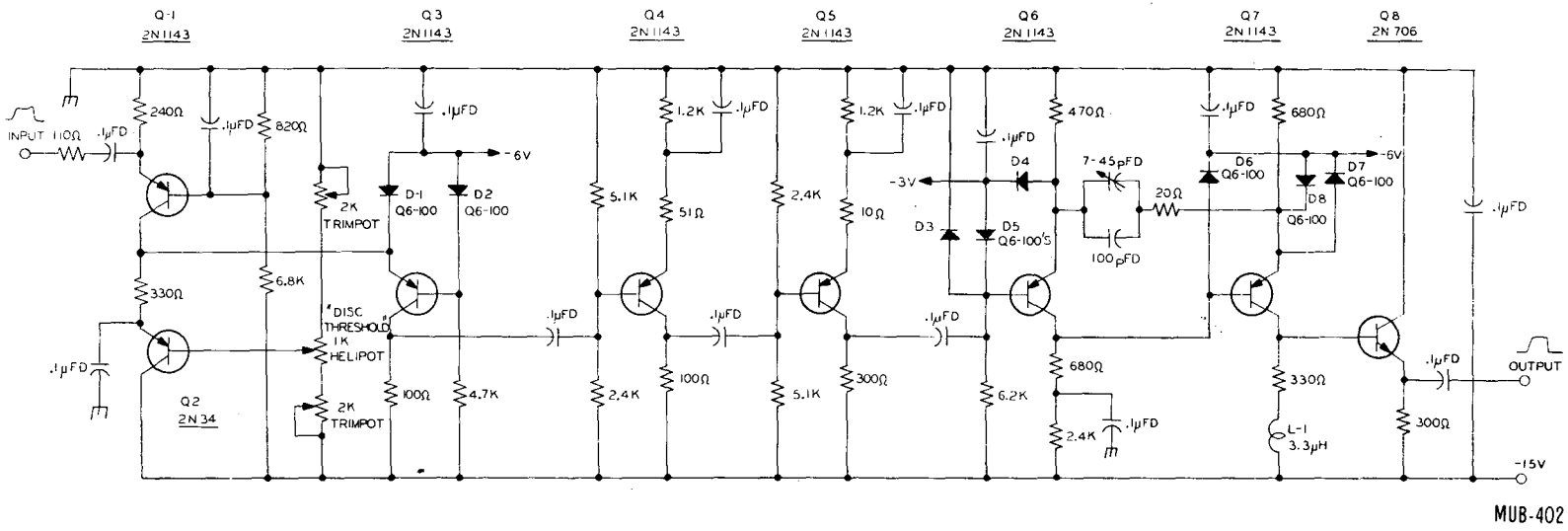

Fig. 7 - Pulse Amplitude Discriminator

File No. CC 3-12 (1)
January 10, 1964
H. G. Jackson

Lawrence Radiation Laboratory, University of California, Berkeley

COUNTING NOTE

4-WAY "AND", 1 "INHIBIT" CIRCUIT - 11X2401 P-1

I. SUMMARY

This unit is a direct-coupled 4-way diode "AND" circuit followed by transistor amplification. One "INHIBIT" input is also provided, inhibiting any output. Standard +4 V logic levels are used.[1] Except for the parallel NPN-PNP output emitter-followers, all transistors are either off, or saturated on.

Provision is made for turning any of the 4 "AND" inputs off by means of toggle switches. "0" indicates the channel is off, inoperative.

The unit is packaged in a shielded nanobox. A size 3X box (2-1/4 x 5-1/4" panel) is used.

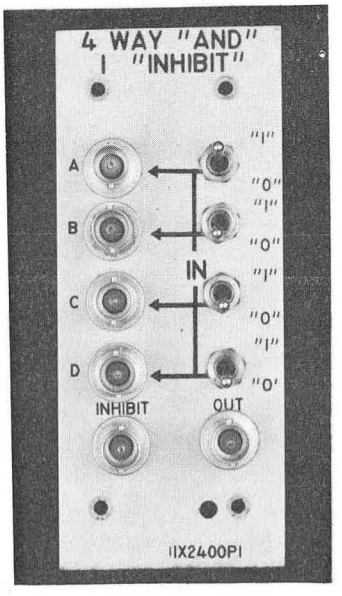

Fig. 1 - 4-WAY AND, 1 INHIBIT, Circuit -- Front View

II. SPECIFICATIONS

Input

Impedance	1 K Ω
"1" Level	+4 V
"0" Level	-1 V

Output

Impedance	< 50 Ω (50 mA max.)
"1"	+4 V
"0"	-1 V
Delay	< 15 ns for pulse rise
	< 15 ns for pulse fall
Rise-time	< 15 ns for step input

Power Required

+12 V	40 mA (90 mA max.)	pin 10.
-12 V	8 mA	pin 21.
Ground		pin 1.

[1] See CC 5-9 for logic voltage levels.

HGJ:mt

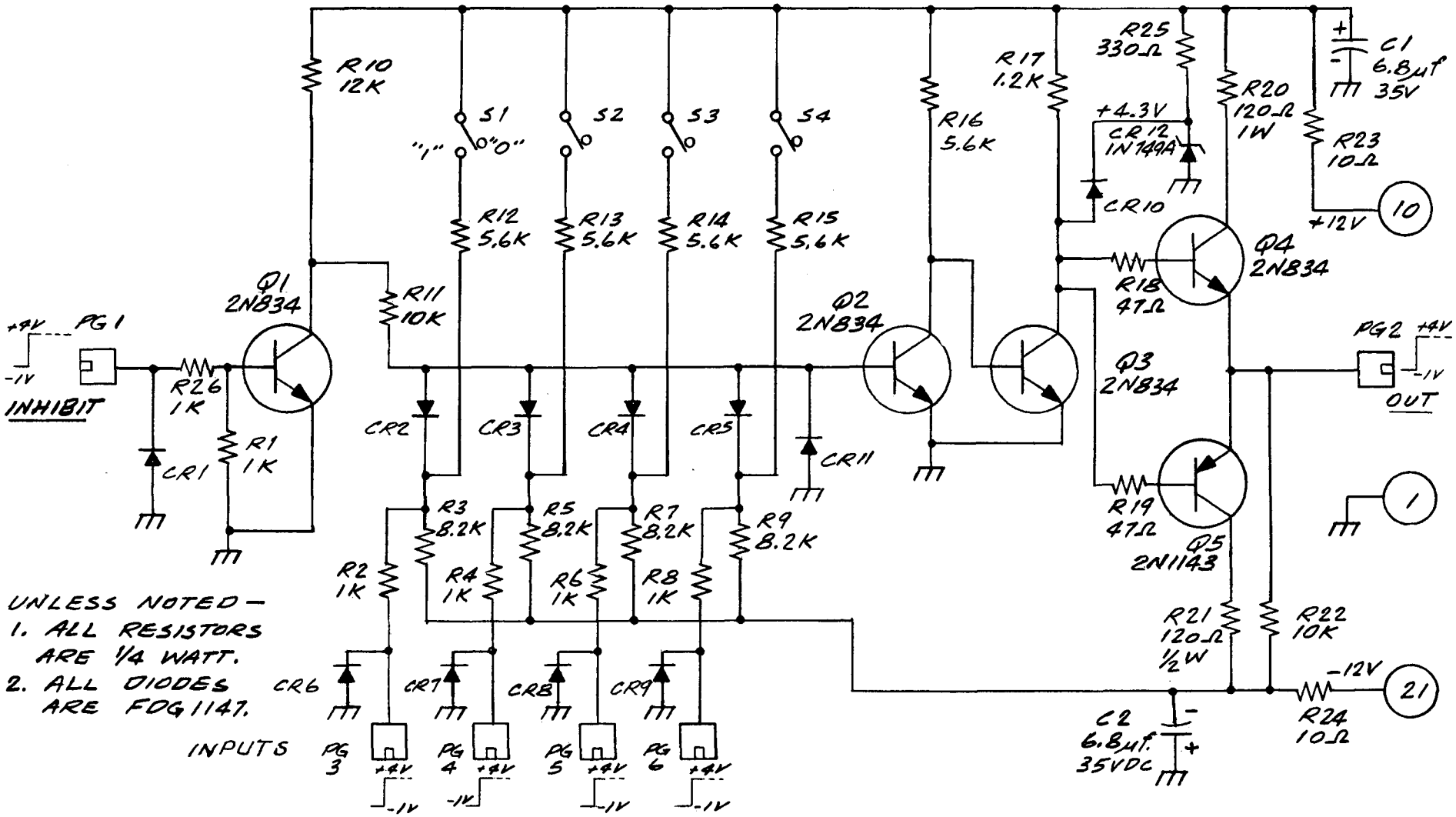

4-Way "AND", 1 "INHIBIT" Circuit Schematic

File No. CC 3-13 (1)
January 13, 1964
H. G. Jackson

Lawrence Radiation Laboratory, University of California, Berkeley

COUNTING NOTE

5 WAY "OR" CIRCUIT - 11X2441 P-1

I. SUMMARY

This unit is a basic 5 way diode "OR" circuit followed by transistor amplification; it uses standard 4 V logic levels.[1] Except for the parallel NPN-PNP output emitter-followers, all transistors are either off or saturated on.

The unit is packaged in a shielded nanobox. A size 3X box (2-1/4 x 5-1/4" panel) is used.

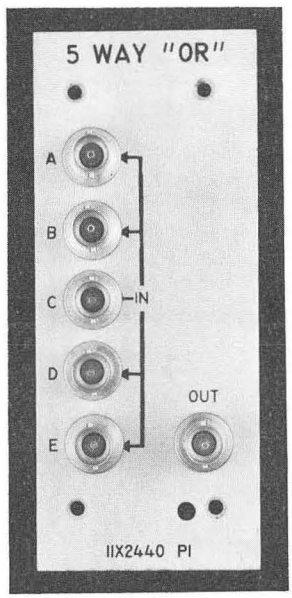

Fig. 1 - 5 Way "OR" Circuit -- Front View

II. SPECIFICATIONS

Input

Impedance	1 K Ω
"1" Level	+4 V
"0" Level	-1 V

Output

Impedance	< 50 Ω (50 mA max.)
"1"	+4 V
"0"	-1 V
Delay	< 15 ns
Rise-time	< 15 ns for step input

Power Required

+12 V	40 mA (90 mA max.)	pin 10.
-12 V	1 mA	pin 21.
Ground		pin 1.

[1] See CC 5-9 for logic voltage levels.

HGJ:mt

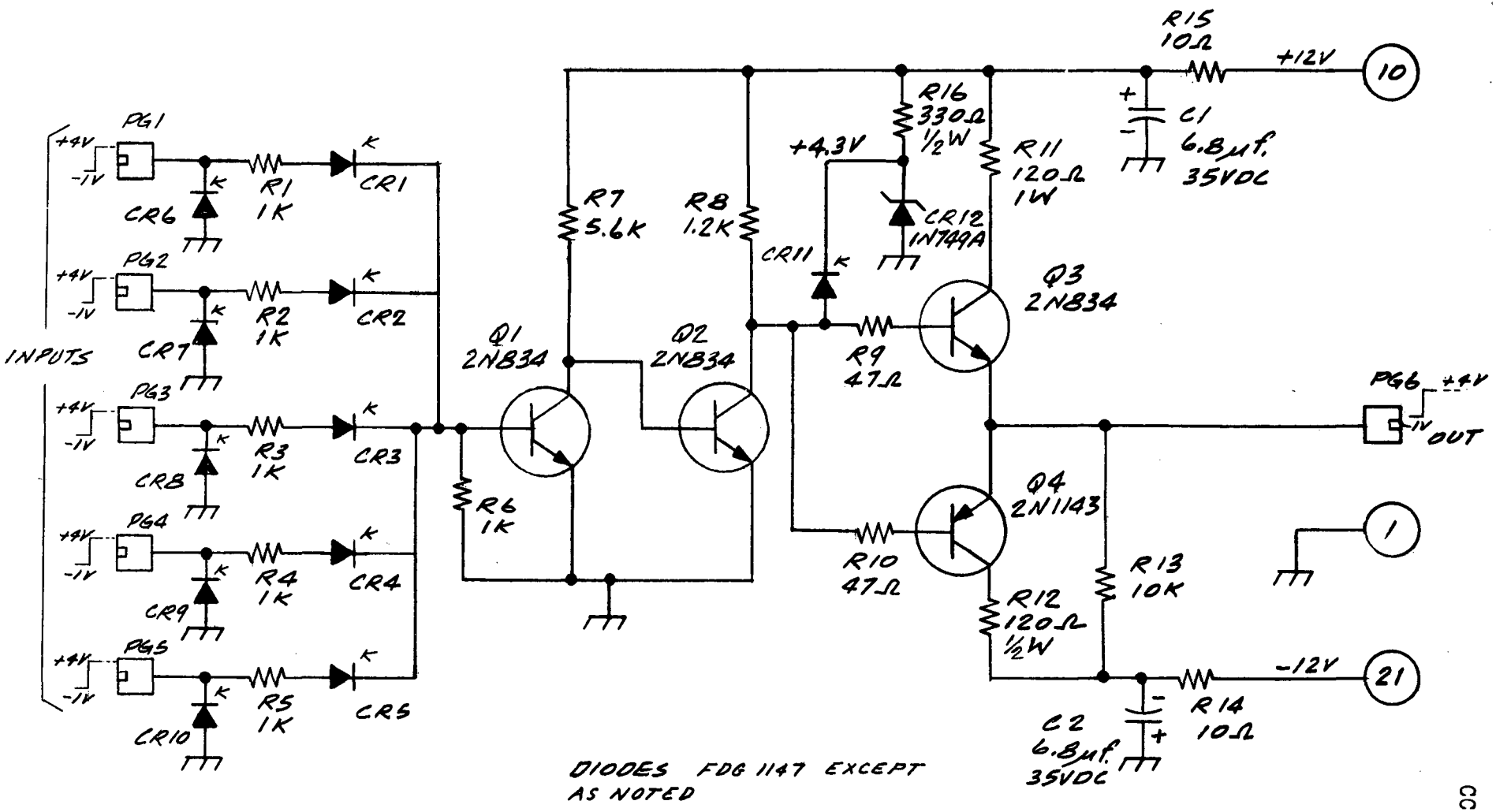

5 Way "OR" Circuit Schematic

File No. CC 3-14 (1)
January 10, 1964
H. G. Jackson

Lawrence Radiation Laboratory, University of California, Berkeley

COUNTING NOTE

5-WAY FANOUT - 11X2781 P-1

I. SUMMARY

This unit is intended to make more signal current available at the standard +4 V logic level.[1] The circuit is basically a current switch, with an emitter-follower driving five similar parallel NPN-PNP emitter-followers.

The unit is packaged in a shielded nanobox. A size 3X box (2-1/4 x 5-1/4" panel) is used.

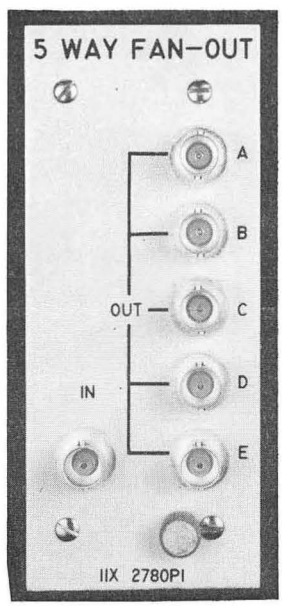

Fig. 1 - 5-WAY FANOUT -- Front View

II. SPECIFICATIONS

Input

Impedance	1 K Ω
"1" Level	+4 V
"0" Level	-1 V

Power Required

+12 V	50 mA (250 mA max.)	pin 10.
-12 V	20 mA	pin 21.
Ground		pin 1.

Output (5 similar outputs)

Impedance	< 50 Ω (40 mA max.)
"1"	+4 V
"0"	-1 V
Delay	< 15 ns
Rise Time	< 15 ns (step input)

[1] See CC 5-9 for logic voltage levels.

HGJ:mt

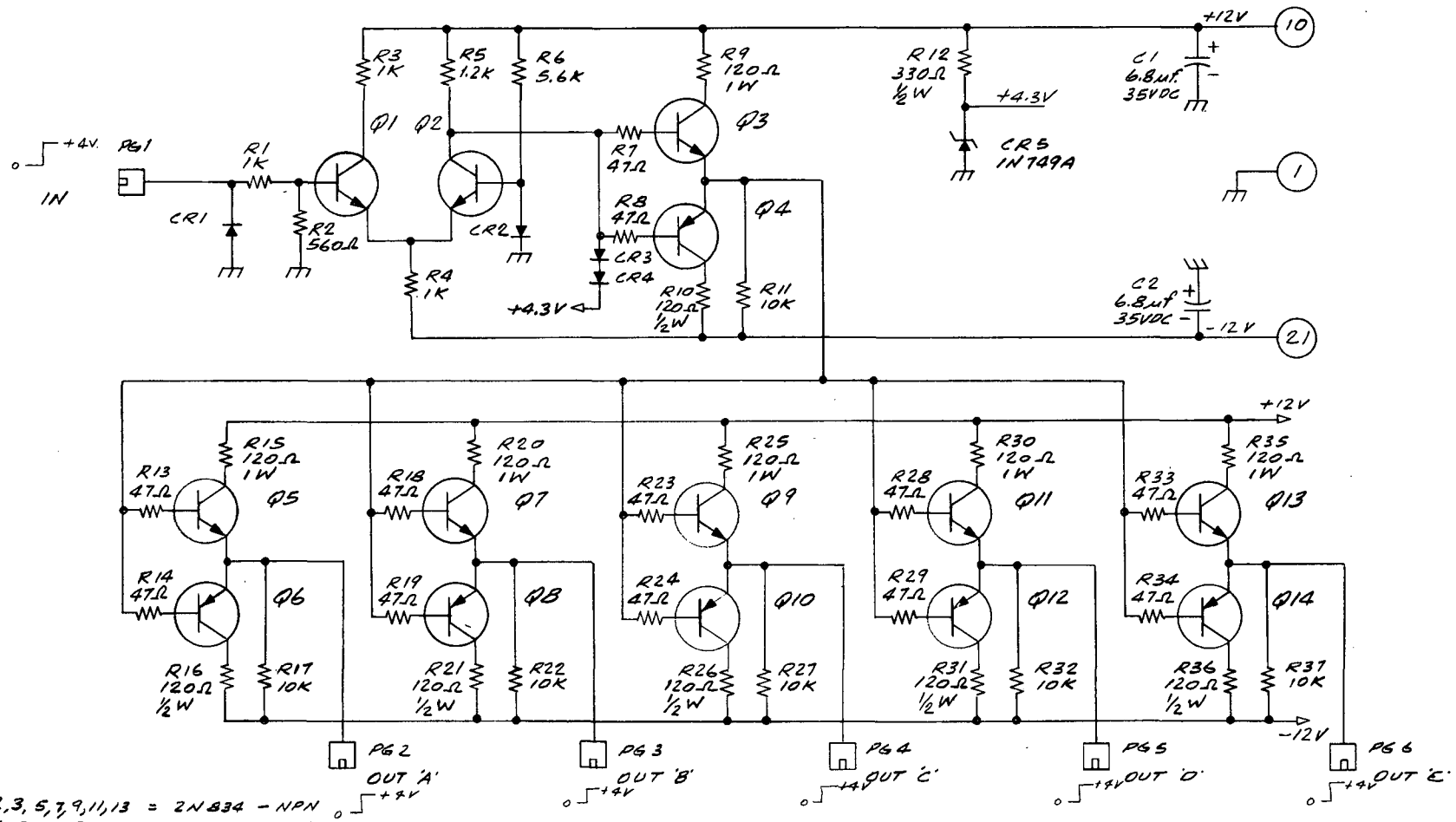

Q1,2,3,5,7,9,11,13 = 2N834 - NPN
Q4,6,8,10,12,14 = 2N1143 - PNP
CR 1,2,3,4 = FDG 1147

UNLESS NOTED:—
1. RESISTORS ARE ¼ WATT. CARBON COMP. - 5%

5-Way Fanout Schematic

File No. CC 3-15 (1)
March 11, 1964
D. L. Wieber

Lawrence Radiation Laboratory, University of California, Berkeley

COUNTING NOTE

TIME-TO-HEIGHT CONVERSION SYSTEM - 11X1581 P-1

I. SUMMARY

This system converts the time interval, between the negative going edge of a "start" pulse and the negative going edge of a "stop" pulse, into a linearly related pulse amplitude. See Fig. 1. The output pulse is amplified and shaped so as to properly drive most pulse-height analyzers in use at LRL. With minor modifications this system can be used to measure time intervals ranging from 10 psec to 200 μsec.

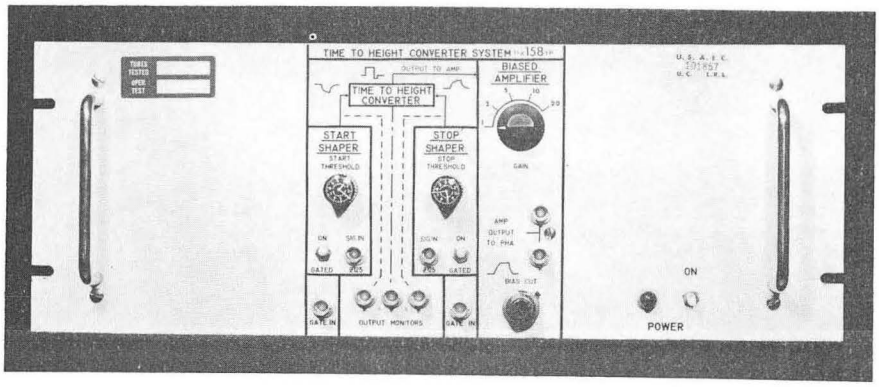

Fig. 1 - Time-to-Height Converter System

II. SPECIFICATIONS

All specifications are given with the unit as initially constructed for a 100 nsec maximum time range. They are negligible functions of the maximum time range, except where noted.

A. SYSTEM

1. Noise, FWHM — 4 psec jitter due to discriminator-shapers plus 20 mV amplifier noise, when driven by a mercury pulser through fixed delays.
2. Stability — 2 psec/°C due to discriminator-shapers and converter, after 15 minutes warm up.
3. Linearity
   a. Integral — ± 1% from 1 nsec to 100 nsec, see Section IIIA and Fig. 2.
   b. Differential — ± 3%, as measured on a Delay Sweep unit (10X1080P-1)[1]
4. Duty Cycle — 10% maximum.

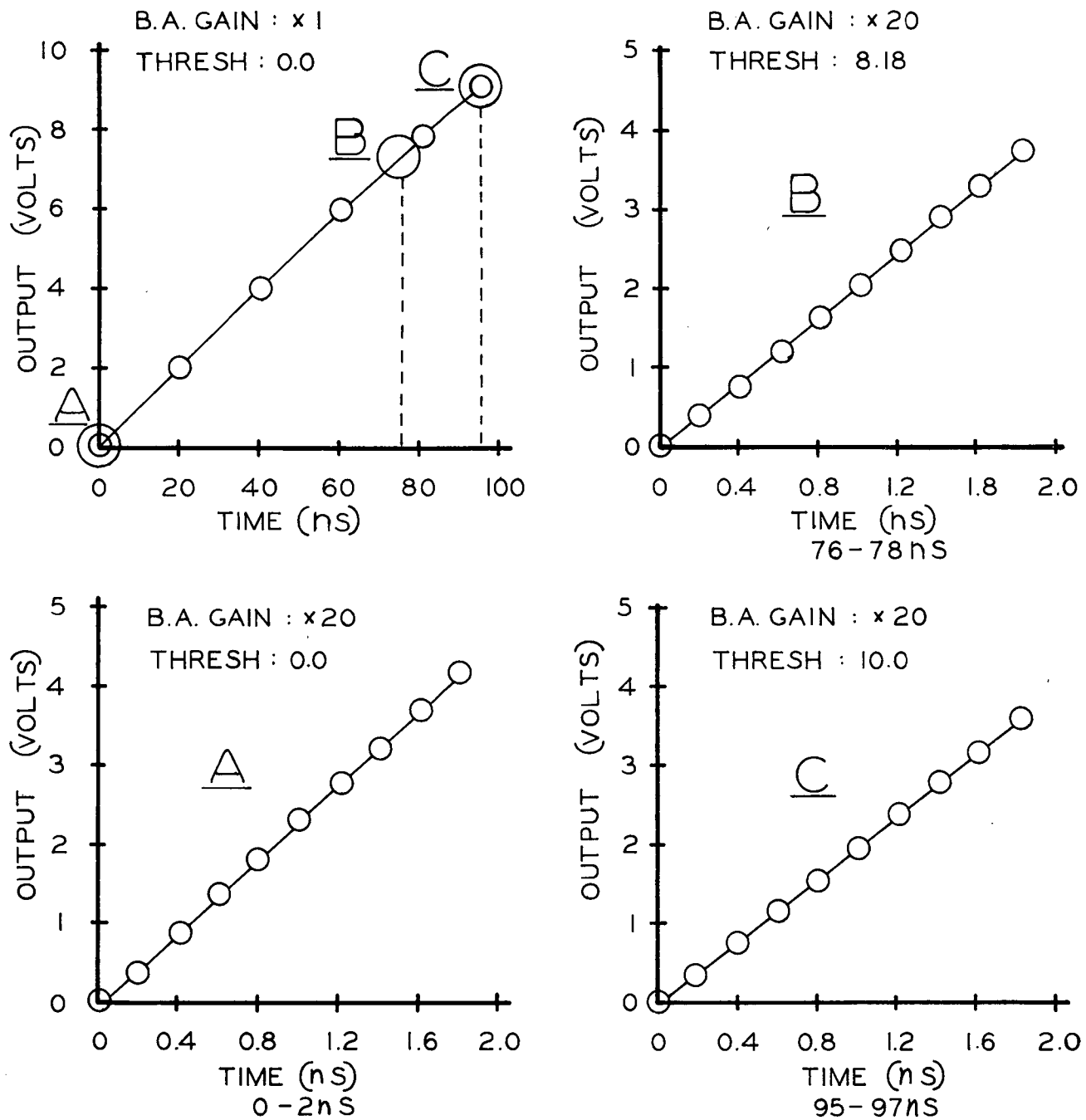

Fig. 2 - Discriminator Linearity.
A, B, and C show 2 nsec windows expanded through the Biased Amplifier.

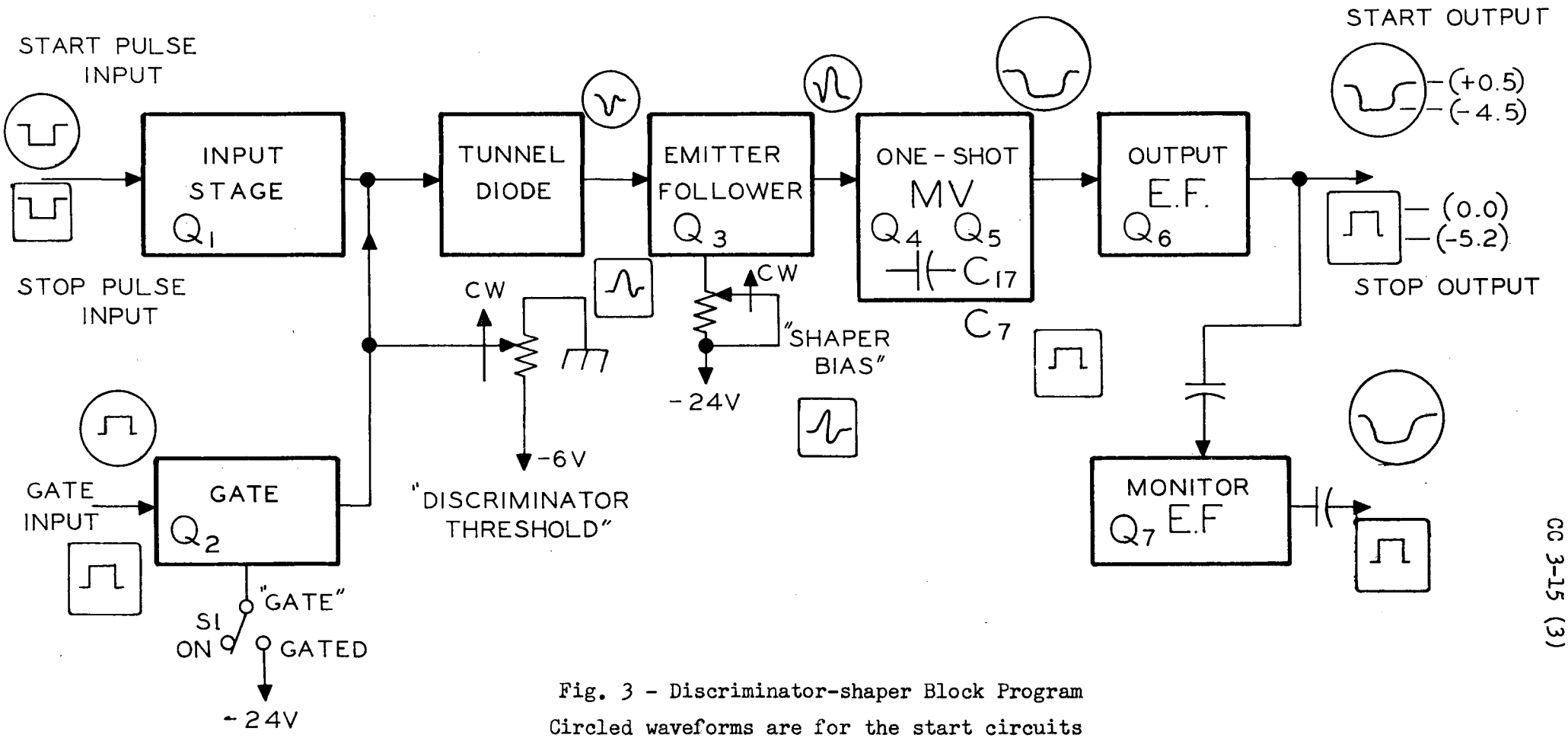

Fig. 3 - Discriminator-shaper Block Program

Circled waveforms are for the start circuits
Stop circuit waveforms are in squares.

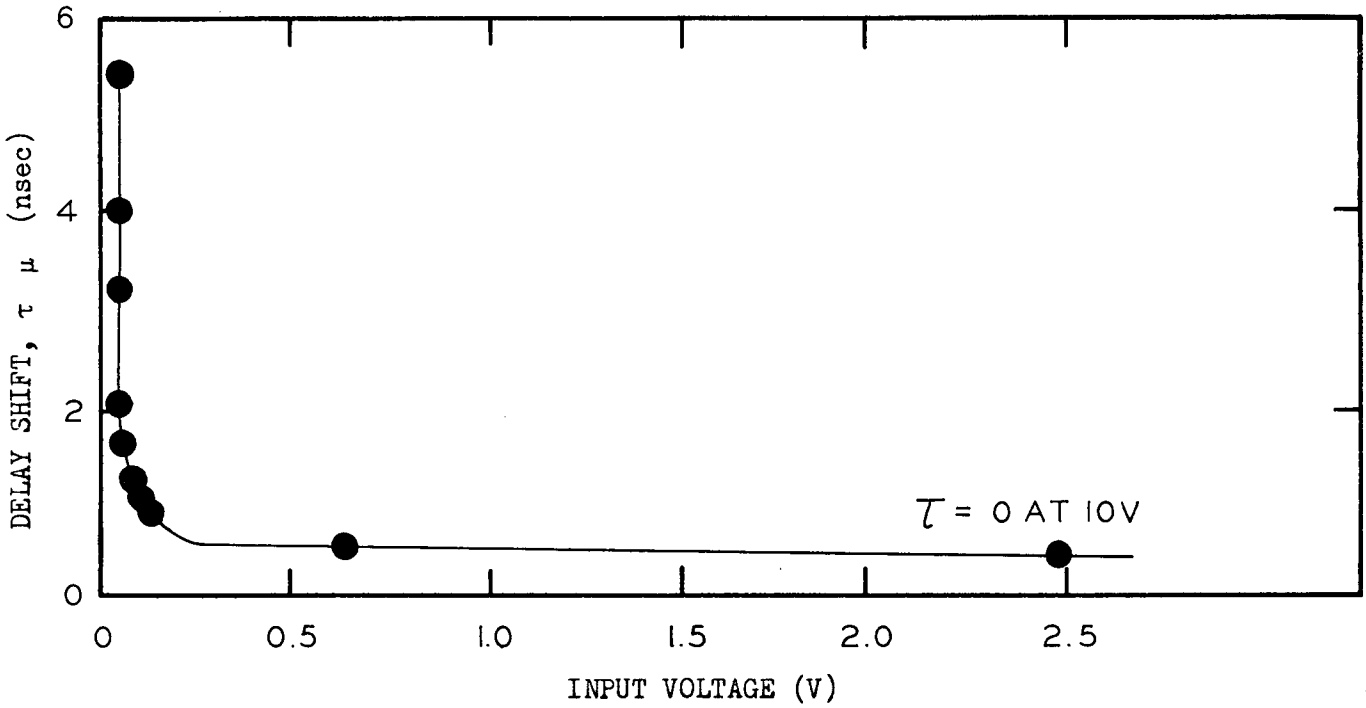

Fig. 4 - Delay shift of discriminator-shaper as a function of input pulse amplitude for a step input. The Threshold voltage is 30 mV.

B. <u>Discriminator-Shapers, See Fig. 3</u>.

The Start and Stop circuit, specifications are identical, except when noted.

1. Signal Input.

a.	Polarity	negative
b.	Threshold	10 mV to 600 mV, adjustable
c.	Width	4 to 100 nsec, see Fig. 4.
d.	Impedance	125 Ω ac, for negative signals.
e.	Frequency, F_{max}	100 kc, see Section III A-1.

2. Output.

		Start Discriminator (5X2682 D), see Fig.6	Stop Discriminator (5X2722 D), see Fig.7
a.	Polarity	negative	positive
b.	Amplitude	5 V	5 V
c.	Impedance	100 Ω dc	100 Ω dc
d.	Rise-time	3 nsec	3 nsec
e.	Width, see Section III A-1	1 μsec	1.2 μsec
f.	D.C. level	+0.5 V	-5.2 V

3. Gate Input, see Section III-C.

   With the GATE switch in the GATED position:

   a. Polarity — positive to gate ON
   b. Amplitude — 2 to 4 V
   c. Delay — Gate input must be present at least 0.1 μsec before signal input.
   d. Impedance — 1 K Ω dc

C. Time-to-Height Converter (5X2703A), see Figs. 5 and 8.

1. Inputs — same as discriminator-shaper outputs.
2. Linearity — see system linearity Specification A-3.
3. Duty Cycle — limited by associated circuits.
4. Minimum Measurable Time Interval — "start" pulse must arrive at least 1 nsec before "stop" pulse.
5. Conversion ratio — 100 mV/nsec, see Section III A-2
6. Output
   a. Polarity — positive.
   b. Amplitude — 0 - 8 V
   c. Width — ~1 μsec, see Section III A-2.
   d. Impedance — 220 Ω ac.
   e. Rise-time — 100 mV/nsec, see Section III A-2.

D. Biased Amplifier (11X1481 P-1)

1. Input
   a. Polarity — positive.
   b. Threshold — 0.1 to 9 V, adjustable.
   c. Impedance — non-linear.
   d. Duty Cycle — 10% maximum.
2. Gain — X1, X2, X5, or X20, adjustable.
3. Output
   a. Polarity — positive.
   b. Amplitude — 0-8 V.
   c. Impedance — 100 Ω.

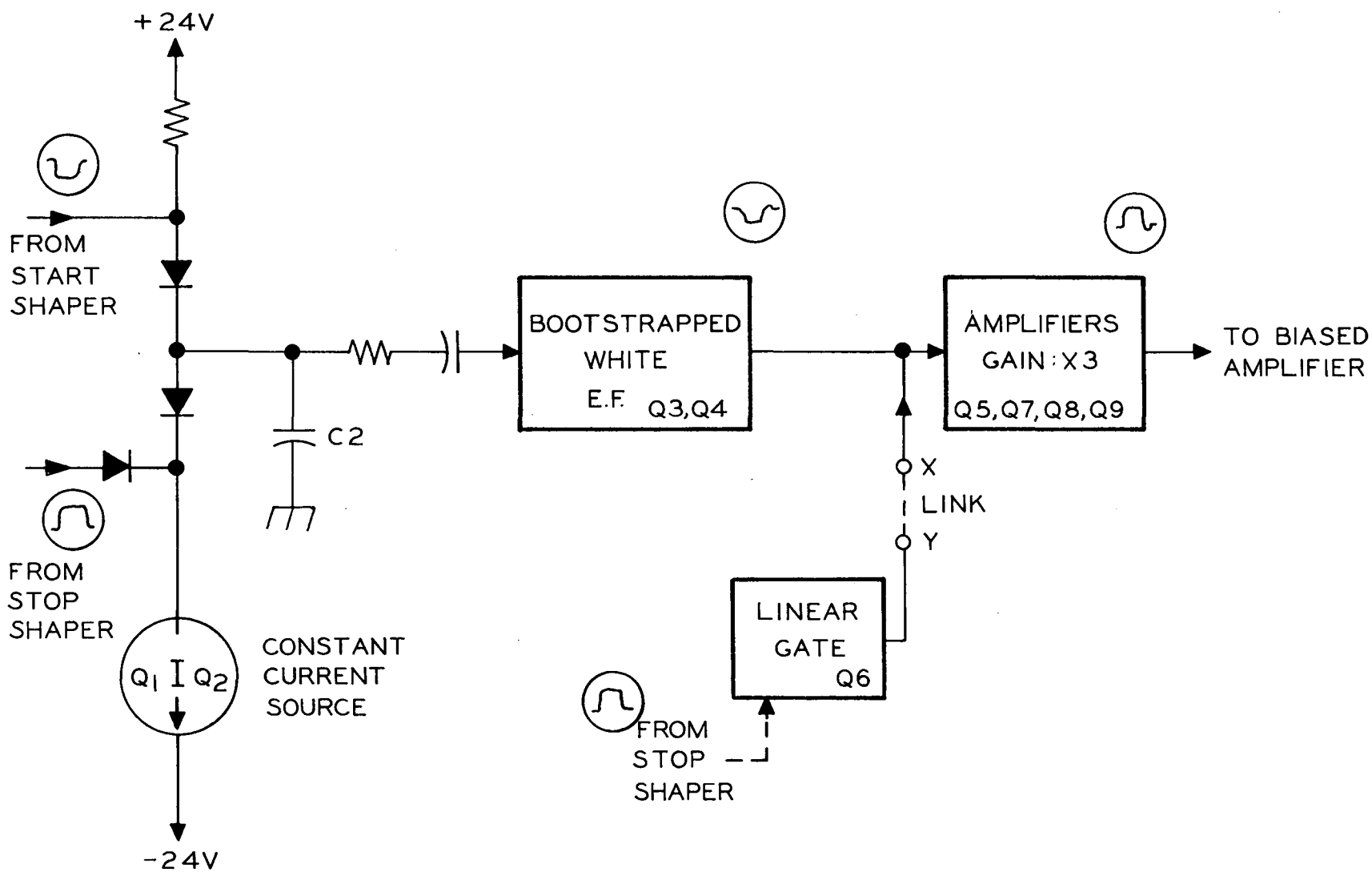

Fig. 5 - Block Diagram of Time-to-Height Converter

III. OPERATION

A. Change of maximum measurable time range.

In order to change the maximum time range, T_{max}, over which the system will operate with the specified linearity, the following modifications are necessary. It is recommended that the Nuclear Instrumentation support group be contacted to make these changes.

1. Discriminator-Shapers.

C17 in the "start" circuit and C7 in the "stop" circuit determine the shaper pulse widths. This width must be chosen to be at least 1 μsec longer than T_{max}. The capacitor value is given by:

$$C17\ (5X2682D) = C7\ (5X2722D) = \frac{(T_{max} + 1)\ \mu sec}{1470}\ \mu F$$

Remember that the maximum duty cycle should be kept below 10%.

2. Time-to-Height Converter (5X2702C).

The conversion ratio, V_o/t, is a function of capacitor C2,

$$\frac{V_o}{t} \simeq \frac{3 \times 10^{-2}}{C2}\ V/sec.$$

For a given T_{max},

$$C2 \simeq \left[3 \times 10^{-3}\ T_{max}\ (\mu sec)\right]\ \mu F.$$

For large values of C2, the output rise time may be too slow for proper operation of the PHA. This maximum allowable rise time may be as low as 0.5 μsec. Therefore, if C2 $\geq$ 1500 μF, the following changes should be made:

a. Link X - Y on 5X2702C should be connected.

b. Pin 8 of 5X2722D should be connected to pin 8 of 5X2702C.

The converter output is then clamped to ground until the arrival of the "stop" pulse, then allowed to rise quickly. Since, under conditions of high repetition rates in the "start" channel this operation can cause additional duty cycle sensitivity, its use is not recommended unless required by the Pulse Height Analyzer.

B. System Time Resolution.

The system time jitter and noise, as noted under Specifications A-1, is seldom a significant factor in the timing resolution of an experimental set-up. Experimental resolution is usually limited by some combination of the following factors:

1. Detector collection-time distribution.
2. Detector amplitude distribution, which is converted to timing errors as shown in Fig. 4.
3. Duty cycle variations at high average repetition rates.

The first two contributions are discussed at length in references 2-4 listed at the end of this report.

The third contribution is negligible if the shaper duty cycles are kept well below 10%. At higher counting rates the resolution is affected due to the statistical occurance of pulses spaced so as to exceed the 10% maximum duty cycle limitation.

Note that arrival of a "start" pulse without a coincident "stop" pulse will result in an output pulse of maximum amplitude. Such action may cause shift or count loss in the Pulse Height Analyzer at high repetition rates. These effects can be minimized by proper gating and, when there is a significant difference in singles counting rates, by operating the "start" channel at the lower counting rate.

C. Gated Operation of Discriminator-Shapers.

Fast-rising Gate input pulses may internally couple to the signal input. Therefore, the THRESHOLD should be set above 150 mV for gated operation. Note that the gate must be applied at least 0.1 μsec before the signal.

IV. REFERENCES

1. M. Birk, Q. A. Kerns, T. A. Nunamaker, Electronic Variable Delay for Tracing Characteristic Curves of Coincidence Circuits and Time-to-Height Converters, Lawrence Radiation Laboratory Report UCRL-10784 also Engineering Note EE-911, Reprint in RSI, Vol.34, No.9, 1026-1028
2. A. E. Bjerke, Q. A. Kerns, and T. A. Nunamaker, "Pulse Shaping and Standardization of Photomultiplier Signals for Optimum Timing Information Using Tunnel Diodes", Lawrence Radiation Laboratory Report UCRL-9838, Reprint in Nuclear Instruments & Methods 15 (1962) 249-267
3. D. L. Wieber, "A Fast, Wide-Range Time-to-Height Conversion System", Lawrence Radiation Laboratory Report UCRL-10425, also reprint in Nuclear Instruments & Methods 24 (1963) p. 269.
4. D. L. Wieber, Time-to-Height Converter System, Engineering Note EE-901.

DLW:mt

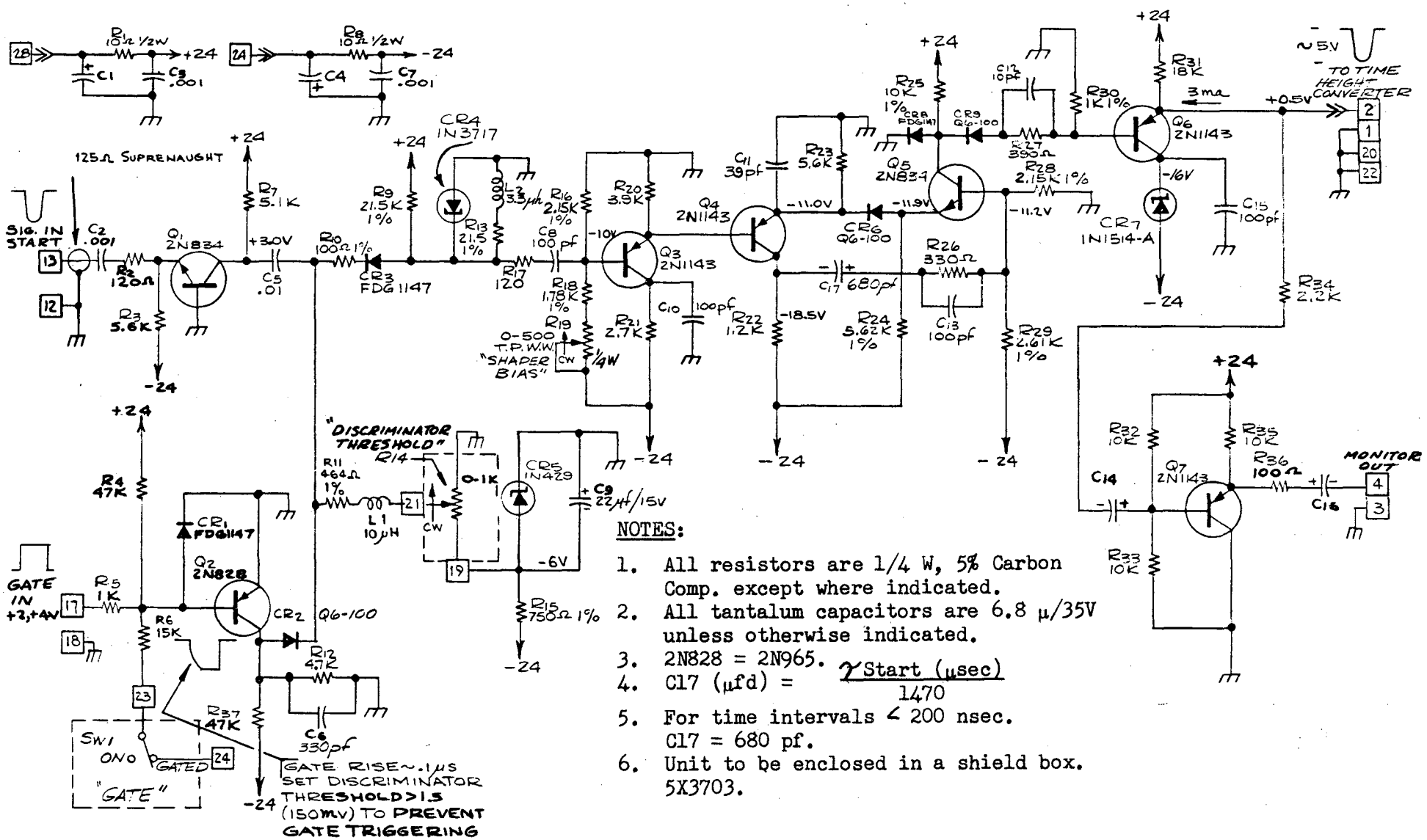

NOTES:

1. All resistors are 1/4 W, 5% Carbon Comp. except where indicated.
2. All tantalum capacitors are 6.8 μ/35V unless otherwise indicated.
3. 2N828 = 2N965.
4. C17 (μfd) = $\frac{\tau \text{ Start } (\mu\text{sec})}{1470}$
5. For time intervals < 200 nsec. C17 = 680 pf.
6. Unit to be enclosed in a shield box. 5X3703.

Fig. 6 - Schematic Diagram of Start Discriminator-shaper.

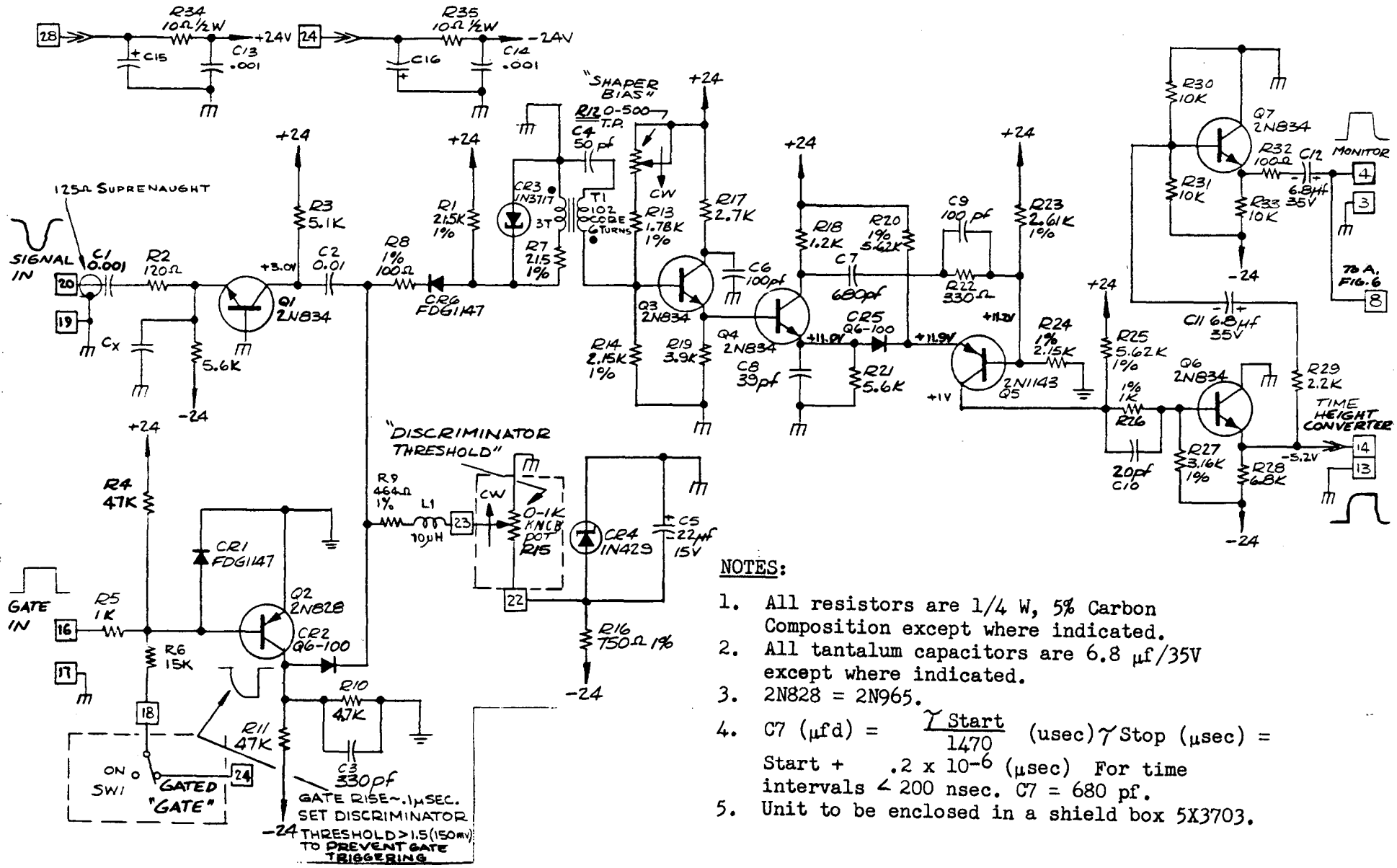

NOTES:

1. All resistors are 1/4 W, 5% Carbon Composition except where indicated.
2. All tantalum capacitors are 6.8 μf/35V except where indicated.
3. 2N828 = 2N965.
4. C7 (μfd) = $\frac{\tau \text{ Start}}{1470}$ (usec) τ Stop (μsec) = Start + $.2 \times 10^{-6}$ (μsec) For time intervals < 200 nsec. C7 = 680 pf.
5. Unit to be enclosed in a shield box 5X3703.

Fig. 7 - Schematic Diagram of Stop Discriminator-shaper.

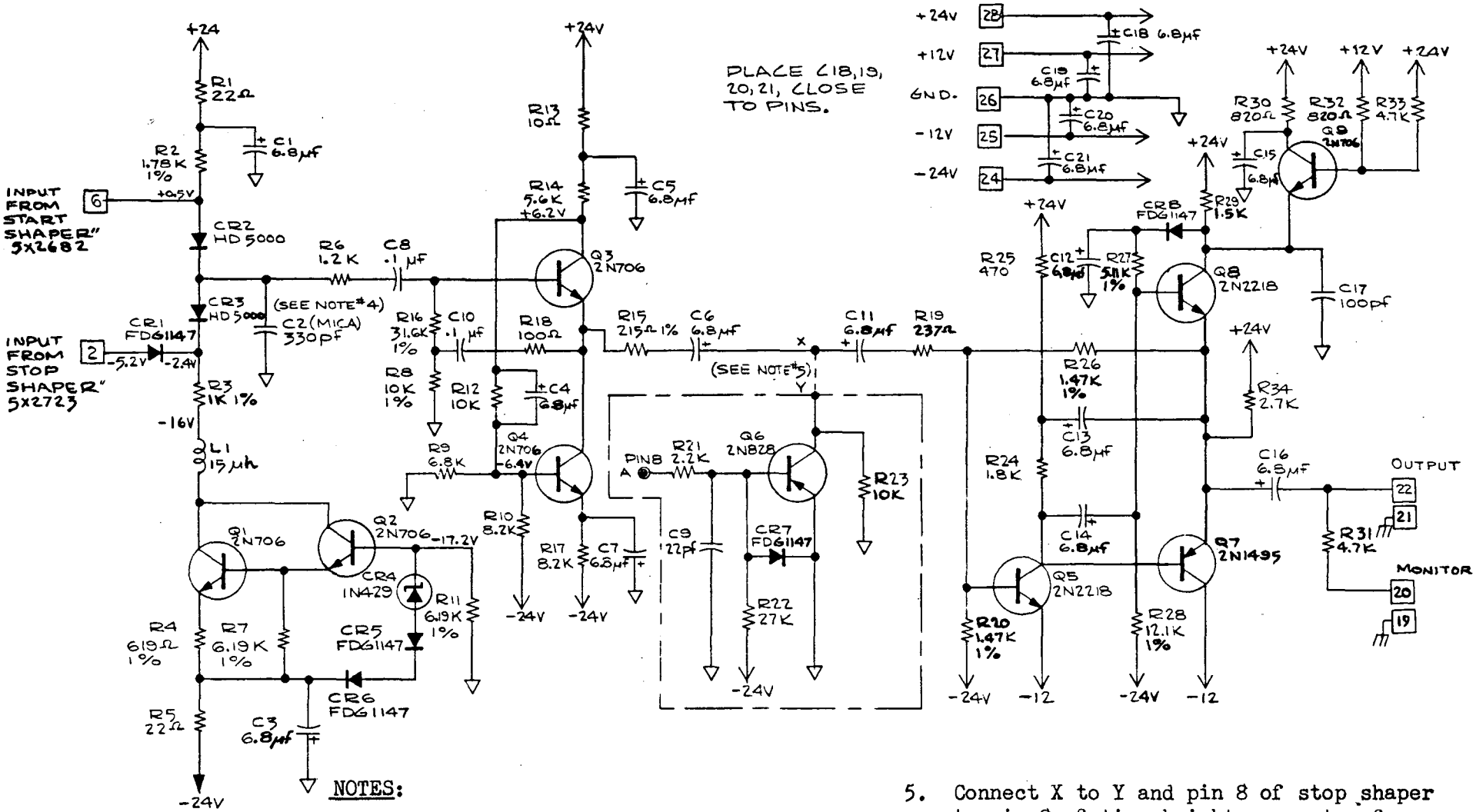

NOTES:

1. All resistors are 1/4 W, 5% unless noted.
2. All tantalum capacitors are 6.8 μf/35V.
3. 2N828 = 2N964
4. $C2 = \frac{Max}{300}$ mica.
5. Connect X to Y and pin 8 of stop shaper to pin 8 of time height converter for C2 > .01 μf.
6. Unit to be enclosed in shield box 5X3703.
7. Grounded pins are: 1,3,4,5,7,9,11,13,15, 17,18,21,26.

Fig. 8 - Schematic Diagram of Time-to-Height Converter.

File No. CC 3-16 (1)
February 15, 1966
H. G. Jackson

Lawrence Radiation Laboratory, University of California, Berkeley

COUNTING NOTE

5-WAY FANOUT - 11X2781 P-2

I. SUMMARY

The 5-Way Fanout 11X2781 P-1 has been packaged in a Nuclear Instrument Module. A Size 1X (1.35 x 8.75" panel) is used.

The unit is intended to make more signal current available at the standard +4 V logic level.[1] The circuit is basically a current switch, with an emitter follower driving five similar parallel NPN-PNP emitter followers.

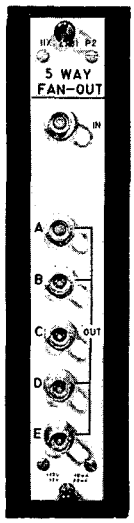

Fig. 1 - Front Panel View of 5-Way Fan-Out

II. SPECIFICATIONS

Input

Impedance	1 K Ω
"1" level	+4 V
"0" level	-1 V

Output (5 similar outputs)

Impedance	<50 Ω (40 mA max.)
"1"	+4 V
"0"	-1 V
Delay	<15 ns
Risetime	<15 ns (step input)

Power Required

+12 V 50 mA (250 mA max.)	pin 16.
-12 V 20 mA	pin 17.
Ground	pin 34.

[1] See CC 5-9 for logic voltage levels.

HGJ/mlr

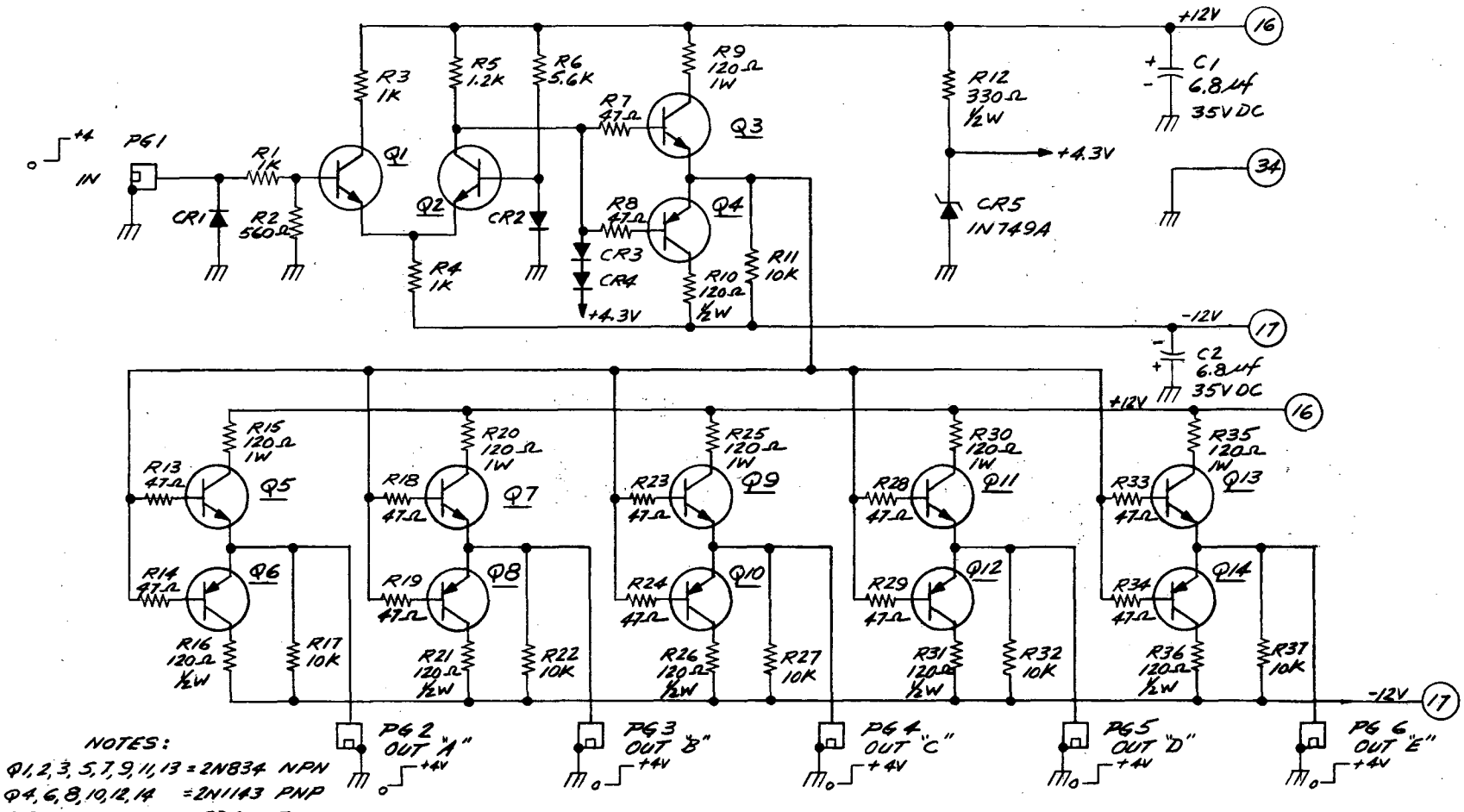

NOTES:

1. Q1, 2, 3, 5, 7, 9, 11, 13 = 2N834 NPN
2. Q4, 6, 8, 10, 12, 14 = 2N1143 PNP
3. CR1, 2, 3, 4 = FDG1147
4. ALL OTHER RESISTORS ARE ¼W CARBON 5% UNLESS NOTED.

Fig. 2 - Schematic 5-Way Fanout

File No. CC 3-16 (2)

File No. CC 4-6 (1)
June 8, 1964
D. O. Hale

Lawrence Radiation Laboratory, University of California, Berkeley

COUNTING NOTE

SUMMARY OF PULSE HEIGHT ANALYZER MANUFACTURERS' DATA

The following table lists manufacturers' specifications for several Pulse Height Analyzers. Only those modes of operation that are considered somewhat standard have been listed, and special application features such as peak detection, area integration and time of flight have been ignored. The information was obtained from instruction manuals and advertising brochures.

Since all the units have not been evaluated, the table is for informational purposes only and does not constitute approval or disapproval.

DOH:mt

PHA MANUFACTURER MODEL	NUMBER OF CHANNELS	COUNT CAPACITY PER CHANNEL	RANDOM ACCESS INPUTS		MEMORY SUBGROUPS & TRANSFER	ZERO SUPPRESSION CONTROL	DATA LOGIC	MEMORY ACCESS TIME	DEAD TIME	DEAD TIME METER
			EXTERNAL DATA ACCESS	EXTERNAL ADDRESS ACCESS						
ND-101	256	10^5	Serial	Serial Parallel	2 or 4 Manual or Pulse	Yes	Add Sub	Min 12 μsec Max 60 μsec[1]	.5 μsec per channel + Memory Access Time	No
ND-180FMR	512	10^6	Serial	Serial	2 or 4 Manual or Pulse	Yes	Add Sub	25 μsec	.5 μsec per channel + Memory Access Time	Yes
PACKARD 15 - 16	400	10^5-10^6	Serial	Serial	2 or 4 Manual or Pulse	Yes	Add Sub Ext	12 μsec	.5 μsec per channel + Memory Access Time	Yes
RIDL 34-12	400	10^5-10^6	Serial	Serial Parallel	2 or 4 Manual or Pulse	Yes	Add Sub	12 μsec	.5 μsec per channel + Memory Access Time	Yes
RIDL 34-12B	400	10^5-10^6	Serial	Serial Parallel	2 or 4 Manual or Pulse	Yes	Add Sub Ext	12 μsec	.5 μsec per channel + Memory Access Time	Yes
RCL 20631	400	10^5-10^6	Not Listed	Not Listed	2 or 4 Manual or Pulse	Yes	Add Sub	12 μsec	.5 μsec per channel + 10 μsec + Memory Access Time	No
TMC 401	400	10^6	Serial	Serial	2 or 4 Manual or Pulse	Yes	Add Sub	39 μsec	.2 μsec per channel + Memory Access Time	No
VICTOREEN ST200	200	10^5	Parallel	Parallel	2 or 4 Manual or Pulse	Yes	Add Sub	15 μsec	.5 μsec per channel + Memory Access Time	No
VICTOREEN ST400uc	400	10^6	Serial Parallel	Serial Parallel	2 or 4 Manual or Pulse	Yes	Add Sub	15 μsec	.5 μsec per channel + Memory Access Time	Yes
VICTOREEN ST800	800	10^6	Serial Parallel	Serial Parallel	8-4-2 Manual or Pulse	Yes	Add Sub	15 μsec	.5 μsec per channel + Memory Access Time	No

[1] Dead Time Varies (12 μsec plus 12 μsec per data decade shift).

[2] Signal jack labels indicated where possible.

PHA MANUFACTURER MODEL	STORE MODES			READOUT MODES						INPUTS MULTI-SCALER MODE[2]		
	MULTI-CHANNEL ANALYZER	MULTI-CHANNEL SCALER	SINGLE CHANNEL ANALYZER	CRT	SERIAL PRINTERS	PARALLEL PRINTERS	RECORDERS	PUNCHED TAPE	MAG TAPE	ADDRESS ADVANCE	DATA INPUT	GATE
ND-101	Yes	Yes	No	External	Yes	No	Yes	No	No	+4 V + 0 -4 V 100 μsec	Amp or Direct	Coinc. (Data only)
ND-180FMR	Yes	Yes	No	External	Yes	Yes	Yes	Yes	No	-4 + 0 + 1 V	Ext is -4 V + 0 +4 V	--
PACKARD 15 - 16	Yes	Yes	No	Internal	Yes	Yes	Yes	Yes	Yes	-10 V	-10 V	--
RIDL 34-12	Yes	Yes	Yes	Internal	Yes	Yes	Yes	Yes	Yes	OSC -10 V	DET -10 V	DET GATE -15 (off) DC
RIDL 34-12B	Yes	Yes	Yes	Internal	Yes	Yes	Yes	Yes	Yes	OSC -10 V	DET -10 V	DET GATE -15 (off) DC
RCL 20631	Yes	Yes	Yes	External	Yes	Yes	Yes	Yes	No	-10 V	+10 V	--
TMC 401	Yes	Yes	No	Internal	Yes	Yes	Yes	Yes	-	+4 V	--	--
VICTOREEN ST200	Yes	No	No	Internal	Yes	Yes	Yes	Yes	No	--	--	--
VICTOREEN ST400uc	Yes	Yes	Yes	Internal	Yes	Yes	Yes	Yes	No	Scaler Advance -5 V	Strobe -2 V	--
VICTOREEN ST800uc	Yes	Yes	No	Internal	Yes	Yes	Yes	Yes	Yes	-8 V 25 μsec	Same as PHA Modes	Coinc. (Data only)

PHA MANUFACTURER MODEL	INPUTS PHA MODE[2]						SINGLE CHANNEL MODE			
	AMPLIFIER	DIRECT	COINC	ANTI-COINC	DC GATE	ROUTING	LOWER LEVEL RANGE	UPPER LEVEL RANGE	MULTI-CHANNEL INPUT	PHYSICS POOL EQUIPMENT
ND-101	-2 mV Full Scale @ Max Gain	-3 +100V	-3V (Off) +3V (On) DC	Same as Coinc.	Same as Coinc.	-4V + 0 +4V DC	-	-	-	No
ND-180FMR	0-100 mV	-3V +10V +100V	-4V (Off) +4V (On)	Same as Coinc.	Same as Coinc.	+4V DC	-	-	-	No
PACKARD 15 - 16	+20 mV Full Scale @ Max Gain	+8V	Prompt Delayed -8V	Prompt Delayed +8V	Blocking +8 (Off)	Not Listed	-	-	-	No
RIDL 34-12	+25 mV Full Scale @ Max Gain	+6V +60V	Prompt Delayed -10V	Prompt Delayed +10V	Blocking +8V (Off)	+10V	15% of Full Scale	80% of Full Scale	Same as PHA Mode	Yes
RIDL 34-12B	+25 mV Full Scale @ Max Gain	+6V +60V	Prompt Delayed -10V	Prompt Delayed +10V	Blocking +8 (Off)	+10V	100% of Full Scale	80% of Full Scale	Same as PHA Mode	Yes
RCL 20631	-10 mV Full Scale @ Max Gain	+5V +15V +60V	Single Channel Mode	-	-	Not Listed	100% of Full Scale	100% of Full Scale	Same as PHA Mode	No
TMC 401	50 mV Full Scale @ Max Gain	+15 V	+4 V	+4V	-	+4V	-	-	-	No
VICTOREEN ST200	Requires Pre-amp	-	-	-	-	Auto	-	-	-	No
VICTOREEN ST400uc	-.5V Full Scale @ Max Gain	+8V +80V	Pulse Coinc. -5V	Pulse Coinc. +5V	-	+10V	100% of Full Scale	100% of Full Scale	Same as PHA Mode	Yes
VICTOREEN ST800	Requires Pre-amp	-	Prompt Delayed -5V	Prompt Delayed +5V	-	Auto	-	-	-	No

Radiation Laboratory, University of California, Berkeley

File No. CC5-6
Page 1
April 10, 1956
Frank Evans
Quentin Kerns
Dick Mack
Revised Jan. 1, 1959

COUNTING NOTE

DEFINITIONS OF PERFORMANCE MEASUREMENT

There is a need for conveniently evaluating the performance of equipment for which the rise time is an important factor. The definitions need to be characteristic of the equipment itself and not of the input signal. The following definitions are suggested as a way of quantitatively measuring the performance of circuits with available equipment. The ratios in signal levels are defined in terms that lend themselves to convenient measurement. The shortest useful pulse for a piece of equipment is taken as a characteristic of the equipment. Two such pulses are defined below. However, none of the definitions are meant to exclude measurements which owing to suitable statistical techniques, may yield results that are a small fraction of times defined here.

A Sigma Pulse is a pulse of constant amplitude which when applied to a circuit produces an output whose peak amplitude is 50% of the output for a long input pulse.

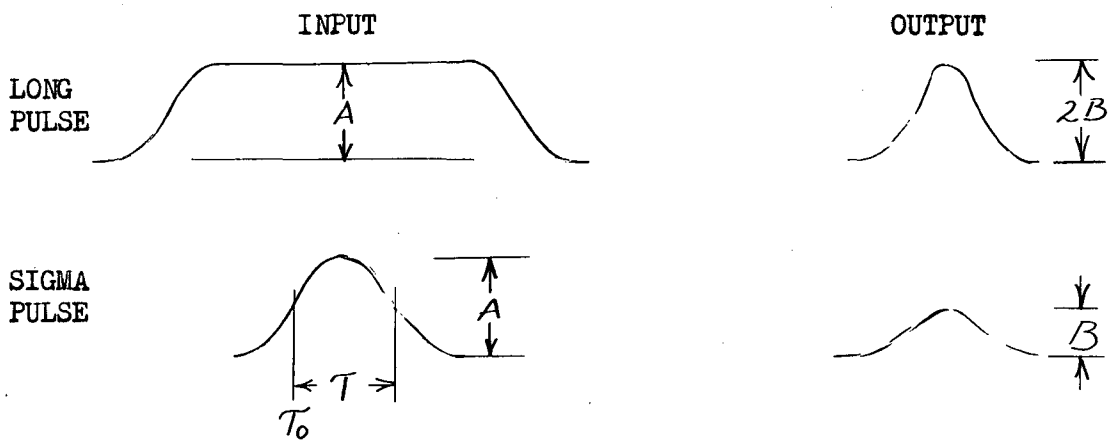

The sigma pulse is specified by two numbers: (a) the length τ in seconds and (b) the amplitude A, in volts. The time of occurrence τ_0 is taken as that instant on the rise when the amplitude reaches 50% peak amplitude.

For an amplifier the amplitude (A) is chosen as the value of the long input signal required to produce maximum unsaturated output (2B).

For a coincidence circuit the amplitude (A) is the minimum value of a long input signal required for normal maximum output (2B).

A Lambda Pulse is defined for a triggered device and is a pulse whose amplitude (A) is twice the amplitude of the long pulse required to just trigger, and whose length is short enough so the device triggers on just half the input pulses, on the average.

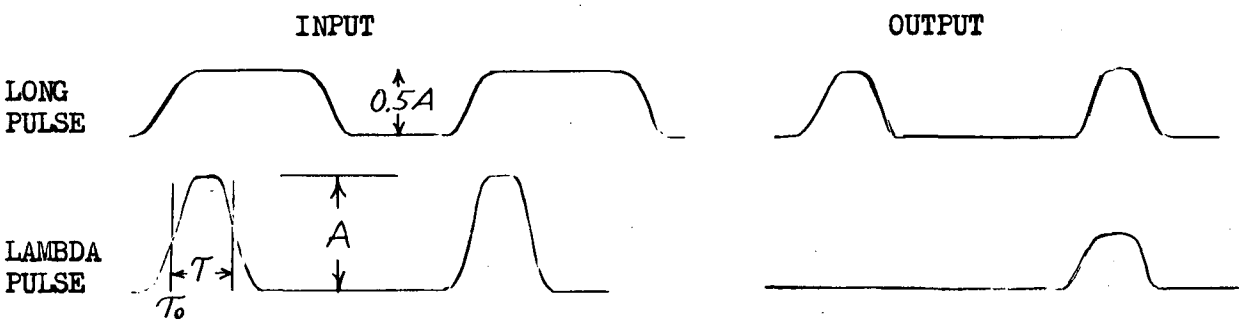

A lambda pulse is specified by two numbers: (a) the length τ in seconds and (b) the amplitude A in volts. The time of occurrence τ_0 is taken as that instant on the rise when the amplitude reaches 50% peak amplitude.

Where operating characteristics of equipment are not otherwise known, sigma pulses are of the correct order of magnitude to apply to a unit to obtain its fastest operating parameters.

In the laboratory a sigma pulse may be produced by a coaxial mercury-relay pulser. The length of the pulse is determined from the double transit time of the discharge line.

The pulse length for a discharge line of RG-8/U cable connected to a mercury pulser is τ_p millimicroseconds.

If we define

L = length of discharge line in inches, measured 0.25 inch behind the extreme front edge of a type N connector,

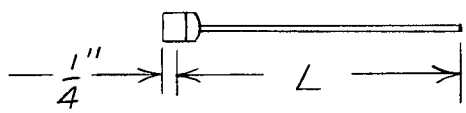

β = relative velocity of propagation of line

β = 0.659 for RG-8/U and RG-9/U, recommended for use in mercury pulser,

C = velocity of light = 1.180×10^{10} inches/sec. in free space,

τ_s = mercury relay pulse length without discharge line attached, millimicroseconds,

τ_s = 0.38 for mercury pulser, Drawing No. 4V 4333,

τ_s = 0.49 for mercury pulser, Drawing No. 1X 6693,

Then we have

$$\tau_p = \frac{2L \cdot 10^9}{\beta C} + \tau_s$$

τ_p = 0.26 L + 0.38 for Pulser 4V 4333,

τ_p = 0.26 L + 0.49 for Pulser 1X 6693,

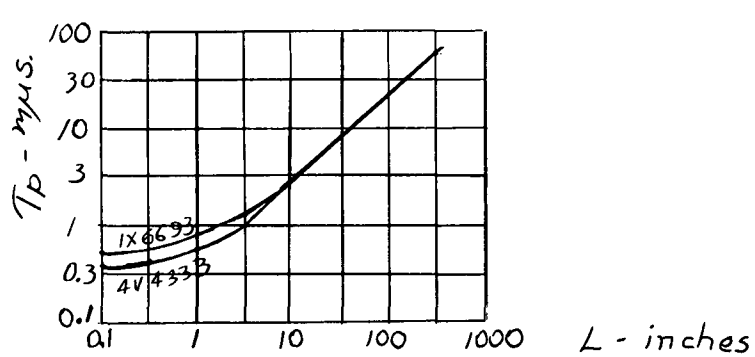

Delay time is the interval between the sigma pulse applied to a circuit and the leading edge (at 50% amplitude) of the unsaturated output signal.

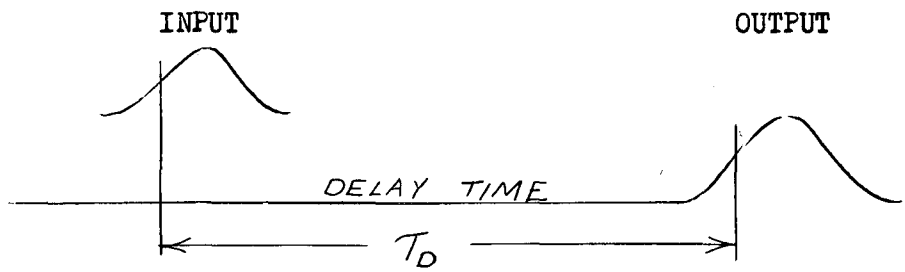

Coincidence ratio is the ratio of the amplitude of output signal of a coincidence circuit when all inputs are fed sigma pulses in time coincidence, to the amplitude of the output signal when one of the input signals is absent.

For a coincidence - anticoincidence circuit the coincidence ratio is the ratio of the amplitude of the output signal when all coincidence input signals are in time coincidence, and anticoincidence signals are absent, to the amplitude when one coincidence signal is absent or one anticoincidence signal is present.

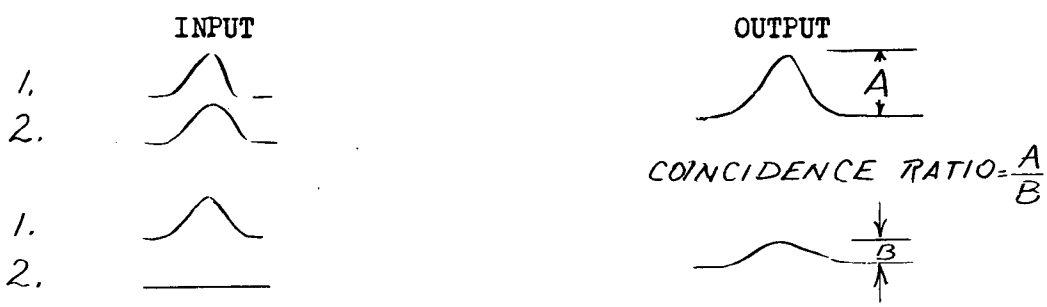

Coincidence time of a coincidence circuit is the minimum time delay required between one input sigma pulse and the remaining input sigma pulses to reduce the output amplitude response to 50% of the amplitude for zero delay, or, for a coincidence circuit, including an amplitude discriminator, the coincidence time is the minimum time delay required to reduce the counting rate of the output pulse to 50%. Resolution time of a coincidence system is often defined as the time delay required between input pulses to produce a change in counting rate by one or two decades.

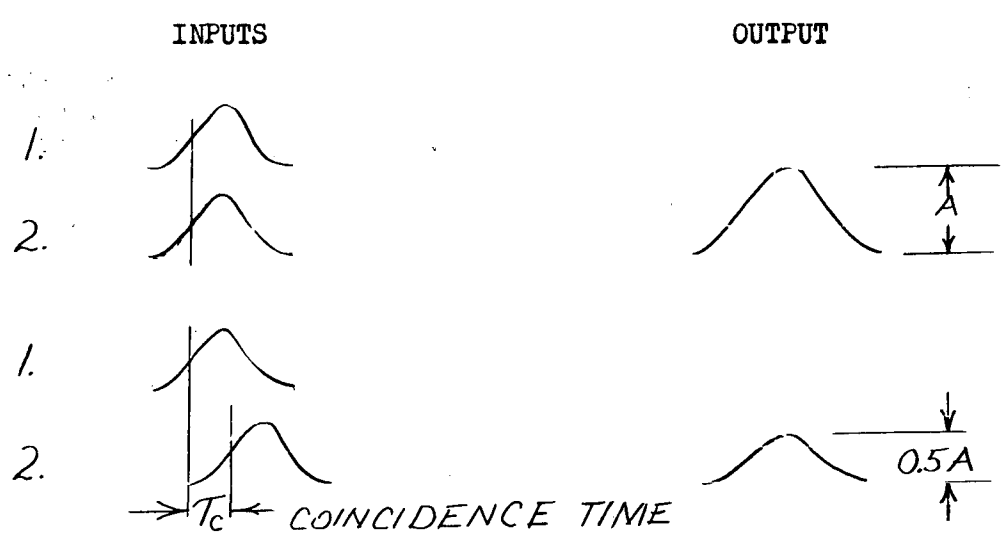

*Anticoincidence time of an anticoincidence circuit is the time delay required between an input sigma pulse in the anticoincidence channel and input sigma pulses in the coincidence channels to reduce the output amplitude response to 50% of the amplitude for a very large delay.

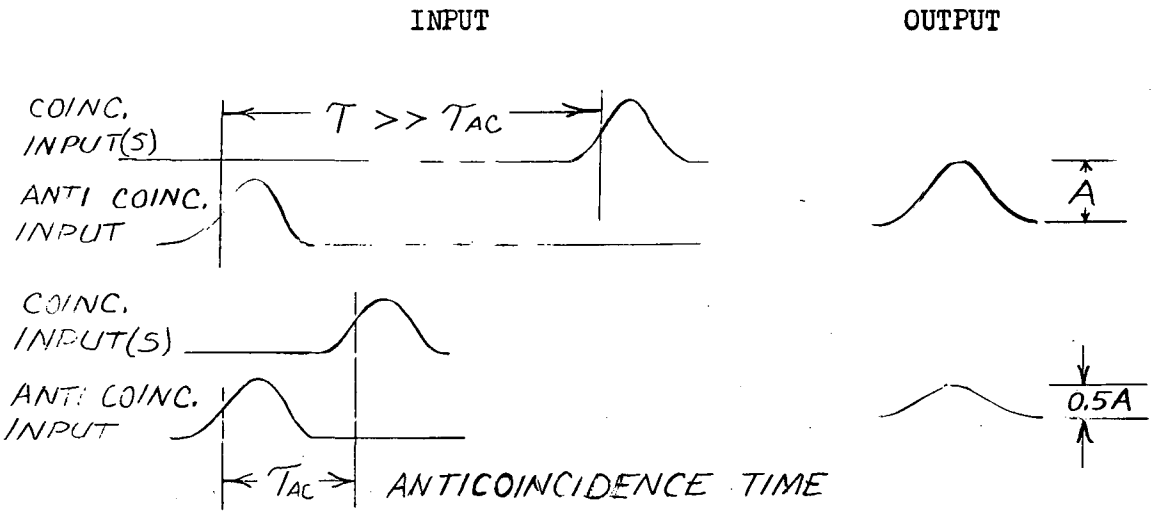

Recovery time is the minimum interval between the leading edges of two consecutive sigma pulses such that the trough between the output pulses is 50% or less of the peak amplitude A_1 of the first pulse, and the peak amplitude of the second pulse A_2 is at least equal to the amplitude of the first pulse A_1.

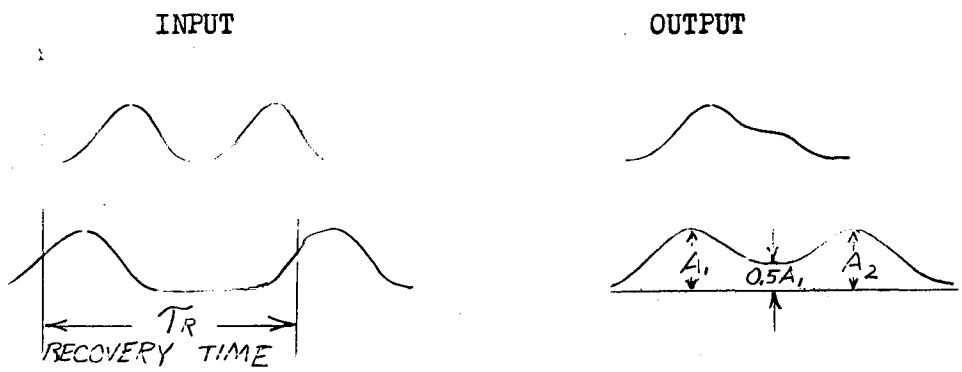

*Recovery time of an anticoincidence circuit is the minimum interval between input sigma pulses (one in the anticoincidence channel and the others all applied at the same time to the coincidence channels) which gives essentially the same output signal (A) as when the anticoincidence signal is absent.

* In general two figures will arise (one when the anti signal is early, and one when it is late); both of these figures should be specified.

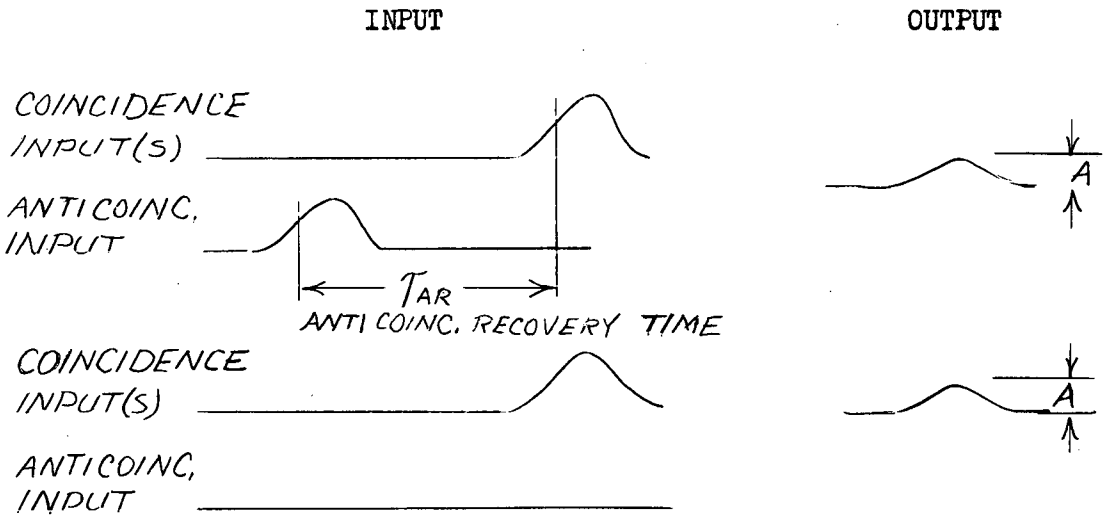
INPUT
OUTPUT
COINCIDENCE INPUT(S)
ANTICOINC. INPUT
A
T_{AR}
ANTI COINC. RECOVERY TIME
COINCIDENCE INPUT(S)
A
ANTICOINC. INPUT

April 10, 1956
Quentin Kerns
Dick Mack

COUNTING NOTE

DEFINITION OF PULSE TERMS

The following definitions have been compiled from accepted sources covering pulse terminology commonly encountered at the laboratory.

Background counts[2] are counts caused by radiation coming from sources external to the counter tube other than the source being measured, or by radioactive contamination of the counter tube itself.

A clipping line[2] is a circuit for eliminating the tail of an electrical pulse after a predetermined time.

Counting rate is the average number of pulses per unit of time.

A linear amplifier is a pulse amplifier in which the output pulse height is proportional to an input pulse height for a given pulse shape up to a point at which the amplifier overloads. Most linear amplifiers only approximately fulfill this definition.

A pulse is a momentary flow of energy.

A pulse amplifier[2] is an amplifier, designed specifically to amplify the intermittent signals incorporating appropriate pulse-shaping characteristics.

Pulse amplitude[1] is a term indicating the largest magnitude attained during the pulse.

Pulse decay time is the time required for an exponentially decaying pulse to fall to 1/e of the peak amplitude.

Pulse fall time[2] is the time required for the instantaneous amplitude to fall from 90% to 10% of the peak amplitude.

A pulse-height discriminator[2] is a circuit designed to select and pass voltage pulses of a certain minimum amplitude.

A pulse-height selector[2] is a circuit designed to select and pass voltage pulses in a certain range of amplitudes.

Pulse rise time[2] is the time required for the amplitude to rise from 10% to 90% of the peak amplitude.

A random coincidence[2] is one that is due to the fortuitous occurrence of unrelated counts in the separate detectors.

A register[2] is an electromechanical device for recording or registering counts.

Saturation current[2] is the current which results when the applied potential is sufficient to collect all electrons.

Saturation voltage[2] is the minimum value of applied potential required to produce saturation current.

A scaler[2] is a device that produces an output pulse whenever a prescribed number of input pulses have been received. The number of input pulses per output pulse of

a scaling circuit is termed the scaling factor. A binary scaler is a scaler whose scaling factor is two. A decade scaler is a scaler whose scaling factor is ten.

(1) Standards on Pulses: Definition of Terms, Proc. I.R.E., Vol. 39, p. 624, June 1951.

(2) A Glossary of Terms in Nuclear Science and Technology, Published by A.S.M.E., 1955.

File No. CC 5-8B (1)
F. Kirsten, Q. Kerns
Rev. November 25, 1966
C. Kerns

Lawrence Radiation Laboratory, University of California, Berkeley

COUNTING NOTE

DEFINITIONS OF TERMS RELATED TO PHOTOTUBES

PART I

(1) IRE Standards on Electron Devices: Definitions of Terms Related to Phototubes, 1954, as published in the Proc. IRE, 42, 1277, August 1954.

(2) IRE Standards on Electron Tubes: Methods of Testing, 1962, as published in the "IRE Standards No. 62 IRE 7.S1."

PHOTOTUBE (1)

An electron tube that contains a photocathode, and has an output depending at every instant on the total photoelectric emission from the irradiated area of the photocathode.

MULTIPLIER PHOTOTUBE (1)*

A phototube with one or more dynodes between its photocathode and the output electrode.

PHOTOCATHODE (1)

An electrode used for obtaining photoelectric emission when irradiated.

SEMI-TRANSPARENT PHOTOCATHODE (1)

A photocathode in which radiant flux incident on one side produces photoelectric emission from the opposite side.

QUANTUM EFFICIENCY (Of a Phototube) (1)

The average number of electrons photoelectrically emitted from the photocathode per incident photon of a given wavelength.

SENSITIVITY (Of a Photosensitive Electron Device) (2)

The quotient of the output quantity (such as current, voltage, etc.) by the incident radiant flux or flux density under stated conditions of irradiation.

Note 1: This term is general and the measured value depends on many factors such as spectral distribution of incident light, units used for measuring incident radiation, electrode under consideration, and output quantity. In several specific types of sensitivity the conditions of the test are more restricted. Where a well-defined specific sensitivity term is not applicable, care must be taken to state all the pertinent conditions under which sensitivity is measured.

Note 2: If the output has some value in the dark, the dark value is subtracted from the output when irradiated.

---

*The terms Multiplier Phototube and Photomultiplier are equivalent and are used interchangeably.

SENSITIVITY, DYNAMIC (Of a Phototube) (2)

The quotient of the modulated component of the output current by the modulated component of the incident radiation at a stated frequency of modulation. Note: Unless otherwise stated the modulation waveshape is sinusodial.

SENSITIVITY, RADIANT (Camera Tubes or Phototubes) (2)

The quotient of signal output current by incident radiant flux under specified conditions of irradiation.

Note 1: Radiant sensitivity is usually measured with a collimated beam at normal incidence.

Note 2: The incident radiant flux is usually monochromatic at a given wavelength. If the radiant flux is not monochromatic, its source must be described.

LUMINOUS SENSITIVITY (Of a Phototube) (1)

The quotient of output current by incident luminous flux at constant electrode voltages.

Note 1: The term output current as here used does not include the dark current.

Note 2: Since luminous sensitivity is not an absolute characteristic but depends on the spectral distribution of the incident flux, the term is commonly used to designate the sensitivity to light from a tungsten-filament lamp operating at a color temperature of 2870°K.

CATHODE LUMINOUS SENSITIVITY (Of a Multiplier Phototube) (1)

The quotient of photocathode current by incident luminous flux.

Note 1: The term photocathode current as here used does not include the dark current.

SPECTRAL CHARACTERISTIC (Of a Phototube) (1)

A relation, usually shown by a graph, between the radiant sensitivity and the wavelength of the incident radiant flux.

ELECTRODE DARK CURRENT (Of a Phototube) (1)

The electrode current that flows when there is no radiant flux incident on the photocathode.

Note 1: Since dark current may change considerably with temperature, temperature should be specified.

EQUIVALENT DARK-CURRENT INPUT (1)

The incident luminous flux that would be required to give an output current equal to the dark current.

Note 1: Since dark current may change considerably with temperature, temperature should be specified.

EQUIVALENT NOISE INPUT (Of a Phototube) (2)

The value of incident luminous (or radiant) flux which, when modulated in a stated manner, produces an rms signal output current equal to the rms dark-current noise both in the same specified bandwidth (usually 1 cps).

CURRENT AMPLIFICATION (Of a Multiplier Phototube) (1)

The ratio of the output current to the photocathode current due to photoelectric emission at constant electrode voltages.

Note 1: Terms output current and photocathode current as here used do not include dark current.

Note 2: This characteristic is to be measured at levels of operation that will not cause saturation.

GAS AMPLIFICATION FACTOR (Of a Gas Phototube) (1)

The ratio of radiant or luminous sensitivities with and without ionization of the contained gas.

TRANSIT TIME (Of a Multiplier Phototube) (2) (See also Part II LRL definitions.)

The time interval between the arrival of a delta function light pulse at the entrance window of the tube and the time at which the output pulse at the anode terminal reaches peak amplitude.

TRANSIT TIME SPREAD (2) (See also Part II LRL definitions.)

The time interval between the half-amplitude points of the output pulse at the anode terminal, arising from a delta function of light incident on the entrance window of the tube.

PART II

LRL MULTIPLIER PHOTOTUBE DEFINITIONS

The definitions contained in Part II are divided into three groups. Group 1 of the definitions and standards is intended to provide a convenient way of estimating the usefulness of multiplier phototubes for precision timing applications. It defines quantities which when evaluated for a particular tube, give a measure of its spread or uncertainty in delay time. The spread or uncertainty in the delay time of a phototube pulse is a function of the size of the light signal as well as of parameters of the tube. Group 1 definitions refer to the overall tube.

In Group II, we consider separately:

a) the cathode to first dynode region
(input electron optics)

b) the multiplier
(set of dynodes)

c) the output structure
(consists of signal-carrying leads from the anode and adjacent structures to the output pins or connector).

The function of the input electron optics (a) is to cause electrons emitted from the relatively large photocathode, to be directed into the multiplier. The multiplier (b) and output structure (c) are often considered together as a unit but should be considered separately in the case of multiplier tubes with coaxial output structures or slow-wave, i.e., (TW) output structures. The output structure forms the output signal pulse by extracting energy from the moving cloud of electrons leaving the last dynode.

To apply these definitions and standards to a particular tube, the operating voltage and voltage distribution must be specified.

Group I definitions are adequate for many users. Group II definitions added to Group I form a set intended for detailed discussion and evaluation of phototubes.

To aid in understanding these definitions related to phototubes, a brief outline is given to place them in one of six general categories of expressions directly concerned with time.

TIME CATEGORIES*	PHOTOTUBE TERMS**
Rise Time	DEVICE RISE TIME (DRT) MULTIPLIER RISE TIME (MRT) OUTPUT STRUCTURE RISE TIME (ORT)
Fall Time	MULTIPLIER FALL TIME (MFT)
Delay Time	DEVICE DELAY TIME (DDT) MULTIPLIER DELAY TIME (MDT)
Transit Time	DEVICE TRANSIT TIME (DTT) CATHODE TRANSIT TIME (CTT) MULTIPLIER TRANSIT TIME (MTT) OUTPUT STRUCTURE TRANSIT TIME (OTT)
Time Spread	DEVICE TIME SPREAD (DTS) PULSE TIME SPREAD (PTS) CATHODE TIME SPREAD (CTS) MULTIPLIER TIME SPREAD (MTS)
Transit-Time	CATHODE TRANSIT TIME DIFFERENCE (CTTD) INTERDYNODE TRANSIT TIME DIFFERENCE (DTTD)

Rise Time as defined in CC 5-7 is the time required for the amplitude to rise from 10% to 90% of the peak amplitude.

Fall Time as defined in CC 5-7 is the time required for the instantaneous amplitude to fall from 90% to 10% of the peak amplitude.

Delay Time, in accordance with the usage of CC 5-6 is defined as the time interval between input and output as measured on the leading edge (at 50% amplitude) for an individual event. For the user, Transit Time is a much more useful quantity than Delay Time, which is of interest primarily in phototube measurement technique.

Transit Time is the average of the Delay Times measured for many events. It should be noted that transit times add linearly to get overall transit time and are independent of the number of electrons.

Time Spread is the standard deviation of the distribution of Delay Times. Time Spreads add in an RMS fashion to get overall time spreads. Time Spreads vary in proporation to the inverse square root of the number of photoelectrons. They are given for single photoelectron events.

An alternative method of expressing Time Spread, is one which does not assume a Gaussian curve, but considers how the area under the time-spread curve is distributed. Using this method, one would define as the significant parameter the minimum width of time slot which (properly centered), permits some percentage (e.g., 50%) of all output pulses to be counted. (For more information and actual values measured see UCRL-16540, Photomultiplier Single-Electron Time-Spread Measurements, by Cordon R. Kerns, October 3, 1966.)

---

* Note differences between LRL definitions and the IRE Standards in Part I of this report.

** It is assumed that one is discussing a phototube which is not allowed to current saturate unless otherwise stated.

Time Spread (Continued)

A certain freedom is taken in assuming that the distributions referred to in the phototube definitions may be approximated by Gaussian curves. However, the relative ease in combining Gaussian distributions compensates for this. The deviation of a distribution is often specified in terms of its full width at half maximum (FWHM). For a Gaussian distribution the FWHM is equal to 2.36 times the standard deviation.

Transit-Time Difference expresses a systematic relationship between Transit-Time and position of illumination by photons or electrons. If we let (X,Y,Z) express the Cartesian coordinates of a point X, Y, Z on the photocathode or dynode, as the case may be:

Transit-Time Difference at point (X,Y,Z) = Transit Time at point (X,Y,Z) - Transit Time at point (X_0,Y_0,Z_0)

where point X_0,Y_0,Z_0 is the reference position, and point (X,Y,Z) is the position where illumination strikes.

Transit-Time Difference may apply to electron trajectories in the photocathode-to-first dynode region or to electron trajectories in the region from one dynode to the next dynode. Although the Transit-Time Difference is found as the average of many events and is, therefore, independent of the number of electrons, the effect of Transit-Time Difference on the overall tube time spread varies as (number of electrons)$^{-1/2}$. For simplicity, the transit-time differences may be included in the time-spreads, e.g. CTTD is included in CTS.

Group III of these definitions and standards covers aspects of tube operations other than terms involving timing.

GROUP I

DEVICE RISE TIME (DRT)

The device rise time is the mean time difference between the 10% and 90% points on the rise of the output voltage pulse for full cathode illumination by a short pulse of light. DRT includes the effects of Output Structure Rise-Time, Multiplier Rise-Time, time spreads, and time differences.

DEVICE DELAY TIME (DDT)

The delay time from the instant at which a light pulse strikes the envelope of the tube on its way to a given area of the cathode until the corresponding output pulse appears at the output connector of the tube is the device delay time for that area of the cathode. In accordance with the other definitions, the output pulse is timed with respect to the 50% point of its leading edge. Unless otherwise stated, it is assumed that figures quoted for this quantity refer to the geometrical center of the useful cathode area.

GROUP I (Continued)

DEVICE TRANSIT TIME (DTT)

The average difference between the time at which an impulse of light strikes the envelope of a phototube on its way to the cathode and the time at which some specified point on the output pulse from the anode appears at the base pins or output connector of the tube. Neglecting the time of flight of light through the entrance window:

$$(DTT) = (CTT) + (MTT) + (OTT)$$

Quotations of transit time should include specification of the point on the output pulse to which the time measurements are made, such as the 50% peak amplitude point of the leading edge, centroid of the pulse, etc. Unless otherwise stated, all transit-time figures given in the Counting Handbook are referred to the 50% of peak amplitude point on the leading edge of the pulse.

DEVICE TIME SPREAD (DTS)

When light signals result in the production of single photoelectrons from randomly chosen areas of the photocathode, the corresponding anode delay times have a distribution about some mean value. The standard deviation of this distribution is the device time spread.

The device time spread may be measured by allowing light signals to produce single photoelectrons at known times, and to measure by means of an appropriate time coincidence circuit, the relative number of output pulses that occur in each unit interval following the light signal. Alternatively, the figures for cathode time spread (CTS) and multiplier time spread (MTS) may be combined (assuming that the distributions are Gaussian) to give the DTS of the tube as:

$$DTS + \sqrt{CTS^2 + MTS^2}$$

PULSE TIME SPREAD (PTS)

When light signals producing other than one photoelectron are used, the standard deviation of a Gaussian curve fitted to the distribution of delay times is approximately:

$$PTS = 1/\sqrt{N} \qquad DTS = 1/\sqrt{N} \qquad \sqrt{CTS^2 + MTS^2}$$

where N = the number of photoelectrons emitted per light pulse.

The purpose of the Group I terms is to describe the overall phototube in compact fashion. Where more detail is necessary, the Group II terms may be employed.

GROUP II

CATHODE TRANSIT TIME (CTT)

The mean delay time from the cathode to the first dynode of photoelectrons emitted from a given area of the photocathode is the cathode transit time for that particular area. Unless otherwise specified, it will be assumed that figures quoted for this quantity refer to the geometrical center of the useful cathode area.

CATHODE TRANSIT-TIME DIFFERENCE (CTTD)

In general, the transit time for electrical output pulses resulting from light pulses striking small areas of the photocathode is a function of the position on the cathode at which the light pulses strike. The cathode transit-time difference for a certain specified area of the cathode is the transit time for light pulses striking that area minus the transit time for light pulses striking a reference area of the cathode. When applicable, the reference area is at the geometrical center of the useful photocathode area as specified by the manufacturer.

A note on technique:

In making CTTD measurements, the diameter of the area illuminated is to be small compared to the distance over which an appreciable change in CTTD occurs. Normally CTTD is influenced primarily by the voltages applied to the cathode, cathode focusing electrodes (if any), and the first few dynodes. These voltages should be specified since CTTD varies as the inverse square root of voltage.

Of course, a large value of CTTD is undesirable. The cathode shape and cathode to dynode optics are important parameters for the manufacturers to optimize in order to minimize CTTD over the range of operating voltage.

CATHODE TIME SPREAD (CTS)

When single photoelectrons are emitted from randomly chosen areas of the photocathode, their respective delay times from the cathode to the first dynode have a distribution about some mean value. The standard deviation of a Gaussian curve fitted to this distribution is the cathode time spread.

The CTS results from two separate effects: cathode transit time differences, q.v., and spread in the initial emission velocities of photoelectrons. The spread in initial velocity depends upon the wavelength of the incident illumination, the photoelectric work function, and the temperature.

If the cathode transit-time difference is large, the approximate value of cathode time spread may be derived from the cathode transit-time difference curves (by neglecting possible dynode 1 - dynode 2 transit-time differences which are implicit in the cathode transit time differences, and effects due to velocities of emission).

GROUP II (Continued)

MULTIPLIER RISE TIME (MRT)

The multiplier rise time is the mean time difference between the 10% and 90% points on the rise of the current pulses entering the anode region and correlated with the entrance of single electrons into the multiplier. If the ORT << MRT, (as is commonly the case) the MRT can be directly observed at the base pins or output connector of the tube.

MULTIPLIER FALL TIME (MFT)

The multiplier fall time is the mean time difference between the 90% and 10% points on the fall of the current pulses entering the anode region and correlated with the entrance of single electrons into the multiplier. If the ORT << MFT, the MFT can be directly observed at the base pins or output connector of the tube.

MULTIPLIER DELAY TIME (MDT)

The delay time from the instant an electron strikes dynode one until the resulting pulse of charge appears at the anode of the multiplier is the multiplier delay time. In accordance with other definitions the delay is measured to the 50% point on the leading edge of the charge pulse.

MULTIPLIER TRANSIT-TIME (MTT)

The mean value of the multiplier delay time is the multiplier transit time.

INTERDYNODE TRANSIT TIME-DIFFERENCE (DTTD)

In general, the transit time for electrons leaving the nth dynode and striking the $n^{th} + 1$ dynode depends on the position from which electrons leave the nth dynode. The interdynode transit time difference is the transit time for electrons leaving a given position minus the transit time for electrons leaving a reference position. Considering a cartesian coordinate system fixed in the dynode, we identify X, Y, Z as the point of emission and (X_0, Y_0, Z_0) as the reference point. Then: Transit-time difference at point (X,Y,Z) = Transit time at point (X,Y,Z) - Transit-time at point (X_0, Y_0, Z_0).

MULTIPLIER TIME SPREAD (MTS)

When single photoelectrons, spaced in time, strike dynode one, the corresponding output pulses have respective multiplier delay times that are distributed about some mean value. The standard deviation of this distribution is the multiplier time spread.

OUTPUT STRUCTURE RISE TIME (ORT)

The output-structure rise time is the time difference between the 10% and 90% points on the rise of the output voltage pulse arising from a narrow pulse of current striking the last dynode.

It depends on the transit time of electrons across the last-dynode to anode gap, and on the electrical pulse response of the anode-dynode output circuit. The dynode-anode transit time is calculated from geometry and voltage, while the electrical pulse response may be measured by applying pulses to the output circuit of the tube, or on a time-scaled analogue of the output circuitry. The output-structure rise time may be approximated by measuring the response of an illuminated phototube to a fast gating pulse applied to the latter dynode stages. (See CC 8-20.) The output-

GROUP II (Continued)

structure rise time is essentially immune to statistical fluctuations from pulse to pulse, and for most present tubes is short compared to the time spreads CTS and MTS.

OUTPUT STRUCTURE TRANSIT TIME (OTT)

The mean time interval between the entrance of a pulse of charge into the anode region and the appearance of the corresponding electrical pulse at the output connector or pins of the tube is the output structure transit time. In accordance with other definitions, the time interval is measured between the 50% points on the leading edge of the input and output pulses.

GROUP III

DC CURRENT GAIN OF A MULTIPLIER PHOTOTUBE

Identical to definition of Current Amplification, Part I, of this Counting Note.

PULSE CURRENT GAIN

The mean ratio of the charge in the anode (or other, specified, output electrode) current pulse to the charge in photoelectron current pulse leaving the cathode following a pulse of light that uniformly illuminates the useful area of the cathode as specified by the manufacturer.

The time duration of the pulse of light should not be greater than the transit time spread of the phototube. Where the current gain is high enough, it is convenient to make the measurement with single photoelectrons.

In measuring the anode pulse charge, the effects of afterpulses should be disregarded insofar as they can be distinguished from the main pulse.

It is important to note that the pulse current gain, on a pulse to pulse basis, unlike the current amplification, q.v., is a statistically varying quantity.

SATURATED OUTPUT CURRENT

The maximum attainable value of anode (or other, specified, output electrode) current as limited by space-charge saturation between one or more pairs of electrodes. According to Child's Law, this value of current varies as the three-halves power of voltage between the electrodes at which space-charge saturation occurs. Therefore, the saturated output current depends on the voltage distribution in the tubes which must be specified.

The measurement is usually made with a pulsed source of input current to the multiplier, such as a light pulser illuminating the cathode. The intensity of the current from the pulsed source is increased until further increase in input current results in a negligible increase of output current. This level of output current is the saturated output current.

For the purposes of the counting notes, the point of "negligible" increase in output current is that level at which the rate of change of output current with input current is 1% or less of the maximum rate at any other input current.

GROUP III (Continued)

MAXIMUM NON-SATURATED OUTPUT CURRENT*

The saturation of a multiplier phototube is not sudden or abrupt but manifests itself as a gradual process. As saturation progresses, the output pulse amplitude tends to stop increasing, and instead the pulse width increases. For definiteness, the peak pulse current at a 25% increase in pulse width (for a narrow light pulse) at the half-height is taken as the maximum non-satruated output current.

AFTERPULSES

When an externally generated light pulse strikes the photocathode, a pulse of photoelectrons leaves the phototcahode, is successively amplified at each succeeding dynode, and results in an output current pulse at the anode. Following this initial pulse, there may occur other pulses, called afterpulses, which are not caused by any externally generated light pulses, but rather by certain processes initiated by the original pulse.

NOISE PULSES (DARK)

The portion of the Electrode Dark Current, q.v., which appears as individual current pulses.

Electrons released from the cathode by thermionic emission and ion feedback processes are major contributors to the noise pulse rate in multiplier tubes. Additional contributions to the noise pulse rate come from light generated within the tube, thermionic emission from ionization currents, and internal or external radioactivity.

COLLECTION EFFICIENCY

The ratio of the number of photoelections which actually contribute to an anode (or other, specified, output electrode) current pulse to the total number of photoelectrons liberated is called the collection efficiency.

Not all photoelectrons released from the cathode necessarily reach the first dynode. The major contributing causes are chromatic aberration (initial velocity effects) in the photocathode - dynode one electron lens system, and other lens distortions particularly at the photocathode maximum diameter.

Some photoelectrons which do arrive at the first dynode do not necessarily result in an anode current pulse since secondary multiplication is a statistical process.

CK:mt

*See LRL - Engineering Note EE-795 for more information.

File No. CC 5-9A (1)
February 5, 1964
L.B. Robinson
Rev. August 3, 1966

Lawrence Radiation Laboratory, University of California, Berkeley

COUNTING NOTE

PREFERRED LOGICAL VOLTAGE LEVELS DC TO 20 MHZ

A number of logic circuits have recently been designed to employ the following signal voltage levels:

1. The circuit is OPERATIVE or ON at the nominal +4 volt level. This is defined as the logical level ONE.

2. The circuit is INOPERATIVE or OFF at the nominal -1 volt level. This is defined as the logical level ZERO.

Fig. 1 shows the allowable signal voltage excursions for input and output circuits employing standard +4 volt logic levels.

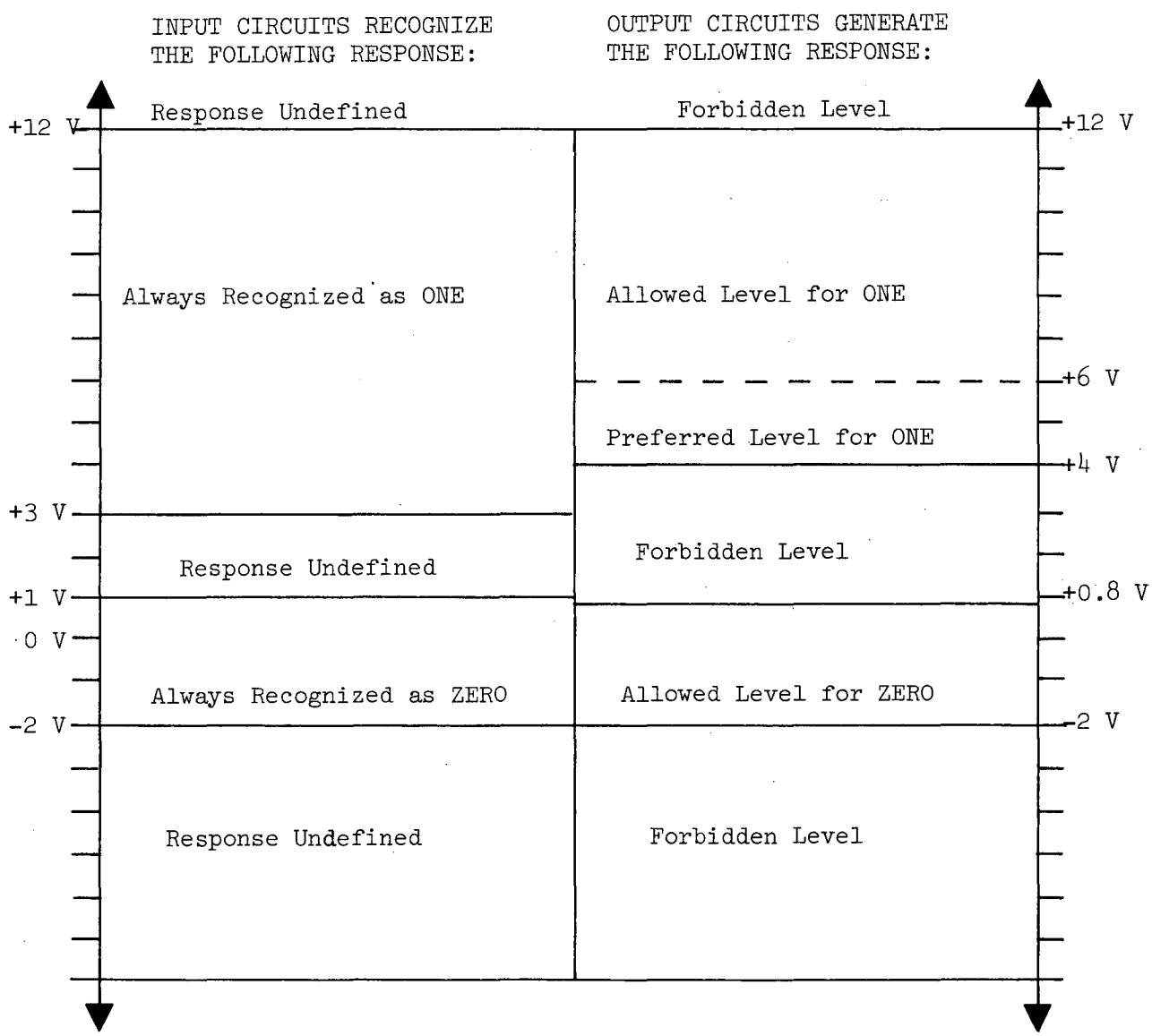

Fig. 1 - Allowable Signal Voltage Excursions

LBR:mt

File No. CC 6-5B (1)
Quentin Kerns & Harold Miller
Revised: November 21, 1966
Harold Miller

Lawrence Radiation Laboratory, University of California, Berkeley

COUNTING NOTE

SPARK GAP TRIGGER AMPLIFIER

I. ABSTRACT

The following trigger amplifier was designed to be used as a building block between low level logic circuits and spark chamber pulse modulators.

Described below is a 4-stage nonlinear amplifier which, when triggered by a 1 V signal, provides with minimum delay, an output pulse of sufficient energy to simultaneously trigger several spark gaps. The output pulse is produced by discharging a 1000 pF capacitance charged to 10 kV into a load. The pulse has a rise time of 10 ns and begins 32 ± 4 ns after the application of the 1 V input pulse. The trigger amplifier will operate at an average repetition rate of 0 to 50 pps and can be triggered in pulse bursts with a minimum of 5 msec between pulses.

II. SPECIFICATIONS

A. Input.

1. Impedance: ~50Ω shunted by 2.8μH.
2. Connector: BNC.
3. Pulse Amplitude: 1 to 10 V.
4. Pulse Width: ≧ 1 nsec.
5. Rise Rate: ≧ 1 V/nsec.

B. Outputs.

1. Impedance: 50Ω.
2. Connectors: Two Type HN.
3. Pulse Amplitude: -10 kV.
4. Pulse Rise Time: 10 nsec.
5. Pulse Decay Time: 25 nsec with both outputs terminated.
   50 nsec with one output terminated.
6. Delay time between the input pulse and the beginning of the output pulse:

32 ± 4 nsec @ 1 pps		
35 ± 5 nsec @ 50 pps		
38 ± 8 nsec @ 100 pps	}	50 pulse bursts.
45 ± 10 nsec @ 200 pps	}	

C. Repetition Rate.

1. 50 pps maximum average rate; any slower rate is acceptable.

2. Up to 50 pulse bursts with a minimum of 5 msec. between pulses with the average rate not exceeding 50 pps. If the average pulse rate exceeds 50 pps for an excessively long interval of time, the SGTA will automatically turn itself off. (See Section III, B 3). (See UCID-2605 H. W. Miller 7-12-65 for complete description of overload-trip circuit).

D. DP-30 Monitor (PG-2).

1. Impedance: 50Ω.

2. Connector: BNC.

3. Pulse Amplitude: -15 V.

E. Output Monitor (PG-3).

1. Impedance: 50Ω.

2. Connector: BNC.

3. Amplitude: -10 V (Approximately 0.1% of the output pulse.)

F. Controls. a.c. on-off-overload reset switch located on the front panel.

G. Electrical Shielding. ≥ 120 db.

H. Power Requirements. 95 - 125 V rms 60 cps.
42 watts @ 0 pps.
54 watts @ 50 pps.

III. DESCRIPTION

Figure 1 shows a front and rear view of the Spark-Gap Trigger Amplifier.

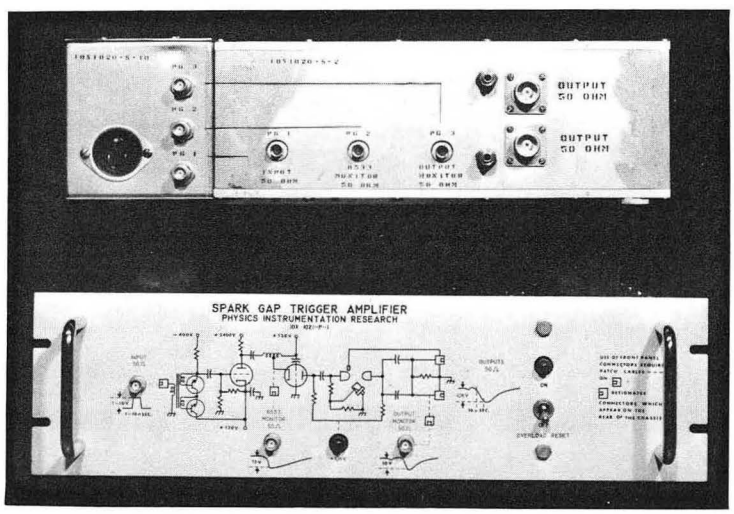

Fig. 1 - Spark-Gap Trigger Amplifier

a) Rear View.
b) Front Panel.

A. Circuit Operation.

A simplified schematic diagram of the Trigger Amplifier appears on the front panel. An additional simplified schematic diagram with components numbered to aid in the discussion of the circuit operation is included in Fig. 2. The numbering system is identical to that used in the complete schematic (10X1020 S-2).

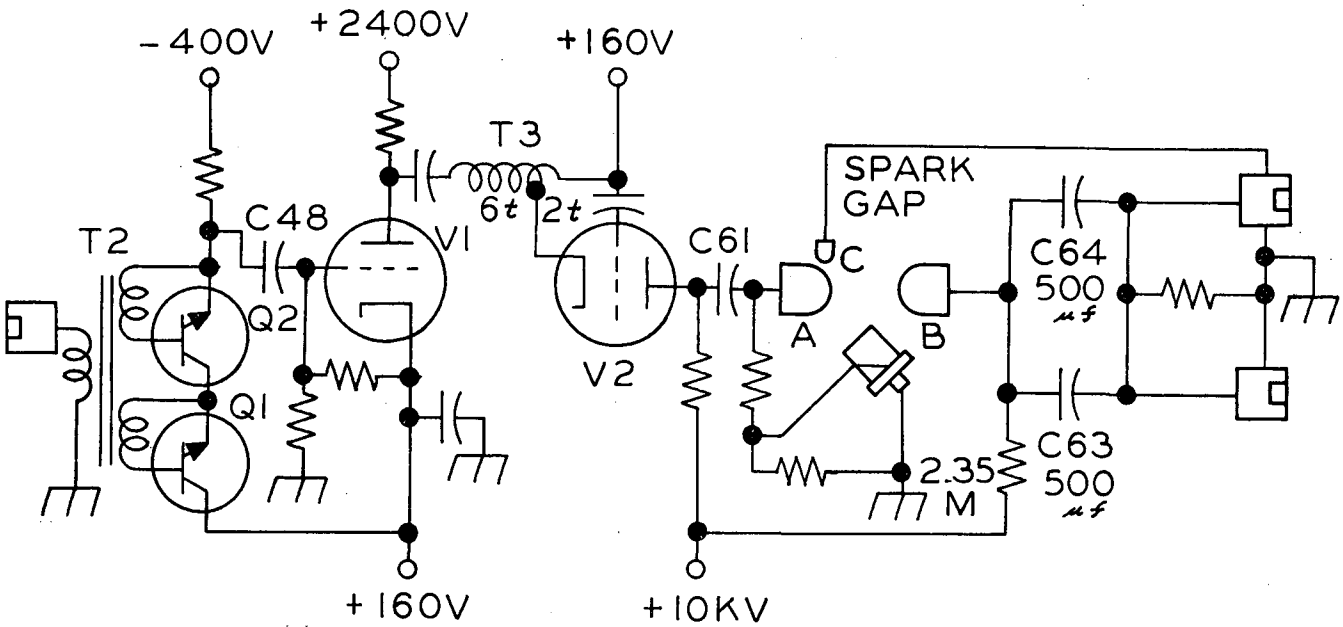

Fig. 2 - Simplified Schematic Diagram

The trigger amplifier consists of four stages of amplification; they are (1) avalanche transistors, (2) common-cathode planar triode, (3) grounded-grid planar triode, and (4) triggered spark gap. Normally all four stages are nonconducting. Upon the application of an input trigger the four stages are progressively pulsed into a high conducting state producing the 10 kV output pulse.

1. Avalanche Transistor Stage.[1]

The avalanche transistors Q-1 and Q-2, biased from a 100 μA current source, are selected such that the sum of their collector voltages is ≥ 200 V. The capacitor C-48 charges to a potential equal to the difference between the transistor collector voltages and the grid-cathode bias voltage of the first planar-triode V-1. Upon the application of a 1 V pulse at their base-emitter junction, the two transistors switch to a low impedance producing a 100 V positive grid drive to V-1.

[1] See, H. W. Miller & Q. A. Kerns, "Note on Transistors for Avalanche-Mode Operation" UCRL-10131 Rev. (May 23, 1962).

2. Common-Cathode Planar-Triode Stage.

With a 100 V positive grid drive on V-1 the tube develops a 4.5 amp current pulse into the primary winding of the coupling transformer T-3. The coupling transformer drives the cathode of the grounded-grid stage with an 18 amp current pulse.

3. Grounded-grid Planar-Triode Stage.

The anode of V-2 is normally at +10 kV; the tube is biased off by a positive 160 V on the cathode. The drive pulse from the coupling transformer T-3 pulses the cathode 170 V negative with respect to the grid, resulting in a 15 amp anode current pulse. The anode potential decreases at a rate of 500 V/nsec., which is determined by the anode current and anode circuit capacitance consisting of the anode-to-grid capacitance, the trigger-electrode capacitance and the stray-circuit capacitance.

4. Triggered-Spark-Gap Stage.

In the non-conducting state electrodes A and C are at ground potential and electrode B is at +10 kV. The spacing between electrodes A and B is adjusted for a dc gap breakdown of 11.5 kV. When the anode voltage of V-2 decreases, the voltage of electrode A begins dropping toward -8 kV. The gap A-B becomes over-voltaged when the voltage on electrode A is -1.5 kV, and if one or more free electrons are available the gap current will begin to build up exponentially. A corona light,[2] which is pulsed by the voltage change on electrode A through a resistance of 2.6 k, illuminates electrode A at the time it reaches -1.5 kV. The ultra-violet component of the light ejects precisely timed photoelectrons from the surface of electrode A, initiating an electron avalanche in gap A-B. As the impedance of gap A-B decreases, the voltage on electrode A approaches the +10 kV potential of electrode B. When electrode A becomes sufficiently ($\sim$5 kV) positive with respect to the grounding electrode C, an electron avalanche is produced in gap A-C. The current in the two series gaps increases until limited by the circuit impedances. The output pulse is produced by capacitors C-63 and C-64 switching across the output load through the low impedance of the spark gap.

After the output pulse, capacitors C-63 and C-64 recharge to the +10 kV supply voltage through a 2.35 MΩ resistance. The 2.35 msec recharge time constant of this stage governs the peak repetition rate of the amplifier. After 4 msec the gap may be re-triggered, the gap voltage of course will not be the full 10 kV but rather 8 kV. The reduced gap voltage results in a longer time delay through the amplifier as well as a lower amplitude output pulse (see specification II-B-5 for typical delay times as a function of pulse rate).

[2] Triggered Spark Gap Corona Light Source, Drawing 10X1100 D-1.

B. Mechanical Descriptions.

1. Chassis Construction.

The chassis for the Spark Gap Trigger Amplifier is built in two separable sections. The amplifier chassis (10X1020 S-2), which contains the trigger amplifier and the C-W high-voltage power supplies,[3] is contained in a 14" x 10" x 4" aluminum box. The front panel chassis (10X1020 S-10), which contains a low-voltage power supply and a 15 kc oscillator-amplifier is mounted on a 5-1/4" rack mount panel.

The amplifier chassis, which contains the air spark gap,has been constructed gas tight with O-ring seals and facilities for slight positive pressurization to allow it to be used near a hydrogen target area (see section III-5).

When shortest possible system delays are desired the amplfier chassis may be removed from the front panel chassis and mounted near the spark chamber pulse modulator. A 25-foot extension cable is available for connecting power between the two chassis making it possible to mount the front panel chassis in an accessible location outside the target area (see Fig. 3).

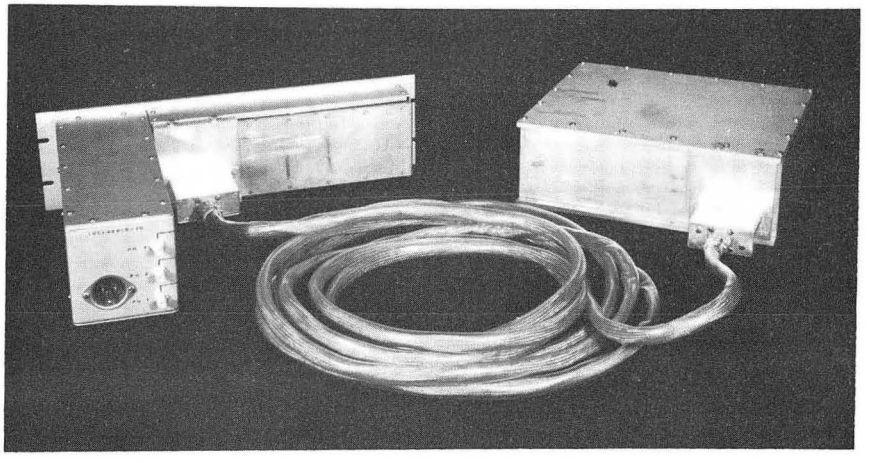

Fig. 3 - Spark-Gap Trigger Amplifier & Interconnecting Cable.

2. Connectors.

The input connector (PG-1), two monitor connectors (PG-2 and PG-3), and two output connectors are located on the rear of the amplifier chassis. Input and monitor connectors have also been provided on the front panel. To use the front panel connectors it is necessary to provide 50 Ω patch cables from PG-1, PG-2, and PG-3 on the rear of the front panel chassis respectively to PG-1, PG-2, and PG-3 on the amplifier chassis.

The use of front panel connectors introduces a 4 nsec time delay due to internal cabling. In instances where shortest possible time delays are desired the input connection should be made directly at the rear of the amplifier chassis.

[3] Harold W. Miller, "10 kV Cockcroft-Walton Voltage Multiplier Power Supply" UCID-2066, EE-966 (Jan 4, 1964)

3. On-Off Switch

The on-off switch is located on the front panel. This switch is in series with the 117 V - 60 cps power line and the primary winding of the input power transformer. The power transformer is a Sola constant-voltage transformer. The input power can be from any 95 - 125 V, 60 cps power source. In instances where power is supplied from racks with line voltage regulators it is necessary that the regulated output be reasonably near a sine wave.

The SGTA is protected from damage by an overload-trip circuit which turns off the high-voltage circuits if there is an overload condition (for example, an excessive input pulse rate.) The circuit can be reset by removing the cause of the overload condition and momentarily turning the front panel switch to reset and then back on. (See UCID-2605 H. W. Miller 7-12-65 for complete description of overload circuit).

4. Indicator Lights.

The following two indicator lights are on the front panel:

(a) Green "on" light - when on, it indicates the presence of the 25.6 V from the low voltage power supply.

(b) Red "+10 kV" - this light when on indicates the +10 kV Cockcroft-Walton power supply is operating.

5. Gas Fittings.

Two 1/8" LRL gas fittings are located on the rear of the amplifier chassis. If the trigger amplifier is used in an area away from an explosive atmosphere the two fittings should be left vented to the atmosphere. In the event the amplifier is used near a hydrogen target area, air lines, one input and one exhaust, must be provided. Dry filtered air at a rate of 1 to 10 cc/min must be circulated through the spark gap compartment to remove contaminated air. This is especially true at high pulse rates.

IV. OPERATION.

A. Voltage Waveforms.

The voltage waveforms present at the input, the two monitors and the output are shown in Fig. 4. All impedance levels are 50Ω. The photographs are multiple exposures taken at 60 pps.

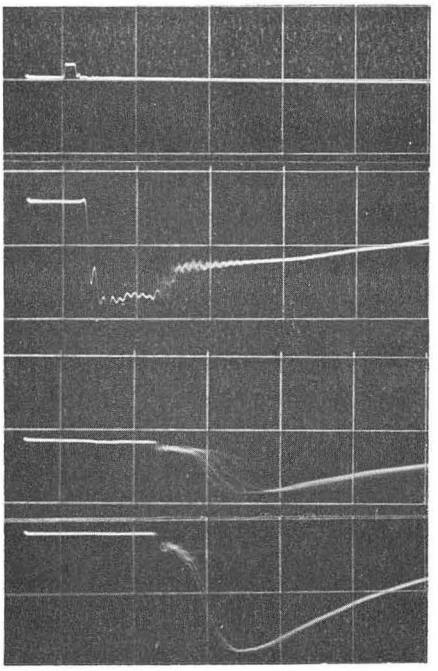

Input Trigger:
Vert Sens: 10 V/cm

PG-2 Monitor:
Vert Sens: 10 V/cm

PG-3 Monitor:
Vert Sens: 10 V/cm

Output:
Vert Sens: 4 kV/cm

Fig. 4

Typical voltage waveforms at the Spark Gap Trigger Amplifier Connectors.
Horizontal Sweeps: 20 nsec/cm.

B. Output Load.

1. The trigger amplifier may be used to drive a larger spark gap. The following suggestions pertain to such a situation.

   a. The energy in the output pulse from the trigger amplifier, if properly used, is sufficient to trigger several spark gaps. Although most types of gaps may be triggered by the output pulse, one type in particular is recommended. The suggested gap is one in which a trigger electrode is used to increase the electric field or "over-voltage" the gap and a corona light is used to initiate an electron avalanche. An example is the gap shown in Fig. 5. Two such gaps are used in the Energy Distribution Box (10X1101), a spark-chamber pulse modulator designed to operate over a wide range of voltages.

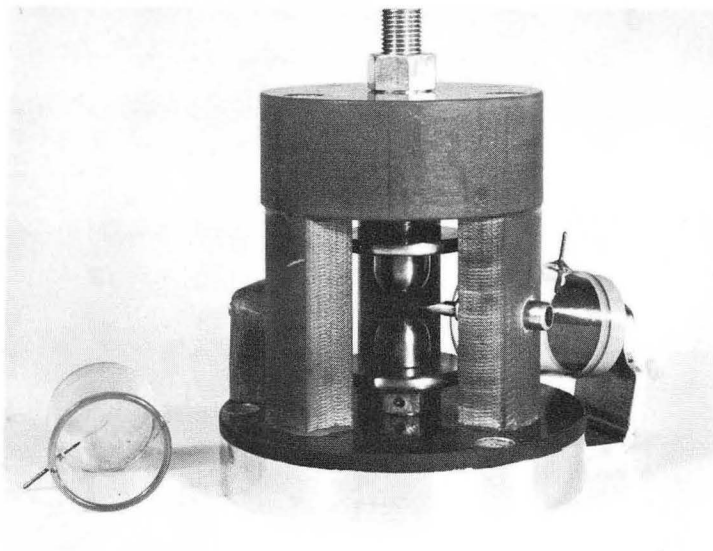

Fig. 5 - Air Spark Gap Triggered by a Corona Lamp.

b. Advantages of a spark gap triggered by a corona light are worthy of mention. They are the following:

   i) With a fixed gap spacing, short time delays are obtainable over a wide range of dc gap voltages.

   ii) There are no sharp electrodes therefore erosion problems are eliminated.

   iii) The result of i) and ii) is an infrequent need for gap cleaning and adjustment.

c. Triggering an External Gap.

   Spark gaps operated at 10 kV or less can be triggered directly by the output pulse from the trigger amplifier. For higher voltage gaps or to decrease time delays and increase reliability in lower voltage gaps, a 3:1 step up transformer has been designed which can be used to drive the trigger electrode. The corona light should still be pulsed through a series 2 k resistor from the 10 kV trigger amplifier output pulse.

c. (Cont.)

A schematic representation of the spark gap being triggered with and without the use of the transformer[4] is shown in Fig. 6, (a) and (b).

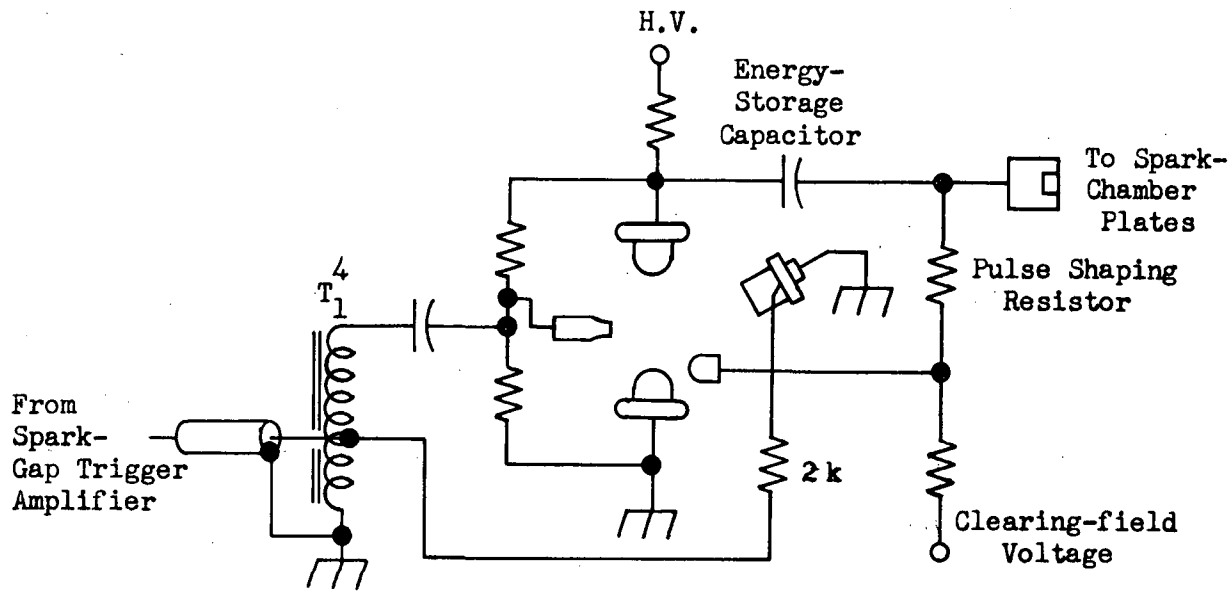

a)

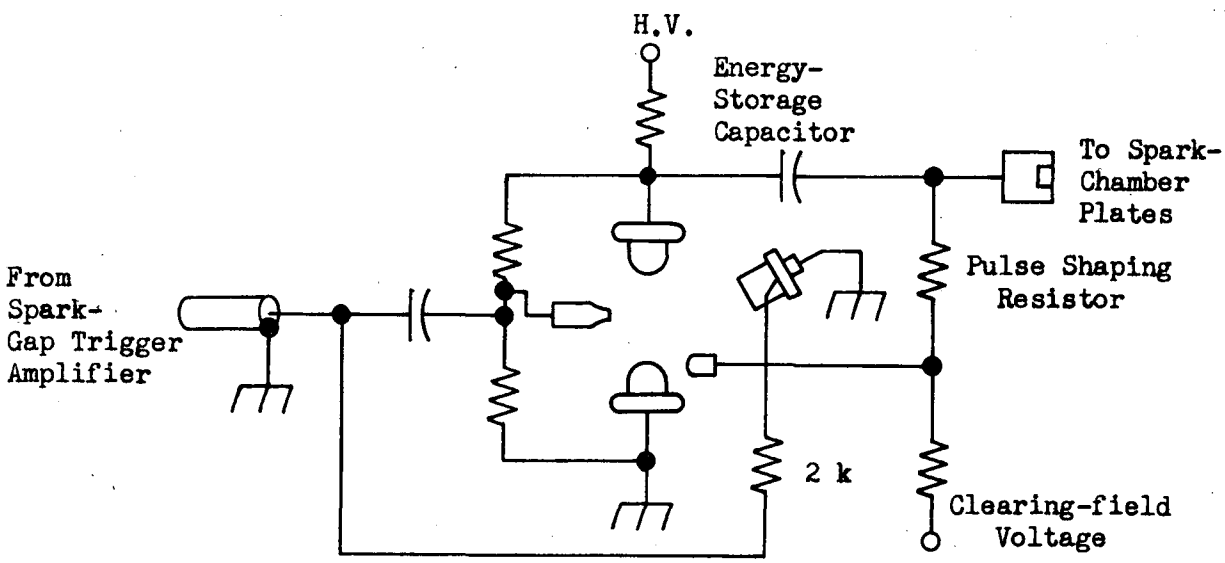

b)

Fig. 6 - Triggering an External Spark Gap:

a) With a step-up transformer,
b) Without a step-up transformer.

[4]For a description of T-1 see Spark Gap Trigger Transformer, Drawing 10X1200 D-3.

C. Cabling and Shielding.

Since the trigger amplifier was designed to be operated in a constant impedance system, a 50 Ω cable should be used to connect between the trigger amplifier and pulse modulator. If electrical radiation is suspected of being a problem, the connecting cable should be an electrically-tight 50 Ω variety such as Andrew Corp. Foam V Heliax. A shielding evaluation of the spark-gap trigger amplifier driving foam Heliax cable shows that spurious signals external to the cable or amplifier are not over 5 millivolts, including power-line wires, monitor connections, and external metal panel surfaces. It is worth noting that the shielded input transformer (an integral part of the Spark Gap Trigger Amplifier) prevents feedback of energy into the input trigger line when the 10 kV output pulse is generated. Thus there is no danger of falsely triggering devices which may be connected to the input line.

V. TYPICAL SPARK CHAMBER SYSTEM.[5]

A. A block diagram of a simplified spark-chamber system is shown in Fig. 7. To emphasize the role of the trigger amplifier in a system, Table 1 indicates the time delays that are typical of each component of the system. Counting Handbook references are indicated. All components with the exception of the spark chambers are available from the Counting Pool.

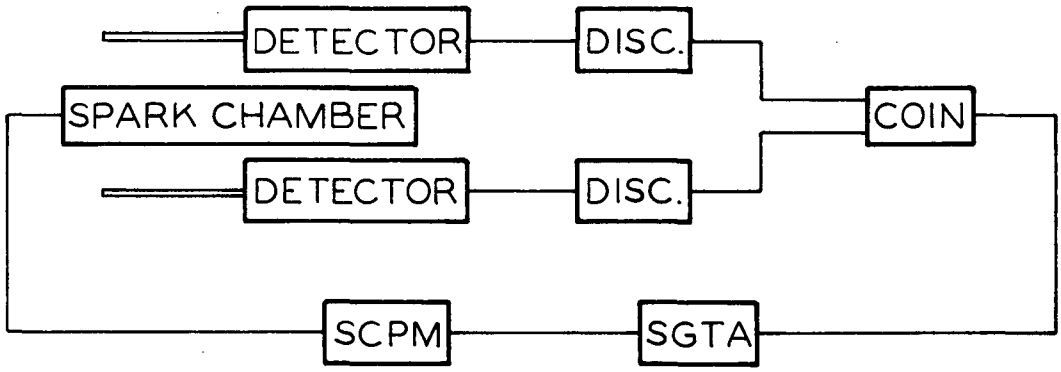

Fig. 7 - Simplified Spark Chamber System Block Diagram.

SYSTEM COMPONENT	TIME DELAYS	COUNTING HANDBOOK REFERENCE
Detectors	5-80 nsec*	Section CC 8
Discriminator & Coincidence	2-20 nsec*	Section CC 3
Spark Chamber Trigger Amplifier	30-40 nsec	Section CC 6
Spark Chamber Pulse Modulator	10-20 nsec	Section CC 6

TABLE 1

*The shortest time delays are not necessarily available from counting pool equipment but can be obtained with commercially available components (e.g., Minature phototubes operated at high voltage per stage and tunnel diode logic circuits.)

[5] Q. A. Kerns, "Spark-Chamber Pulse Modulators", UCRL-10887 (June 1963)

QAK:HM:mt

File No. CC 6-6 (1)
June 10, 1964
Q. A. Kerns
H. W. Miller

Lawrence Radiation Laboratory, University of California, Berkeley

COUNTING NOTE

SPARK CHAMBER ENERGY DISTRIBUTION BOX

I. ABSTRACT

The Spark Chamber Energy Distribution Box is a pulse generator designed to provide high voltage pulses for energizing spark chambers. The important parameters of the circuit can be easily adjusted and/or changed for the best operation of spark chambers having a wide range of plate sizes, gap spacings, and filling gas mixtures.

Ten simultaneous output pulses are produced at ten type HN output connectors approximately 15 nsec after the application of a suitable input trigger (e.g., the output pulse from the Spark Gap Trigger Amplifier, CC 6-5).

An energy storage capacitor is in series, and a pulse shaping resistor is in parallel with each output connector. The storage capacitors are switched across their respective output loads by triggered spark gaps to produce the output pulses.

The amplitude of the output pulses can be varied from 0 to 20 kV by adjusting the spark gap spacings and the voltage of an external dc power supply. The rise time of the output pulses, which is a function of the voltage and current switched, is typically 15 nsec. The pulse voltage is made to decay exponentially to prevent spurious sparks from forming in the spark chambers. Typical decay time constants, which range from 100 nsec to 800 nsec, can be varied at each connector by chosing the value of the pulse shaping resistors.

The present repetition rate and burst rate is 0 to 40 pulses per second.

The container in which the components are placed is provided with "O-ring" gaskets and LRL fittings to allow a slight pressurization of the box, thus allowing it to be used safely near a hydrogen target area. The container is an aluminum box which is electrically a complete shield.

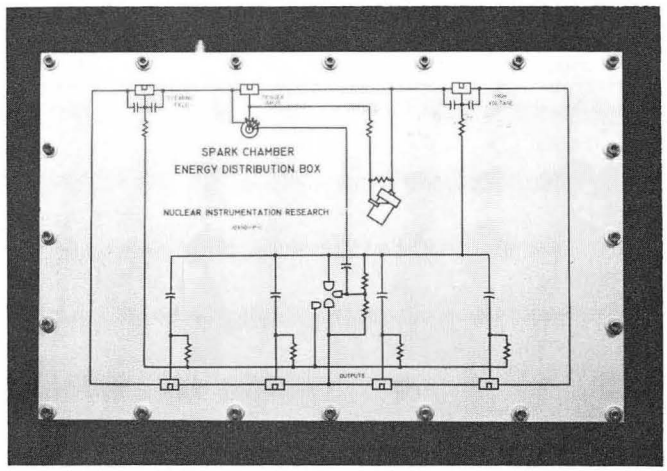

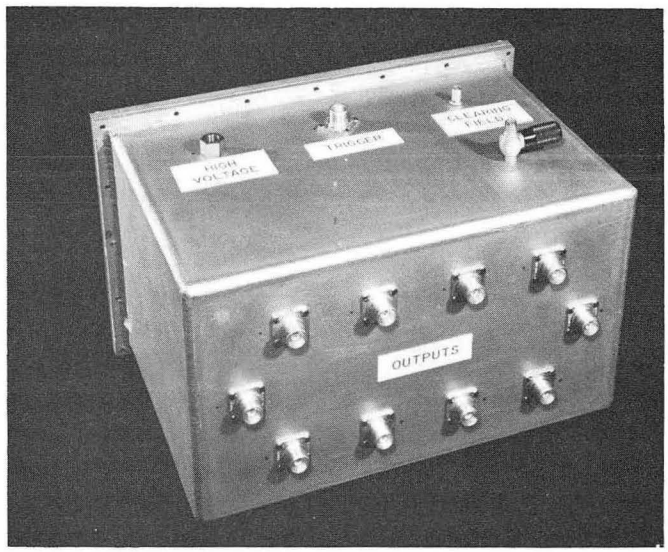

Fig. 1 - Spark Chamber Energy Distribution Box

II. SPECIFICATIONS

A. Input Trigger Pulse.

1. Amplitude: $\geq$ 5 kV negative.
2. Impedance: 50 Ω.
3. Connector: HN.
4. Pulse Shape:
   a) Rise Time: $\leq$ 10 nsec.
   b) Pulse width at half amplitude: $\geq$ 20 nsec.
5. The modulator was designed to be triggered by an output pulse from the spark gap trigger amplifier (Counting Handbook CC 6-5); however, any other trigger source producing a pulse with the above characteristics can be used.

B. Outputs.

The shape and amplitude of the output pulses are dependent on several load and circuit parameters. For flexibility, the energy distribution box has been designed so that the main parameters can be easily changed or adjusted. Typically, the pulse rise time is 15 nsec (e.g., When, for each output connector, the load is 50 Ω, pulse amplitude is 10 kV, energy storage capacitor is 4000 pF, and the discharge resistor is 88 Ω.)

1. Adjustable parameters: Refer to Fig. 2 for clarification of the circuit parameters.
   a) Charging voltage: External supply needed, 20 kV maximum.
   b) Spark gaps:
      i) Number: Two, each switches 5 outputs.
      ii) Gap Spacing: Adjustable to 20 kV. Both gaps must be set for the same voltage.
   c) Energy storage capacitors[1]: 180 pF rated at 40 kV to 16,000 pF rated at 6 kV.
   d) Discharge Resistors: Adjustable by plug-in units.
2. Non-adjustable Parameters: related to each output.
   a) Series inductance L_s: 50 nHy.
   b) Series resistance R_s: Mainly the spark impedance which is time varying and is a function of the load currents. Typically, the resistance changes from an open circuit to a few ohms in about 10 nsec.

C. Delay Time.

The time delay measured between the 10% amplitude points on the leading edges of the input and the output pulses is 15 nsec.

D. Repetition Rate.

0 - 40 pulses per second. The repetition rate of 40 pps is limited by the 8 msec RC recharge time constant necessary to allow the spark gaps to de-ionize when using air at 1 atmosphere.

---

[1] See Sprague Engineering Bulletin #6311-A for an example of available capacitors. A sheet of standard ratings is printed in Fig. 7 at the end of this note.

E. External Power Requirements.

1. High Voltage power supply: An external power supply is required for recharging the energy storage capacitors. The average current required from the supply can be determined from the dc voltage, the total capacitance of the energy storage capacitors, and the maximum average pulse rate as follows:

$$I = \frac{CV}{T}$$

I = Required current rating of power supply.
C = total capacity.
V = High voltage.
T = average period between pulses.

(Example: $C = 40{,}000$ pF, $V = 10$ kV, $T = \frac{1}{40}$, $I = 16$ mA)

In addition, the impedance of the power supply during the recharge cycle must be $\leq R_c/10$ in order that it shall not unduly lengthen the recharge time constant of the circuit.

F. Clearing Field.

0 - 1000 volts, either polarity. The clearing field supply must be able to provide an average current equal to the high voltage supply current. Note: While the distribution box circuits allow a wide range of clearing fields, the chamber itself may require the selection of certain voltages for best performance.

III. CIRCUIT DESCRIPTION

For the complete circuit diagram of the energy distribution box refer to schematic number 10X1100 S-1. This schematic is Fig. 6 at the end of this note. The two spark gaps are triggered from the secondary windings of T_1. The load current for five of the ten outputs is switched by each of the two spark gaps.

The simplified diagram of Fig. 2 will be used to describe the circuit operation. One of the spark gaps is shown in the circuit. Except for the common trigger, the two gaps can be considered to operate independently, and the discussion of one is sufficient. C_s, R_d, and C_c represent, respectively, the energy storage capacitor, the pulse shaping resistor, and the wiring and chamber capacitance connected to one output connector. L_s and R_s represent the series inductance and resistance of the spark gap plus wiring.

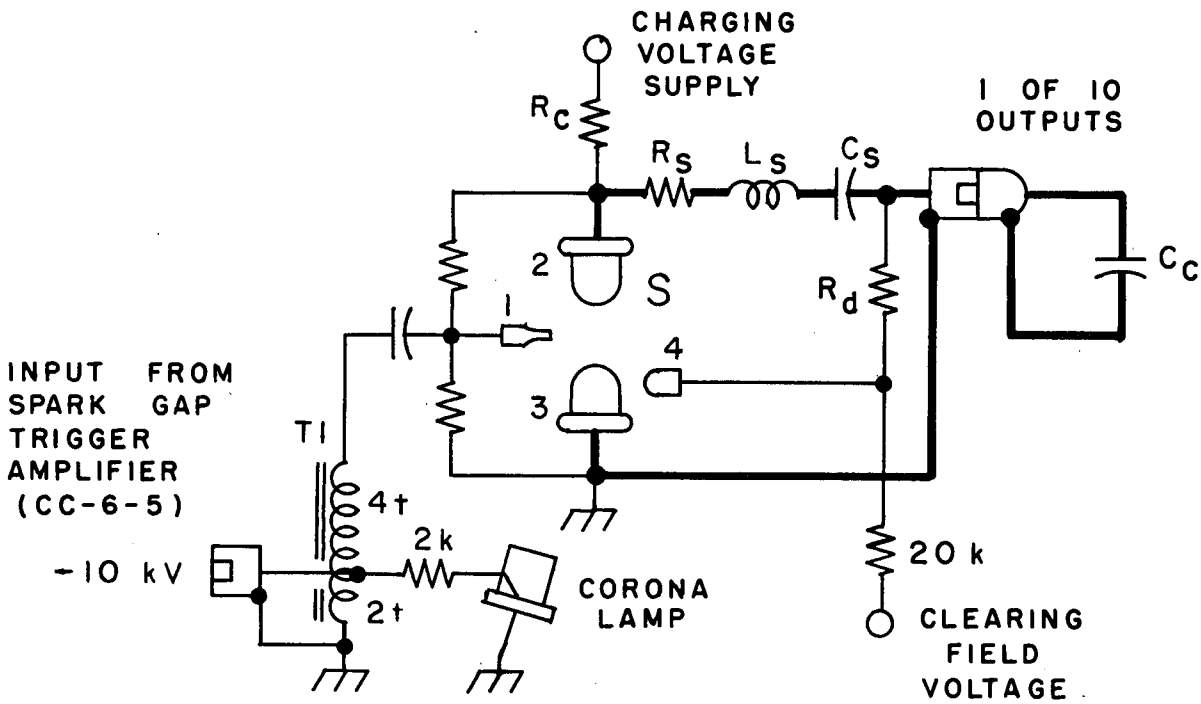

Fig. 2 - Simplified Circuit Diagram

A. Circuit Conditions Just Before an Output Pulse.

Prior to an input trigger, the capacitor C_s is charged from the external H.V. power supply. The clearing field voltage is placed on the spark chamber plates through the series 20 k resistor and R_d.

B. Developing an Output Pulse.

To produce an output pulse, the energy storage capacitor C_s is switched across the output load C_c through the series impedance of the triggered spark gap S. To trigger the spark gap, an input trigger pulse is stepped up in voltage by the 3:1 turns ratio of T_1 and applied to the trigger electrode 1. The electric field is raised to a value which is several times that required for an electron avalanche. A corona lamp[2] energized from the primary winding of T_1 illuminates the gap electrodes. The UV component of the light ejects precisely timed photoelectrons into the over-voltaged gap. The current in the gap increases nearly exponentially with time until it is limited by the circuit impedance.

[2]Triggered Spark Gap Corona Light Source, H. W. Miller (EE-981).

When the pulse voltage rises across C_c, the resistor R_d is switched across the load through the spark gap consisting of electrodes 3 and 4. R_d discharges the chamber voltage with a time constant $\tau = R_d (C_s + C_c)$.

In general, a fast rising pulse is produced which decays exponentially. The damping, however, is adjustable. Note that the firing of the spark chamber produces an additional transient which clips off the tail of the above exponential decay and substitutes a damped oscillation.

C. Recharge Cycle.

After the output pulse is produced, the energy storage capacitors are recharged on a RC time constant determined by the total parallel capacitance of the energy storage capacitors and the series charging resistor R_c. The RC time constant can be adjusted by selecting a suitable value for the series charging resistor R_c. An RC time constant of at least 8 msec is necessary to allow sufficient time for air spark gaps to de-ionize. A longer recovery time constant is permissible providing pulse rates do not present a problem.

IV. MECHANICAL DESCRIPTION

Fig. 3 (a) and (b) shows an internal view of the box in various stages of assembly.

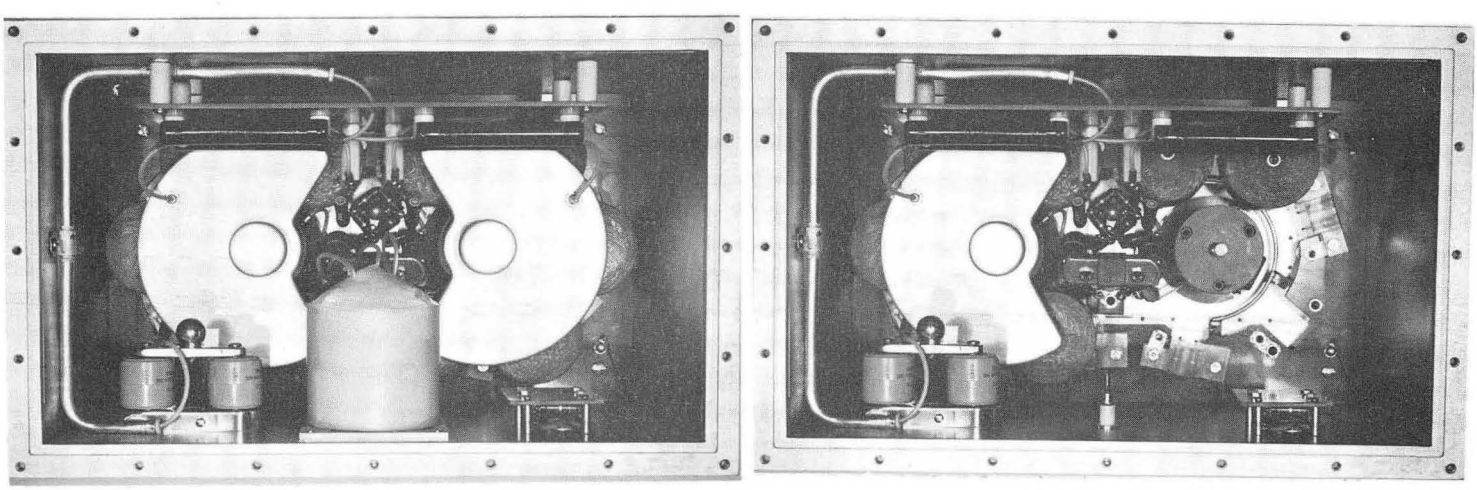

(a) (b)

Fig. 3 - Energy Distribution Box, Top View

(a) Complete assembly.
(b) View (a) with T_1, energy storage capacitors and a pulse shaping resistor mount removed.

The photograph, Fig. 3 (b) shows the pulse shaping resistors and the energy storage capacitors. To facilitate changing of values, both are fitted with "banana plug" type connections as are most of the interconnections. One output connector is located on the bottom of the container directly under each of the energy storage capacitors. (The two spark gaps may be removed for gap setting by unplugging their connections and removing three screws from around the base of the spark gap mount. Spark gap adjustments should be made by the Counting Pool personnel in Bldg. 14.) The container has been provided with "O-ring" gaskets to make a gas-tight seal. Two LRL fittings are provided to allow some circulation of air or selected gas atmosphere. For safety reasons, when the distribution box is used near a hydrogen target it is necessary to flow dry filtered air at the rate of 1 to 10 cc/min. through the container. This action replaces air (or whatever atmosphere is used) which has been contaminated by the spark gap firing. This is especially true at higher pulse rates.

At low pulse rates and away from hydrogen targets, the LRL fitting can be left open; the natural air circulation is then sufficient.

Electrical contact to preserve shielding is accomplished between the lid and the container by a .005" ridge milled around the container flange. Care should be taken when the lid is removed not to damage this ridge.

V. OPERATION

A. The Output Pulse Shape.

The output pulse shape and amplitude depend upon the circuit parameters including the spark chamber and the interconnecting cables between the pulse generator and spark chamber. Due to the current rise time in the spark gaps and the possible range of circuit parameters involved, the exact voltage wave shape across the chamber should be measured if exact information is required. The wave shape for a particular system can be estimated from circuit theory. The following comments will aid in the selection of variable parameters.

1. C_s is chosen to be several times the capacitance of C_c. This reduces the capacitive split of voltage which occurs across the spark chamber.

2. The cable connecting the generator and the spark chamber should be as short as possible to preserve a fast pulse rise time. For an electrically short length of coaxial transmission line, the inductance added per foot is given by $L = Z_o \tau$ when Z_o is the characteristic impedance of the line and τ is the one way transit time. For one foot of RG 9/u cable $L = 50 \times 1.5 \times 10^{-9} = 75$ nHy. which is comparable to the 50 nHy internal inductance of the distribution box.

   If necessary, several outputs from the same gap can be connected in parallel to decrease the series inductance and the rise time of the pulse.

3. To minimize spurious sparking of a chamber, the pulse voltage is made to decay exponentially by selecting a suitable discharging resistor R_d. The time constant is given by $\tau = R_d (C_s + C_c)$ and usually is from 100 to 800 nsec. (See section VI for an example of the effect of discharge time constant upon spark chamber efficiency.)

B. Shielding.

1. Use double-shielded cable (RG 9/u) to connect the distribution box to the spark chamber.

VI. PARAMETERS USEFUL WITH A TYPICAL CHAMBER.

The 4,000 pF ceramic capacitors and the 88 Ω pulse shaping resistors supplied with the energy distribution box were found to be reasonable component values for operation with 90% neon - 10% helium filled spark chambers with the following dimensions: Plate spacing = 0.8 cm, plate areas ranged from 30 cm x 30 cm to 30 cm x 90 cm. Optimum chamber operation was secured when the high voltage supplied to the energy storage capacitors was between 7 kV and 9 kV. A 2 ft. 50 Ω transmission line **(RG 9/u)** was used to connect the distribution box to the spark chamber. Fig. 4 shows the spark chamber efficiency as a function of the high voltage supplied to the energy storage capacitors. The efficiency is plotted for the following two conditions: (1) when ionizing particles are known to have passed through the chamber plates, and (2) spurious sparking resulting when particles have not passed through the chamber. In both cases, a plot is shown for three different discharge time constants, (i.e., three different values of the pulse shaping resistor).

As an example of the use of Fig. 4, one can see that of the three time constants, τ = 400 nsec gives the greatest latitude in H. V. gap spacing and that for τ = 400 nsec, 7 kV/cm is a favorable choice of field.

Other chambers exhibit similar characteristics; an appropriate graph for them facilitates selection of a discharge resistor and a high voltage which will result in nearly 100% track detection efficiency while producing a negligible percentage of spurious sparking in the absence of tracks.

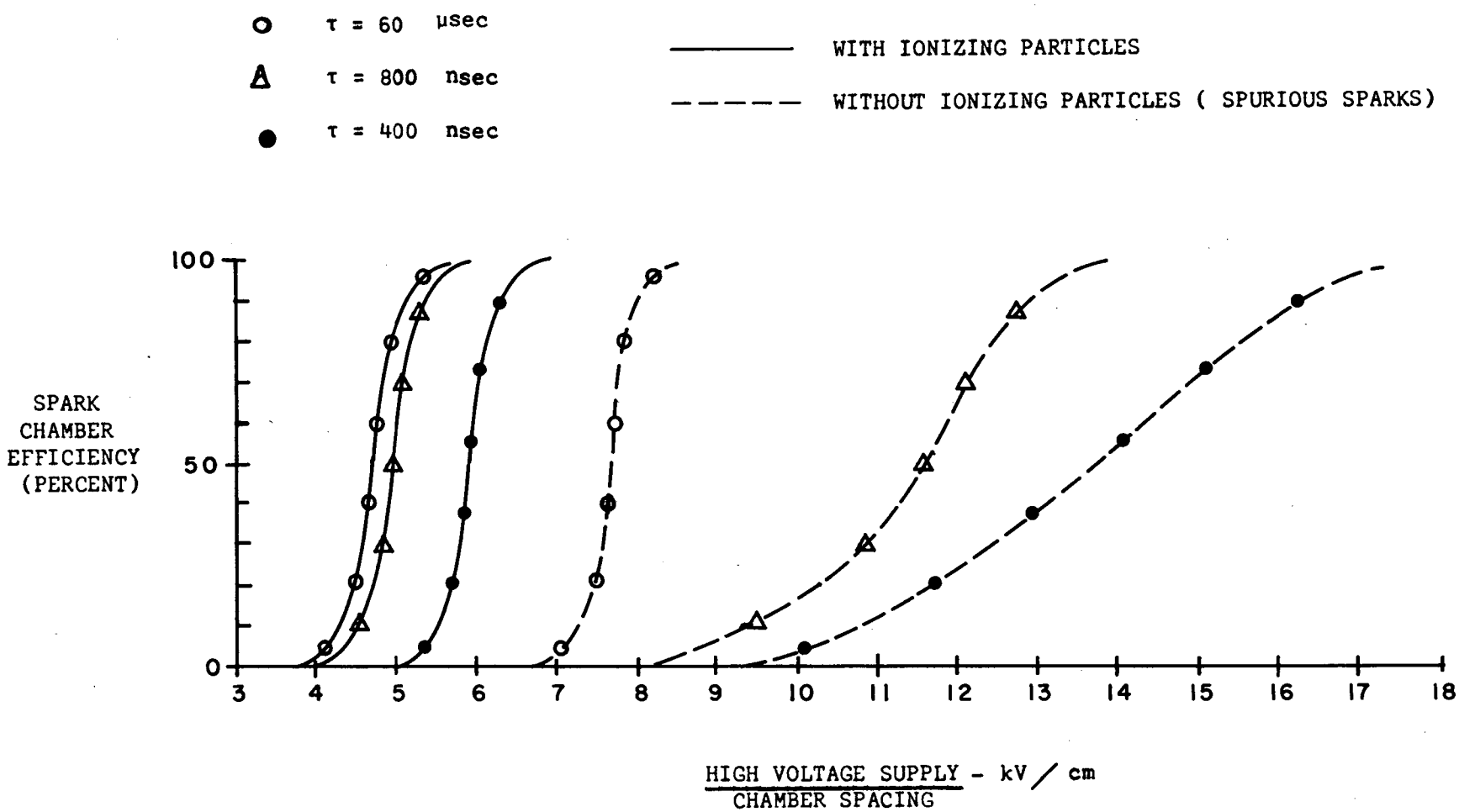

PLATE SPACING = 0.8 cm
.010 in. ALUMINUM PLATES

PLATE AREA = 1 ft. x 3 ft.
FILLING GAS: 90% NEON 10% HELIUM

C_S = 4000 pF

GRAPH SHOWING THE EFFECT OF PULSE RC DECAY TIME CONSTANT UPON THE EFFICIENCY OF A LUCITE FRAME SPARK CHAMBER

FIGURE 4

VII. TYPICAL SPARK CHAMBER SYSTEM[5]

To emphasize the role of the energy distribution box (SCPM) in a system, a block diagram of a simplified spark-chamber system is shown in Fig. 5. Table 1 indicates the time delays that are typical of each component of the system. Counting Handbook references are indicated. All components with the exception of the spark chambers are available from the Counting Pool.

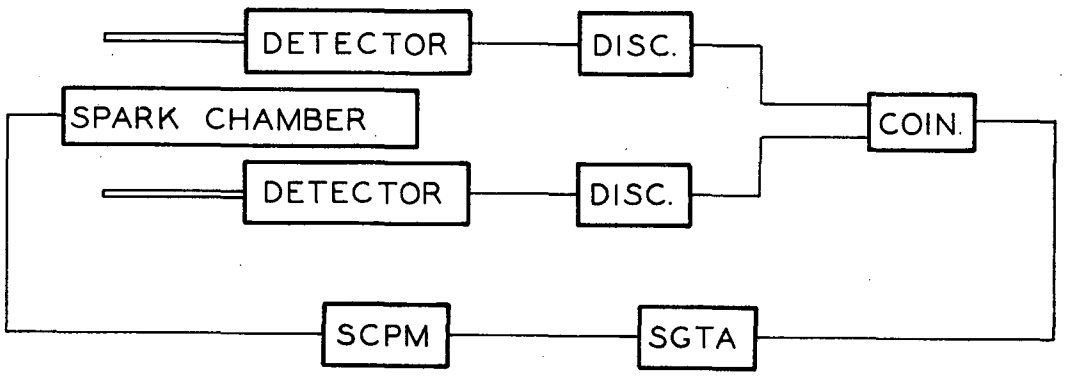

Fig. 5 - Simplified Spark Chamber System Block Diagram.

SYSTEM COMPONENT	TIME DELAYS	COUNTING HANDBOOK REFERENCE
Detectors	5-80 nsec*	Section CC 8
Discriminator & Coincidence	2-20 nsec*	Section CC 3
Spark Chamber Trigger Amplifier	30-40 nsec	Section CC 6
Spark Chamber Pulse Modulator	10-20 nsec	Section CC 6

TABLE 1

*The shortest time delays are not necessarily available from counting pool equipment but can be obtained with commercially available components (e.g., Minature phototubes operated at high voltage per stage and tunnel diode logic circuits.)

[5] Q. A. Kerns, "Spark-Chamber Pulse Modulators", UCRL-10887 (June 1963)

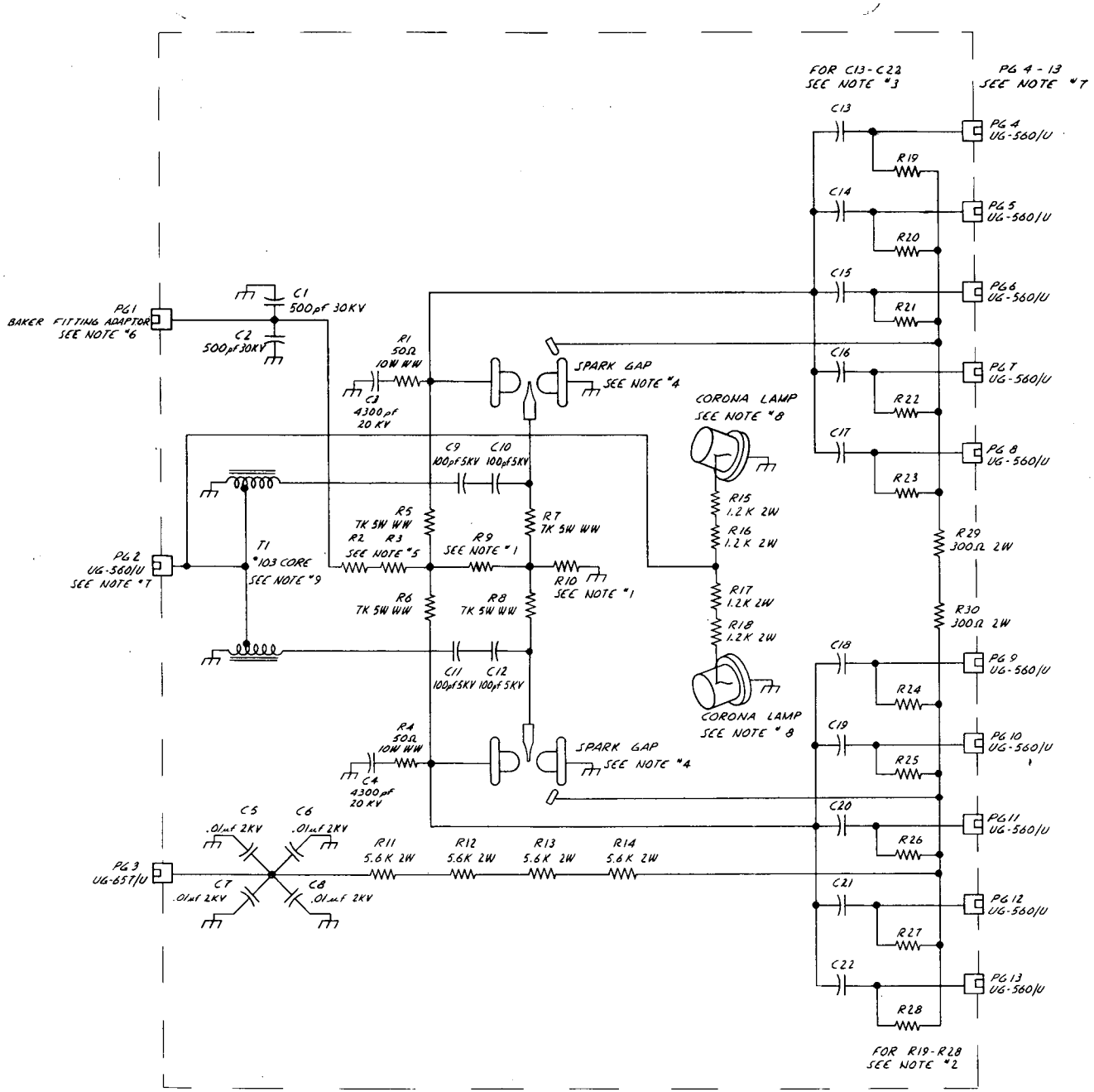

NOTES

1) 24 2M 2W RESISTORS SPIRAL WOUND WITH CENTER TAP ON A $\frac{5}{8} \times \frac{5}{8}$ EPOXY POST
2) 4 ea. 2W RESISTORS MTD. IN LUCITE - SEE DWG. 10X1102-M-5 CHOOSE RESISTOR VALUE TO GIVE DESIRED DISCHARGE TIME CONSTANT (88Ω IS TYPICAL)
3) C13-C22 ARE MOUNTED ON BANANA PLUGS TO ALLOW SELECTION OF CAPACITOR VALUE (4000pf 30KV TYPICAL)
4) FOR SPARK GAP SEE DWG. 10X1100-A-3
5) CHOOSE RESISTOR VALUE TO GIVE THE DESIRED RECOVERY TIME - CONSTANT (8 m SEC. OR MORE) WITH ENERGY STORAGE CAPACITORS USED
6) SEE DWG. 10X1102-M-6 FOR BAKER FITTING ADAPTOR; BAKER FITTING DWG. 10A2041
7) FOR MODIFIED UG-560/U SEE DWG. 10X1152-A-1
8) SEE ENG. NOTE EE-981 FOR CORONA LAMP
9) SEE DWG. 10X1100-A-1 FOR TRANSFORMER
10) SEE SKETCH FOR LOCATION OF SERIAL NO. —

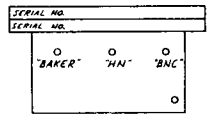

11) SEE PHOTOGRAPHS : SPK. GAP 2910, 2911 : ASSBY. 2479, 2480-C, 2481, 2482-C, 2483, 2484-C

Fig. 6 - Energy Distribution Box Schematic 10X1100 S-1

STANDARD RATINGS

pF	Catalog Number	Size in Inches D	Size in Inches H
6KVDC			
1000	705C1	1.062	.687
2200	705C2	1.312	.687
3900	705C3	1.468	.687
5100	705C4	1.718	.937
8200	705C5	2.000	.937
11000	705C6	2.187	.937
15000	705C7	2.500	.937
16000	705C8	2.687	.937
10KVDC			
620	706C1	1.062	.812
1200	706C2	1.312	.812
2200	706C3	1.468	.812
3000	706C4	1.718	1.062
4700	706C5	2.000	1.062
6200	706C6	2.187	1.062
8600	706C7	2.500	1.062
9600	706C8	2.687	1.062
15KVDC			
390	707C1	1.062	.953
900	707C2	1.312	.953
1500	707C3	1.468	.953
2000	707C4	1.718	1.203
3300	707C5	2.000	1.203
4300	707C6	2.187	1.203
6200	707C7	2.500	1.203
6800	707C8	2.687	1.203

pF	Catalog Number	Size in Inches D	Size in Inches H
20KVDC			
360	708C1	1.062	1.125
650	708C2	1.312	1.125
1200	708C3	1.468	1.359
1600	708C4	1.718	1.359
2500	708C5	2.000	1.359
3300	708C6	2.187	1.359
4300	708C7	2.500	1.359
5000	708C8	2.687	1.359
30KVDC			
240	709C1	1.062	1.312
500	709C2	1.312	1.312
900	709C3	1.468	1.562
1200	709C4	1.718	1.562
1800	709C5	2.000	1.562
2500	709C6	2.187	1.562
3300	709C7	2.500	1.562
3900	709C8	2.687	1.562
40KVDC			
180	710C1	1.062	1.609
360	710C2	1.312	1.609
620	710C3	1.468	1.843
910	710C4	1.718	1.843
1300	710C5	2.000	1.843
1800	710C6	2.187	1.843
2500	710C7	2.500	1.843
2700	710C8	2.687	1.843

Fig. 7 - Ratings on Sprague Capacitors
Which Fit in the Energy Distribution Box

QAK:HWM:mt

File No. CC 6-7 (1)
Q. A. Kerns
A. K. Wolverton
February 10, 1964

Lawrence Radiation Laboratory, University of California, Berkeley

COUNTING NOTE

A HIGH-VOLTAGE PROBE FOR NANOSECOND PULSES

I. INTRODUCTION

This note describes a wide-band oscilloscope probe developed for monitoring the waveforms of high-voltage nanosecond pulse modulators such as spark-chamber drivers and Kerr-cell shutters. The probe meets three design objectives. The initial goal was a voltage attenuating device that would put a minimum load on the voltage source and deliver an output voltage to a 50 ohm transmission line. This 50 ohm output voltage amplitude also had to be sufficient for a wide-band oscilloscope like the Tektronix 519 (about 10 volts/cm deflection sensitivity), either directly or through wide-band 50 ohm attenuators.* The third objective was to optimize the probe band width to utilize as much of the band width of these oscilloscopes as possible.

These requirements led to the development of a series of high impedance, compensated probes for 20, 40, and 80 kV. The output, matched to a 50 ohm coaxial line through a type N connector, has a rise time of less than 0.5 nsec. Furthermore, the probe has dc response; there is no droop imposed on a flattop pulse.

II. INPUT IMPEDANCE

Units can be made with various input resistances and voltage division ratios under the constraint that for a 50 ohm output:

(input resistance) = 50 x (voltage division ratio)

For example, a division ratio of 200:1 sets input R at 10 k. The voltage division ratios were selected to make the probe usable over a wide range of input voltages in conjunction with the Tektronix 519, whose sensitivity is approximately 10 volts/cm. For instance, with a 200:1 probe used directly, 2 kV input to the probe will give 1 cm deflection. This enables the user to view small details on larger peak amplitude waveforms. To view a larger pulse with the same probe, one simply inserts a suitable number of 50 ohm attenuators (such as General Radio 874-G) in the output coaxial line.

The input shunt capacitance of the probe is as follows:

MODEL	INPUT C
20 kV	1.5 pF
40 kV	3 pF
80 kV	6 pF

*For example, General Radio 874-G attenuators.

III. INTERNAL CONSTRUCTION

An assembled probe, rated at 40 kV peak input, appears in Fig. 1, along with its exploded assembly. The sphere is the high voltage electrode, while the hemisphere is the ground shell. This geometry allows a compact probe for a given peak voltage by minimizing voltage gradient. (Probes rated at 20 kV and 80 kV use the same mounting base hardware and differ only in the scale of the sphere, hemisphere dimensions, and in the resistor strings.) The resistor string extends from the hv electrode to the pin connector, which fits over the pin on the capacitor disc. Foamed-in-place polyurethane foam provides support and insulation of the hv electrode and the resistors.

The wide bandwidth characteristic comes about through the careful alignment of the resistor string so that the IR potentials at each point are equal to the electrostatic potentials.*

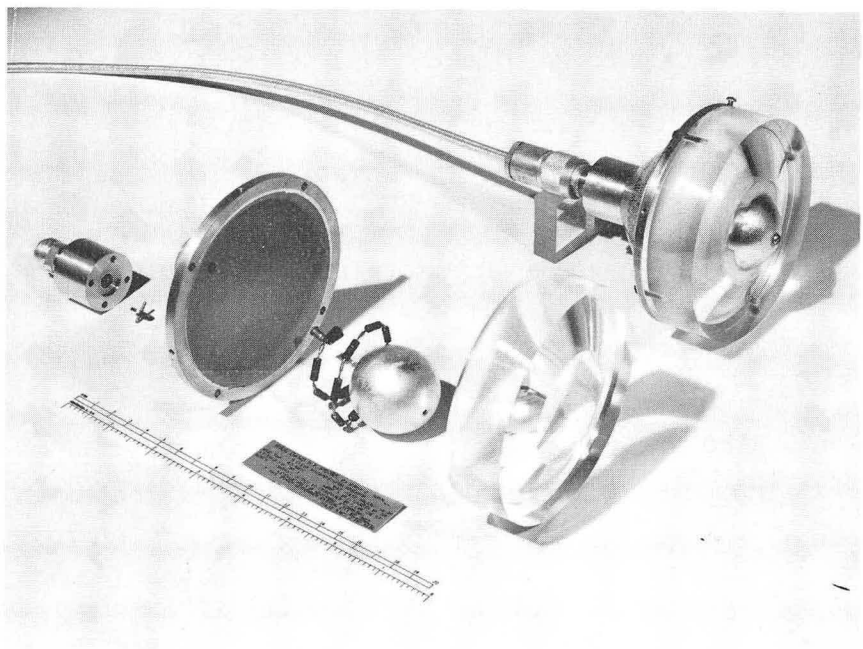

Fig. 1 - High-voltage Probe, Exploded View and Assembled

A. Output Termination.

It is vital to make sure that the output of the probe is always a terminated 50 ohm line. Otherwise, frequency response will no longer be flat, and there can be internal high voltage breakdown which may result in permanent damage.

B. D.C. Blocking Capacitor Use.

The probe is designed for pulse use, and the average power dissipation limit of the resistor string rules out the application of dc directly to the hv electrode. When there is a dc level in

*For a more detailed discussion, see UCRL-11202.

the circuit to be monitored, the probe requires a blocking capacitor in series with the hv electrode. A tapped hole in the electrode permits attachment of capacitors or other leads.

IV. POWER RATINGS

A. Average Power Rating.

The same resistor dissipation considerations also put a limit on the allowable average power in repetitive pulse application. The label on each probe gives its average power rating.

B. Peak Ratings.

Two limitations determine peak instantaneous voltage rating, high voltage breakdown and resistor non-linearity. In these probes breakdown voltage exceeds the nominal rating by a factor of approximately 2. The nominal rating, however, represents the maximum voltage at which the output waveform is essentially linear with respect to the input. For instance, in the 40 kV probes, the resistance of the series string decreases by 2 to 3% as input voltage changes from 0 to 40 kV.

In addition to the average power and peak voltage ratings there is a peak nonrecurrent impulse energy beyond which there is a permanent resistance change. Resistor tests indicate the following probe ratings, which must not be exceeded under any circumstances:

MODEL, kV	MAXIMUM ONE-SHOT PULSE JOULES ABSORBED BY PROBE
20	4
40	35
80	300

The energy absorbed by the probe can be calculated as:

$$\frac{1}{R}\int_0^{\infty} E^2\, dt,\ E(t)$$

is the pulse voltage waveform, and R is the probe resistance (given on the probe label). If E(t) is completely unknown, it is good practice to use a probe of higher rating for the initial testing.

V. PROBE MOUNTING

Fig. 2 shows an application of a 20 kV probe with a blocking capacitor. However, for permanent applications, an enclosed ground connection could normally be provided for the probe. The probe design permits mounting in such a way as to eliminate extraneous electrical noise. The tapped holes on the rim of the hemispherical shell allow attachment to a grounded wall or ground plane. Similarly, in the hv electrode is a mounting hole for a dc blocking capacitor or an extension lead when space restrictions require it.

Fig. 3 shows how the probe can be used with a coaxial transmission line. A hole in the outer conductor with a suitable flange permits mounting of the probe's ground shell rim flush against the coax. Once the probe is in place, the hv electrode makes contact with the center conductor of the coaxial line.

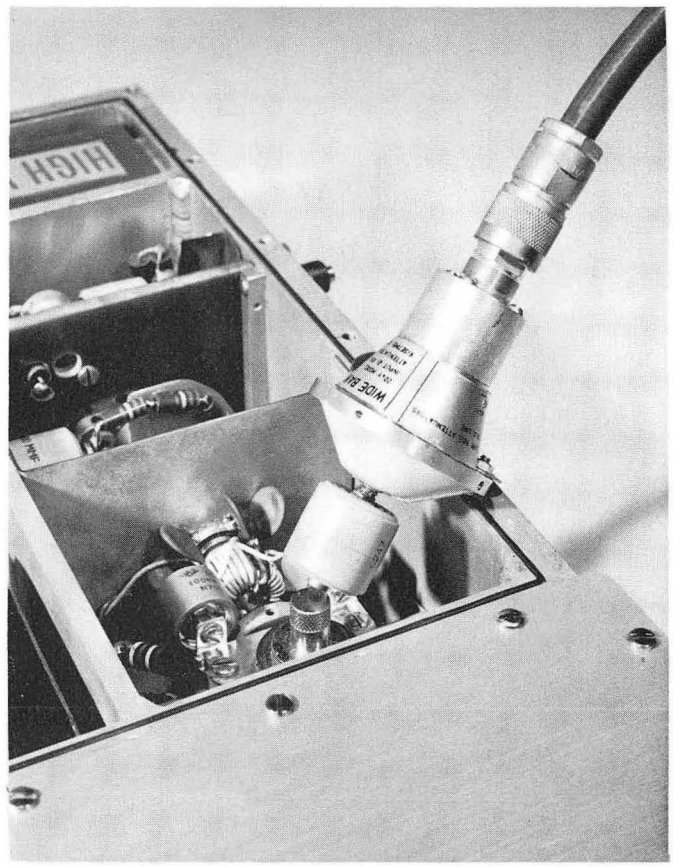

Fig. 2 - The 20 kV probe is used with a blocking capacitor to monitor an anode of a pulser.

Fig. 3 - The 40 kV probe mounted in a coaxial transmission line.

QAK:AKW:mt

File No. CC 6-8 (1)
G. Constantin and
C. Anderson
August 10, 1966

Lawrence Radiation Laboratory, University of California, Berkeley

COUNTING NOTE

15kV 20mA SPARK CHAMBER BOOSTER SUPPLY

I. PURPOSE

An unregulated high voltage dc power supply operating from regulated ac input power is often a satisfactory voltage source for spark chamber capacitor banks. The high internal impedance of available unregulated power supplies at high spark repetition rates, however, can result in a drop in output voltage.

The 15kV, 20mA power units used at the Laboratory show a significantly varying internal impedance from no-load to full-load conditions. With the input voltage set to give an output of 15kV at 20mA, the impedance varies from 270K at 2.5mA load to 96K at 20mA load.

If a 99 percent recovery of the capacitor bank voltage is needed, it may be necessary to impose a costly dead time on the entire system. The purpose of the booster circuit is to recharge capacitor banks at a higher rate than is possible with an un-aided power supply.

II. PRINCIPLE OF OPERATION

An 80 percent recovery of a simple R-C circuit requires approximately 1.6 time constants, while a 99 percent recovery would require 4.6 time constants. The object of the booster circuit is to immediately boost the ac input to the power supply by 20 to 25 percent following a spark discharge, thereby forcing the capacitor bank to charge up to the full quiescent voltage level in the time normally required to charge up to the 80 percent level. In practice the power supply is used to recharge spark chamber capacitors through current limiting resistors of sufficient value to allow the sparks to quench. Since the power supply contains stored energy in the filter capacitors, the voltage drop seen at its output is often less than the nearly 100 percent drop on the capacitor side of the current limiting resistor during a spark. Therefore, the boost is effectively much greater than the 20 to 25 percent voltage rise would seem to indicate. As seen in the comparisons shown in Table I, the improvement in recovery time can be close to a factor of 10. The times listed are for recovery within 1 percent of the initial value.

III. THE CIRCUIT

The ac input to the power supply is dynamically stepped by means of a switchable series impedance element. The impedance element is a two-winding reactor. The impedance of the primary is controlled by switching the load on the secondary winding between short circuit and open circuit; thereby switching the primary impedance from nearly zero to L_m, the magnetizing inductance of the control transformer. During the quiescent intervals between capacitor recharge, when there is little or no output load, sufficient reduction in input voltage to the H-V power supply is ensured by an extra load following the series impedance. Manual adjustment of output high voltage is made by means of a variable transformer during the quiescent period.

A resistive divider (the high-voltage meter series resistance) is used to sample the high-voltage output. Silicon controlled recitifiers between the center tap and each half of the control transformer secondary are fired by this control voltage to effectively reduce the reactor impedance to a low value during the boost cycle, thereby providing full line voltage to the variable-transformer input for boost action.

IV. OPERATING INSTRUCTIONS

An auxiliary meter on the front panel of the power supply indicates the control current to the SCR gate. The adjacent adjustment control should be in the extreme counter-clockwise position while setting the high voltage. Once the main-voltage control (the variable transformer setting) has been set to deliver the desired voltage to the capacitor bank, the auxiliary control should be adjusted to bring the meter pointer just to the red line. The high-voltage meter will be seen to rise as this control is rotated further clockwise. This is caused by the boosting circuit cycling periodically.

Since the boost varies by half-cycle increments at the power-line frequency, the control accuracy is thereby limited to approximately 1 percent.

Line voltage regulation ahead of the supply is highly recommended since none is built in.

GC/mlr

TABLE I

FAST RECOVERY 15kV 20mA SUPPLY PERFORMANCE

LOAD CAPACITOR	.1μf		.24μf		1μf	
Voltage	Boosted	Unboosted	Boosted	Unboosted	Boosted	Unboosted
7.5kV	45ms	600ms	70ms	800ms	180ms	1.6sec
10.0kV	45ms	600ms	70ms	800ms	180ms	1.6sec
12.5kV	45ms	600ms	70ms	800ms	180ms	1.6sec
15.0kV	60ms	600ms	90ms	800ms	220ms	1.6sec

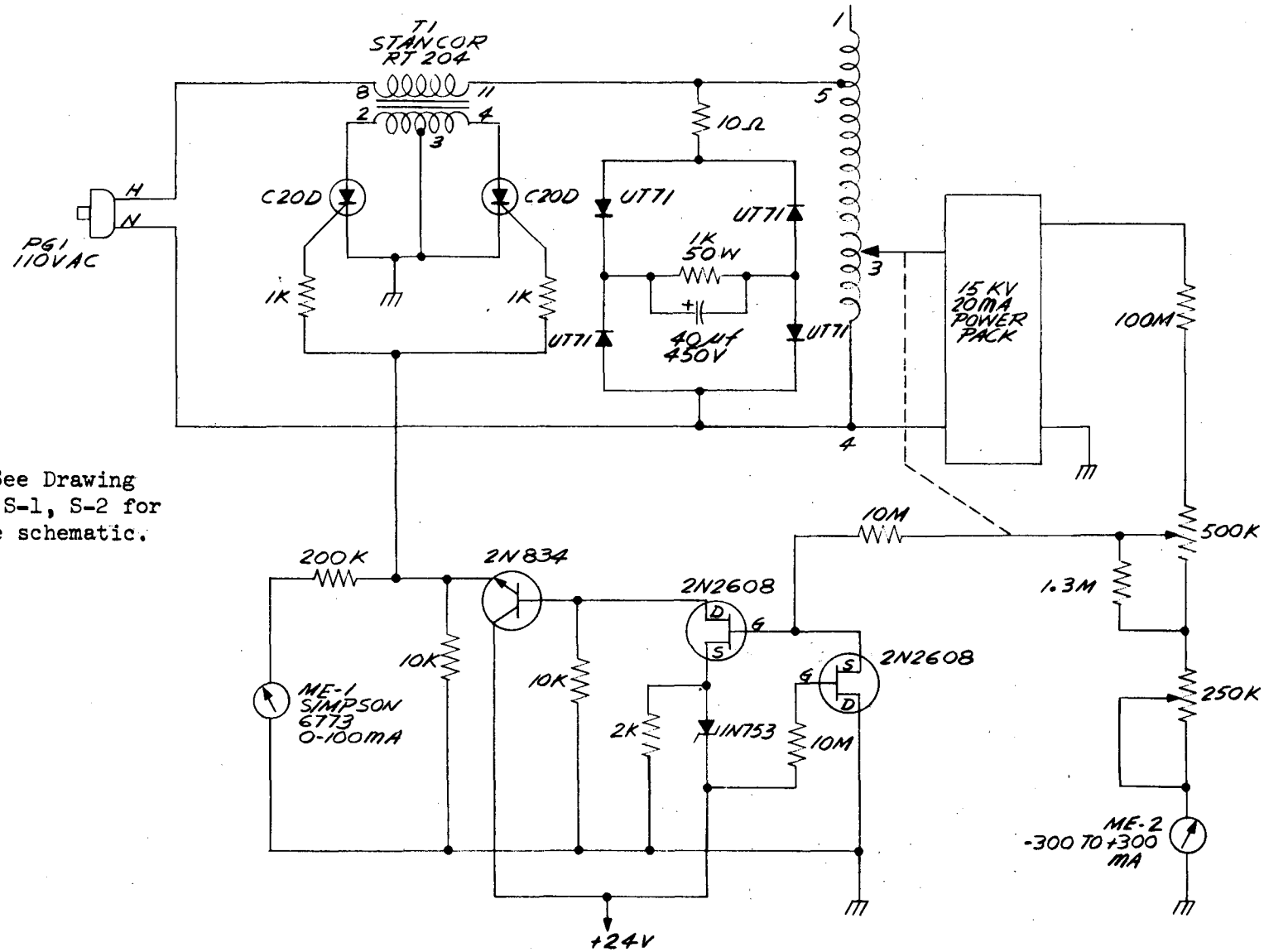

NOTE: See Drawing 14X1502 S-1, S-2 for complete schematic.

Fig. 1 - Schematic Diagram of 15kV 20mA Fast Recovery Booster High Voltage Power Supply - 14X1502 S-1, S-2

File No. CC 8-2C (1)
D. Mack
Rev. December 21, 1964
D. A. Mack, M. Thibideau

Lawrence Radiation Laboratory, University of California, Berkeley

COUNTING NOTE

MULTIPLIER PHOTOTUBE - MANUFACTURER'S DATA

ABSTRACT

A survey has been made of the multiplier phototubes suitable for scintillation and Cerenkov counting generally available in this country including the characteristics of most interest to the experimenter. Many other photo-sensitive devices which may occasionally be used for scintillation counting have not been listed. The quantum efficiency was calculated from manufacturers' data; all other items were compiled from manufacturers' information. 1,2,3,4,5,6,7,8.

PHOTOTUBE TYPES

Phototubes with 3 or 4 digit designation numbers (e.g. 7046), issued by the Joint Electron Devices Engineering Council (JEDEC), are in commercial production in the U.S.A. Developmental and specialized phototubes produced by DuMont are designated by the letter "K" followed by four digits. The RCA Lancaster, Pennsylvania plant identifies its developmental tubes with a letter "C" followed by 4 or 5 digits. CBS developmental tubes are listed as "CL" followed by 4 digits. Westinghouse developmental tubes are identified with letters "WX". Developmental tubes are not in high quantity production, the electrical characteristics are subject to change, and usually no guarantee is made as to future availability.

CATHODE QUANTUM EFFICIENCY

The cathode quantum efficiency, the ratio of emitted photoelectrons to incident photons, as defined here includes the transmission and reflection losses of the window and thus becomes a value for the tube and not the photosurface alone.[9] The quantum efficiency is given for the wavelength of maximum response, i.e., the spectral region of greatest photosensitivity. Quantum efficiency has been calculated as the product of the cathode radiant sensitivity in microamperes per microwatt and the photon energy in electron volts for the wavelength of maximum response.

PULSE RISE TIME

Two figures are often given by the manufacturer: Anode pulse rise time is measured between 10% and 90% of maximum anode signal. It is determined primarily by transit time variations in the multiplier and with a small incident light spot (e.g. 1 mm) centered on the photocathode.

Cathode transit time difference for a certain specified area of the cathode is the transit time for light pulses striking that area minus the transit time for light pulses striking a reference area (center) of the cathode.

SPECTRAL SENSITIVITY CHARACTERISTICS OF PHOTOTUBES: For equal values of radiant flux at all wavelenghts.

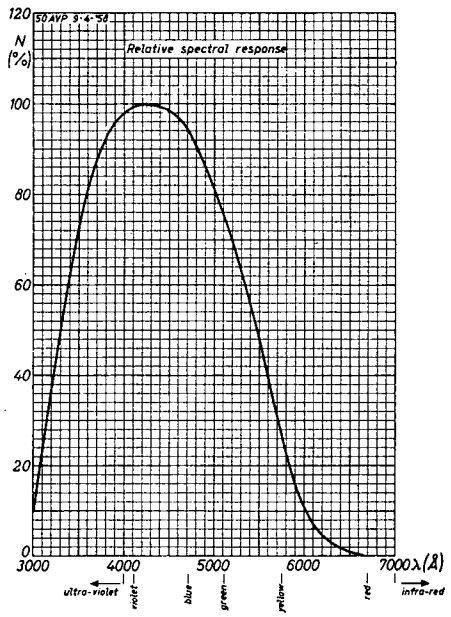

Spectral response of the A-types.

Fig. 1,A Spectral Response
AMPEREX

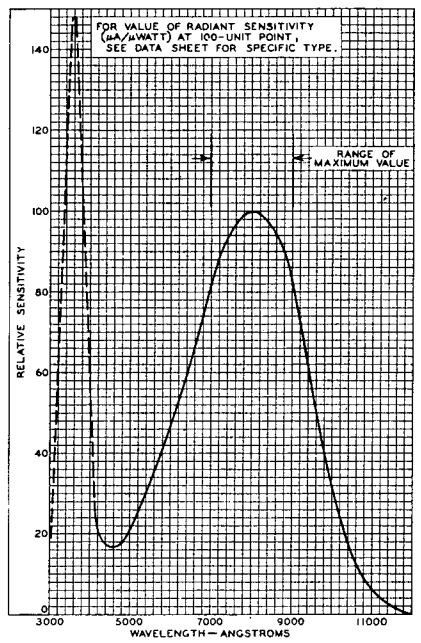

Fig. 2, S-1 Spectral Response

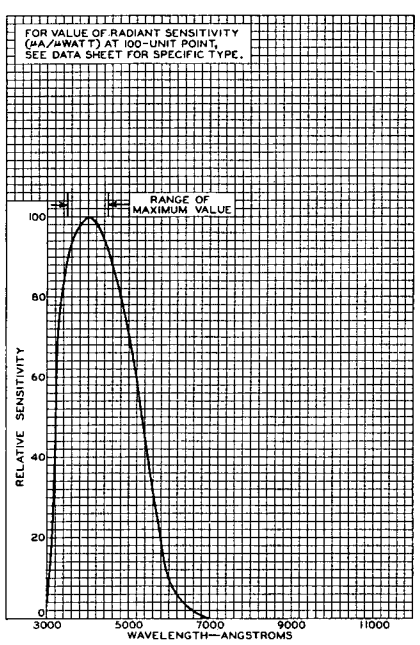

Fig. 3, S-4 Spectral Response

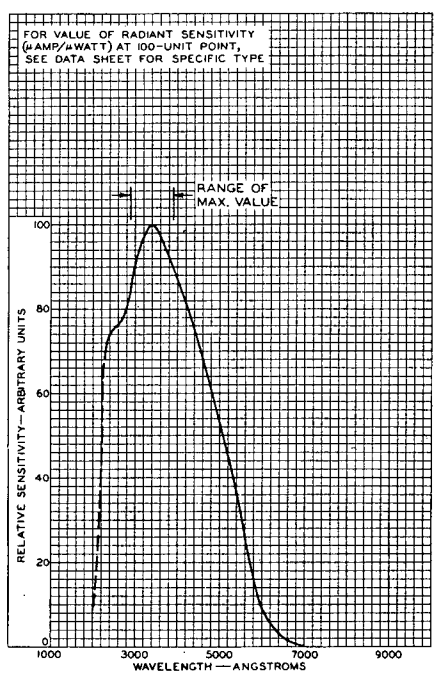

Fig. 4, S-5 Spectral Response

SPECTRAL SENSITIVITY CHARACTERISTICS OF PHOTOTUBES: For equal values of radiant flux at all wavelengths.

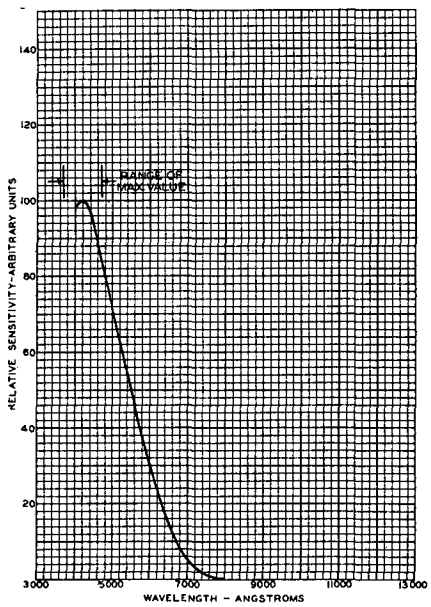

Fig. 5, S-8 Spectral Response

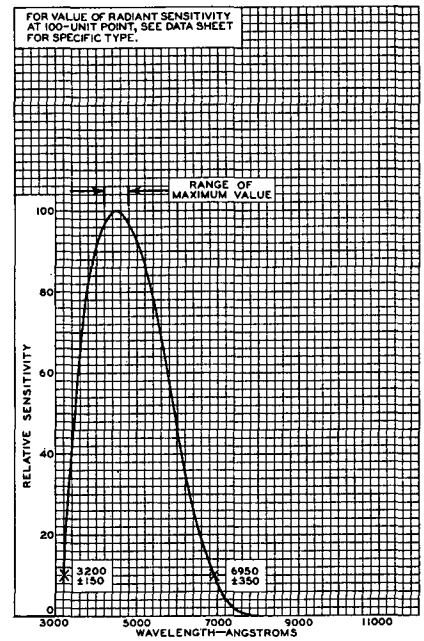

Fig. 6, S-10 Spectral Response

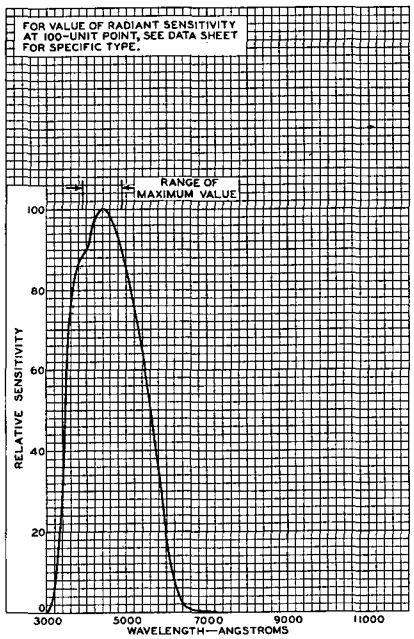

Fig. 7, S-11 Spectral Response

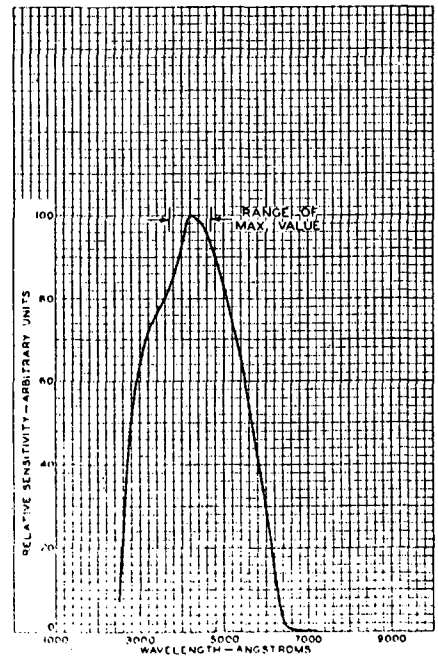

Fig. 8, S-11 EXTENDED Spectral Response

SPECTRAL SENSITIVITY CHARACTERISTICS OF PHOTOTUBES: For equal values of radiant flux at all wavelengths.

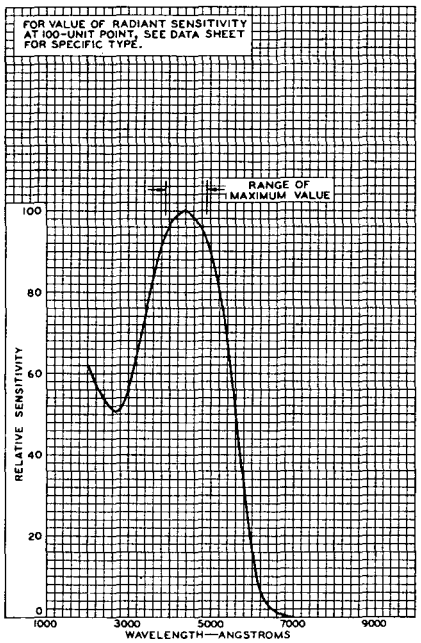

Fig. 9, S-13 Spectral Response

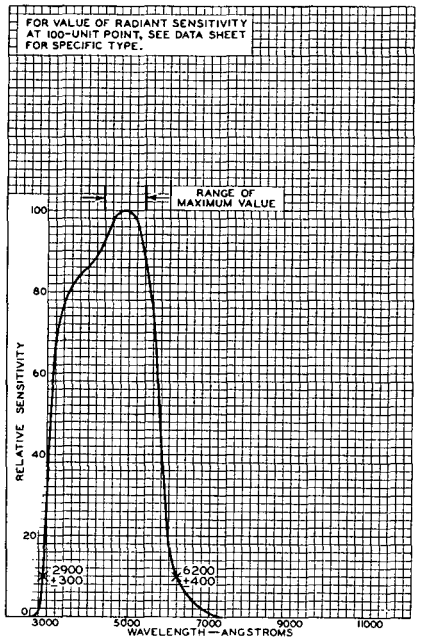

Fig. 10, S-17 Spectral Response

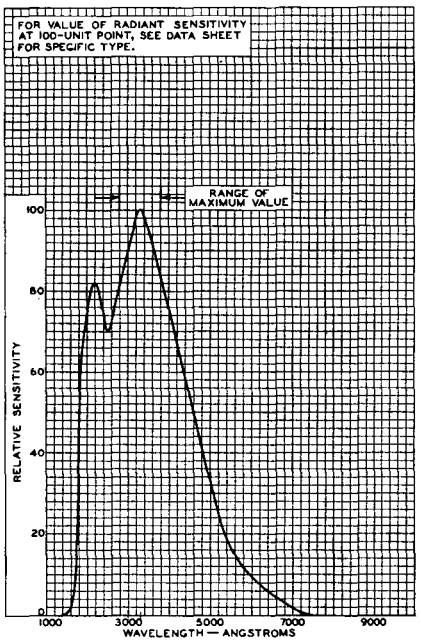

Fig. 11, S-19 Spectral Response

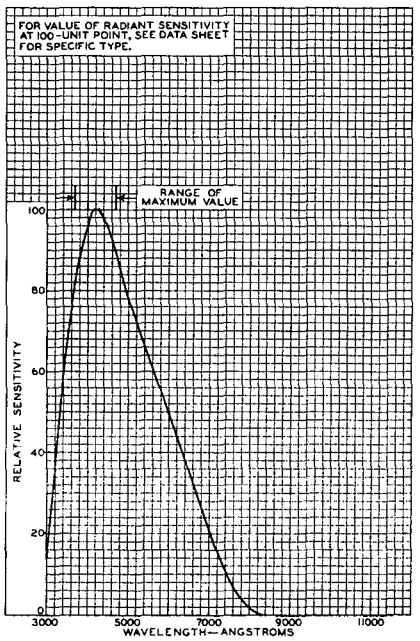

Fig. 12, S-20 Spectral Response

SPECTRAL SENSITIVITY CHARACTERISTICS OF PHOTOTUBES: For equal values of radiant flux at all wavelengths.

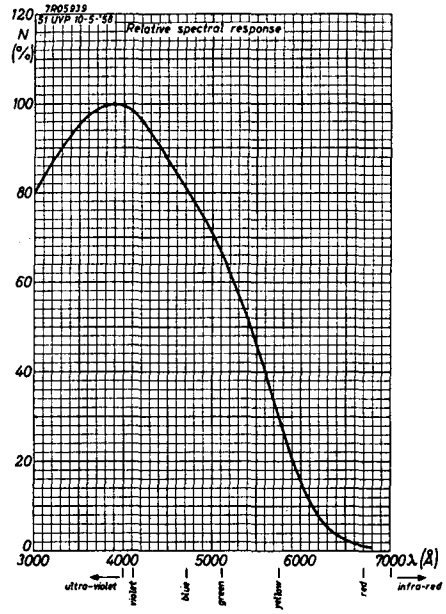

Spectral response of the U-types.

Fig. 13, U Spectral Response
AMPEREX

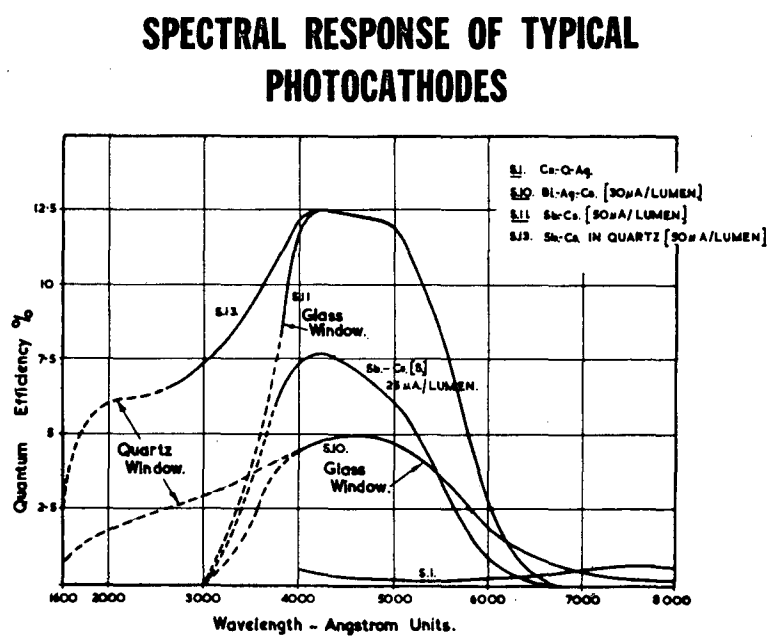

Fig. 14, EMI Spectral Response Curves

PHOTOCATHODE CONTOURS:

The shape of the photocathode is shown without implying its dimensions.

SYMBOL TYPE		CROSS SECTION	EXAMPLE
A	Reflection	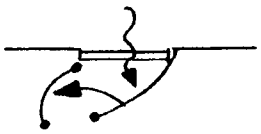	1P21
B	Transmission	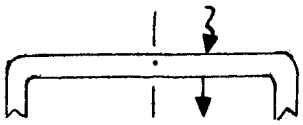	6292, 6655
D	Transmission	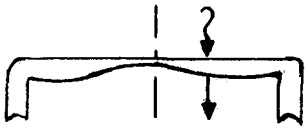	6810-A, C7170
E	Transmission	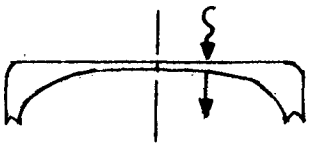	56AVP
F	Transmission	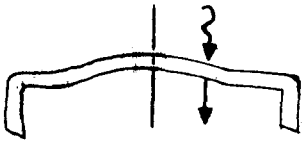	5819
G	Transmission	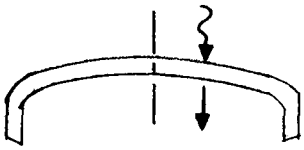	C7251, 7264
H	Transmission	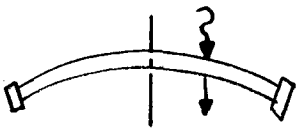	K1328
K	Transmission on top of reflector		7029
L	Transmission	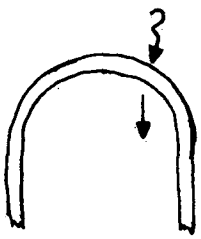	2067

Multiplier Structure:

SYMBOL TYPE

B = Box

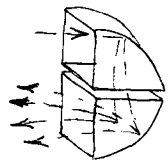

L = Linear

S = Squirrel cage or
Circular Electrostatic

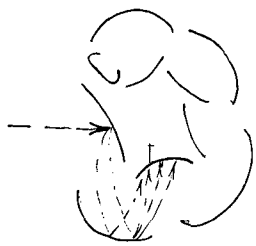

V = Venetian Blind

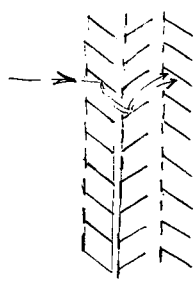

TYPE & MFGR.	DATE OF MFGR. SPEC.	PHOTOCATHODE					MULTIPLIER			ANODE DARK CURRENT @ MEDIAN GAIN	TIME RESOLUTION		PHYSICAL SIZE		NOTES
		SIZE	SPECTRAL RESPONSE Pgs.2-5	QUANTUM EFF. @ MAX. RESP.	SHAPE Pg. 6	NO. OF STAGES	DYNODE SHAPE Pg. 7	DYNODE SURFACE	CURRENT GAIN @ MAX. RATED VOLTAGE		PULSE RISE TIME	CATHODE TIME DIFF.	MAX. OVERALL DIA.	MAX. OVERALL LENGTH	
		inches		eff.@ Å					gain @ V	amp @ gain	nsec	nsec	inches	inches	
RCA 1P21	8-63	5/16x 15/16	S-4	.12	A	9	S	CsSb	$9x10^6$@1250	10^{-8}@$5x10^5$			1-5/16	3-11/16	C7073
RCA 1P22	8-63	5/16x 15/16	S-8	.0078	A	9	S	CsSb	$1.4x10^6$@1250	$1.5x10^{-7}$@$1.3x10^5$			1-5/16	3-11/16	C7104
RCA 1P28	8-63	5/16x 15/16	S-5	.18	A	9	S	CsSb	$5x10^6$@1250	$2.5x10^{-8}$@$5x10^5$			1-5/16	3-11/16	C7045
AMP 52 AVP	3-63	.79	A	.15	B	10	L	AgMgOCs	$3x10^6$@1800	10^{-7}@$5x10^5$			1.01	5.9	
AMP 53 AVP	3-63	1.73	A	.15	B	11	L	AgMgOCs	$4x10^7$@1800	$5x10^{-8}$@10^6	4		2.24	6.0	
AMP 53 UVP	3-63	1.73	U	.15	B	11	L	AgMgOCs	$4x10^7$@1800	$5x10^{-8}$@10^6	4		2.24	6.0	
AMP 54 AVP	3-63	4.4	A	.15	B	11	L	AgMgOCs	@2000	$5x10^{-7}$@$4.2x10^6$			5.1	9.3	
AMP 56 AVP	3-63	1.65	A	.15	E	14	L	AgMgOCs	$1.3x10^9$@2500	$5x10^{-6}$@10^8	2	.5	2.1	7.5	
AMP 56 UVP	3-63	1.65	U	.15	E	14	L	AgMgOCs	$1.3x10^9$@2500	$5x10^{-6}$@10^8	2	.5	2.1	7.5	
AMP 57 AVP	3-63	7.9	A	.13	G	11	L	AgMgOCs	$3x10^7$@2500	10^{-6}@$1.2x10^6$			9.3	12.8	
AMP 58 AVP	3-63	4.3	A	.15	G	14	L	AgMgOCs	10^{-8}@3000	$1.5x10^{-5}$@10^8	2	~1	5.37	11.25	Plexiglass adapter
ITT FW 129	5-62	.100	S-11	.09	B	16	B		$8x10^7$@2250				2	6-1/4	
AMP 150 AVP	3-63	1.26	A	.15	A	10	L	AgMgOCs	$1.6x10^{-7}$@1800	$5x10^{-8}$@10^6			1.56	5	
AMP 150 UVP	3-63	1.26	U	.15	A	10	L	AgMgOCs	$1.6x10^{-7}$@1800	$5x10^{-8}$@10^6			1.56	4.96	
AMP 152 AVP	3-63	.55	A	.88	B	10	L	AgMgOCs	$1.4x10^{-7}$@2000	10^{-7}@$7.5x10^5$			.75	4.13	
AMP 153 AVP	3-63	1.73	A	.16	B	11	L	AgMgOCs	$4x10^{-7}$@1800	$5x10^{-8}$@$8.5x10^5$			2.14	6.0	
ASCOP 541A-08	5-62	.39	Sb Cs	.10	B	14*	V		10^7@3500	$2x10^{-10}$@ -			1.25	5-1/8	12 or 18 Dy. Available
ASCOP 542A-01	5-62	1.46	Sb Cs	.15	-	14	V		10^7@3500	$2x10^{-9}$@ -					Voltage Divide Supplied
ASCOP 543A-01	5-62	1.69	Sb Cs	.15	B	14	V		$2x10^{-7}$@3500	$5x10^{-9}$@ -			1.995	7-1/2	
RCA 931A	8-63	5/16x 15/16	S-4	.09	A	9	S	Cs Sb	$3x10^6$@1250	$5.0x10^{-8}$@$6.7x10^5$			1-5/16	3-11/16	C7075
CBS CL1004	6-62	1.74	S-11	.158	E	14	L	AgMg	$2x10^7$@125V*	$4x10^{-6}$@$3.3x10^7$	2.5	3	2-1/16	6-1/2	
CBS CL1008	1-61	1.74	S-13	.158	B	10	-	AgMg	$2.2x10^5$@105V*	$4x10^{-8}$@$3.3x10^5$			2-1/4	5-3/4	
CBS CL1009	10/59	2.50	S-13	.158	E	10	L	AgMg	$2.2x10^5$@105V*	$4x10^{-8}$@$3.3x10^5$			3-3/32	6-13/16	
CBS CL1012	10/59	1.25	S-11	.158	E	10	L	AgMg	$2.2x10^5$@105V*	$4x10^{-8}$@$3.3x10^5$			1-9/16	5	
CBS CL1016	6-62	2.70	S-11	.158		14	-	AgMg	$2x10^7$@125V*	$6x10^{-7}$@$3.3x10^7$			~3	~7-1/2	
CBS CL1018	6-62	1.74	S-10	.127		10	-	AgMg	$4x10^5$@105V*	$8x10^{-8}$@$4.4x10^5$			~2	~5-3/8	
CBS CL1024	-	1.75	B^{10}+ CsSb	-	-	10	-	-	$2x10^6$@1750	$5x10^{-8}$@ -			2-1/4	5-7/8	Neutron Detector
CBS CL1029	6-62	2.70	S-11	.158		10	-	AgMg	$2.2x10^5$@105V*	$4x10^{-8}$@$3.3x10^5$			~3	~6-5/8	
AMPXP 1010	3-63	1.26	A	.15	B	10	L	AgMg	$1.6x10^7$@1800	$5x10^{-8}$@10^6			1.56	5.0	
AMPXP 1020	1-64	1.65	A	-	E	12	L	-	10^8@3000	$5x10^{-3}$ Max.	2	.4	2.05	7.40	PM 507
AMPXP 1030	2-63	2.5	A	.147	B	10	L	AgMgOCs	$6x10^6$@2000	$2x10^{-7}$@$1.7x10^6$	7	7	3.05	6.25	
AMPXP 1031	2-63	2.5	A	.16	B	10	L	AgMgOCs	$8x10^6$@2000	$2x10^{-7}$@$1.7x10^6$	7	7	2.93	6.25	
AMPXP 1040	2-63	4.3	A	.147	E	14	L	AgMgOCs	10^8@3000	$1.5x10^{-5}$@10^8	2	~1	5.37	11.25	Plane Concave 58 AVP
CBS CL1048	6-62	1.74	S-11	.158		10	-	Cu Be	$1.6x10^5$@105V*	$6x10^{-8}$@$3.3x10^5$			~2	~5-5/8	
CBS CL1050	7-60	0.75	S-13	1.58		14		AgMg	$2x10^7$@125V*	10^{-7}@$3.3x10^7$			2-1/16	6-13/16	
CBS CL1064	7-60	0.3x0.6	RbTe	.15		13		AgMg	10^7@145V*	10^{-11}@10^5			2-1/16	5-9/16	
CBS CL1066	7-62	1.74	RbTe	.02		14		AgMg	10^5@145V*	10^{-11}@10^5			~2	~6-3/4	
CBS CL1067	7-62	1.74	CeTe	.02		14		AgMg	10^5@145V*	10^{-11}@10^5			~2	~6-3/4	
CBS CL1081	7-62	1.74	KNaSb			10		AgMg	$1.3x10^6$@145V*	$2x10^{-8}$@10^6			~2	~5-5/8	
CBS CL1088	7-62	1.74	S-13	.131		10		AgMg	$2.2x10^5$@105V*	$6x10^{-8}$@$4x10^5$			~2	~5-5/8	
CBS CL1089	7-62	.3x.6	RbTe	.15		13		AgMg	10^7@145V*	10^{-11}@10^5			~2	~5-7/16	
CBS CL1090	7-62	1.74	S-11	.158		14	L	AgMgCu Be	$2x10^7$@125V*	$3x10^{-8}$@10^7	2.5	3	2-1/16	6-3/8	
CBS CL1093	7-62	4.36	S-11	.158		14		AgMg	$2x10^7$@125V*	$4x10^{-6}$@$3.3x10^7$			~5	~8-5/8	
CBS CL1095	7-62	14.0	S-11			14		AgMg	$2x10^6$@145V*				~16	~14-1/2	
CBS CL1096	7-62	4.36	S-11	.17		10		AgMg	$2x10^6$@145V*	$4x10^{-6}$@$4.0x10^7$			~5	~7-3/4	
CBS CL1097	7-62	4.36	S-11	.17		10		AgMg	$2x10^6$@145V*	$4x10^{-6}$@$3.3x10^7$			~5	~7-3/4	
CBS CL1107	7-62	4.36	S-11	.158		14		AgMg	$2x10^7$@145V*	$8x10^{-8}$@$3.3x10^6$			~5	~8-5/8	

*CBS - Current Gain @ Maximum Rated Voltage/Dynode.

TYPE & MFGR.	DATE OF MFGR. SPEC.	PHOTOCATHODE					MULTIPLIER			ANODE DARK CURRENT @ MEDIAN GAIN	TIME RESOLUTION		PHYSICAL SIZE		NOTES
		SIZE	SPECTRAL RESPONSE Pgs.2-5	QUANTUM EFF. @ MAX. RESP.	SHAPE Pg. 6	NO. OF STAGES	DYNODE SHAPE Pg. 7	DYNODE SURFACE	CURRENT GAIN @ MAX. RATED VOLTAGE		PULSE RISE TIME	CATHODE TIME DIFF.	MAX. OVERALL DIA.	MAX. OVERALL LENGTH	
		inches		eff.@ Å					gain @ V	amp @ gain	nsec	nsec	inches	inches	
CBS CL1117	7-62	1.74	S-11	.158		14		AgMg	$2x10^7$@125V*	$4x10^{-6}$@$3.3x10^7$			~2	~6-3/8	
CBS CL1125	7-62	1.74	RbTe	.15		13		AgMg	$3x10^5$@145V*	10^{-11}@10^5			~2	~6-5/8	
CBS CL1132	7-62	1.74	S-11	.181		10	-	AgMg	$2x10^6$@145V*	$4x10^{-8}$@$3.3x10^5$			~2	~5-5/8	
CBS CL1136	7-62	1.74	S-1	.0028		14	-	AgMg	10^7@105V*	$5x10^{-9}$@10^6			~2	~6-3/8	
CBS CL1145	7-62	1.74	S-13	.158		14	-	AgMg	$2x10^7$@125V*	$5x10^{-3}$@$3.3x10^7$			~2	~6-3/4	
CBS CL1149	7-62	.3x.6	Rb Te	.15		13	-	AgMg	10^7@145V*	10^{-11}@10^5			~2	~5-7/16	
CBS CL1150	7-62	.75	S-11	.158		14	-	AgMg	$2x10^7$@125V*	$4x10^{-8}$@$3.3x10^5$			~1-1/2	~4-3/4	
CBS CL1158	7-62	1.74	K-NaSb			14	-	AgMg	$6.2x10^5$@145V*	$4x10^{-8}$@10^6			~2	~6-3/4	
Dumont K1209	63	4-3/16	S-7	.158		12	-	AgMg	$2x10^5$@95*	$3x10^{-6}$@$2x10^5$			~5-1/4	~7-3/4	
Dumont K1213	63	2-11/16	S-11	.158		12	B	AgMg	$2x10^5$@95*				3-1/8	7-1/4	
Dumont K1295	63	1-1/2	S-11	.158		12	B	AgMg	$2x10^5$@105*				2-1/4	6-15/16	
Dumont K1303	63	1/2	S-11	.13		6	-	AgMg	$3x10^3$@150*				7/8	2-3/4	
Dumont K1305	63	1-1/2	S-10	.032		10	-	AgMg	$2x10^6$@145*				~2	~4-7/8	
Dumont K1328	63	14	S-11	.11	H	12	B	AgMg	$8x10^5$@105*				16	14-1/4	
Dumont K1361	63	1	S-11	.158		10	-	CsSb	$7.5x10^5$@90*				1-1/2	4-11/16	
Dumont K1384	63	11-1/4	S-11	.11	H	12	-	AgMg	$8x10^5$@105*				12-3/4	12-3/4	
Dumont K1386	63	19-1/4	S-11	.11	H	12	-	AgMg	$8x10^5$@105*				20-11/16	18-17/32	
Dumont K1390	63	2-1/2	S-11	.158		10	-	CsSb	$7.5x10^5$@90*				3-3/32	7-5/16	
Dumont K1391	63	4-3/16	S-11	.158		10	-	CsSb	$7.5x10^5$@90*				5-11/32	7-11/16	
Dumont K1404	63	1/2	S-1	.0016		6	-	AgMg	$3x10^3$@145*				7/8	2-3/4	
Dumont K1428	63	1-1/2	S-11	.158	B	10	-	AgMg	$2x10^6$@145*				2-1/4	5-13/16	Special Photocathode
Dumont K1451	63	1/2	S-10	.032		6	-	AgMg	$3x10^3$@145*				~3/4	~2-3/16	
Dumont K1485	63	2-1/2	S-1	.0025		10	-	AgMg	$5x10^5$@105*				~3	~5-3/8	
Dumont K1527	63	1	S-10	.032		10	-	AgMg	$2x10^6$@145*				~1-1/4	~4	
Dumont K1528	63	1/2	S-10	.032		10	-	AgMg	$1.5x10^5$@105*				~3/4	-	
Dumont K1566	63	1/2	S-13	.127		10	-	AgMg	$1.5x10^5$@105*				0.85	5-1/8	
Dumont K1688	63	1-1/2	S-23	.011	B	10	-	AgMg	10^5@145*				2-1/4	6-3/16	
Dumont K1927	63	1-1/2	S-20	.19	-	10	-	AgMg	$2x10^5$@125*	$3x10^{-8}$@$2x10^5$			~2-1/4	~5-13/16	
Dumont K1961	63	1-1/2	S-11	.158	-	10	-	AgMg	$2x10^6$@145*	-			~2	~4-7/8	
RCA 2020	8-63	1.5	S-11	.11	B	10	S	CuBe	$5x10^6$@1500	$4.5x10^{-8}$@$4x10^5$			2-5/16	5-13/16	Low Resist. Cath.
RCA 2067	10-62	1.24	S-11	.102	L	10	S	-	$2x10^6$@1250	$5x10^{-8}$@$2.3x10^5$			1.56	2.80	Dimen. Less base
Dumont K2142	63	1/2	S-23	Min. .0078	-	10	-	AgMg	$1.5x10^4$@105*				~.85		
Dumont K2167	63	2-1/2	S-20	.19	-	10	-	AgMg	$2x10^5$@145*	-			3-3/32	6-5/16	
Dumont K2173	63	4-3/16	S-20	.19	-	10	-	AgMg	$2x10^5$@145*	-			4-11/32	7-11/16	
Dumont K2190	63	1	S-20	.18	-	10	-	AgMg	$1.5x10^5$@125*	Typical $3x10^{-8}$@$1.5x10^5$			~1-1/4	~4	
Dumont K2199	63	1-1/2	S-11	.158	-	10	-	CsSb	$3x10^6$@105*	$4x10^{-8}$@$3.3x10^6$			2-1/4	5-13/16	
Dumont K2227	63	1-1/2	S-11	.158	-	10	-	AgMg	$2x10^6$@145*	$5x10^{-8}$@$2x10^5$			2-1/4	5-13/16	
Dumont K2242	63	2-1/2	S-11	.158	-	10	-	AgMg	$2x10^6$@145*	$5x10^{-8}$@$2x10^5$			~3	~5-3/8	Ruggedized
Dumont K2244	63	1.68	S-20	.19	-	14	-	AgMg	$3x10^7$@145*	$7.5x10^{-7}$@$3x10^7$			2.06	7-1/2	
Dumont K2253	63	2-1/2	S-11	.158	-	10	-	CsSb	$2.5x10^7$@145*	$4x10^{-8}$@$3.3x10^6$			3-3/32	6-5/16	
Dumont K2276	63	1	S-1	.0049	-	10	-	AgMg	$3x10^5$@70*	$1.5x10^{-6}$@$2.9x10^5$			~1-1/4	~4	
Dumont KM2290	63	1-1/2	S-1	.0049	-	10	-	AgMg	$3x10^5$@70*	$2x10^{-6}$@$2.9x10^5$			2-1/4	5-13/16	
Dumont KM2294	63	5/8x5/8	S-23	.13	-	9	-	AgMg	$5x10^4$@145*	-			~2	~4-7/8	
Dumont KM2328	63	1/2	S-20	.19	-	10	-	AgMg	$4x10^5$@145*	Typical $2x10^{-8}$@$4x10^5$			~3/4	-	
Dumont KM2334	63	1-1/2	S-11	.16	-	13	-	CsSb	$1.1x10^8$@145*	$4x10^{-7}$@$4x10^{+7}$			~2	~5-3/4	
Dumont KM2356	63	1-1/2	S-11	.158	-	10	-	AgMg	$2x10^6$@145*	$5x10^{-8}$@$2x10^5$			2-1/4	4-13/16	
Dumont KM2357	63	5/8x5/8	S-20	.20	-	9	-	AgMg	$1.3x10^5$@145*	-			~2	~4-7/8	
Dumont KM2368	63	1.68	S-11	.158	-	14	-	AgMg	$1.3x10^7$@105*	-			~5	~9	

*CBS - Current Gain @ Maximum Rated Voltage/Dynode.

TYPE & MFGR.	DATE OF MFGR. SPEC.	PHOTOCATHODE					MULTIPLIER			ANODE DARK CURRENT @ MEDIAN GAIN	TIME RESOLUTION		PHYSICAL SIZE		NOTES
		SIZE	SPECTRAL RESPONSE Pgs.2-5	QUANTUM EFF. @ MAX. RESP.	SHAPE Pg. 6	NO. OF STAGES	DYNODE SHAPE Pg. 7	DYNODE SURFACE	CURRENT GAIN @ MAX. RATED VOLTAGE		PULSE RISE TIME	CATHODE TIME DIFF.	MAX. OVERALL DIA.	MAX. OVERALL LENGTH	
		inches		eff.@ Å					gain @ V	amp @ gain	nsec	nsec	inches	inches	
RCA 4438	12-61	1.24	S-11	.102	B	10	S	CsSb	$3.6x10^6$@1250	$5x10^{-8}$@$2.3x10^5$			1.56	3.91	Ruggedized
RCA 4439	1-62	1.24	S-11	.102	B	10	S	CsSb	"	"			1.56	3.91	Dimen.Less base Ruggedized
RCA 4440	8-61	1.24	S-11	.102	B	10	S	CsSb	$3.6x10^6$@1250	$5x10^{-8}$@$2.3x10^5$			1.56	4.12	Ruggedized
RCA 4441A	11-63	1.24	S-11	.102	B	10	S	CsSb	$3.6x10^6$@1250	$5x10^{-8}$@$2.3x10^5$			1.56	3.18	Ruggedized
RCA 4459	11-63	1.68	S-20	.19	G	12	L	-	$4x10^7$@2800	$3.9x10^{-7}$@$2x10^6$	2	0.5	2.06	6.31	
RCA 4460	2-64	.5	S-11	.175	E	10	L	CuBe	$4x10^5$@1500	-			0.755	3.38	
RCA 4461	2-64	1.24	S-11	.175	B	10	S	CuBe	$7x10^5$@1500	-			1.56	3.18	
RCA 4463	12-63	1.68	S-20	.20@4200	B	10	V	CuBe	$5.3x10^5$@2500	$1.2x10^{-8}$@$7.5x10^4$	9		2.31	5.81	
RCA 4464	12-63	2.59	S-20	.20@4200	B	10	V	CuBe	$5.3x10^5$@2500	$1.2x10^{-8}$@$7.5x10^4$	12		3.06	6.31	
RCA 4465	12-63	4.38	S-20	.20@4200	B	10	V	CuBe	$5.3x10^5$@2500	$1.2x10^{-8}$@$7.5x10^4$	15		5.31	7.69	
WEST. 4582	11-60	1/2	S-11	.127	B	10	-	-	$1.5x10^5$@105*	-			3/4	3-7/8	
RCA 5819	8-63	1-11/16	S-11	.11	F	10	S	CsSb	$2.4x10^6$@1250	-			2-5/16	5-13/16	
EMI 6094B	8-61	.39	S-11	.17	-	10	V	CsSb	-	-			1.92		
RCA 6199	8.56	1.24	S-11	.102	B	10	S	CsSb	$2.8x10^6$@1250	$5.8x10^{-8}$@$4.4x10^5$			1-9/16	4-9/16	
RCA 6217	8.63	1-11/16	S-10	.055	F	10	S	CsSb	$2.8x10^6$@1250	$5x10^{-7}$@$5x10^5$			2-5/16	5-13/16	
EMI 6255B	11-63	1.7	S-13	-	-	13	V	CsSb	$7.1x10^7$@1800	$1.5x10^{-7}$@$7.1x10^7$	8		2.02	seated 4.77	
EMI 6097B	11-63	1.7	S-11	.17@4200A	-	11	V	CsSbO	$2.9x10^7$@2150	$4x10^{-8}$@$2.9x10^7$	7		2.0	seated 4.4	
Dumont 6291	63	1-1/4	S-11	.158	B	10	B	AgMg	$2x10^6$@145*	$5x10^{-8}$@$2.15x10^5$			1-9/16	5	
Dumont 6292	63	1-1/2	S-11	.158	B	10	B	AgMg	$2x10^6$@145*	$5x10^{-8}$@$2.15x10^5$			2-1/4	5-13/16	
RCA 6328	8-63	.93x.31	S-4	-	A	9	S	CsSb	-	-			1.31	3.12	
RCA 6342A	9-58	1.68	S-11	.181	D	10	S	CuBe	$7x10^5$@1500	$4x10^{-8}$@$2.5x10^5$	3	4	2.31	5.81	was AgMg dynode
Dumont 6362	63	1/2	S-11	.127	B	10	B	AgMg	$1.5x10^5$@105*	$5x10^{-8}$@$1.5x10^5$			25/32	5-3/16	
Dumont 6363	63	2-1/2	S-11	.158	B	10	B	AgMg	$2x10^6$@145*	$5x10^{-8}$@$2.15x10^5$			3-3/32	6-5/16	
Dumont 6364	63	4-3/16	S-11	.158	B	10	B	AgMg	$2x10^6$@145*	$5x10^{-8}$@$2.15x10^5$			5-11/32	7-11/16	
Dumont 6365	63	1/2	S-11	.158	B	6	B	AgMg	$3x10^3$@150*	10^{-5}@$3x10^3$			7/8	2-3/4	
Dumont 6467	63	1	S-11	.158	B	10	B	AgMg	$2x10^6$@145*	$5x10^{-8}$@$2.15x10^5$			1-1/2	4-11/16	
RCA 6472	8-63	15/16x5/16	S-4	-	A	9	S	CsSb	-	-			1-3/16	2-3/4	
RCA & Dum 6655A	8-63	1.68	S-11	.12	D	10	S	CsSb	$4.4x10^6$@1250*	$4x10^{-8}$@$3.6x10^5$	3	4.5	2.31	5.81	C7189
RCA 6810A	8-63	1.68	S-11	.158	D	14	L	CuBe	10^8@2400	$4x10^{-6}$@$2.9x10^7$	3	3	2.38	7.5	was AgMg dynodes C7187C
RCA 6903	8-63	1-5/8	S-13	.13	B	10	L	CsSb	$2.2x10^6$@1250	$1.2x10^{-7}$@$3.3x10^5$			2-5/16	6-9/16	
Dumont 6911	63	1-1/2	S-1	.0025	B	10	B	AgMg	$5x10^5$@105*	$1.5x10^{-5}$@$5x10^5$			2-1/4	5-13/16	
Dumont 6935	63	1/2	S-11	.127	B	10	B	CsSb	$3x10^5$@105*	10^{-7}@$3x10^5$			25/32	6-1/8	
RCA 7029	8-63	.65x.5	S-17	.21	K	10	S	CsSb	$1.8x10^6$@1250	$8x10^{-9}$@$1.6x10^5$			1.56	3.75	
RCA 7046	8-63	4-7/16	S-11	.13	D	14	L	AgMg	$2x10^7$@3400	$6x10^{-6}$@$8.3x10^6$		4	5-1/4	11-1/8	May be CuBe Dynodes Extended
Dumont 7064	63	1-1/2	S-11	.158	B	10	B	CsSb	$7.5x10^5$@90*	$5x10^{-8}$@$7.5x10^5$			2-1/4	5-13/16	
Dumont 7065	63	1-1/4	S-11	.158	B	10	B	CsSb	$7.5x10^5$@90*	$5x10^{-8}$@$7.5x10^5$			1-19/16	5	
RCA 7102	8-63	1.24	S-1	.0042	B	10	S	AgMg	$5x10^5$@1500				1.56	4.57	May be CuBe Dynodes C7160
RCA 7117	3-58	.93x.31	S-4		A	9	S	CsSb	@1250				1.31	3.12	C7253
RCA C-7151C C-7151D C-7151E C-7151F	9-61	1.24	S-11	.10	B	10							1-9/16	4-9/16	Ruggedized 6199 (F) UV FACE
RCA C-7151I	2-64	1.24	S-11	.10	B			SbNi	$3x10^6$@1250				1.56	3.5	Min. Ferro-Magnetic
RCA C-7151J	2-64		S-11					SbNi	$3x10^6$@1250				1.56	3.5	
RCA C-7151K	2-64		S-11					SbCuBe	$3x10^6$@				1.56	3.5	
RCA C-7187D	2-61	None				14	L	AgMg					2.38	7.50	Unsealed
RCA C-7187E	2-61	None				14	L	AgMg					2.38	7.50	Sealed
RCA C-7187J	2-61	None				14	L	CuBe					2.38	7.50	Unsealed
RCA C-7187K	2-61	None				14	L	CuBe					2.38	7.50	Sealed
RCA 7200	4-58	.94x.31	S-19	.24	A	9	S	CsSb	$4x10^6$@1250				1.31	5.69	
RCA 7264	8-63	1.68	S-11	.158	G	14	L	AgMg	10^8@2400	10^{-6}@$2.9x10^7$	3	1	2.38	7.50	May be CuBe dynodes (C7251)

*CBS - Current Gain @ Maximum Rated Voltage/Dynode.

TYPE & MFGR.	DATE OF MFGR. SPEC.	PHOTOCATHODE					MULTIPLIER			ANODE DARK CURRENT @ MEDIAN GAIN	TIME RESOLUTION		PHYSICAL SIZE		NOTES
		SIZE	SPECTRAL RESPONSE Pgs.2-5	QUANTUM EFF. @ MAX. RESP.	SHAPE Pg. 6	NO. OF STAGES	DYNODE SHAPE Pg. 7	DYNODE SURFACE	CURRENT GAIN @ MAX. RATED VOLTAGE		PULSE RISE TIME	CATHODE TIME DIFF.	MAX. OVERALL DIA.	MAX. OVERALL LENGTH	
RCA 7265	8-63	1.68	S-20	.19	D	14	L	CuBe	$2x10^8$@3000	$2x10^{-7}$@$6.7x10^6$	3	3	2.38	7.5	Was AgMg
RCA 7267	2-59	1.69	S-13	.158	B	14	L		10^8@2400	10^{-6}@$2.9x10^7$	3	6	2.38	7.5	
RCA C7268	12-61	1.68	S-20	.19	B	14	L		@3000				2.30	7.5	
RCA 7326	8-63	1.68	S-20	.19	D	10	L	AgMg	$1.6x10^6$@2400		2.5	3	2.38	6.78	May be CuBe dynodes (7261)
Dumont 7664	63	1-1/2	S-13	.158		10		AgMg	$2x10^6$@145*	$5x10^{-8}$@$2.15x10^5$			2-1/4	5-13/16	
RCA 7746	8-63	1.68	S-11	.158	G	10	L	CuBe	$8x10^7$@2500		2	.5	2.31	6.12	C7260B
RCA 7764	8-63	.5	S-11	.175	E	6	L	CuBe	$1.4x10^4$@1500				0.78	2.75	C7291
RCA 7767	6-60	1/2	S-11		E		L		$4.2x10^5$@1500				.755	4.0	
CBS 7817	9-60	1.75	S-11	.18	E	10	L	AgMg	@2000		2.5	3	2-1/4	5-3/4	Or CuBe
CBS 7818	1-61	2.70	S-11	.169	E	10	L	AgMg	@2000		3	9	3-1/16	6-1/4	Or CuBe
CBS 7819	1-61	4.36	S-11	.169	E	10	L	AgMg	@2000				5-11/32	7-7/8	Or CuBe
RCA 7850	1-61	1.68	S-11	.158	G	12	L	CuBe	$2.6x108$@2600	$2.4x10^{-6}$@$8.6x10^7$	2	.5	2.06	6.31	C70007A
Dumont 7860	63	1/2	S-11	.127	B	10	B	AgMg	$1.5x10^5$@105	$5x10^{-8}$@$15x10^5$			25/32	4-1/8	
West 7908	3-62	1/2	S-11	.127		10							7/8	5-1/2	Base-Potted Flexible Lead
West 7909	1-62	1/2	S-11	.127		10	L						7/8	5-1/2	Base-Potted Flexible Lead
RCA 8053	10-61	1.68	S-11	.169	B	10	V	CuBe	$1.6x10^6$@2000	$4.0x10^{-9}$@$1.2x10^5$			2.31	5.81	C70109
RCA 8054	5-61	2.59	S-11	.169	B	10	V	CuBe	$1.6x10^6$@2000	$4.0x10^{-9}$@$1.2x10^5$			3.06	6.31	70030
RCA 8055	8-63	4.38	S-11	.169	B	10	V	CuBe	$1.6x10^6$@2000	$4.0x10^{-9}$@$1.2x10^5$			5.31	7.69	
Dumont 8062	63	1	S-1	.0025	B	10			$5x10^5$@105*	$1.5x10^{-5}$@$5x10^5$			1-5/16	4-3/4	
EMI 9514B	11-63	1.7	S-11			13	V	CsSbO	$7.1x10^7$@1800	$1.5x10^{-7}$@$7.1x10^7$	8		2.00	seated 4.77	
EMI 9514S	11-63	1.7	S	.14@4200A		13	V	CsSb	10^7@2100	$3x10^{-8}$@10^7	8		2.00	seated 4.77	
EMI 9524B	11-63	.91	S-11			11	B	CsSbO	$7.1x10^6$@1500	$2.0x10^{-8}$@$7.1x10^6$	10		1.13	seated 4.4	
EMI 9524S	11-63	.91	S	.14@4200A		11	B	CsSb	10^7@1700	$5x10^{-9}$@10^7	10		1.13	seated 4.4	
EMI 9526B	11-63	.91	S-13	.14@4200A		11	B	CsSbO	$7.1x10^6$@1500	$2.0x10^{-8}x7.1x10^6$	12		1.20	seated 4.4	
EMI 9530B	11-63	4.37	S-11	.17@4200		11	V	CsSbO	$2.9x10^7$@2400	$2x10^{-6}$@$2.9x10^7$	16		5.1	seated 6.7	
EMI 9531B	11-63	3.0	S-11	.17@4200		11	V	CsSbO	$2.5x10^7$@2500	10^{-6}@$2.5x10^7$	12		3.6	seated 6.1	
EMI 9536B	11-63	2.0	S-11	.17@4200		10	V	CsSbO	$7.1x10^6$@1750	$7x10^{-8}$@$7.1x10^6$	6		2.25	4.9	
EMI 9536S	11-63	2.0	S	.17@4200		10	V	CsSbO	10^7@1800	$1.5x10^{-8}$@10^7	6		2.25	4.9	
EMI 9545B	11-63	9.85	S-11	.17@4200		11	V	CsSbO	$3.3x10^7$@2900	$3x10^{-6}$@$3.3x10^7$	25		112.2	14.2	
EMI 9552B	11-63	2.0	S-13	-		10	V	CsSbO	$7.1x10^6$@1750	@$7.1x10^6$	6		2.25	seated 5.63	
EMI 9558B	11-63	1.7	S-20	.14-.20@4200		11	V	CsSb	$3.7x10^6$@1650	$6x10^{-9}$@$3.7x10^6$	8		2.0	seated 5.5	
EMI 9578B	11-63	2.5	S-11	.17@4200		10	V	CsSbO	10^{-7}@1750	$2.9x10^6$@10^{-7}	11		3.1	5.4	
EMI 9579B	11-63	4.37	S-11	.17@4200		10	V	CsSbO	$2.9x10^6$@1800	$2x10^{-7}$@$2.9x10^6$	15		5.0	6.73	
EMI 9618B	11-63	4.37	S-11	.17@4200		11	V	CsSbO	$2.9x10^7$@2400	$2x10^{-6}$@$2.9x10^7$	10		5.1	6.7	
EMI 9623B	11-63	6.77	S-11	.17@4200		11	V	CsSbO	$4.0x10^7$@2400	10^{-6}@$4.0x10^7$	20		7.5	8.8	
RCA C70014	6-61	1.24	S-11	.18	-	10	?	CuBe	-	-			1-9/16	3-3/16	Ruggedized
RCA C70014A	2-62	1.24	CsSb	.18	B	12	?	CuBe					1-9/16	3-3/16	UV Face Ruggedized
RCA C70030D	2-62						V		Lorad Glass 10 Counts/min/Kg or 6% of comp. Glass						Sec 8054
RCA C70038B	3-63	.5x.65	-	.27	K	10	S	-	@1500	-			1.56	3.56	
RCA C70042A	1-63	.5	S-20	.169	E	10	L	CuBe	@1800				.155	3.7	
RCA C70043D	2-62						V		Lorad Glass 10 Counts/min/Kg or 6% of Comp. Glass						Sec 8055
RCA 70045A	8-63	1.2	Ext. S-11	.18	H	14	L		10^7-$1.3x10^8$@6000			.5	3.25 + 1.75	10.5	
RCA C70045C	2-64	1.2	-	.18	H	14	L	-	10^6@6000				3.25 + 1.75	10.5	
RCA C70046	1-61	1.68	S-20	.19	G	10	L	-	@2800				2.31	6.12	S-20-7746
RCA C70101	9-62	1.68	S-20	.19	G	12	L	CuBe	@2800		2	.5	2.06	6.31	

*CBS - Current Gain @ Maximum Rated Voltage/Dynode.

TYPE & MFGR.	DATE OF MFGR. SPEC.	PHOTOCATHODE					MULTIPLIER			ANODE DARK CURRENT @ MEDIAN GAIN	TIME RESOLUTION		PHYSICAL SIZE		NOTES
		SIZE	SPECTRAL RESPONSE Pgs.2-5	QUANTUM EFF. @ MAX. RESP.	SHAPE Pg. 6	NO. OF STAGES	DYNODE SHAPE Pg. 7	DYNODE SURFACE	CURRENT GAIN @ MAX. RATED VOLTAGE		PULSE RISE TIME	CATHODE TIME DIFF.	MAX. OVERALL DIA.	MAX. OVERALL LENGTH	
		inches		eff.@ Å					gain @ V	amp @ gain	nsec	nsec	inches	inches	
RCA C70101B	11-63	1.68	-	.24@3342	G	12	L	CuBe	@3000		1.8		2.06	6.31	BiAlkali 7850
RCA 70113	6-61	1.24	S-11	.10	-	10	S	CsSb					1-9/16	3-3/16	Ruggedized
RCA C70113A	2-62	1.24	CsSb	.102	B	10	S	-					1.56	3.18	UV Face 4441
RCA C70116	9-62	1.68	-	.18	G	10	L	CuBe					2.15	6.12	Silica Face
RCA C70117	7-63	1.68	-	.18	G	12	L	CuBe			2	.5	2.15	6.31	Silica Face
RCA C70120E	9-62	NO CATHODE				14	V	CuBe	Venetian Blind Multiplier						
RCA C70121	8-61	1.24	S.11	.11	-	10	-	CuBe	@1500				1-9/16	4-9/16	
RCA C70122	6-62	1.68	S-13	.147	G	10	L	CuBe					2.31	6.12	Silica Face
RCA C70124	12-61	1.68	S-13	.175	G	8	L	-					2.31	6.12	Fused Silica Pt.Substrate
RCA C70127	7-62	.5	CsTe	.05@2537	E	12	-	-					13/16	3.8	UV Detector
RCA C70128	7-62	.5	CsTe	.05@2537	E	12	-	-					13/16	3.8	Lif.Face UV Detector
RCA C70129B	2-64	.060x.375	S-4	.09@4000	A	8	S	SbCuBe	6.5×10^{6}@1250				.51	1.37	Ruggedized
RCA C70131	9-62	NO CATHODE			-	14	L						3.105	1.75	No Envelope
RCA C70133	4-64	4.75	Ext. S-11	.176	H	14	L	CuBe	@3000	1.9×10^{-6}@8×10^{7}	3.5		5.25	10.5	
RCA C70136 RCA C70136A RCA C70136B	2-62						L								Potted Voltage Divider 7767
RCA C70145	2-64	2.75		.183@4400Å	B	10	V		1.7×10^{6}@2000	4.0×10^{-9}@1.1×10^{5}			3.06	8	Al_2O_3 window

*CBS - Current Gain @ Maximum Rated Voltage/Dynode.

REFERENCES

1. Allen B. DuMont Laboratories, "DuMont Multiplier Phototubes", 1963.

2. ASCOP Division of Electro-Mechanical Research, Inc. "Preliminary Specifications - Photomultiplier Tubes".

3. CBS Laboratories, "Photomultiplier Tubes", 1962 and revised by private communication 1963.

4. E.M.I./US Electron Tube Division, Photomultiplier Tubes.

5. I.T.T. Industrial Laboratories, Multiplier Phototubes, "Data Sheets".

6. Philips Electron Tube Division, Philips Photomultiplier Tubes, 1963.

7. Radio Corporation of America, RCA Tube Handbook HB-3 Photosensitive Device Section, also data sheets.

8. Westinghouse Electric Corp., Electronic Tube Division, "Westinghouse Tentative Data Sheets".

9. Q. A. Kerns, Phototube Measurements I - Photocathode Sensitivity, Eng. Note EE-4311-03, E-9.

DAM:mt

File No. CC 8-3B (1)
F. Kirsten
Rev. March 5, 1964
C. Kerns
Rev. May 5, 1966
C. Dumm

Lawrence Radiation Laboratory, University of California, Berkeley

COUNTING NOTE

PHOTOTUBE MEASURING TECHNIQUES

I. ABSTRACT

This note *describes the testing methods used at UCLRL to determine the suitability of multiplier phototubes for nuclear counting applications. It also explains the code in which the results of the tests are placed on each tube. These tests are performed on all newly purchased tubes of the type numbers enumerated below, as well as on tubes returned to stock.

II. TUBE MARKINGS

The types of multiplier phototubes listed below are presently being tested in the way described in this note. The results of the tests are recorded on white stickers which are then placed on the keys on the bases of the tubes. The method of coding is illustrated below.

1. Tube Types

2067, 6655, 6655A, 6342A

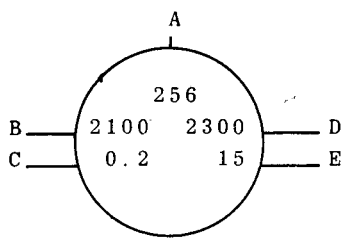

CL1090, 6810A C7251, 7264, 7265, 8575

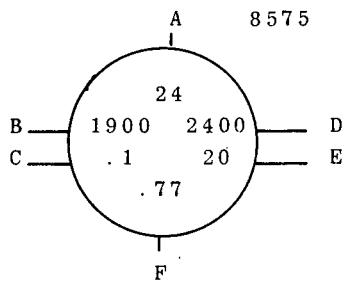

7046, C-70133

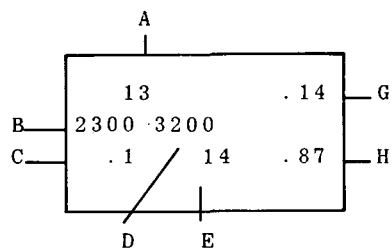

2. Code Index

A. UCRL serial number. This number should be referred to in requesting further information regarding the tube from Physics Technical Support, Electronics Engineering.

B. Standard gain supply voltage. The supply voltage required to obtain the standard anode-pulse current gain using the voltage dividers listed in Table I.

Standard current gains: 6655A, 6342A, 2067 ..... 2.5×10^5

6810A, C7251, 7264, CL1090, 7046, 7265, 8575, C-70133 ..... 3.0×10^7

C. Anode dark current (in microamps) at the Voltage of Code B.

D. Maximum operating supply voltage - the voltage giving the maximum useful gain, beyond which voltage the operating characteristics of the tube become impaired.

* These methods were initially described by Bill Jackson, "Checking Multiplier Phototubes for Nuclear Counting Applications", Engineering Note EE-494.

2. (Continued)

E. Quantum efficiency (in per cent) of the photocathode measured at a wavelength of 4200 Å.

F. Optimum focus electrode (G1) voltage - the ratio V_{K-G1}/V_{K-D1} at which the maximum anode pulse amplitude is obtained with the entire cathode illuminated by a mercury-capsule light pulser.

G. Optimum G1 voltage (7046). The ratio V_{K-G1}/V_{K-G2} at which the condition of Code F is fulfilled.

H. Optimum G2 voltage (7046). The ratio V_{K-G2}/V_{K-D1} at which the condition of Code F is fulfilled.

These quantities are described in more detail below.

III. TESTING PROCEDURE

The testing methods described below were developed to test multiplier phototubes for characteristics important to counting applications.

1. Impedance Check.

A check is made for open leads and short circuits between the tube electrodes using the interelectrode impedance checker.[1] In making these short and open tests, an ac voltage whose peak value is approximately the rated interelectrode voltage is impressed in turn between each electrode and all other electrodes. This is done with the tube at rest and when it is subjected to an acceleration of about 5g.

2. Standard Gain Supply Voltage[2] (Code B).

The applied voltage necessary to obtain a specified pulse current gain is measured. The light source is a mercury-capsule light pulser[3] and the output current is read as the deflection of the trace on a 5XP-type CRT. The dynode voltage distributions employed in this test are listed in Table I along with the values of the pulse gain to which test results refer.

In the case of tubes for which optimum focus electrode voltages (Codes F or G and H) are listed, the standard gain supply voltage is measured with the focus electrodes set at these voltages.

The light pulses are short enough so that after pulsing does not affect the results of the pulse gain measurements.

[1] F. Kirsten, "A Study of Defective RCA-6810 Multiplier Phototubes" UCRL 3430 Rev.

[2] Due to some ferromagnetic parts in tubes they may become permanently magnetized when carried or left in high ambient magnetic fields. This magnetism can deflect electron paths in the tube and thereby reduce the gain by several orders of magnitude. Tubes which may have been exposed are degaussed before gain measurements are made.

[3] Q. Kerns, F. Kirsten, G. C. Cox, "A Generator of Fast-rising Light Pulses for Phototube Testing" UCRL 8227 (March 1958), also Review of Scientific Instruments, Vol. 30, No. 1, 31-36 (Jan. 1959)

3. Anode Dark Current (Code C).

The anode dark current is measured at the voltage at which the standard pulse gain is obtained. The main component of this dark current consists of thermionic electrons released by the cathode and amplified by the multiplier. The magnetic shield surrounding the tube is electrically tied to the cathode potential during this measurement.

4. Maximum Operating Supply Voltage (Code D).

This is the maximum dc supply voltage at which it is recommended that the tube be operated while using the voltage distribution listed in Table I. In determining this figure, the supply voltage is gradually raised until: a) the tube reaches a regenerative condition at which the dark current rises spontaneously until limited by the voltage divider; or b) the anode dark current exceeds approximately 0.1 mA. It will generally be found that if the tube is operated at voltages greater than this value, the performance (i.e., pulse gain, dark current) will be erratic and unreliable.

With the lower gain specimens of a given tube type, the value of maximum operating supply voltage determined in the way described above may exceed the maximum supply voltage as specified by the manufacturer.

5. Photocathode Quantum Efficiency (Code E).

The quantum efficiency of the photocathode is determined by measuring its response to a calibrated light source that emits light of wavelengths centered about 4200 Å, which is near the wavelength of maximum response of S4, S8, S11, S13 and S20 photocathodes. The frequency spectrum of this light is determined by a blue filter (Corning No. 5113) having its maximum transmittance at 4200 Å, with a bandwidth at half-maximum of 840 Å. The tube is connected as a photodiode in making this test: 200 V is applied between the cathode and all other electrodes, the latter constituting an anode. The area of the photocathode exposed to the light source is limited by a circular aperture of area as specified by the manufacturer as being the useful cathode area. The photocurrents are of the order of one microampere. Interelectrode leakage currents do not affect the results.

The sensitivity of the photocathode in microamps per microwatt of 4200 Å light may be found by dividing the quantum efficiency (in decimal form) by 2.95, the energy of 4200 Å photons in electron volts. Thus a tube of 15% quantum efficiency has a radiant cathode sensitivity of 0.15/2.95 = 0.051 microamp/microwatt @ 4200 Å.

6. Optimum Focus-electrode Voltages (Codes F, G, H).

The values of focus-electrode voltages giving maximum anode sensitivity are determined for certain tube types where these voltages are critical, or where pronounced variations among tubes of the same type have been found. These voltages are expressed as ratios. For example, the figures for G1, the focus electrode of a 7264 are given as the optimum ratio of V_{K-G1}, the voltage between cathode and G1, to V_{K-D1}, the voltage between cathode and D1.

In making these determinations, the entire cathode is illuminated. It is sometimes true that other values of these voltages give better tube performance where only portions of the cathode are to be used.

By using the values of focus-electrode voltages quoted on the stickers, it is possible to design and build voltage dividers for the individual tubes with the focus-electrode voltages correctly proportioned, without the necessity for potentiometers or other means of adjustment.

IV. GENERAL COMMENTS

Owing to differences in processing, etc., there is, in general, a wide variation in anode current gains among tubes of the same type measured at a given supply voltage. For example, at 1900 volts, the current gains of individual 6810's may range from 10^6 to 10^8. Tube "A" with lower gain will have marked on it a higher value of "Standard gain supply voltage" than tube B, since it requires more voltage to obtain a given gain. However, the two tubes may be equally satisfactory in service, tube A simply requiring higher supply voltages than tube B. In most multiplier phototubes, the maximum obtainable useful gain is limited by regeneration due to light or ion-feedback, rather than voltage breakdowns. Thus there is no general reason why tube A may not have as high a maximum useful gain as tube B. Of the several known sources of noise (i.e. undesired light) within multiplier phototubes, some are more prone to appear at higher voltages, and for this reason the lower gain tube may be at a disadvantage, but this question can be resolved by comparing the dark currents: if they are about the same, one can expect about equal numbers of noise pulses.

Another consideration is time spread* in the multiplier and in the cathode region. In general, the magnitude of time spread is inversely proportional to:

$$\text{voltage}^n \text{ , where } \tfrac{1}{2} < n < 1.$$

Thus, in this respect, the lower gain tube has an advantage: at a given gain, it should have the lower value of time spread.

The testing facilities, presently located in Building 14, are also available for rechecking of tubes already in use. Specialized tests, not routinely performed, may be made either at Building 14 or by the Physics Instrumentation Research Group, Electronics Engineering.

CK:mt

*See CC 5-8 for definition.

TABLE I

Voltage dividers used in making the tests described in this report. Nominal ratios of voltage are listed. In the actual dividers, these ratios are matched as closely as is possible with the standard stock resistors of 5% tolerance.

	6342A, 6655A 8.3% of supply voltage multiplied by	CL1090, 6810A C7251, 7264 5.4% of supply voltage multiplied by	7046 5.3% of supply voltage multiplied by	8575 C31000 6.1% of supply voltage multiplied by	C-70133	
Cathode & Grid 1	(2.0) 1.5	(2.0) ~1.5*	(4.2) **	(4.0) ~3.2*	(3.0) ~2.4*	
Grid 1 & Grid 2			**			
Grid 1 & Dynode 1	0.5	~0.5*		~0.8*	~0.6*	
Dynode 1 & Dynode 2	1.0	1.0	1.0	1.0	1.0	
Dynode 2 & Dynode 3	1.0	1.0	1.0	1.0	1.0	
Dynode 3 & Dynode 4	1.0	1.0	1.0	1.0	1.0	
Dynode 4 & Dynode 5	1.0	1.0	1.0	1.0	1.0	
Dynode 5 & Dynode 6	1.0	1.0	1.0	1.0	1.0	
Dynode 6 & Dynode 7	1.0	1.0	1.0	1.0	1.0	
Dynode 7 & Dynode 8	1.0	1.0	1.0	1.0	1.0	
Dynode 8 & Dynode 9	1.0	1.0	1.0	1.0	1.0	
Dynode 9 & Dynode 10	1.0 (Dy9-Anode)	1.0	1.0	1.0	1.0	
Dynode 10 & Dynode 11		1.0	1.0	1.0	1.0	
Dynode 11 & Dynode 12		1.25	1.0	1.0	1.0	
Dynode 12 & Dynode 13		1.5	1.0	1.0 (Dy12-Anode)	1.0	
Dynode 13 & Dynode 14		1.75	1.0		1.0	
Dynode 14 & Anode		2.0 Accelerating electrode connected to Dynode 14	1.0	Shield tied to Dy5	1.0	

(X2 Divider of CC 8-3)

* The tests are made with Grid 1 adjusted as described in Section F. The voltage between Cathode and Dynode 1 is maintained at 4.0.

** For 7046 tubes, the tests are made with Grids 1 and 2 adjusted as described in Section G,H. The voltage between cathode and dynode 1 is maintained at 4.2. Thus, 23% of the supply voltage appears between cathode and dynode 1.

File No. CC 8-4A (1)
F. Kirsten
Rev. March 5, 1964
C. Kerns

Lawrence Radiation Laboratory, University of California, Berkeley

COUNTING NOTE

6810 CLASS PHOTOMULTIPLIER SPECIAL CHARACTERISTICS

14 Stage: 6810*, 6810A, C7187*, C7187C*, C7251*, 7264, 7265, CL1090

16 Stage: C7232A

I. SUMMARY

In most respects, C7187 is identical to 6810, C7187C to 6810A, C7251 to 7264. The C-numbers are RCA developmental numbers used before the tubes were assigned the permanent EIA numbers. All of these tube types use the same multiplier and base structure. The main differences are in the construction and performance of the cathode and focusing electrode(s) structures, and in that the C7232A has 16 multiplier stages, the rest 14.

II. BRIEF CHARACTERISTICS

		Further Details
Manufacturer	RCA and CBS. See data sheets for details not included here.	
Cathode Shapes	Flat, partially curved and fully curved.	Sec. III, IV
Focusing Electrode		Sec. V
Cathode	Semi-transparent; S11 response; nominal diameter 2 inches; average sensitivity as measured by UCRL - 0.075 μs/μw.	Sec. VI
Voltage Dividers		Sec. VII
Current Gain and Sensitivity	Average 14 stage tube has usable gain $>10^8$, corresponding to anode sensitivity of 6 amp/μw (8000 amp/lumen). Average 16 stage tube has usable gain $>10^9$.	Sec. VIII
Transit Time	50 nanoseconds @ 2000 V, X2 divider.	Sec. IX
Maximum Anode Current	Saturated output current @ 2500 V using X6 voltage divider, 0.5 amps.	Sec. X
Maximum Operating Voltage		Sec. XI
Miscellaneous		Sec. XII

*No longer manufactured.

III. CATHODE SHAPES

The various curvatures used in the cathodes of these tubes represent efforts to minimize cathode transit-time difference, see Section IV.

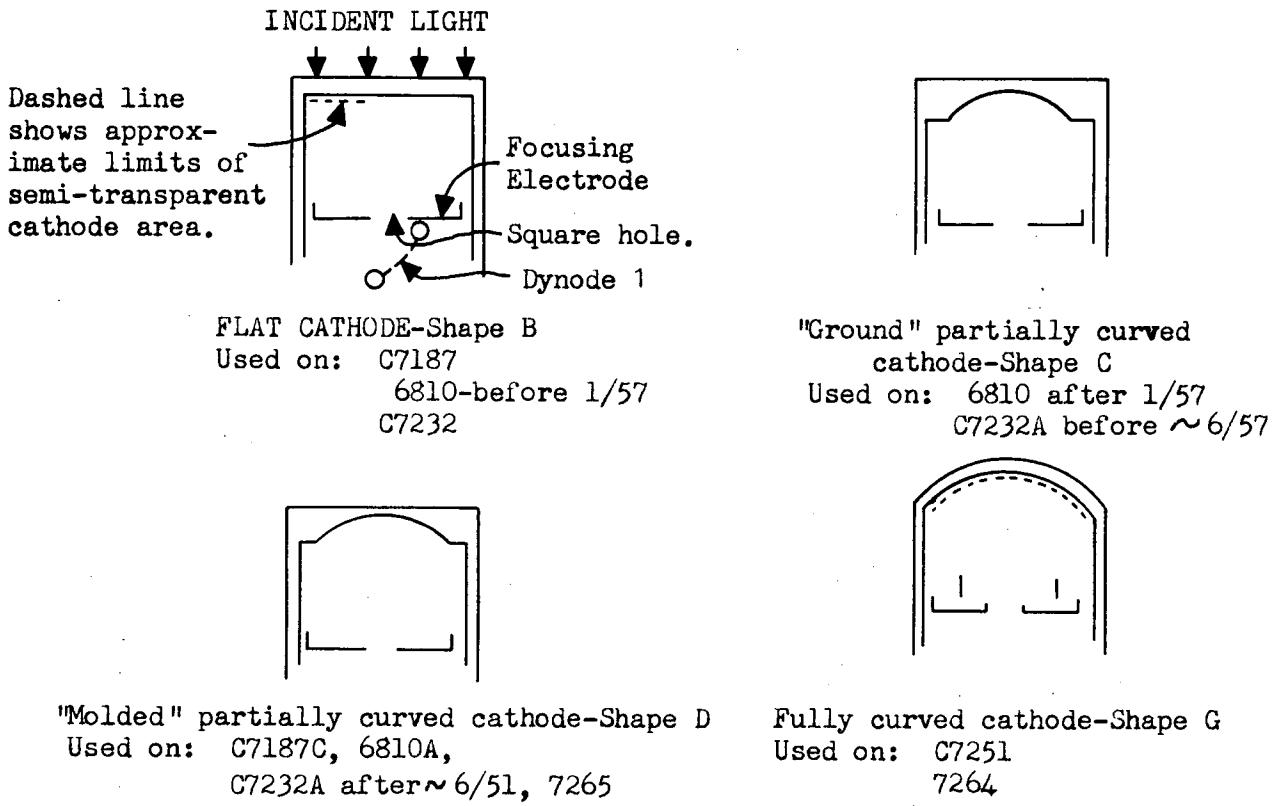

Fig. 1 - Cross-sectional views showing the various cathode shapes.

IV. CATHODE TRANSIT-TIME DIFFERENCE

In Fig. 2, curves of cathode transit-time difference (CTTD) are shown for typical samples of each of the cahode shapes illustrated in Fig. 1. These curves of CTTD are typical. Variations may be expected among tubes of the same type, particularly among tubes of the C7251, fully curved cathode type. Fig. 2c is a typical curve for the C7251 type. Fig. 2d shows the extremes in CTTD characteristics that have been observed in C7251 tubes. The curves were all measured with cathode-dynode 1 voltages of 250-300 volts. Estimates of the characteristic for other voltages can be made using the relation that the magnitude of CTTD varies inversely as the square root of the voltage.

In general, CTTD curves recorded for tube diameters perpendicular to the long dimension of the dynodes are different from curves for parallel diameters. The CTTD curves for most of these tubes have a hook near the base-pin 4 edge of the cathode; the photoelectron collection efficiency is usually relatively poor in this same region. The measured CTTD includes the effect of differences in transit-time from dynode 1 to dynode 2. In general, photoelectrons from different parts of the cathode are focused onto different parts of dynode 1.

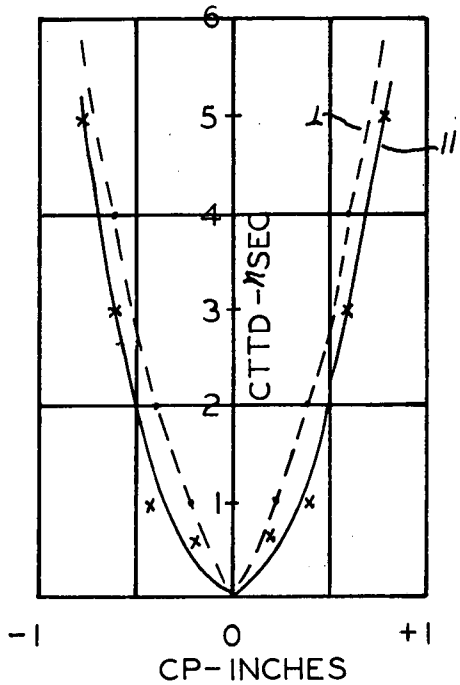

a) Flat cathode - Shape B

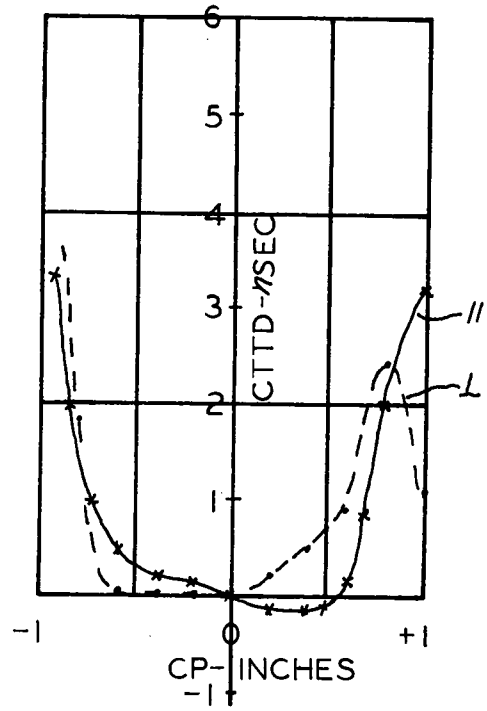

b) "Molded" partially curved cathode-Shape D. (Shape C similar.

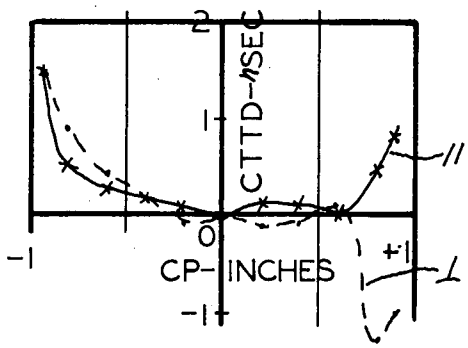

c) Fully-curved cathode - Shape G. Typical CTTD curve.

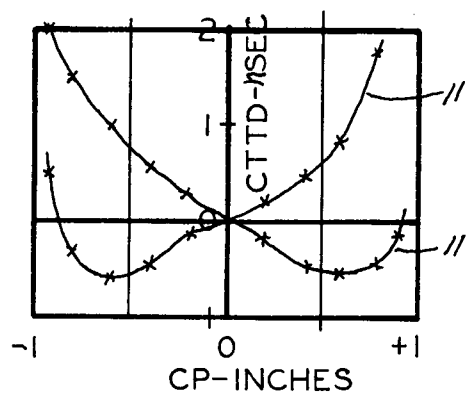

d) Fully-curved cathode. Examples of extremes of CTTD curves.

Symbols:

CTTD - Cathode transit-time difference.
CP - Cathode position, inches from center of cathode.
⊥ - On a cathode diameter perpendicular to dynodes.
// - On a cathode diameter parallel to dynodes.

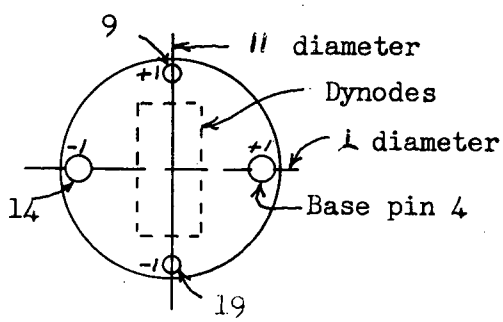

Cathode end view of tube: Relation of // and ⊥ diameters to base pins.

Fig. 2 - CTTD curves for the various cathode shapes.

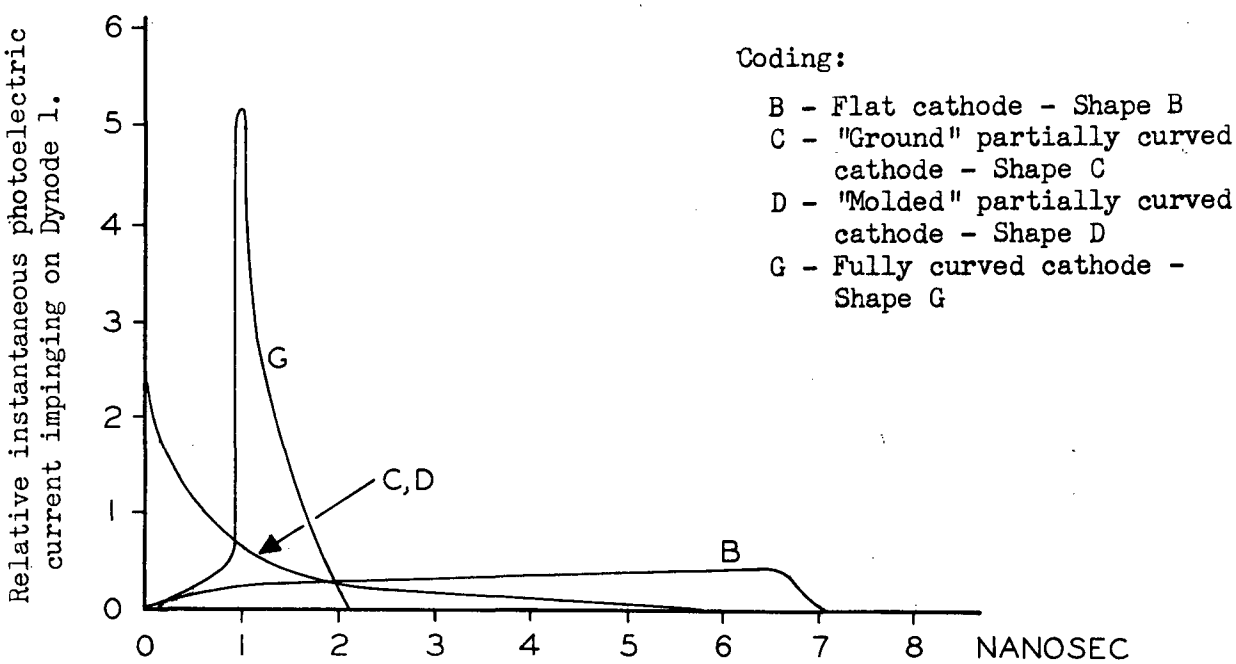

Fig. 3

Time after first photoelectron reaches Dynode 1, cathode having been uniformly illuminated by impulse of light.

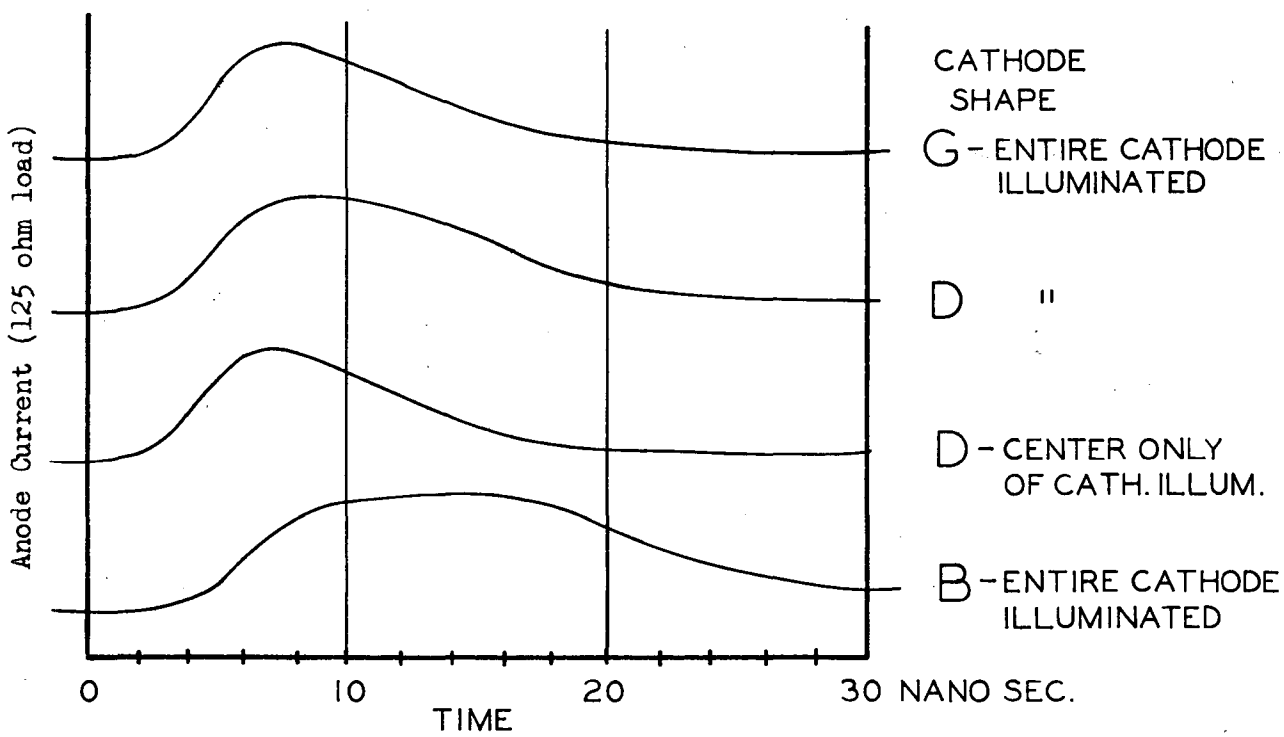

Fig. 4

Response to mercury light-pulser of tubes having the cathode shapes indicated.

IV. CATHODE TRANSIT TIME DIFFERENCE (Continued)

The curves in Fig. 3 show the response of the cathode-dynode 1 systems of the 6810-class phototubes to an impulse (delta function) of light. These curves are derived from the CTTD curves of Fig. 2 using the assumptions that the cathode sensitivities and photoelectron collection efficiencies are uniform over the cathodes. If the input pulses were reduced in amplitude to the point where single photoelectrons were emitted from the cathode, the curves of Fig. 3 indicate the "time jitter" that may be expected in the delay between the light pulse and the anode output pulse.

The shapes of the anode pulses are modified from those of Fig. 3 by the multiplier transit-time spread. Fig. 4 shows anode pulses from tubes having these cathode shapes and illuminated by light pulses from a mercury-capsule light pulser. The light pulses rise and fall to 20% amplitude in about 1.5 nanosec, followed by a gradual decay, and thus roughly approximate an impulse compared to the response time of the tubes. Recent work with the mercury capsule light pulser has shown that light flashes as narrow as 300 picosec. can be realized by using low voltage on the mercury capsule.[1]

V. FOCUSING ELECTRODE

The focusing electrode (G1) and cathode (including the aluminized coating) form an electrostatic lens whose purpose is to focus photoelectrons onto dynode 1. The cross-sectional drawings of Fig. 1 show the physical relation of these parts. The potential of the focusing electrode affects not only the focusing of photoelectrons from the cathode onto dynode 1, but also the focusing of secondary electrons from dynode 1 onto dynode 2. The optimum operating voltage for the focusing electrode therefore depends upon both the voltage between cathode and dynode 1 (V_{K-D1}) and between dynode 1 and dynode 2 (V_{D1-D2}). All figures quoted herein are based upon a voltage distribution of $V_{K-D1} = 2 \times V_{D1-D2}$, see Section VII.

The variation of anode sensitivity with the ratio of V_{K-FE}/V_{K-D1} is shown in Fig. 4A, for two typical tubes. These curves are for the entire cathode illuminated. The value of this ratio giving the maximum anode sensitivity is called the optimum ratio, and varies from tube to tube. The statistical distribution of the optimum ratios for a sample of 200 tubes is shown in Fig. 4B. The optimums range from 0.7 to 0.9.[2] Most tubes give > 80% of the maximum anode sensitivity when operated at V_{K-FE}/V_{K-D1} of 0.8, but to obtain best performance from the tubes it is necessary to adjust the voltage dividers individually. Values of optimum ratio are marked on the tube base[3] or are available from the Physics Technical Support Group.

Type C7251 has an additional electrode, the "focus ring", mounted above the focus electrode, Fig. 1. In all but some of the earliest serial numbered tubes (made before 12/57) received to date, the focus ring is internally tied to the cathode.

Magnetic fields as low as one gauss may affect the optimum operating voltage for the focusing electrode; therefore all such determinations should be carried out after degaussing and with a magnetic shield in place.

1. M. Birk, Q. A. Kerns, & R. F. Tusting, "Evaluation of the C-70045H High Speed Photomultiplier", UCRL-11147 (Feb. 19, 1964)
2. Note disagreement with RCA data sheets.
3. Refer to CC 8-3A.

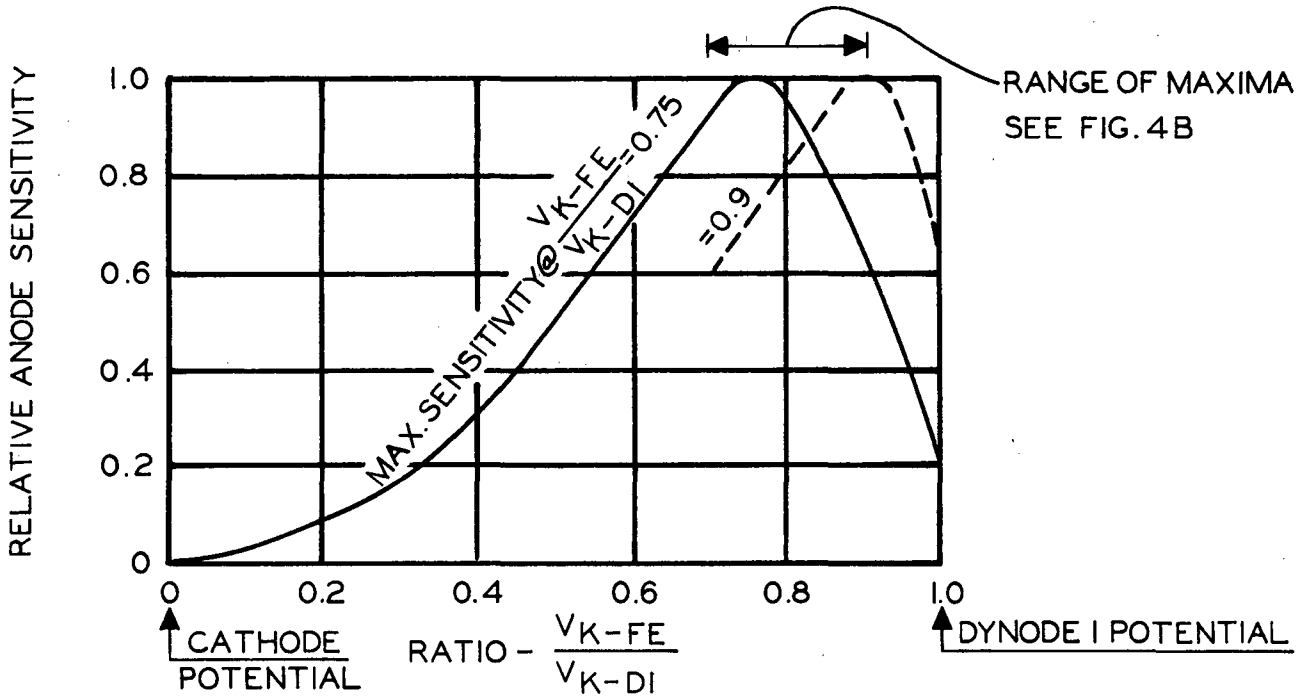

Fig. 4A

The variation of anode sensitivity with focus-electrode (G1) voltage with entire cathode illuminated.

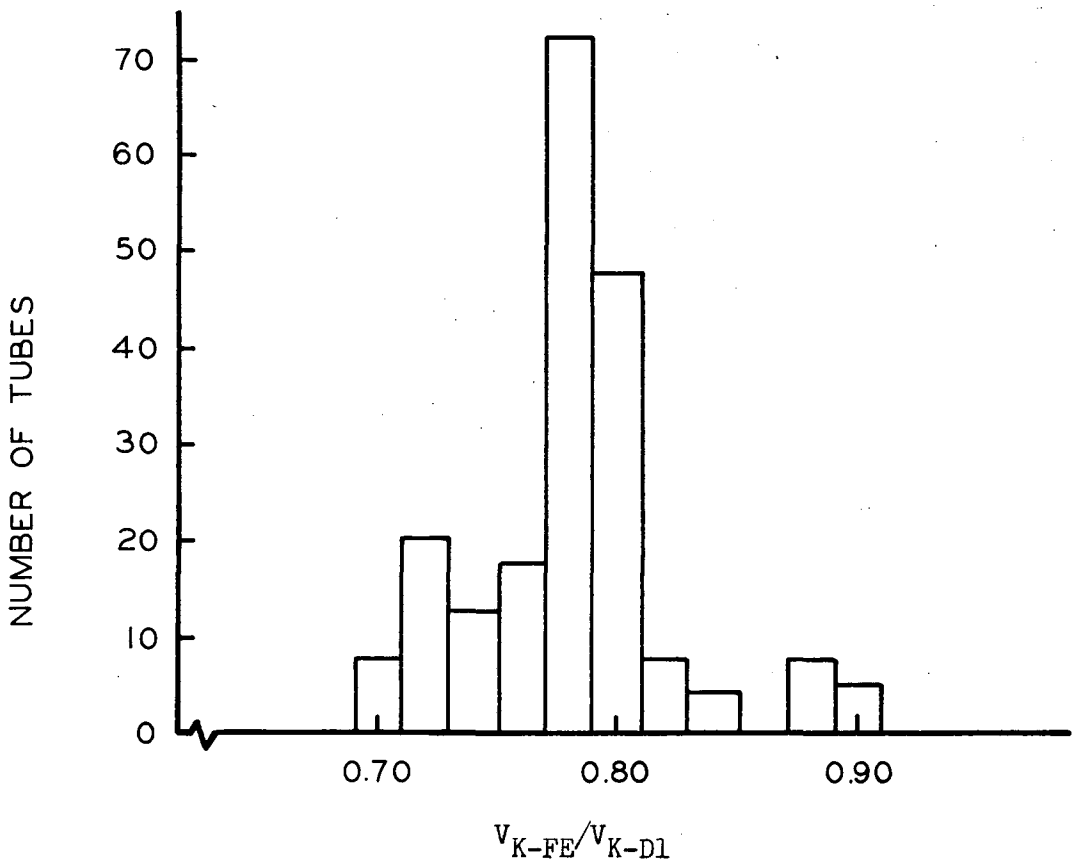

Fig. 4B

Distribution of optimum ratios of V_{K-FE}/V_{K-D1} for 200 6810A tubes (1962-63)

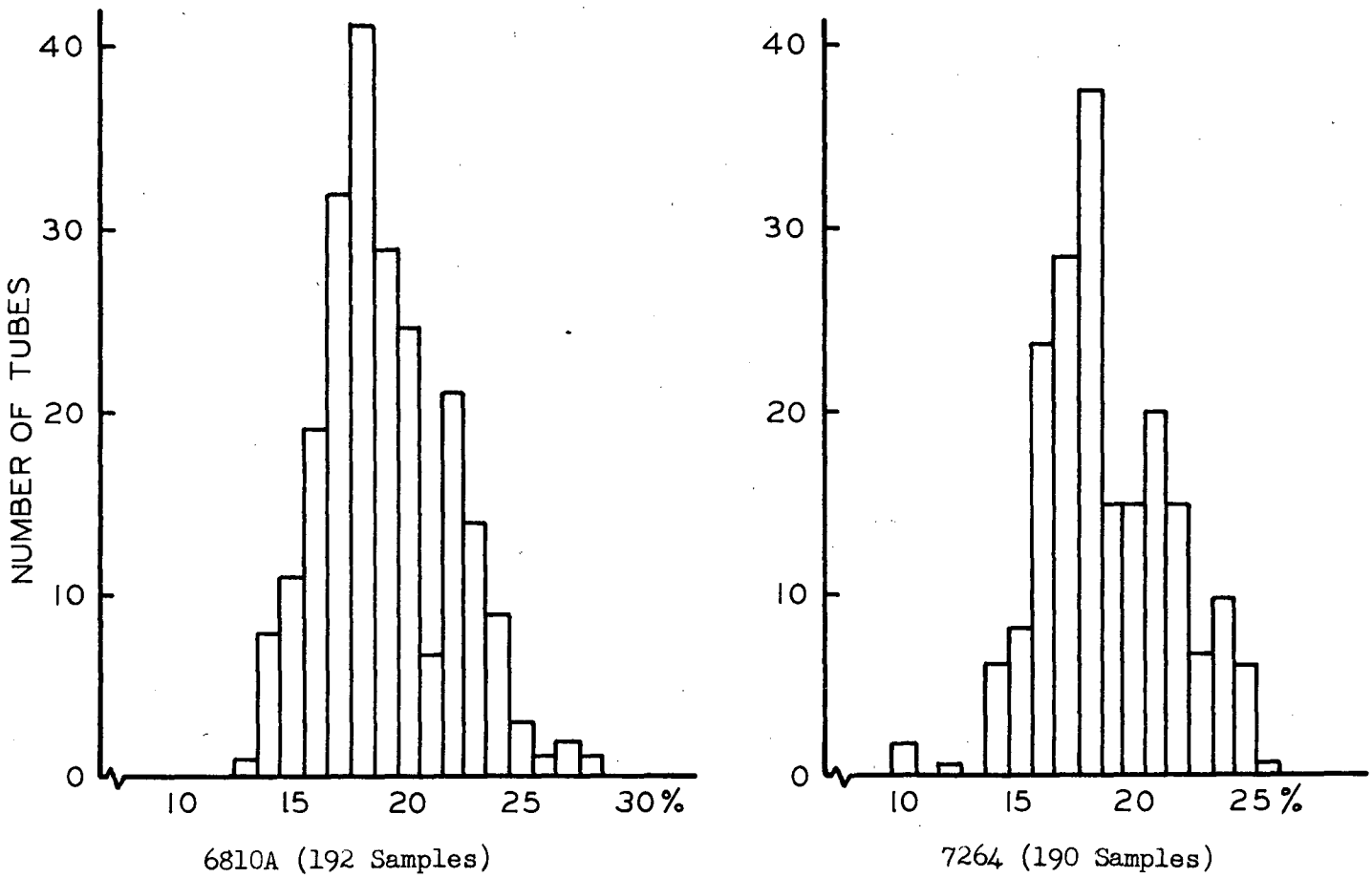

Fig. 5 - Cathode Quantum Efficiency

VI. CATHODE SENSITIVITIES

Fig. 5 shows the distribution of cathode quantum efficiencies measured by Physics Technical Support Group on tubes received at UCRL in the year ending 12/63. The quantum efficiency is measured with radiation centered about 4200 Angstroms. It is the ratio of the number of photoelectrons emitted to the number of photons incident on the cathode. Cathode sensitivity and quantum efficiency are related by: Cathode sensitivity (μA/μWatt) x photon energy (electron volts) x 100 = quantum efficiency (per cent). Photons of 4200 Angstrom wavelength have an energy of 2.95 e.v.

VII. VOLTAGE DIVIDERS

Voltage ratios and typical resistor values for three voltage dividers are given in Table I. Of the three dividers, X1 gives the highest current gain for a given tube voltage, X6 the lowest. Divider X6 gives the highest saturated output current, X1 the lowest. (See Section VIII, X.)

Aside from the cathode-dynode 1 voltage: in divider X1, all interdynode voltages are equal; in X2, higher voltages are applied to the last few stages, with the highest being twice (X2) the dynode 1 - dynode 2 voltage; in X6, the highest interdynode voltage is six times (X6) the dynode 1 - dynode 2 voltage.

TABLE I

Voltage divider ratios for use with 6810-class tubes. Except for focus electrodes,(2) these ratios are as given in RCA literature.

BETWEEN ELECTRODES (↓)		Apply →	DIVIDER X1	DIVIDER X2	DIVIDER X6
C7232	6810A, C7187 7264, C7251 CL1090	Base Pins	6810-6.25% of supply voltage mult. by: C7232-5.55% of supply voltage mult. by: (Typical Resistor)[1]	6810-5.4% of supply voltage mult. by: C7232-4.88% of supply voltage mult. by: (Typical Resistor)[1]	6810-2.75% of supply voltage mult. by: C7232-2.6% of supply voltage mult. by: (Typical Resistor)[1]
K -D1(2)	K -D1(2)	20-2 (20-1)(4)	2(2) (300K)	2(2) (300K)	2(2) (150K)
D1 -D2	--	1-18(4)	1 (150K)	1 (150K)	1 (75K)
D2 -D3	--	18-2(4)	1 "	1	1 "
D3 -D4	D1 -D2	2-17	1 "	1	1 "
D4 -D5	D2 -D3	17-3	1 "	1	1 "
D5 -D6	D3 -D4	3-16	1 "	1	1 "
D6 -D7	D4 -D5	16-4	1 "	1	1 "
D7 -D8	D5 -D6	4-15	1 "	1	1 "
D8 -D9	D6 -D7	15-5	1 "	1	1.2 (91K)
D9 -D10	D7 -D8	5-14	1 "	1	1.5 (120K)
D10-D11	D8 -D9	14-6	1 "	1	1.9 (150K)
D11-D12	D9 -D10	6-13	1 "	1	2.4 (180K)
D12-D13	D10-D11	13-7	1 "	1	3.0 (240K)
D13-D14	D11-D12	7-12	1 "	1.25 (180K)	3.8 (300K)
D14-D15	D12-D13	12-8	1 "	1.50 (220K)	4.8 (360K)
D15-D16	D13-D14	8-11	1 "	1.75 (270K)	6.0 (470K)
D16-A(3)	D14-A(3)	11-9	1 "	2.0 (300K)	4.8 (360K)
	TOTAL	6810	16 (2.40 Meg.)	18.5 (2.77 Meg.)	36.4 (2.80 Meg.)
		C7232	18 (2.70 Meg.)	20.5 (3.07 Meg.)	38.4 (2.95 Meg.)

(1) Typical resistor values match voltage ratios as closely as manufactured resistor values permit. Total resistance chosen to give about 1 mA divider current at usual operating voltages.

(2) Focus electrode (G1) potential to be between that of cathode and dynode 1 see Section V.

(3) Accelerating electrode (G2) normally connected to dynode 14. CL1090's have no accelerating electrode.

(4) C7232 only. Resistors may be connected to base pins indicated, but actual K and G1 connections are made on external rings. To use a C7232 divider with a 6810, place a short between socket pins 1 and 2.

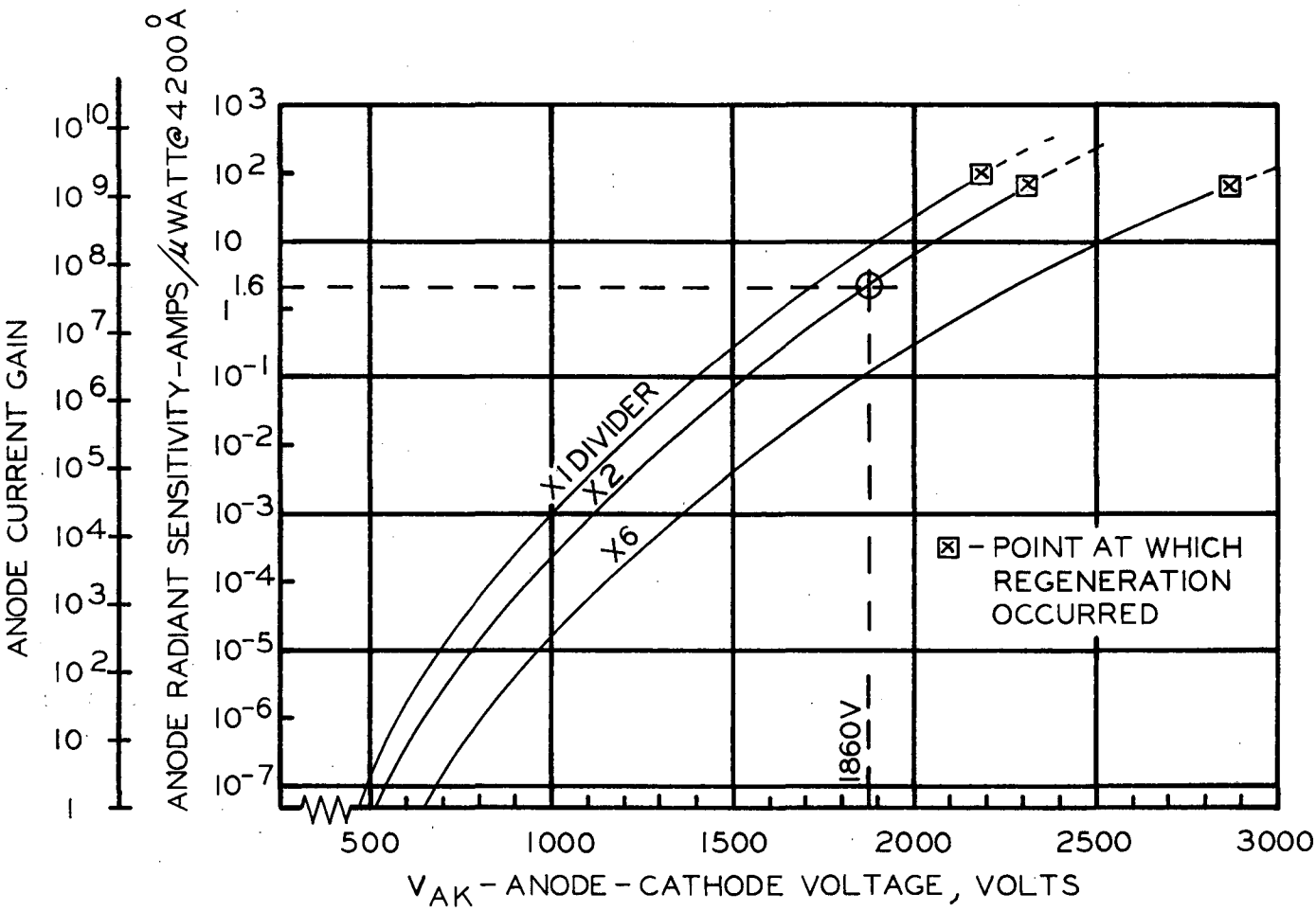

Fig. 6
Anode current gain and sensitivity of a typical 14 stage 6810-class tube. This tube has a "standard sensitivity" of 1.6 a/μW at 1860 volts and would therefore have "1860" marked on the tag attached to it by Physics Technical Support Group, see CC 8-3)

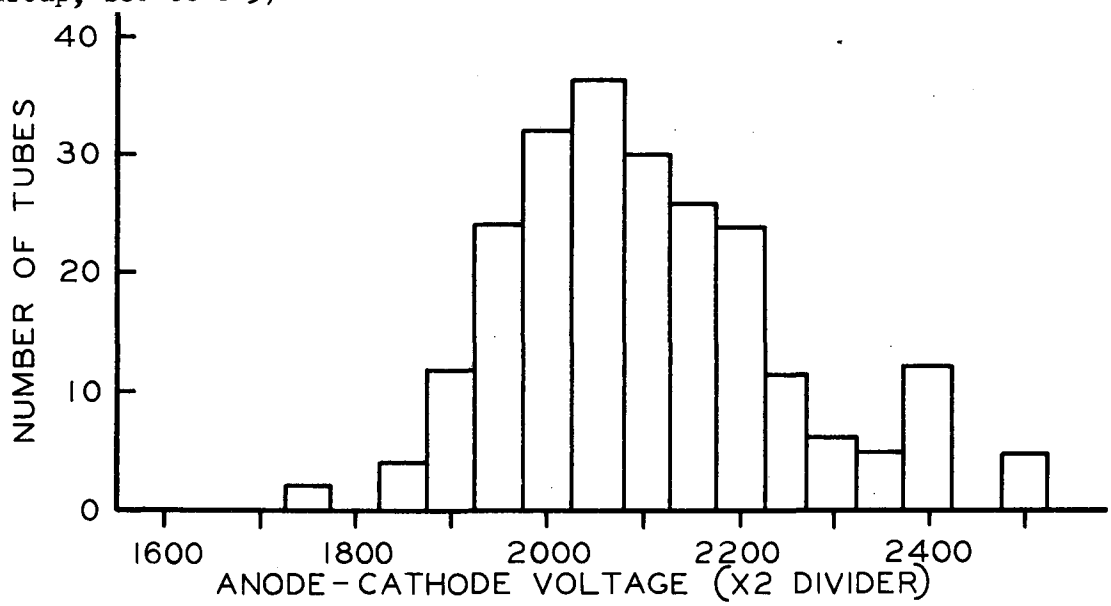

Fig. 7
Distribution of anode-cathode voltages required to obtain "standard sensitivity" of 1.6 a/μW in 228 6810's received in 1962 - 1963.

VIII. ANODE CURRENT GAIN AND SENSITIVITY

In Fig. 6 are curves of anode sensitivity and current gain for a typical 14-stage tube of the 6810 class. For a given divider, the maximum operating voltage of such a tube is usually determined by light feedback; thus, as shown, the maximum gains obtained with the three dividers are about the same. This maximum gain varies less than an order of magnitude from tube to tube.

The voltage at which the sensitivity of 1.6 amps/μwatt @ 4200 Å (2000 amps/lumen or gain of $\sim 3 \times 10^7$) is obtained with an X2 divider is marked on the tube base by Physics Technical Support Group (see CC 8-3 for code). The statistical distribution of such voltages on recent 6810A tubes is shown in Fig. 7. Near this voltage, the gain and anode sensitivity change about an order of magnitude per 300 volts.

When space-charge saturation effects, see Section IX, are absent, the dynode-14 gain (dynode 16 in C7232) is the anode gain times (S-1)/S, where S is the secondary emission ratio of dynode-14. S depends on the voltage and is typically of the order of 3.5 at a sensitivity of 1.6 a/μW.

For several reasons, the "local" anode sensitivity measured by illuminating small parts of the cathode is a function of the area illuminated. Typically, these, local variations amount to $\pm$ 20% of the mean sensitivity, except that the cathode area opposite base pin 4 usually has much lower sensitivity than the mean. This latter effect is apparently associated with the portion of dynode-1 at which photoelectrons from this area strike.

Fig. 8 gives gain and sensitivity curves for a C7232A. The maximum usable gains have been found to range from 4×10^9 to 5×10^{10} in a sample of 5 tubes.

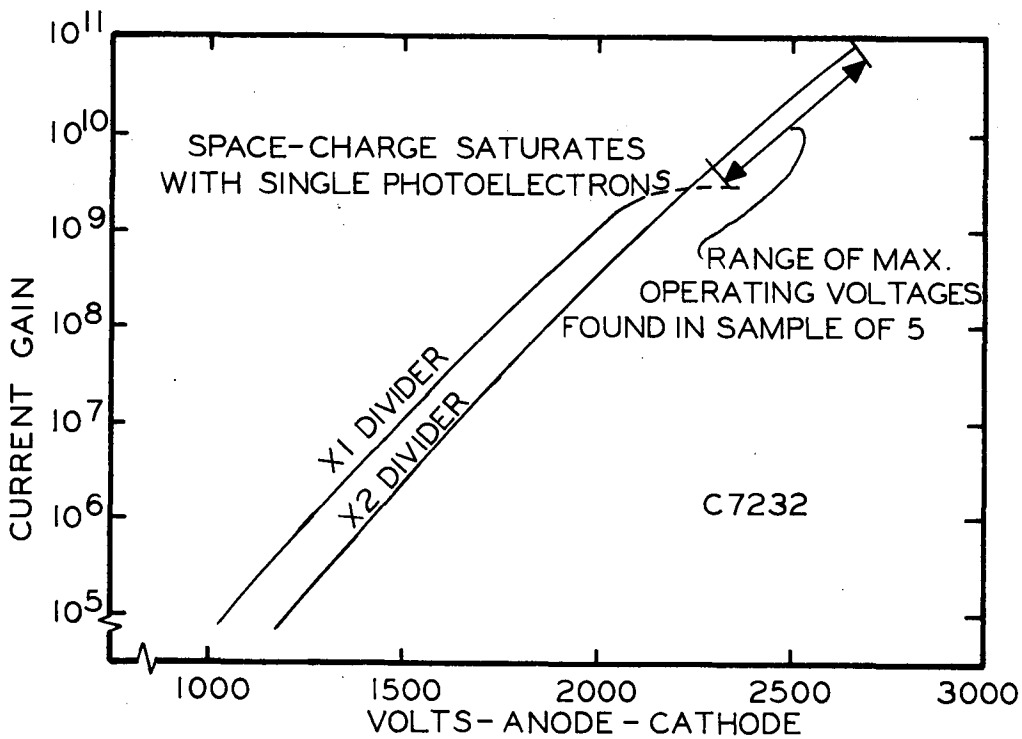

Fig. 8 - Gain-voltage curves of C7232.

IX. TRANSIT-TIME

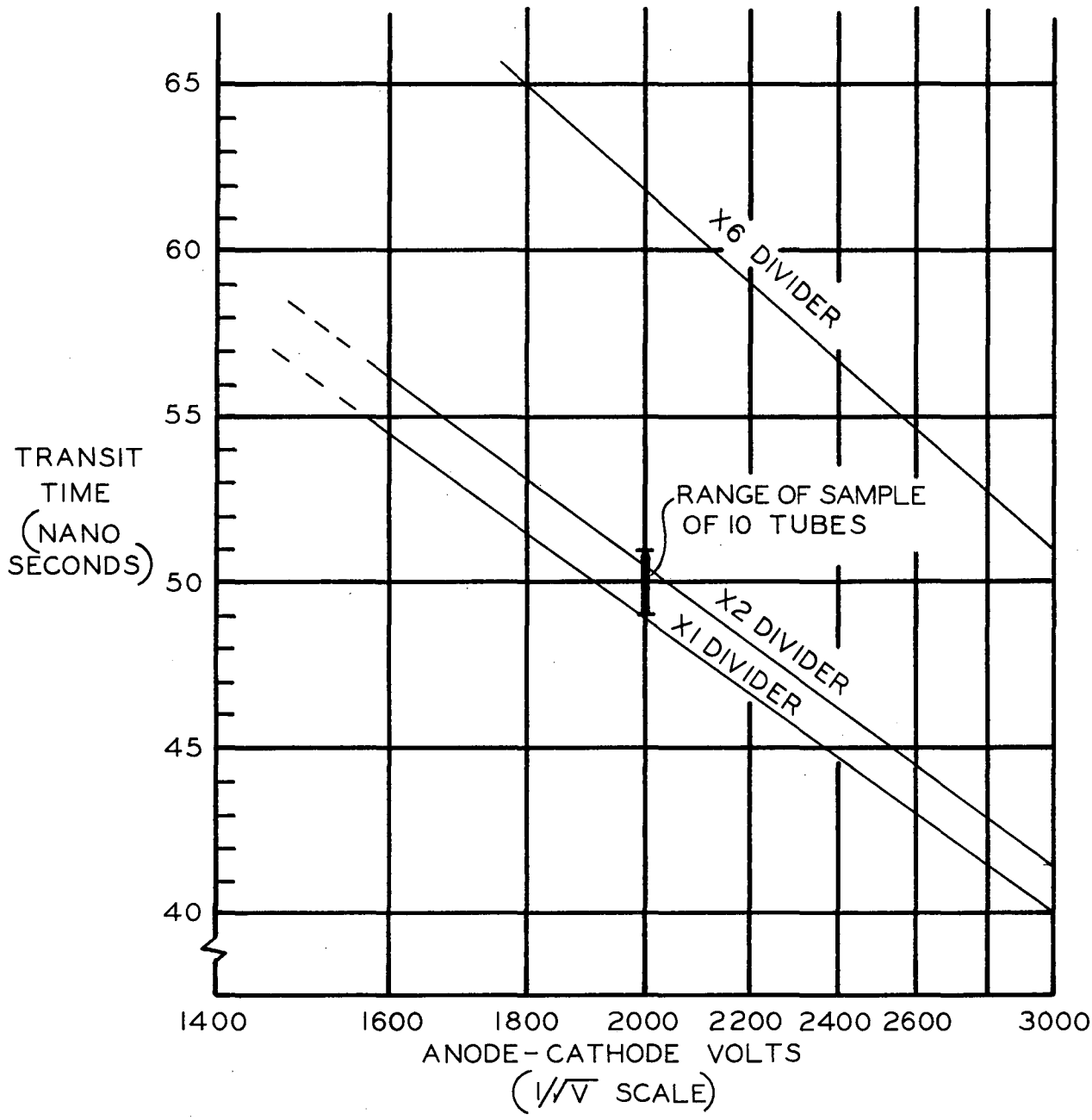

Fig. 9 - Transit-time vs. voltage for 14-stage tubes.

The transit-time plotted above is the measured time interval between an impulse of light striking the photocathode and the 50% of maximum-amplitude point on the rise of the corresponding output pulse. For a given divider, transit-time varies inversely as the square-root of anode-cathode voltage. A single set of curves is given as being idicative of the transit-time characteristics of the 14-stage types. A sample of 10 - 6810A tubes measured with an X2 divider at 2000 volts fell within the range indicated.

For these measurements, the focus electrode (G1) voltage ratio V_{K-FE}/V_{K-D1} was 0.75, and the accelerating electrode (G2) was connected to D14.

X. SATURATED OUTPUT CURRENT

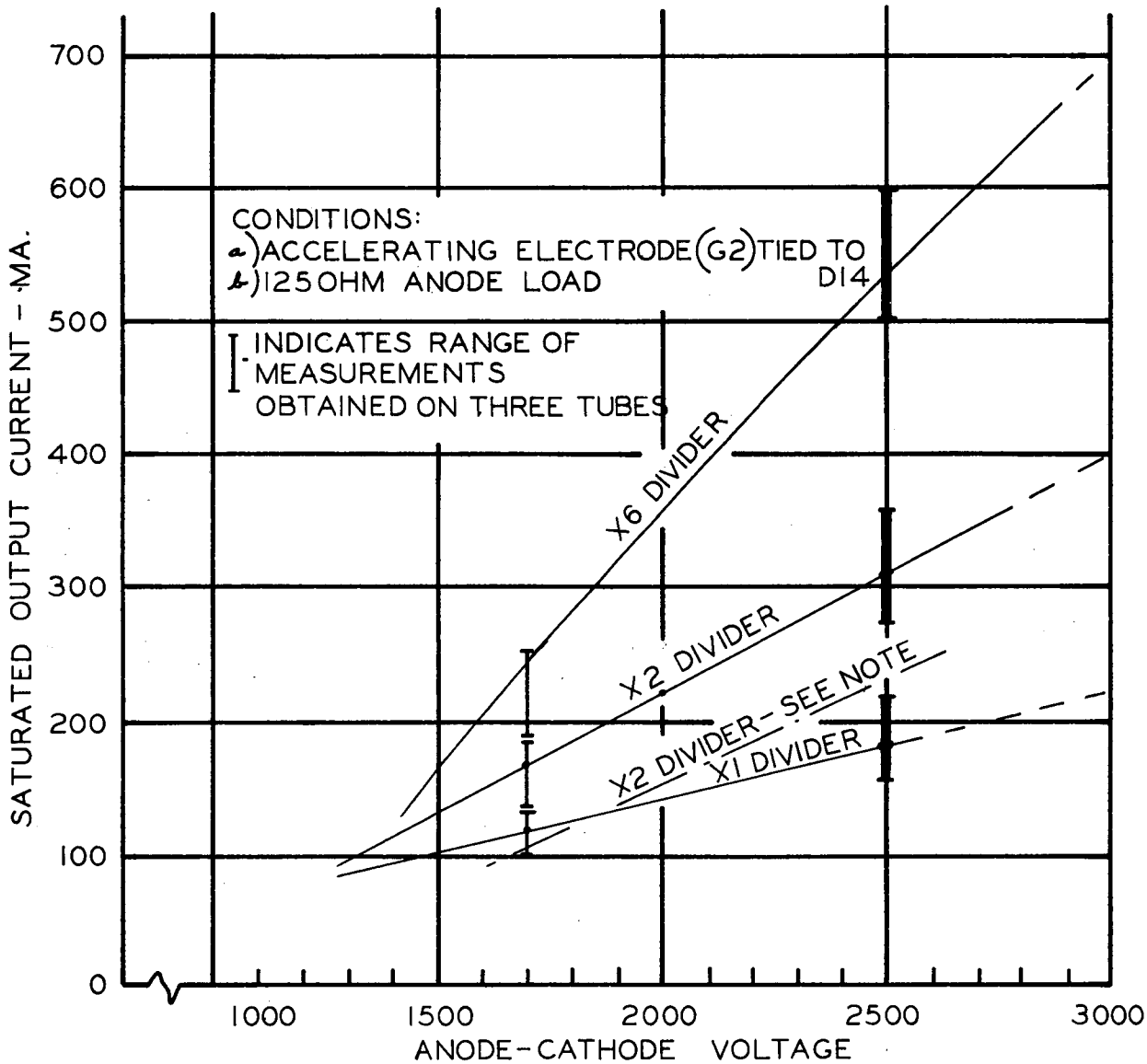

Fig. 10 - Saturated output current vs. voltage for 14-stage tubes.

The maximum anode current that can flow during a pulse is limited by space-charge saturation of some pair of electrodes. The maximum allowable dc anode current is fixed by dissipation limitations to two milliamperes, whereas in normal operation, saturation occurs at currents above 50 mA. Therefore, space-charge saturation occurs only during the current pulses, being manifested as a flattening of the peaks of the pulses as well as increased width and decay time not present in the light flash. This effect is sometimes advantageously used for amplitude limiting.

Saturation normally occurs in the latter stages of the multiplier where currents are the highest. Voltage dividers X2 and X6, see Section VII, are proportioned to place higher voltages on the latter stages.

The current at which saturation takes place depends on the geometry of the electrodes in question and is proportional to the three-halves power of the voltage between them. With the dividers listed, saturation occurs first in a stage ahead of dynode 14. Therefore the saturated output current does not vary as the three-halves power of the anode-cathode voltage since the saturation is followed by one or more stages having voltage dependent gain.

One may choose to define saturation as occurring at the current for which there is an appreciable widening in the output pulse. This method is described in EE-795 and is there defined as the current at which there is a 25% increase in pulse width at the half-height.

Note: Some tubes have an altered D14-anode configuration which saturates at a lower value of current as indicated by the dashed curve for the X2 divider above. This new configuration has been built into some tubes made after April, 1958, bearing serial numbers starting with 4.8.XXXX. These tubes may be identified by a vacant hole in the side support insulator at the old anode position.

XI. MAXIMUM OPERATING VOLTAGE

The maximum operating voltage is the maximum voltage that may be applied to a tube without causing harmful effects either to the tube or to the operation of the following circuits. As the voltage is increased, the anode dark current (amplified cathode dark current) likewise increases; in tubes where regenerative effects are present, at some voltage the dark current will suddenly increase to the limit determined by the divider. If the divider allows the anode current to exceed one milliampere, excessive power dissipation within the tube may degrade certain of its properties. Even if the divider limits the current to a lower value, the interelectrode currents flowing in the divider cause a redistribution of voltages which usually lowers the tube gain and the saturated output current.

Experimental evidence indicates that, in most 6810's light feedback* within the tube determines the maximum gain that may be attained. Refer to Fig. 6 where it is seen that the maximum gain available from the particular tube shown is very nearly the same regardless of the divider used. Thus, low-gain tubes will, in general, have higher maximum operating voltages than high-gain tubes.

The use of reflecting materials (aluminum foil, etc) next to the glass envelope of the tube may enhance the light feedback, lowering the maximum attainable gain and tending to increase the noise. Electrostatic shielding should be constructed in a way that does not provide a path for light to be transmitted from the anode to the cathode.

The maximum operating voltage is measured for each tube and is marked on the round sticker on the tube base by Counting Maintenance, see CC 8-3.

*Approximately 50 nanoseconds (one transit-time) after a light pulse strikes the cathode, a pulse of electrons reaches the last few dynodes. Light is produced by these inter-dynode electrons. Some of the light leaks back to the cathode resulting in afterpulses at multiples of one transit-time after the original pulse. When the gain is increased to the point that the first such afterpulse is greater than the original pulse, a regenerative condition is reached.

XII. MISCELLANEOUS

1. Magnetization

Certain parts of the tubes (e.g. the focus electrode and the sealing ring at the base end) may become permanently magnetized upon exposure to a strong enough magnetic field. Tubes known to have been exposed to a 100 gauss field in the Bevatron building have been found to give 1/10 their normal gain at a given voltage. The minimum field required to cause magnetization has not been measured. Normal operation is recovered upon being demagnetized; no permanent after effects have been noted.

It is recommended that tubes be mounted in their magnetic shields before being carried into locations where magnetic fields greater than the order of ten gauss are to be encountered.

2. Sources of Excess Noise Within the Tube (cf. Section XI - light feedback).

A common source of tube failure has been found to be the "glowing filament". It consists of a small whisker or filament of semi-conducting material which may become lodged between two electrodes, thereby shorting the associated voltage divider resistors. The whiskers usually glow visibly at currents of the magnitude flowing in voltage dividers. The symptoms of a tube with a glowing filament, therefore, are: reduced gain, owing to the shorted electrodes; a higher cathode dark current, owing to the light produced by the filament.

Methods of evaporating the filament and returning the tube to its normal condition are covered in Engineering Note EE-521, or refer to Physics Instrumentation Research Group, Bldg. 80, Room 13.

Discharges may occur between various electrodes in certain tubes because of sharp points, rough surfaces, etc. When present, such discharges often increase the dark current (noise) by several times. In cases where these sources can be located (e.g. visually), they may often be burned off by establishing the glow with a current of a few μA, then discharging a suitable pulse of electrical energy ~ 5 millijoules through the discharge.

The excess noise which is produced by effects other than cathode thermionic emission often is not materially reduced by lowering the temperature of the tube.

CK:mt

Lawrence Radiation Laboratory
University of California, Berkeley

File No. CC 8-5A (1)
June 30, 1966
J.B. Czirr

COUNTING NOTE

PARTICLE DETECTION BY SCINTILLATION COUNTERS

ABSTRACT: This note is concerned with the components most commonly used in scintillation counters at the Lawrence Radiation Laboratory, Berkeley. Only two phototubes, the RCA 6810-A and RCA 7046 and one scintillator, UCRL polystyrene-terphenyl plastic, are considered in detail. Table I lists references to other components and data from other sources. The designation A refers to information found in this counting note.

Section I. Introduction

TABLE I. References to Photomultipliers, Scintillators and Light Pipes

Photomultipliers	Quantum Efficiency	Collection Efficiency	DC Gain	Pulse Gain	Electrical Characteristics
RCA 6810-A	Ref 1	A*	Ref 2	A	Counting Note CC8-2B
RCA 7046	"	A	"	A	"
RCA 7746	"	–	"	–	"
RCA 7850	"	–	"	–	"
DuMont 6292	"	A	"	–	"
DuMont 6364	"	A	"	–	"
CBS 7819	"	A	"	–	"
Radio Technique 58AVP	"	A	"	–	"
Radio Technique 56AVP	"	–	"	–	"

Scintillators	Scintillation Efficiency	Emission Spectrum	Light Transmission	Other
UCRL Plastic	A, Ref 3	A	A	Ref 3
Pilot B Plastic	–	A	Ref 4	–
Ne 102 Plastic	.62 X Anthracene	4300 Å	–	–
Ne 213 Liquid	.78 X Anthracene	4300 Å	–	–
NaI (T1)	Ref 3	Ref 9	–	Ref 3
Anthracene	Ref 3	Ref 5	–	Ref 3
Stilbene	Ref 3	Ref 5	–	Ref 3
Noble gases	Ref 6	–	–	Ref 6

Light Pipe	Light Transmission	Scintillation Efficiency
Lucite	A, Ref 7	Ref 8
Alzak	A	–

* Refers to subjects discussed in this note.

[1] The quantum efficiency of the total cathode area of individual tubes is measured by the Counting Research group, as described in Section CC8-3 (3).

[2] The DC gain of individual tubes is set at a standard value by the Counting Research group, as described in Section CC8-3.

[3] R.K. Swank, Annual Rev Nuc Science, 4, p 111. (1954)

[4] R.J. Potter, Rev Scientific Instr 32, 286 (1961).

The following general relation may be used to arrive at an estimate of the signal magnitude to be expected from a given event. It should be noted in applying this relation that there are, at present, 20% uncertainties in some of the measured quantities which place a limit on the precision of the result. It is for this reason that the approximations used below are admissable.

Let

$$\bar{N}(\varepsilon_o, m) = \int dx d\vec{r} \cdot d\varepsilon \cdot d\lambda\, A(\varepsilon, m, \lambda) \cdot B(\lambda) \cdot C(\vec{r}, \lambda) \cdot D(\vec{r}, \lambda) \cdot E(x) \cdot F$$

= average number of electrons at anode per incoming particle of energy ε_o and mass m.

Where

A = number of photons detectable by the phototube/MeV lost/unit wavelength (for scintillator in use).
B = fraction of photons striking cathode (for scintillator and light pipe in use).
C = quantum efficiency at position $\vec{r}$ and wavelength λ (for tube in use) or number of electrons leaving per photon striking cathode.
D = collection efficiency at position $\vec{r}$ and wavelength λ from cathode to dynode 1 (for tube in use).
E = collection efficiency from dynode 1 to anode as a function of dynode positions x (for tube in use).
F = pulse gain of tube used $\equiv$ gain of the tube for those pulses which yield a detectable anode pulse.

Note: $D \cdot E \cdot F \equiv G$ = dc gain = $\frac{\text{anode current}}{\text{cathode current}}$

or

$\frac{G}{F}$ = DE = probability of successfully obtaining an anode pulse per photoelectron.

1. Let $A(\varepsilon, m, \lambda) \cong A'(\varepsilon, m) \cdot A''(\lambda)$. See Ref. 10 for evidence that the emission spectrum is independent of the type of exciting particle. $A'(\varepsilon, m)$ = number of photons/MeV lost (at all wavelengths detected by the photomultiplier).

   $1/A'(\epsilon, m_e) = 100 \pm 20$ ev/photon for all ε in plastic scintillator. or $A'(\varepsilon, m_e) = (1 \pm 0.2) \times 10^4$ photons/MeV. See Ref. 3 for anthracene, NaI, etc. ev/photon. See Ref. 6 for plastic scintillator to anthracene ratio. For $m \neq m_e$ see Ref. 11, or Section II.

---

[5] F. D. Brooks, Prog in Nuclear Phys, 5, p. 252 (1956).

[6] Methods of Experimental Phys, p. 127 (Academic Press), (1961).

[7] P. R. Bell and C.C. Harris, IRE NS-3, Transactions on Nuclear Science 4, p. 87 (1956).

[8] R. Madey and L. Leipuner, Nucleonics 14, p. 51 (April 1956).

[9] W. J. Van Sciver, Nucleonics 14, p. 50 (April 1956).

[10] W. L. Buck and R. K. Swank, Nucleonics 11, p 48 (Nov. 1953), W.S. Koski and C. O. Thomas, Phys Rev 79, p. 217.

[11] J. M. Fowler, C. E. Roos, Phys Rev 98, p. 996 (1955), C. J. Taylor, W. K. Jentschke, M. E. Remley, F. S. Eby, and P. G. Kruger, Phys Rev 84, p. 1034 (1951), M. Gettner and W. Selove, Rev. Sci. Instr. 31, 450 (1960).

$A''(\lambda)$ = fraction of photons at λ per unit wavelength. See Section III. (Also the net output curve of Ref. 12 can be divided by 1P21 phototube response to get scintillator output spectrum. This applies to Livermore scintillator only.) See Ref. 5 for other scintillators.

2. $B(\lambda)$. See Section IV and Ref. 7. For calculations of the fraction of light produced in a scintillator which strikes a photo-cathode see Ref. 14.

3. $C(2\pi \int_0^R r dr, 4400\ \mathring{A})$ for $R = R_{max}$ is given with each tube at Lawrence Radiation Laboratory. For other λ, the information is in the tube data sheet and Section V. Q. A. Kerns has measured $C(2\pi \int_0^R r dr, 4400\ \mathring{A})$ for a few tubes of several types for various $R < R_{max}$ (unpublished).

4. $D(2\pi \int_0^R r dr, 4400\ \mathring{A})$ for most tube types is contained in Ref. 13 in another form. What is really shown is $\frac{CDE\ (\text{type i})}{CDE\ (\text{Du Mont } 6292)}$ as a function of subtended area and at 4400 $\mathring{A}$. See Section VI for DE curves for several tube types. The authors of Ref. 13 state that C is constant enough in radius that the average C given may be used for all radii. They used a small central cathode area of a Du Mont 6292 as the closest thing to 100% photoelectron collection efficiency available. However, for this tube, D is probably less than 95% from statistics alone and could be even less. D could vary somewhat with λ -- how much is unknown.

5. $E(x)$. See 4 above. $\bar{E}(x)$ for the Du Mont 6292 may again be considerably less than 100%. We therefore have an upper limit on the absolute value of $D \cdot E$ (type i) from UCRL-9980.

   Note: Q. Kerns estimates that $D \cdot E$ is greater than 0.80 for the central region of the Du Mont 6292 used as a standard.

6. See Section VII for a technique used to experimentally determine the number of detected photoelectrons.

---

[12] L. Agnew, Transmission Properties of Lucite Samples in the Photo-Multiplier Response Region, Lawrence Radiation Laboratory Report, UCID 889.

[13] R. F. Tusting, Q. A. Kerns, H. K. Knudsen, Photomultiplier Single-Electron Statistics, Lawrence Radiation Laboratory Report, UCRL-9980.

[14] D. Brini, L. Peli, O. Rimondi, and T. Veronesi, Nuovo Cimento, II, Series X, N. 4, Supp., P 1048, (1955)

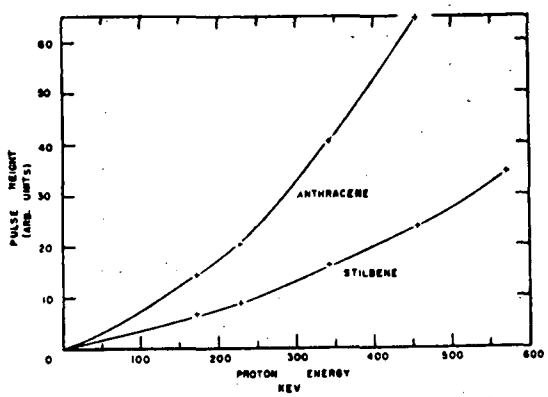

(a) Pulse heights from anthracene and stilbene as a function of proton energy.

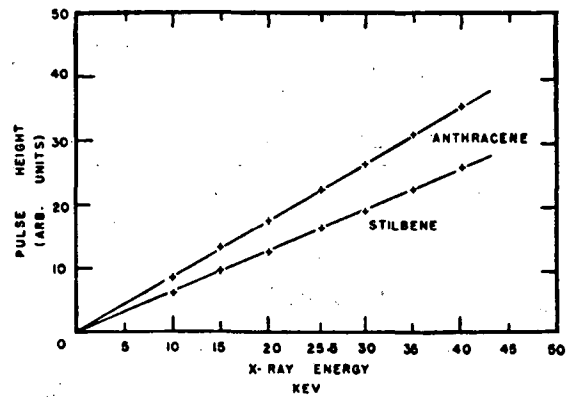

(b) Pulse heights from anthracene and stilbene as a function of x-ray energy.

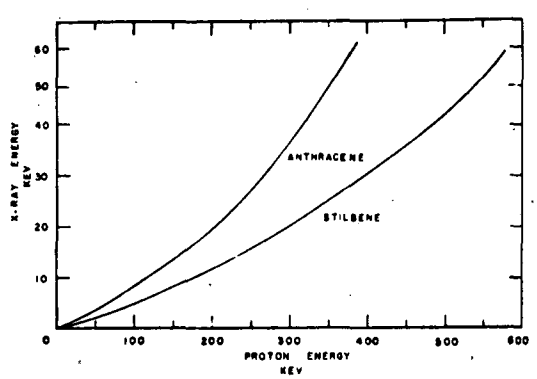

(c) X-ray energy versus proton energy for equal pulse heights.

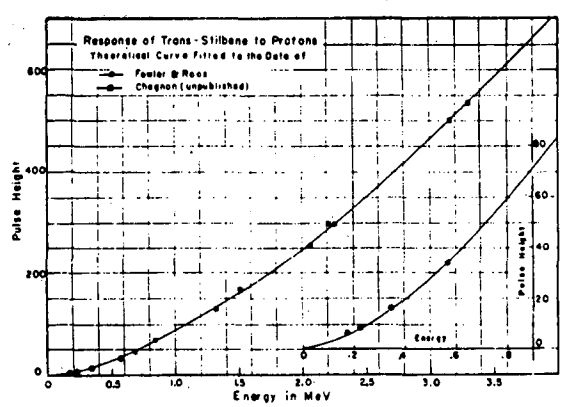

(d) Pulse heights versus proton energy for stilbene. Experimental data of Chagnon normalized to the curve at 3.3 MeV.

Figure 1. Pulse Height versus energy (From Fowler and Roos).

Section III. Scintillator Spectral Response

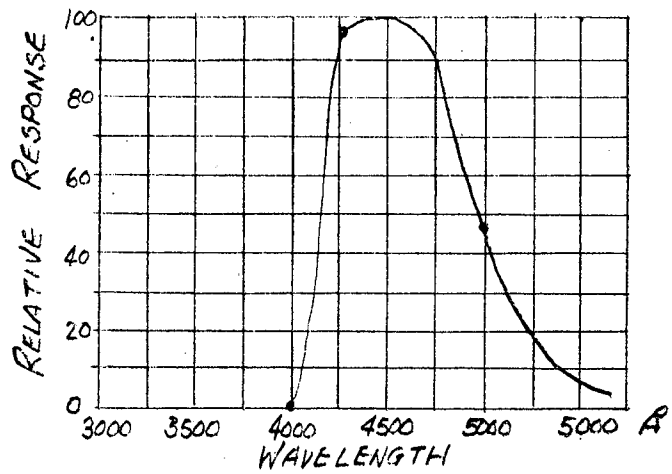

Figure 2. LRL Plastic Scintillator Response (From Ervin Woodward, LRL, Livermore). Scintillator Composition: Polystyrene (solvent) approximately 97.5%, p-terphenyl (activator) 2.5%, tetraphenylbutadiene (shifter) 0.03%, and zinc stearate (releasing agent) 0.01% - all proportions by weight. See Ref. 15.

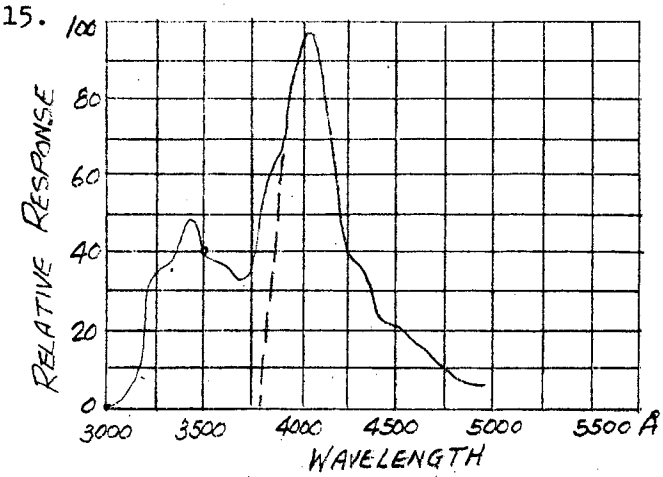

NOTE: For $\lambda > 3800$Å, the light is rapidly attenuated by transmission through the scintillator. The dashed curve shows the effective cut off for transmitted light.

Figure 3. Pilot Scintillator B Characteristics. Pulse Height: 90% of stilbene. Decay time: 2×10^{-9} sec. Color: Clear, exhibits a blue daylight fluorescence. Light Transmission: At peak fluorescence wavelength, transmission through a 1 foot length is 90%. Specific Gravity: 1.02. Composition: 100% hydrocarbon. Atomic Ratio: $\frac{H}{C}=1.10$. Softening Temperature: 70-75°C. Refractive Index: 1.58. Solubility: Insoluble in water and lower alcohols, soluble in numerous aromatic solvents. Information from Scintillation Grade Fluors, Pilot Plastic Scintillators, Pilot Chemicals, Inc., 36 Pleasant Street, Watertown, Massachusetts.

Section IV. Light Pipes

1. The transmission of various light pipes was measured within a dark box using a UCRL Mercury pulser light source. The data obtained are shown.

---

[15] L. F. Wouters, the UCRL Plastic Fluor, University of California, Lawrence Radiation Laboratory Report UCRL-4516, September 16, 1955.

in Figure 4.

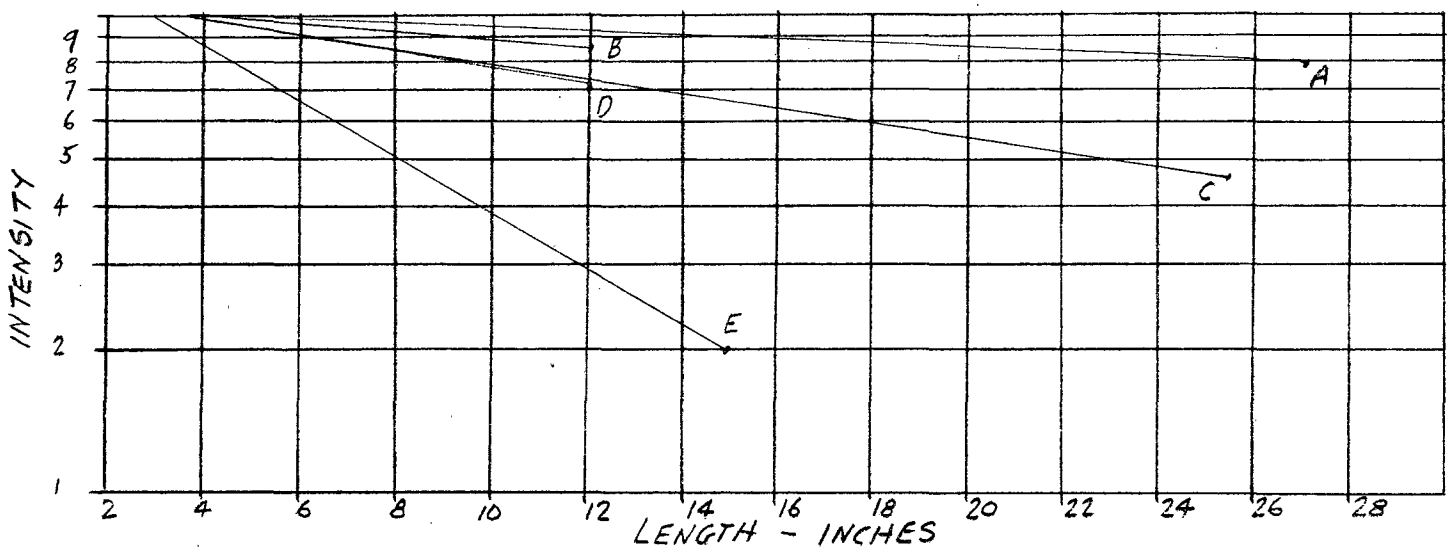

Figure 4. Relative Transmission Characteristics of Several Light Pipes

A - 1 5/16 inch diameter lucite - clear stock, λ = 102 ± 15 inches.
B - 1/2 inch diameter lucite - clear stock, λ = 55 inches.
C - 1 1/2 inch diameter plastic scintillator, λ = 29 inches.
D - 1/2 inch diameter lucite - yellow stock, λ = 28 inches.
E - 1 5/16 inch diameter Alzak - specular finish.

The light from the Hg pulser was passed through a 4200 ± Å filter and into a white box with an entrance and exit hole. The exit hole was shielded from the entrance hole by a reflecting baffle. The isotropy of the emerging light was checked by measuring the ratio of phototube PH (pulse height) with a 3 inch long by 1 1/2 inch diameter lucite light pipe out and in position. For isotropic light leaving the exit hole, the ratio is calculated to be approximately .04. The measured ratio was .08. The nonisotropy indicated by this measurement should have a negligible effect upon the measured attenuation coefficient for the light pipes.

2. The data obtained from the 1.3 inch diameter Alzak light pipe may be fitted with an equation of the form $I(L/d) = I(0)\ (R)^{kL/d}$ where R is the average reflectivity of the Alzak and kL/d is the average number of reflections in length L for diameter d. Now $(R)^{kL/d} = e^{k(\ln R)L/d}$ and from the data we obtain $k \ln R = -.18$ for $13 \geq L/d \geq 2.3$. It is not known whether the light starting down this light pipe was isotropic light throughout 2 π steridians or not, so that the curve shown probably represents an upper limit to the fraction of isotropic light which would be transmitted.

3. Curve A of Fig. 4 shows the transmission of blue light through a very clear sample of lucite rod. The data may be fitted with an equation of the form $I(L) = I(0)\ e^{-L/102''}$. The absorption length of 102 inches may be compared with a direct measurement of the same quantity by Duane Norgen of Lawrence Radiation Laboratory, Berkeley. He obtained λ = 133 inches using an unfiltered incandescent light source. The difference may be explained by the longer path length in the former case due to multiple reflections, plus any losses due to imperfect polishing of the rod surface. Curve B shows the effect of differences in diameter upon the transmission.

On the assumption that the true absorption coefficient is the same for curves A and B, then the greater losses for curbe B may be explained as due to imperfect internal reflectivity. Curve D was obtained from a very yellow sample of lucite and shows the possible variation from sample to sample.

4. The following auxiliary data were obtained (Ref. 16.)

TABLE II. Light Pipe Transmission Characteristics

A. Pulse Height	Condition
1.05	15 inch long light pipe optically sealed to phototube.
1.00	light pipe touching tube.
.95	light pipe separated from tube by 1/4 inch.
.89	light pipe separated from tube by 1/2 inch.
.74	light pipe separated from tube by 1 inch.
.50	light pipe separated from tube by 1 3/4 inch.

B.	Pulse Height		
light pipe length	1 inch	15 inch	30 inch
bare light pipe	1.00	.90	.70
tightly wrapped specular Al foil around pipe	1.00	.75	.70
light pipe wrapped in black tape	1.00	.20	.08

C. The reflectivity of various surfaces of evaporated and chemically deposited metals was measured at 5° incident angle using an unfiltered incandescent light source, and a Weston Phototronic barrier-layer photocell Model 594 as detector.

Reflector	Coating	Surface Preparation	Reflectivity
Silver	none	Evaporated	1.00 (by definition)
Silver	SiO	Evaporated	.985
Silver	Lacquer	Evaporated	.980
Silver	Glass	Evaporated	.993
Aluminum	none	Evaporated	.895
Aluminum	SiO	Evaporated	.895
Aluminum	Lacquer	Evaporated	.840
Aluminum	Glass	Evaporated	.862
Silver	Glass	Chemically deposited	.92
Aluminum	Alzak	Polished (specular)	.73

[16] R.L. Brown, LRL Berkeley, private communication.

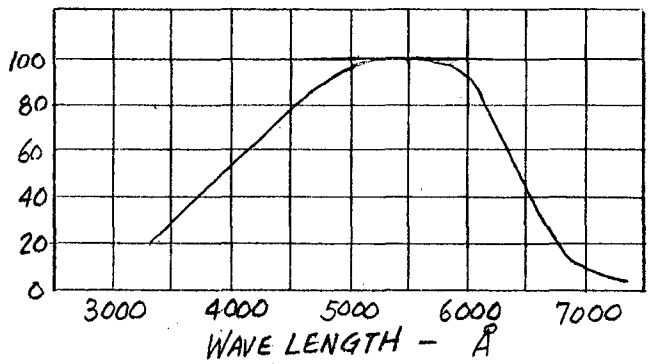

Figure 5. Spectral Sensitivity of Photronic Cells

Section V. Spectral Sensitivity Characteristics

Figures 6 and 7 give the spectral sensitivity characteristics for the types 6810-A and 7046 phototubes respectively. For other types see Counting Note CC8-2.

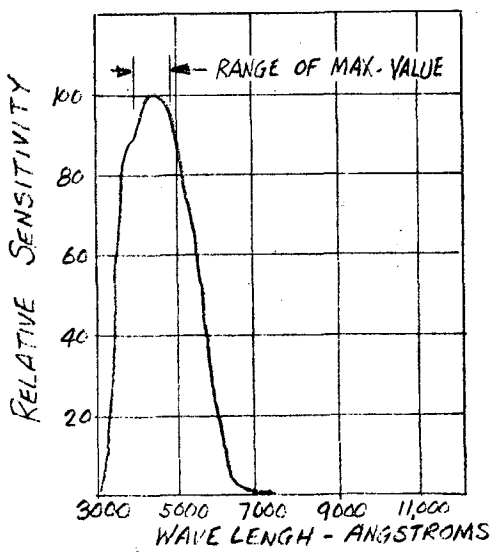

Figure 6. Spectral Sensitivity Characteristic Type 6810-A which has S-11 Response. Curve is shown for Equal Values of Radiant Power at All Wavelengths.

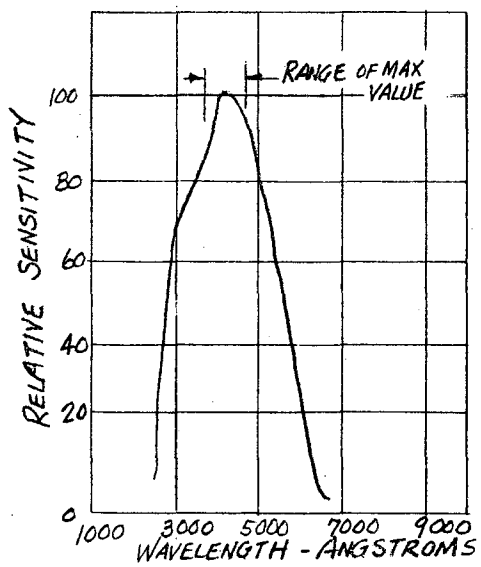

Figure 7. Tentative Spectral Sensitivity Characteristic of Type 7046. Curve is shown for Equal Values of Radiant Flux at All Wavelengths.

Section VI. Collection Efficiencies

Tusting, et al. show in Ref. 13 the collection efficiencies for several phototubes (see Figs. 8 and 9). Successive areas of the photocathode were exposed to pulse illumination. The counting rate is proportional to the product of the quantum efficiency, illuminated area, and overall collection efficiency; by knowing the quantum efficiency one can determine the relative collection efficiency; noise pulses have been subtracted.

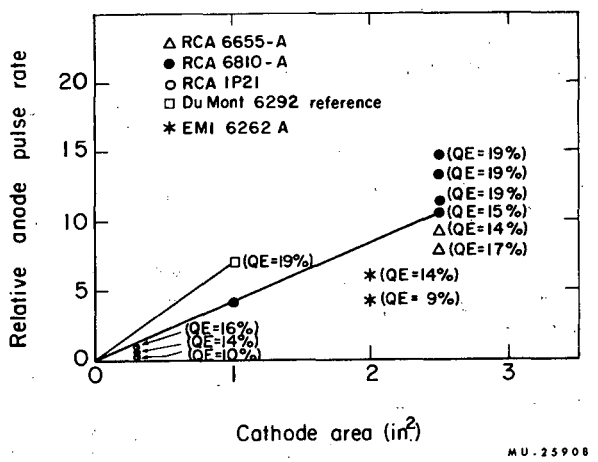

Figure 8. Relative single-electron pulse counting rate vs illuminated cathode area for 2 inch photomultipliers. An aperture is located between the photocathode and the low-intensity light pulser to adjust the illuminated cathode area. (Tusting, Kerns, and Knudsen)

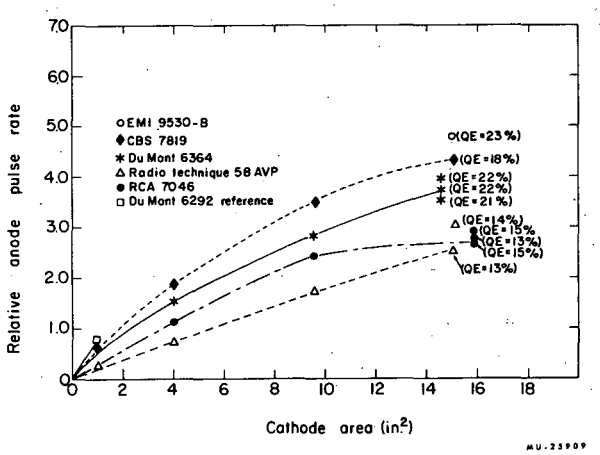

Figure 9. Relative single-electron pulse counting rate vs illuminated cathode area for 5 inch photomultipliers. An aperture is located between the photocathode and the low-intensity light pulser to adjust the illuminated cathode area. (Tusting, Kerns and Knudsen)

Section VII. Measurement of Number of Collected Photoelectrons

1. Derivation of expression

Let $N_p = N_\gamma \cdot C \cdot D \cdot E \cdot F$ = number of electrons in anode pulse, and Pulse Height (PH) = $k(N_p) \cdot N_p = k \cdot N_\gamma \cdot C \cdot D \cdot E \cdot F$, where N_γ is the number of photons striking the photocathode per pulse, k = arbitrary constant.

For single electron pulses: $N_{p_1} = F_1$ so $PH_1 = k_1 F_1$.

For multiple electron pulses: $N_\gamma C\ D\ E = N_e$ = number of electrons per pulse before multiplication.

So $PH_m = N_{em}\ k_m\ F_m$, where the subscript m refers to multiple electron pulses.

$$\text{Therefore, } N_{em} = \frac{PH_m}{PH_1} \cdot \frac{k_1}{k_m} \cdot \frac{F_1}{F_m}$$

2. RCA 7046 PM with X1 divider

At LRL, $D_m\ E_m\ F_m = D_s\ E_s\ F_s$ for all 7046's at the standard gain HV setting. If we approximate $D_m\ E_m$ by $D_m\ E_m = D_s\ E_s$ (to $\pm$ 10%) then $F_m = F_s = F_1$, where the subscript s <u>refers to a standard tube used at LRL</u>, and

$$N_{em} = \frac{PH_m}{PH_1} \cdot \frac{k_1}{k_m} \quad \text{where } PH_1 = .17 \text{ V, so}$$

$$N_{em} = 5.8\ PH_m\ \frac{k_1}{k_m} \quad (PH_m \text{ in volts}).$$

Note: $D_s\ E_s\ F_s = 3.0 \cdot 10^7$ for 7046's at LRL at the standard HV setting.

3. RCA 6810-A PM with X2 divider

At LRL, $C_m\ D_m\ E_m\ F_m = C_s\ D_s\ E_s\ F_s$ for all 6810's at the standard HV setting. If we assume that DE is a constant for all 6810-A's (to $\pm$ 10%) then $C_m\ F_m = C_s\ F_s$. For the tube used for the measurement of F_1 we let $D_1\ E_1\ F_1 = D_s\ E_s\ F_s$ so $F_1 = F_s$ and therefore, $C_m\ F_m = C_s\ F_1$ or $F_1/F_m = C_m/C_s$ where $C_s = 0.19$ for the standard

tube, so

$$N_{em} = \frac{PH_m}{PH_1} \cdot \frac{k_1}{k_m} \cdot \frac{C_m}{C_s} \cdot$$

Now $PH_1 = 0.076$ V, so

$$N_{em} = 69\ (PH_m) \cdot (C_m) \cdot \frac{k_1}{k_m} \cdot \quad (PH_m \text{ in V}, \ C_m \text{ in decimals})$$

4. Measurement of Pulse Height (PH).

Using the proper phototube divider, the anode signal (not back terminated) was fed through a short length of RG 63/U 125 Ω cable into a Tektronix B 170-A, 170 Ω scope attenuator in parallel with 470 Ω to ground. In both cases the phototube HV was set such that the quantity D • E • F (dc gain) was equal to 3.0×10^7. The Tektronix 517 A scope was calibrated on the 0.5 V (10 Ω) scale at 1/5 full scale using the 170 Ω signal cable directly from calibration output to signal input. The sensitivity with no attenuation was then 0.10 V/cm. Any further attenuation should be obtained from the 170 Ω attenuator box. The scope trigger was obtained from the Hg pulser light source used to obtain the single photoelectrons. The light repetition rate was 60 per second and the intensity was attenuated until only approximately 6 pulses per second were detected. In this condition only 1/20 of the pulses were due to 2 or more photoelectrons. The values given for PH_1 in section 2 and 3 have been corrected for multiple electron pulses. The factor of 2 difference from 6810 A to 7046 PH_1 is a reflection of the lower collection efficiency of the 7046. The assumption is made in this measuring technique that there is no contribution to many electron pulse heights from very small but numerous pulses which would have been invisible in the above method.

5. Measurement of k_1/k_m.

A rough determination of k_1/k_m was made under the assumption that the charge contained in an anode pulse is proportional to the product of PH and full width at half maximum. The values for the RCA 6810 A are:

PH	number of e	k_1/k_m
.076 V	1	1.00
2.82 V	37	1.46

and for the RCA 7046

PH	number of e	k_1/k_m
.173 V	1	1.00
3.6 V	21	1.27

COUNTING NOTE

ELECTRICAL GATING OF MULTIPLIER PHOTOTUBES

I. Introduction:

Several useful methods of gating multiplier phototubes are available. This note is primarily concerned with gating by means of controlling the voltages on the phototube electrodes. Several advantages of this method make it attractive for many applications:

(1) A relatively high speed - most tubes may be turned on or off in a few nanoseconds with appropriate circuitry. This permits using the phototubes as coincidence detectors in some applications.

(2) Very small ratios of off-to-on gain can be achieved. For example, controlling three dynodes in a 6810 gives a gain ratio of $< 10^{-6}$, and much smaller ratios are easily available.

(3) Light-or ion-feedback afterpulsing induced by large unwanted light pulses may be eliminated. This is especially useful where one desires to detect a small light signal following a much larger light signal. Under some conditions, afterpulsing following the large signal might obscure the small one, unless the larger were gated out. Note that gates following the phototube will not remove the afterpulsing.

II. High-Voltage Supply Control

The method of gating by turning the supply voltage on and off has been used* and is quite useful in some cases. It has, however, several disadvantages: (a) Where capacitors of unequal value are used across voltage-divider resistors, the quiescent voltage distribution is not achieved until all capacitors have charged. In general, the gain of the tube will not be constant during the charging time. (b) Excess noise (i.e. light) is generated when charging currents are required to flow on insulating surfaces such as the glass envelope. This excess noise dies down with a time constant characteristic of the particular tube after the voltages have been changed.

This method also has an advantageous feature, in common with the method in Sec. III below. Owing to light feedback and other regenerative process, in most tubes there is found, as the supply voltage is raised, a maximum usable gain, above which the anode dark-current increases spontaneously until limited by the voltage divider. The time required for regeneration to build up amounts to at least one transit time in the case of light feedback,** or much longer in the case of ion feedback. Thus, if the tube is gated on for the order of one transit time, a higher gain may be achieved during the on-time than if the tube is on continuously.

* Post and Shiren, Phys. Rev. 78, 81, April 1950.

** The intensity of light emitted when a step of multiplier current occurs appears to build up with a time constant of about one microsecond.

III. Gating With Individual Electrodes

A. General

The gain of a multiplier phototube may be controlled not only by means of the overall anode-cathode voltage, but also by varying the voltage of one or more of its electrodes. In effect, then, the controlled electrode performs in a manner similar to that of the control grid in a thermionic vacuum tube, and may be used to gate the phototube on or off, or to vary the gain of the tube as desired. The time required to go from the gated on to gated off condition, or vice-versa, depends on the speed at which the voltage of the controlled electrode can be changed. This speed is usually limited by the low-pass filter formed by the lead inductances in series with the interelectrode capacities.

A typical example of a gating scheme is shown in Fig. 1, where part of the voltage divider of a tube is shown. Dynode 2 (D_2) has been disconnected from its normal potential, which is that at the junction of R3 and R4, and instead connected through Ra to D1. A positive pulse of amplitude V_{DD} applied through capacitor C replaces D2 to its normal potential and the tube is "gated on" for the duration of the pulse. Alternatively, if D2 had been connected through Ra to D3 instead, a negative pulse would gate the tube on. Or, if Ra were connected to the junction of R3 and R4, either a positive or negative pulse would gate the tube off.

The term gain ratio, as used herein, is defined by the equation:

$$GR(\Delta V_E) = \frac{\text{gain with controlled electrode displaced by } \Delta V_E,}{\text{normal gain of tube } (\Delta V_E = 0)}$$

where

GR = gain ratio

ΔV_E = voltage by which the controlled electrode is displaced from its normal voltage, expressed as a fraction of the appropriate interelectrode voltage.

When the gain ratios are expressed in this way, they are, to first order, independent of the anode-cathode voltage.

B. Characteristics of the Electrodes

1. a. Dynodes

Changing the voltage on a dynode may affect the gain by: a) changing the secondary emission ratio of the affected dynode(s); b) re-focusing the secondaries so that they land on an different part of the next dynode. Mechanism a) applies to unfocused multiplies (i.e. DuMont box multiplier* or venetian blind) while both a) and b) are involved in focused multiplier (i.e. DuMont linear multiplier, RCA squirrel cage and linear mlltipliers*).

* CC8-2 indicates the type of multiplier used in the various tubes.

2. b. Cathode

The voltage between the cathode and focusing electrode may be controlled in head-on phototubes so as to cause photoelectrons to return to the cathode. The relatively high resistance of the semi-transparent cathode material in head-on tubes and the distributed capacity between the film and the glass face may slow the propagation of a gating pulse across the face of the tube unless the potential of the glass is simultaneously changed by a guard circuit.**

C. Stray Coupling

There is inevitably some capacitive or inductive electrical coupling between the gated electrode and the output electrode, represented by C_{D2-A} in Fig. 1. This stray coupling usually amounts to from a few tenths to a few micro-microfarads, and usually results in a differentiated version of the gating signal appearing in the output. The spurious signal may be cancelled by deliberately introducing signals of the opposite polarity into the output circuitry.

Experience indicates that the 6810 is one of the better tubes for gating service, having less stray coupling than most tube types, and is capable of giving high gain ratios.

III. Gain Ratios* of Various Tubes

Because of the large number of ways tubes may be gated, no attempt is made to present all the possible ways. Rather, the available data has been collected in sufficient quantity to indicate a reasonable method of gating each of the tube types listed.

A. RCA Squirrel-Cage Multiplier Types

1. Nine stage types: 1P21, 1P28, 931, etc.

a) Dynode: Typical dynode characteristics are shown in Fig. 2. A gain ratio of 10^{-2} is obtained with one inter-dynode displacement (i.e. Dn connected to Dn-1 or Dn+1). When two dynodes are gated simultaneously, the overall gain ratio is not the product of the individual gain ratios unless the dynodes are well separated (e.g. D1 and D7, but not D1 and D3).

b) Cathode: Displacing cathode by one inter-dynode voltage increment gives gain ratio of approximately 10^{-1}. Displacing cathode and dynode 4 one inter-dynode voltage increment gives gain ratio of 10^{-3}.

2. 10 stage types: 5819, 6199, 6655, etc.

a) Dynodes: See Fig. 2. Same comments as for 9 stage types.

b) Focus electrode: See Fig. 3. Photoemission of dynode 1 prevents gain ratio from being lower than about 10^{-3}.

** Farinello and Malvano, Rev. Sci. Instr. 29, 699, 1958.
* Defined on page 2.

B. DuMont Box Types 6291, 6292, 6364, etc.

a) Dynodes: In many tubes, interdynode voltage breakdown may occur at voltage displacements of > 150 volts. Fig. 4.

b) Shield (focus electrode): See Fig. 5 for 6364. Photoemission from dynode 1 gives lower limit to gain ratio of about 10^{-4}. Many 6292 shields experience voltage breakdown before gain is reduced by factor of 10.

C. RCA Linear Multiplier 6810, 7046, 7264, C7232 etc.

a) Dynodes: See Fig. 6. When several dynodes controlled, gain ratios are multiplicative if controlled dynodes are all odd or all even-numbered.

IV. Circuitry

A pulse which is intended to gate on a normally-off phototube should have its amplitude regulated in proportion to the phototube supply voltage in order to always have the controlled electrode at the optimum voltage during the on period. Two circuits to accomplish this are given in Fig. 7 and 8.

In Fig. 7, the transistor is cut-off by the positive gate pulse at PG-1. Point A then initially jumps negative by Rc/Rb+Rc x supply voltage. If the time constant RbC2 is chosen to be approximately equal to C1/2 Ra, the rate of change of voltage across C2 will cancel the rate of change of voltage across the C1's. (See Waveforms.) Rise and fall times of about 0.1 microsec. can be achieved with 2N247 transistors.

Where the gate lengths are such that the size of the coupling capacitors C1 becomes unwieldy, a scheme such as is in Fig. 8 may be useful. Here the bistable circuit draws its operating power from the divider string. Short pulses at PG-1 alternately turn the phototube on and off.

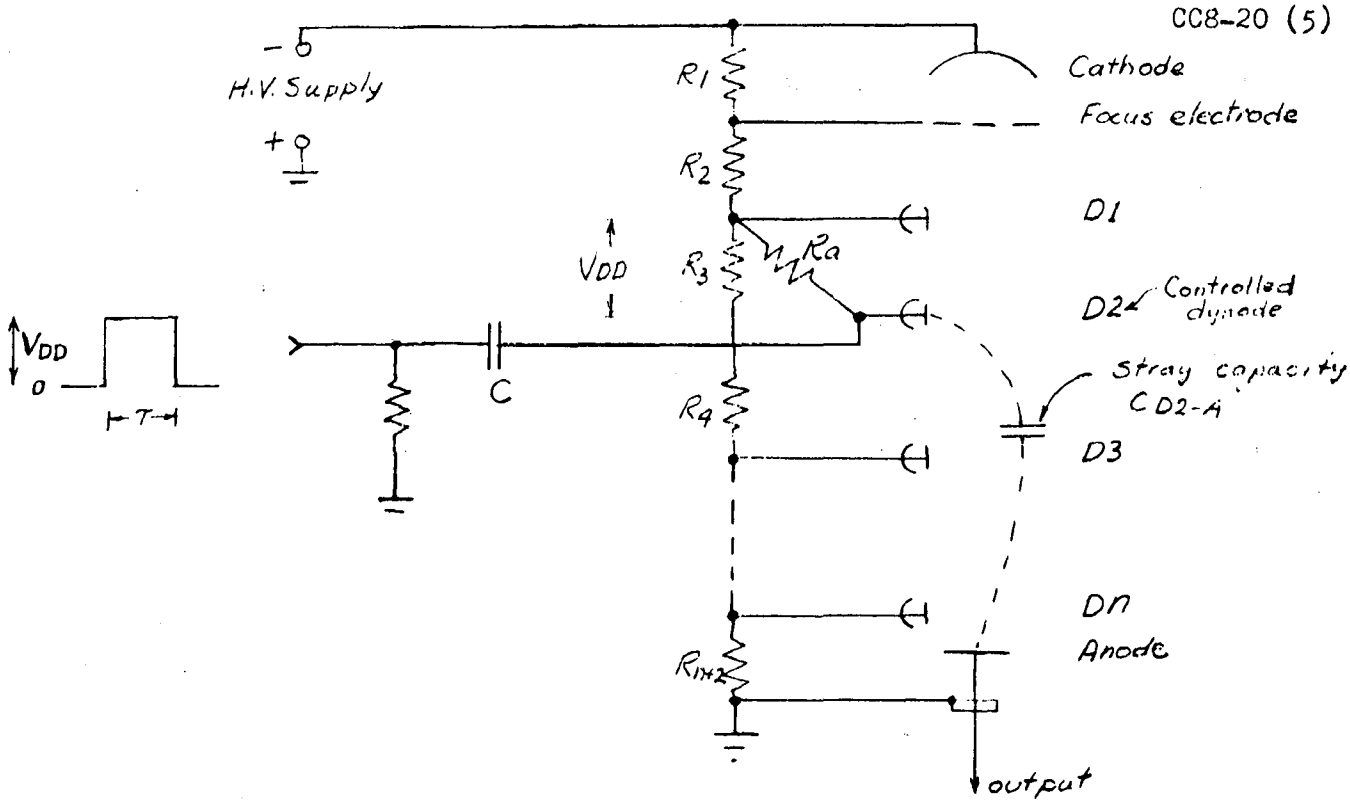

Fig. 1 - Simplified schematic of gated phototube in which the potential of dynode 2 is controlled. The tube is gated on during the positive pulse.

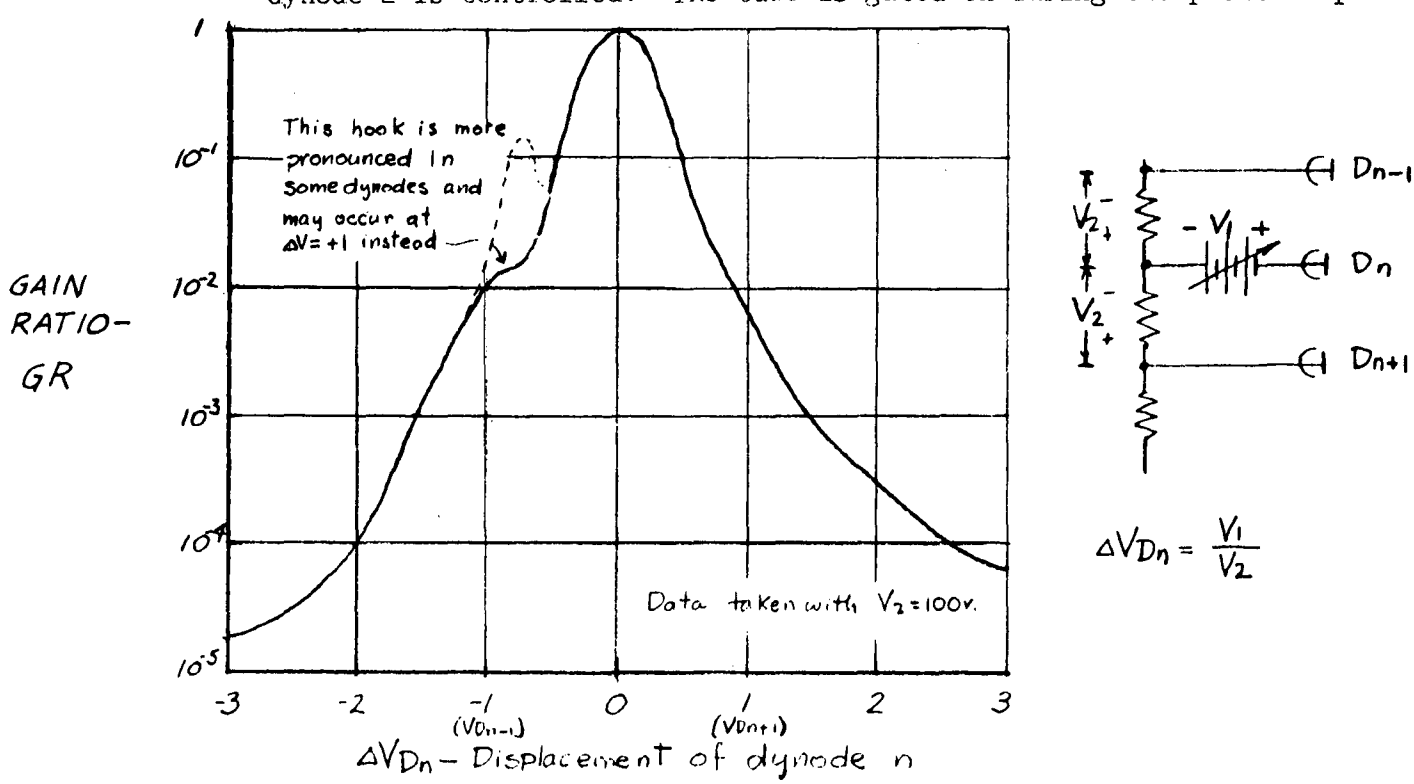

Fig. 2 - Typical dynode gating characteristic of RCA squirrel-cage multipliers (1P21, 931, 5819, 6342, 6655, etc.)

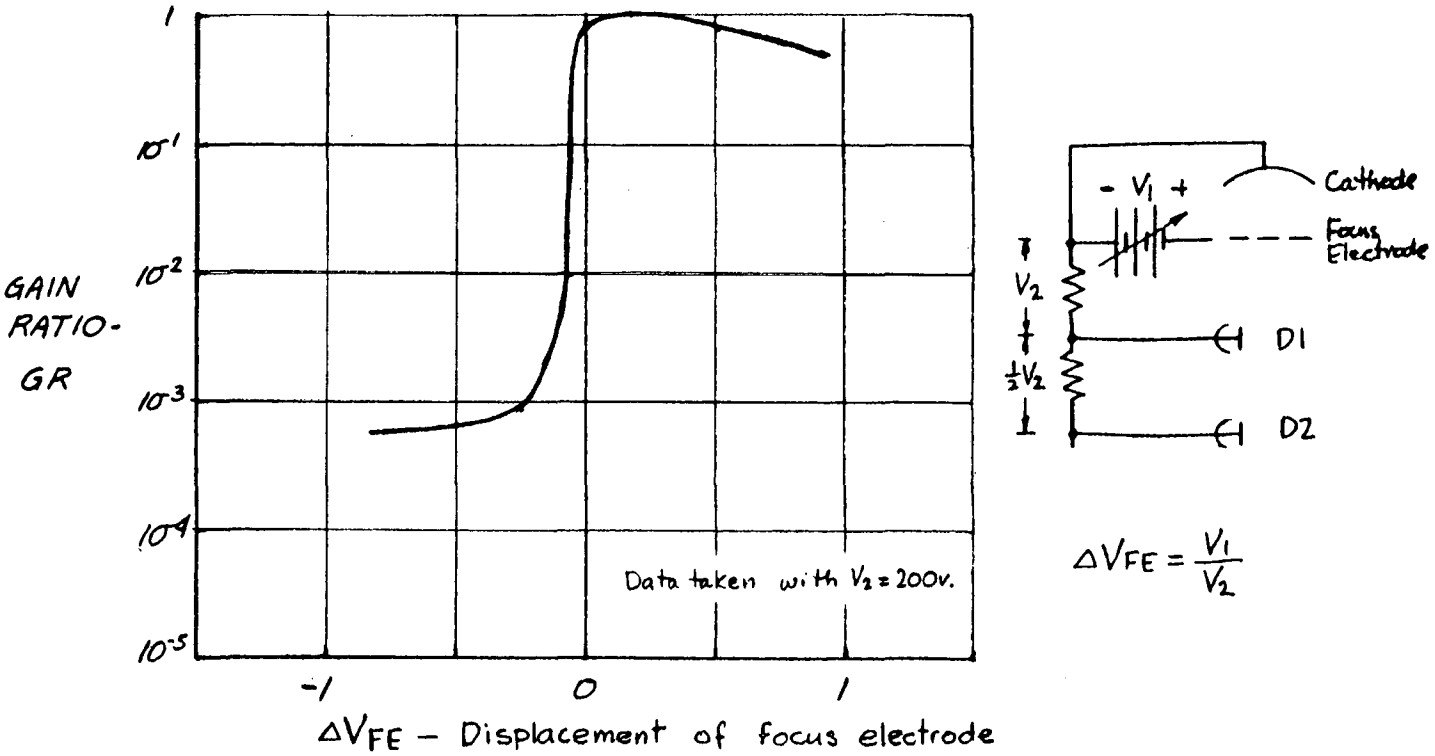

Fig. 3 - Typical focus electrode gating characteristic of a head-on phototube with squirrel cage multiplier (5819, 6655, 6199, etc.)

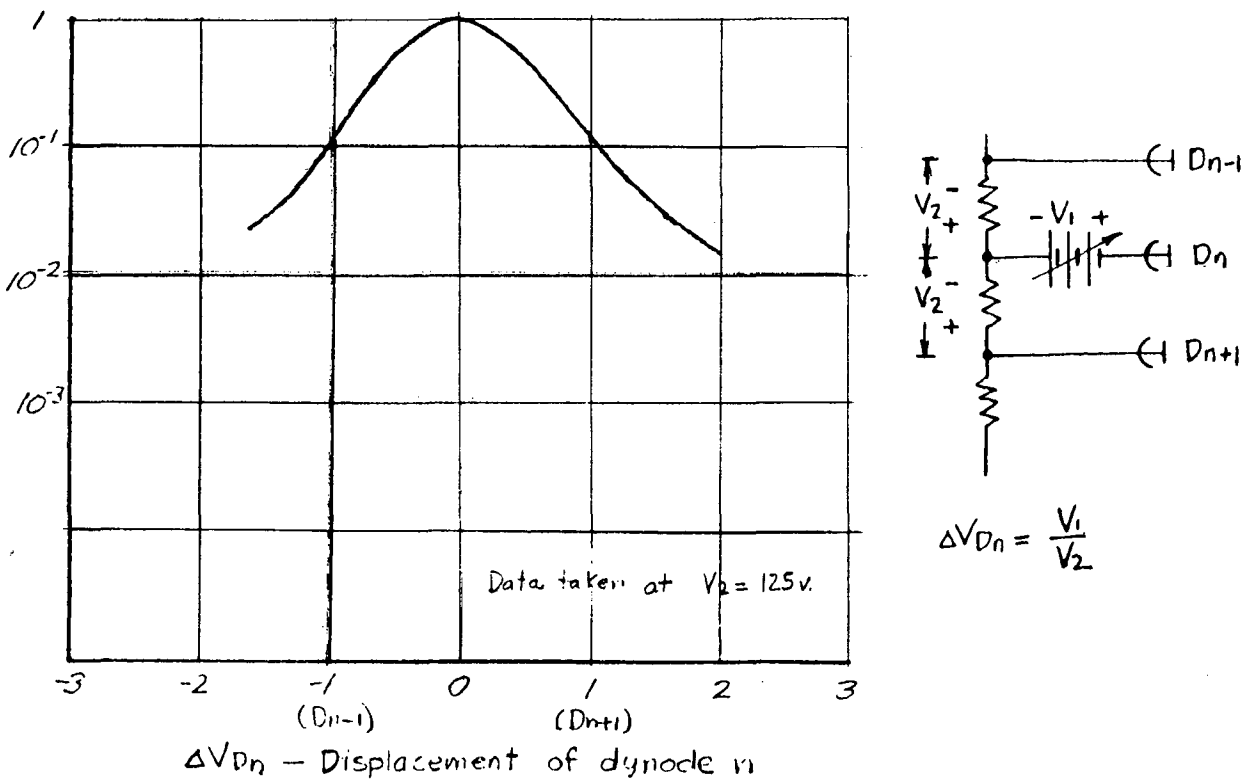

Fig. 4 - Typical dynode gating characteristic of DuMont box-type multipliers (6291, 6292, 6364, etc.)

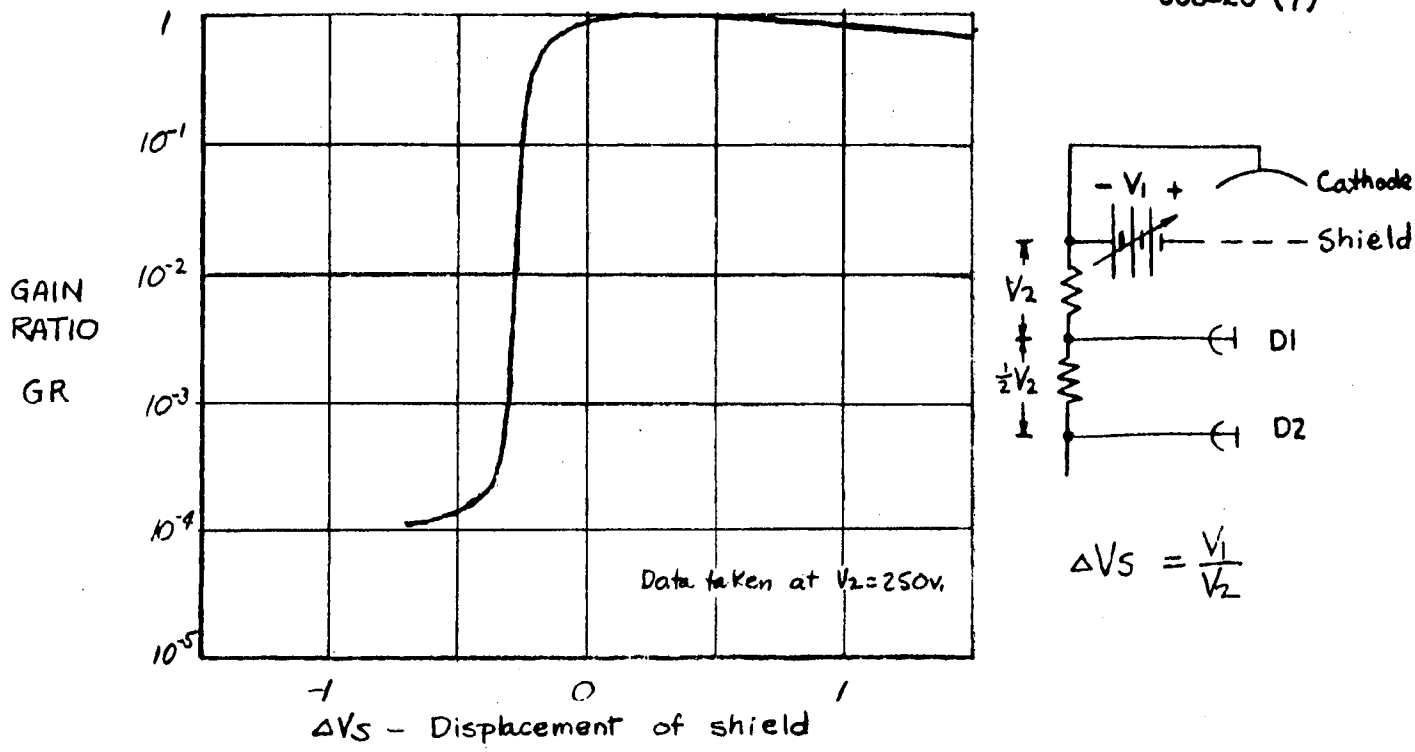

Fig. 5 - Typical shield gating characteristic of 6364.

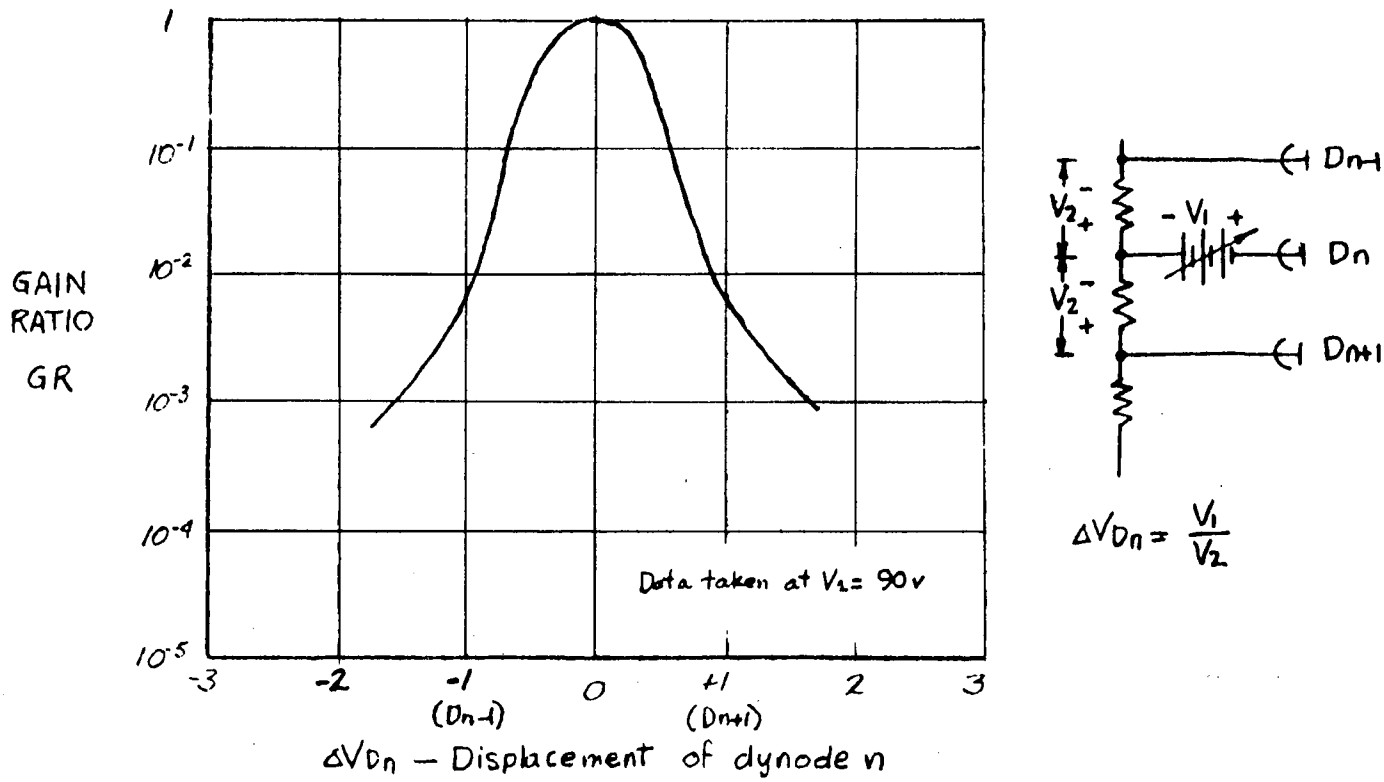

Fig. 6 - Typical dynode gating characteristic of RCA linear multiplier (6810, 7046, 7264, 7265, 7326, 07232, etc.)

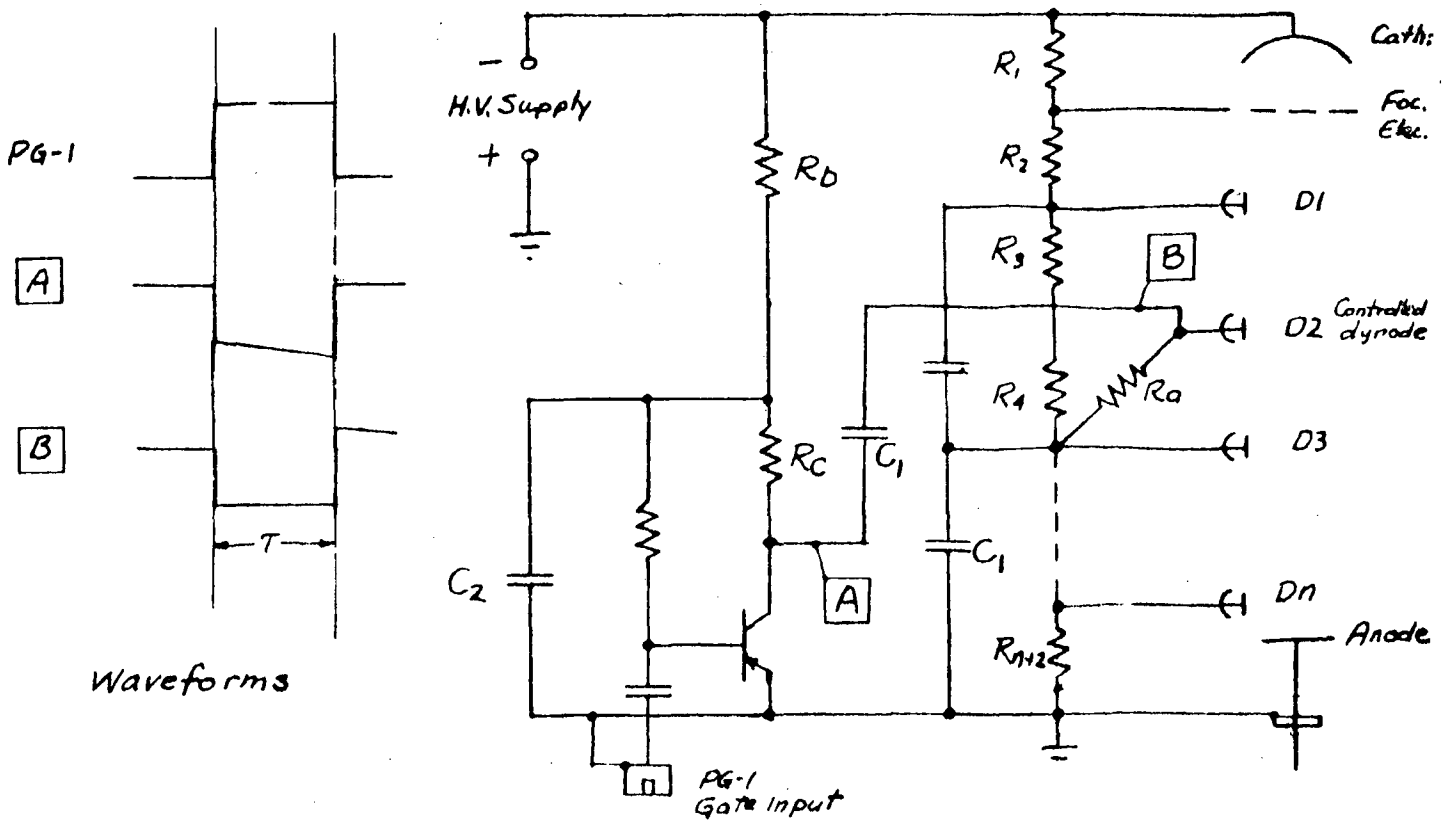

Fig. 7 - Transistor gate circuit in which magnitude of gate voltage is a proportion of the supply voltage.

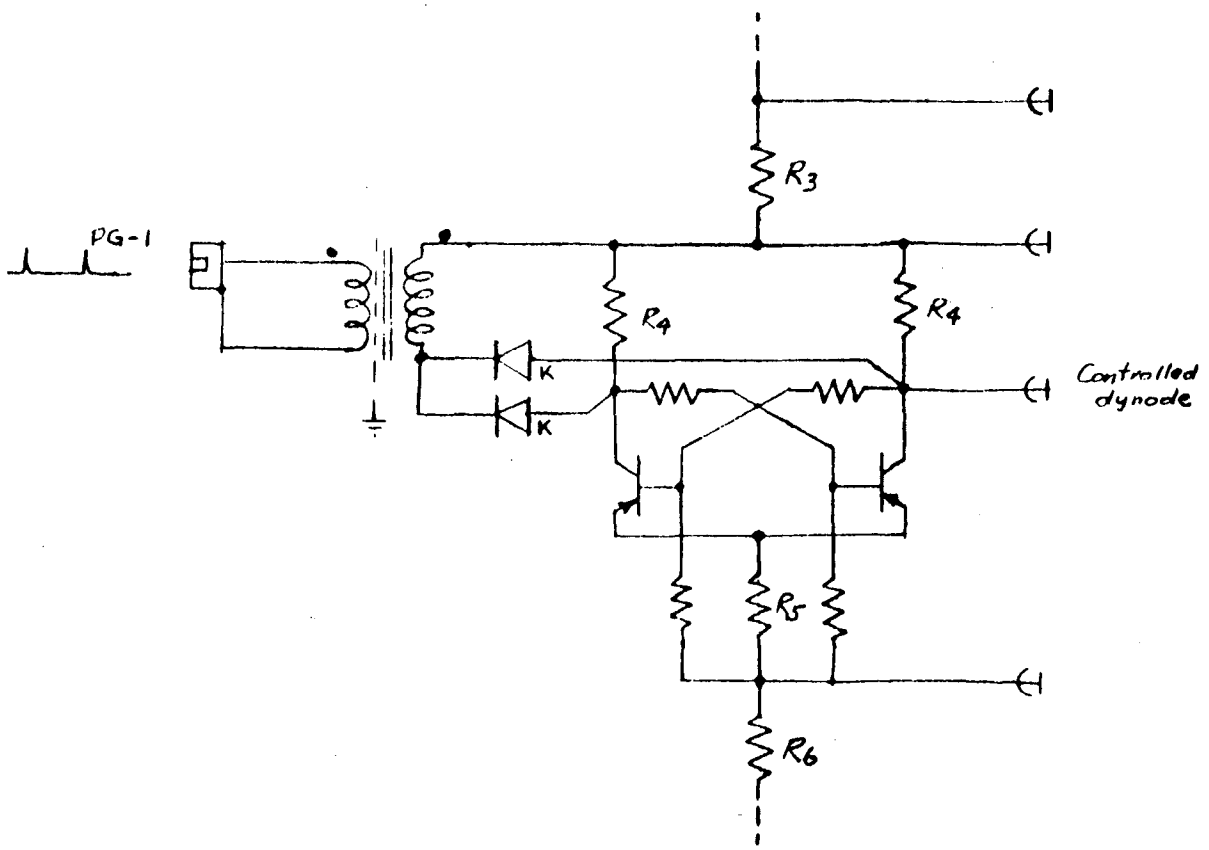

Fig. 8 - A circuit alternate to that of Fig. 7, especially adaptable to long gating times.

Lawrence Radiation Laboratory
University of California, Berkeley

File No. CC8-30
Page 1
January 21, 1959

COUNTING NOTE

Q. A. Kerns
F. A. Kirsten
G. C. Cox

A GENERATOR OF FAST-RISING LIGHT PULSES FOR PHOTOTUBE TESTING

ABSTRACT: The UCRL light-pulse generator provides flashes of light accompanied by electrical pulses generated at an impedance level of 50 ohms. The usual repetition rate is 60 per second. The light pulse rises and then falls to 50% peak amplitude in less than 1.5×10^{-9} seconds. The time relation between the light and electrical pulses is fixed.

Time resolution of 10^{-10} second is typical of measurements made with this light pulser, using conventional fast oscilloscopes (e.g. Tektronix 517), while elaboration of technique permits relative time measurements that are better in some cases by at least three orders of magnitude.

The light is emitted from a region a few mils in diameter, and thus may often be considered to come from a point source. The maximum light amplitude is great enough to current-saturate low-gain multipliers, or it may be so reduced as to release an average of one photoelectron or less per pulse from a photocathode.

In conjunction with an oscilloscope, the light-pulse generator has proved useful in testing and evaluating the high-speed aspects of light-sensitive devices. These devices include multiplier phototubes used in scintillation and Cherenkov counters and in coincidence detectors, and low-light-level image tubes. With this pulser, tests and measurements of afterpulsing, transit time, multiplier transit-time spread, cathode transit-time spread, multiplier current saturation, pulse gain, etc., can be made. A photograph of the light pulser is shown in Figure 1.

OPERATING SPECIFICATIONS:

Outputs:

1. Light pulses
   - (a) The 10 to 90% rise time is less than 5×10^{-10} seconds.
   - (b) They rise and then fall to 50% of peak amplitude in less than 1.5×10^{-9} seconds.
   - (c) Light is emitted from a region a few mils in diameter.
   - (d) Light intensity is adjustable with an attenuation ratio of approximately 100 to 1 without disturbing any electrical settings, by means of a Polaroid attenuator.
   - (e) Light intensity is adjustable with a ratio of approximately 10^6 to 1 by changing the applied voltage.
2. Electrical pulses
   - (a) The electrical pulse is generated simultaneously with the light pulse, therefore can be used as a time reference for the light pulse.
   - (b) The 10 to 90% rise time is less than 5×10^{-10} seconds.
   - (c) There is one monitor-signal, two 52 ohm trigger outputs, and one 125 ohm trigger output.

Repetition Rate: Usually 60 per second, although it may be operated at rates of 0 to 100 per second.

Power Requirements:

1. A high voltage supply, adjustable from 100 to 5000 volts dc. Current drain is less than 20 microamperes. Either polarity is permissible. The polarity of the electrical trigger pulses will be the same as the polarity of this supply.
2. An adjustable source of about 3 volts at half an ampere at 60 cps for the driving coil.

A suitable supply containing both of these power sources is shown in Figure 4.

Operating Position: Vertical, with PG-5 and PG-6 up, and PG-1, PG-2, PG-3, and PG-4, down.

Operating Environment: Operates most satisfactorily in a region free from strong magnetic fields or mechanical vibrations.

The temperature of the capsule enclosure should not exceed 150 degrees F.

LIGHT AND ELECTRICAL PULSE GENERATION: The light pulses are produced in a mercury-wetted-contact relay capsule such as is used in Clare HG 1003 relays (Clare type RP-5480). The source of light is the arc formed at the contacts of the capsule. The magnetic field of a driving loop actuates the switch contact. The contacts are normally open and when driven toward the closed position with voltage applied, an arc forms, producing the light. The resulting electrical pulse is propagated down the transmission line, GH, (Figure 2) to the resistive attenuators at Plugs 1, 2, and 4.

Energy for both the light pulse and the electrical trigger pulse is stored in the capacitance of the stationary contact of S-1 and the short lead of the 500-megohm resistor, R-13, as indicated by DE in Figure 2.

The pulse data given for both light and electrical pulses refer to the first or primary pulse in the group. Below about 1 kv, usually only the primary pulse occurs. Above this voltage a group of light and electrical pulses is produced on each mechanical cycle.

The second pulse of the group is delayed 2 microseconds or more after the first pulse, and may be used to trigger separate oscilloscope sweeps. The groups have been used in various ways in conjunction with auxiliary circuits to form gates, etc. Alternatively all signals after those derived from the first pulse may be gated out.

TRIGGER PULSE: Figure 5 shows the trigger pulse from PG-1, PG-2, or PG-4 as viewed on a 5XP11 cathode-ray tube adapted for coaxial cable connections direct to the vertical plates. The pulse has been delayed through 110×10^{-9} seconds of RG 63/U. The actual trigger pulse is shorter and higher than Figure 5 would indicate. Figure 6 gives the measured peak voltage of the trigger pulse as a function of the high-voltage power-supply setting. This setting for Figure 5 is 2400 volts. The actual peak pulse voltage for Figure 5 is about 40 volts, whereas the scope picture (which is almost the impulse response of the scope) indicates about one-fifth this amplitude and a broader pulse.

The trigger pulse is short enough so that its amplitude decays to about 1/2 the initial amplitude after traversing 100 ft of RG-9/u coaxial cable.[1]

MONITOR SIGNAL: The signal at PG-5 is the output of a capacity divider which consists of the 0.002-μf capacitor (C-1 of Figure 3) and the capacity (approximately 0.1 μμf) between the unshielded end of the cable attached to PG-5 and the energy storage circuit, DE of Figure 2, which is not accessible otherwise. The ratio of the divider is thus about 0.1 μμf divided by 0.002 μf, or 1:20,000 for an open circuit at PG-5. Gate signals required to occur a few microseconds or less in advance of the light pulse can be generated from the monitor signal.[4]

LIGHT OUTPUT: Figure 7 shows the light output in terms of the response of an S-11 photocathode as a function of the high voltage for several units of the present design. Figure 8 (upper trace) shows the approximate light-pulse wave shape as measured by a special phototube with control grid gated.[2]

The spectrum of the light emitted from the pulser shows some output throughout the visible range but is predominantly in the blue region.[5]

The fraction of the emitted light having vertical polarization ranges from .6 for a 5000 volt setting to .9 for a 200 volt setting.[6]

POLAROID ATTENUATOR: The light attenuator consists of a stationary and a rotatable disc of Polaroid film, providing a way of adjusting the light amplitude. It may be attenuated by means of the adjustment handle, (E of Figure 1) by a factor of 100 over minimum attenuation.

TYPICAL PHOTOTUBE-TEST SETUP: Figure 9 shows a typical test setup. Several tubes may view the light source through various optical paths if desired. One of the trigger tubes may appear as a fiducial mark on the oscilloscope sweep (Cable B), another may be used for Z-axis modulation, etc.

Further details on the use of the light pulser together with constructional drawing numbers and accessory equipment drawings are available.[3]

REFERENCES:

1. UCRL Counting Handbook, Counting Note CC2-1.
2. Frederick A. Kirsten, Measurement of the Shape of the Light Pulse Generated by Mercury Light Pulser 4V5572, Engineering Note EE548, April 1958.
3. Q. A. Kerns, F. A. Kirsten, G. C. Cox, A Generator of Fast-Rising Light Pulses for Phototube Testing. UCRL-8227, March 1958.
4. Same, Page 15.
5. Same, Page 27.
6. Same, Page 26.

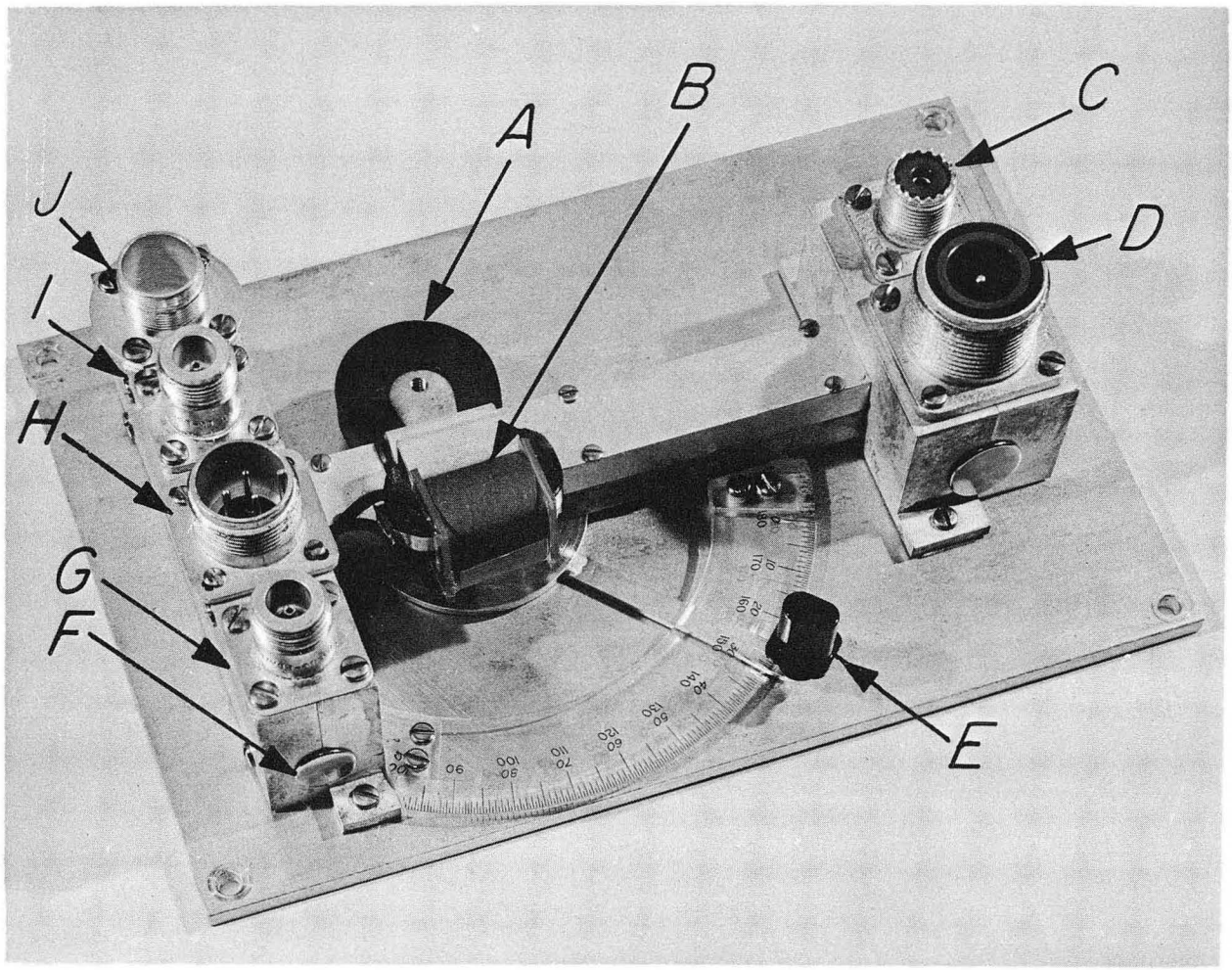

ZN-1936

Fig. 1. A rear view of the light pulser. (Light pulses are emitted from the other side.) A, permanent magnet; B, mercury-capsule driving coil; C, PG-5 monitor signal output; D, PG-6 high voltage input; E, polaroid adjustment handle; F, removable cap for high-level coaxial connection; G, PG-4 51-ohms trigger pulse; H, PG-3 driving-coil input; I, PG-2 51-ohms trigger pulse; J, PG-1 125-ohms trigger pulse.

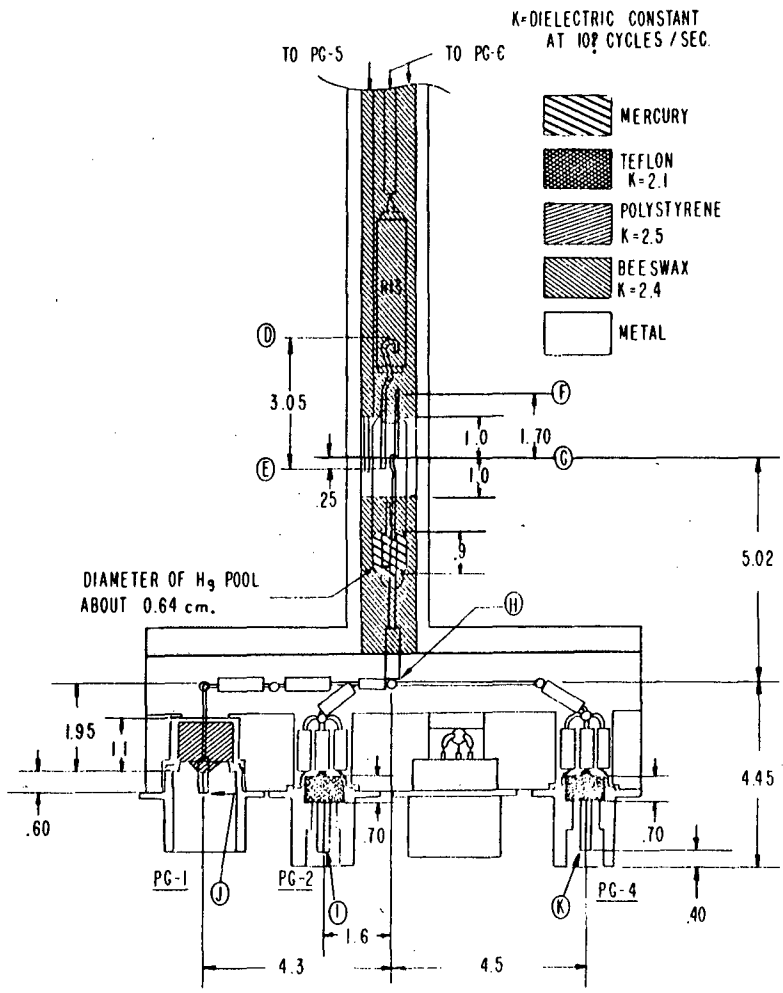

MU-15,266

Fig. 2 . Electrical pulse geometry of the light pulser. All dimensions are in centimeters.

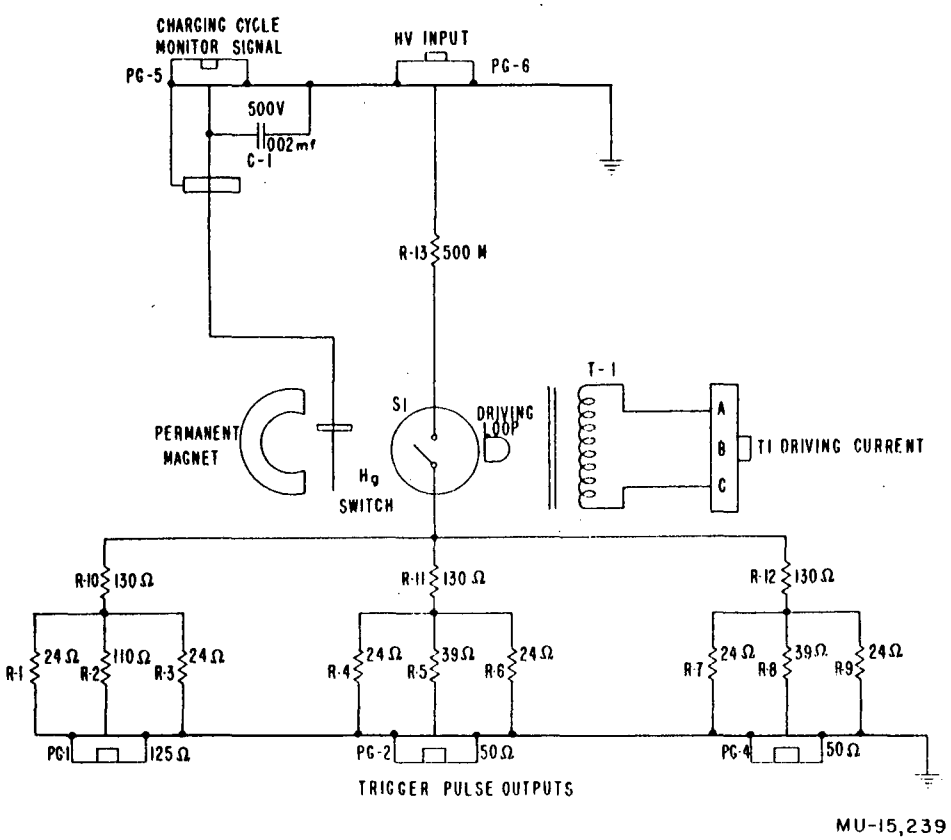

Fig. 3. Schematic drawing of the light pulser.

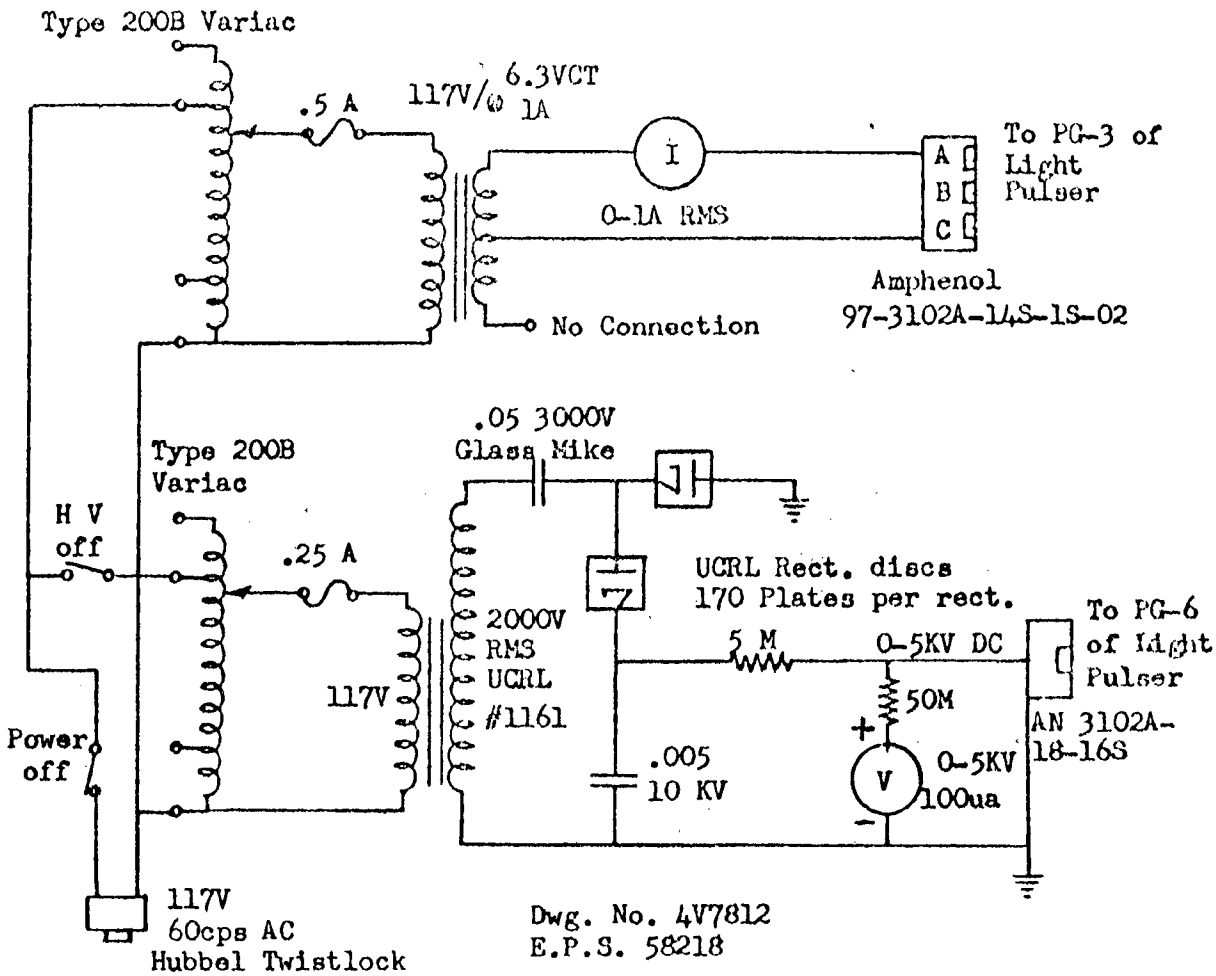

Fig. 4 Power supply for Light Pulser 4V5572.

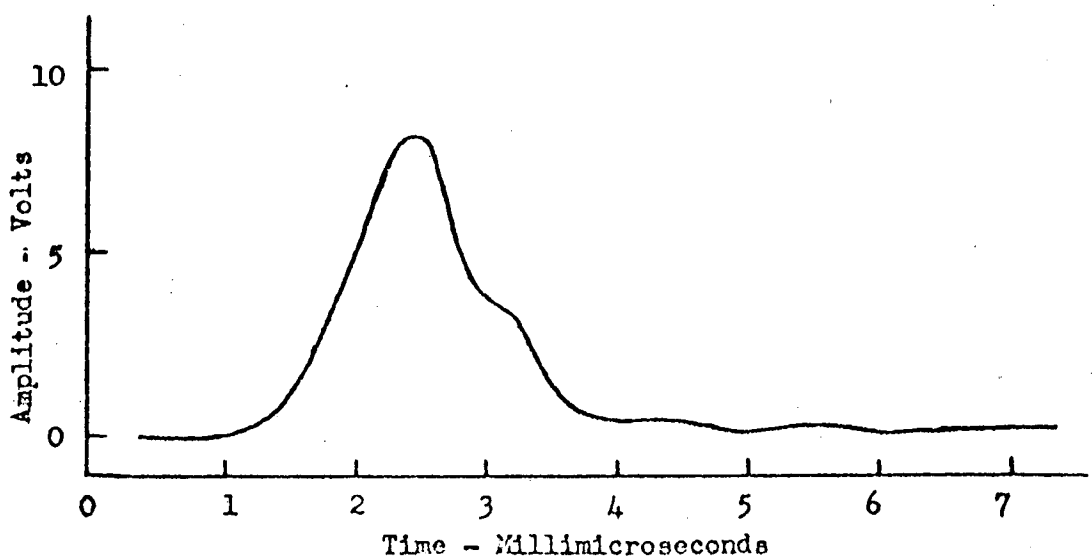

Fig. 5 Trigger Pulse

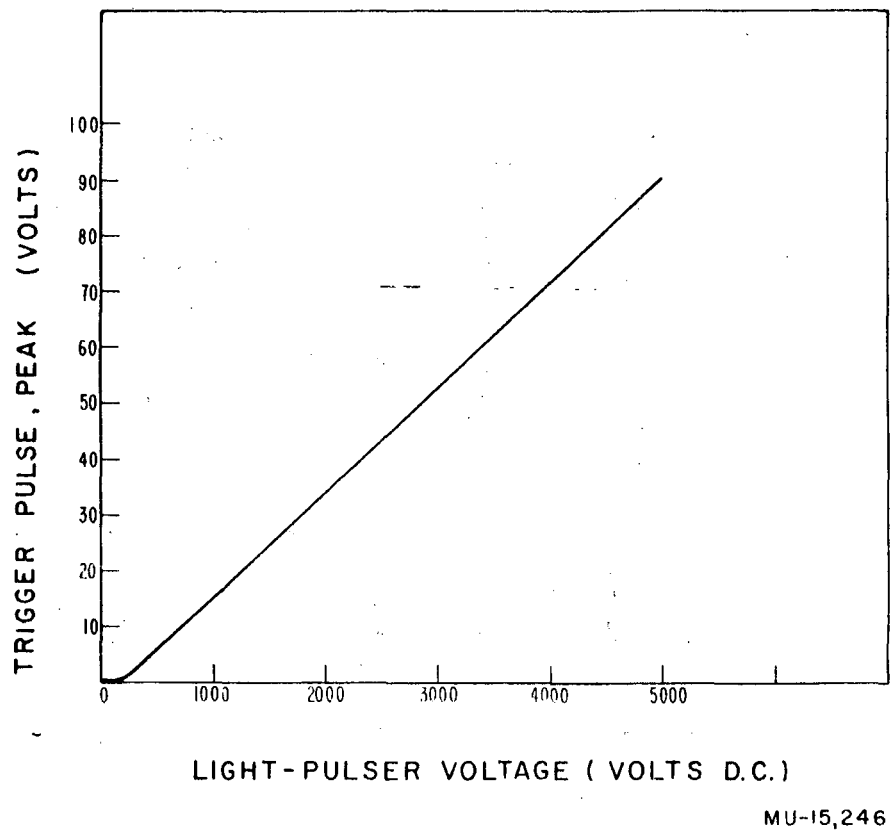

Fig. 6. Trigger-pulse output voltage vs light-pulser high-voltage setting measured at PG-1, PG-2, or PG-4.

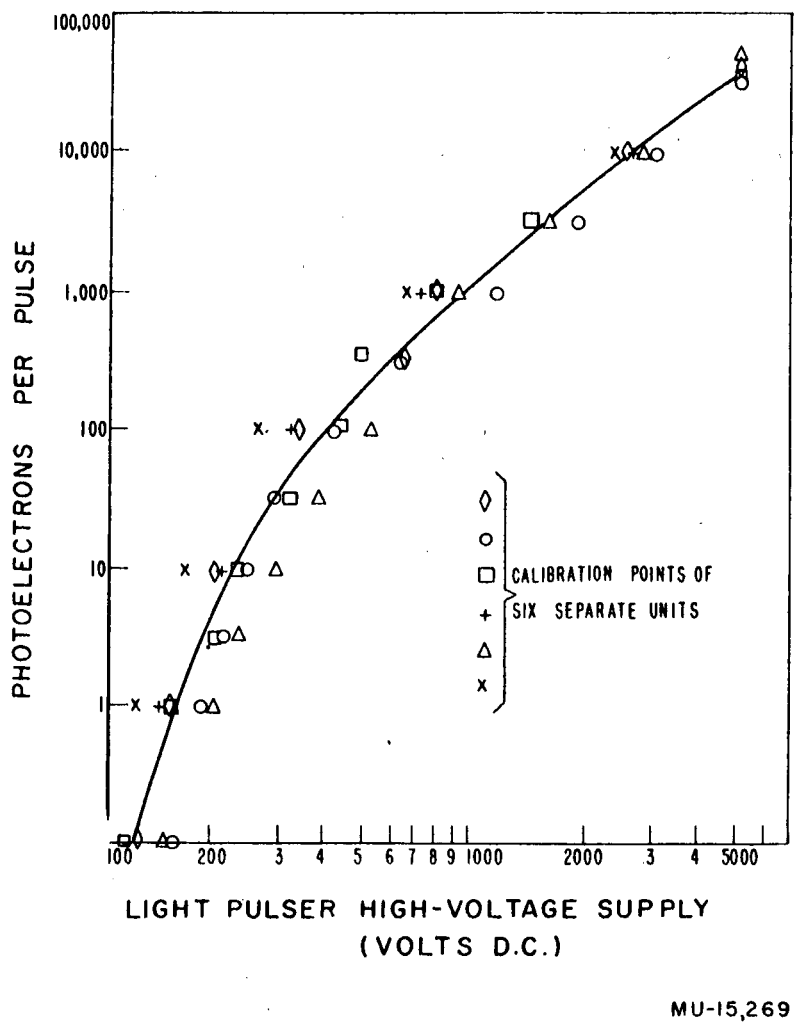

Fig. 7 . The yield of photoelectrons per pulse from an S-11 cathode subtending 0.005 steradian at the light source. The polaroid attenuator is set for minimum attenuation.

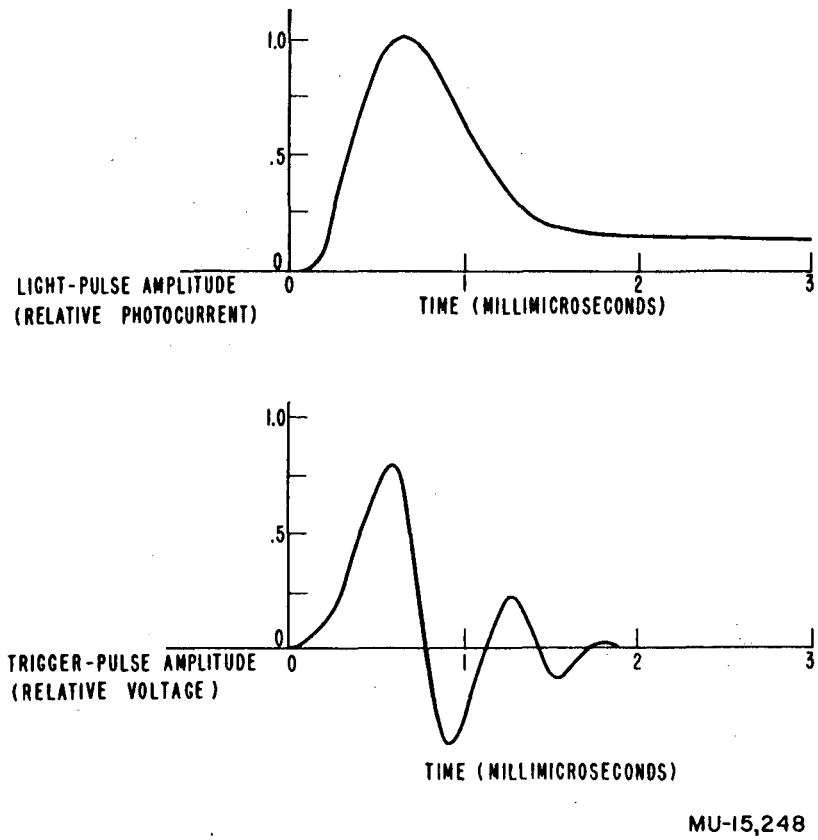

Fig. 8 . (Upper) Wave shape of the light pulse as measured with a special gated phototube.

(Lower) Wave shape of the trigger pulse as observed on an oscilloscope utilizing a K1421 traveling-wave deflection cathode-ray tube.

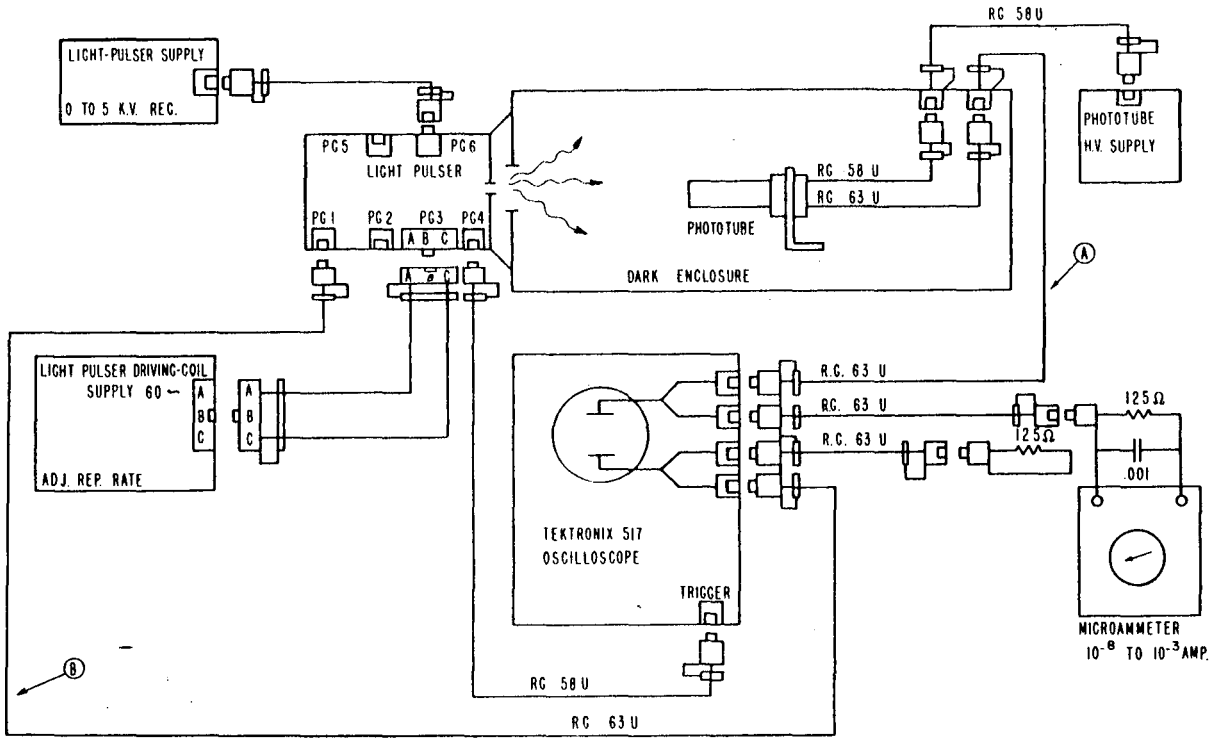

Fig. 9. Typical phototube-test setup using the light-pulse generator.

Lawrence Radiation Laboratory, University of California, Berkeley

File No. CC8-31
Page 1
March 16, 1961
T. G. Innes
G. C. Cox

COUNTING NOTE

A TRIGGERED NANOSECOND LIGHT SOURCE

ABSTRACT : A system for simulating the scintillations from nuclear events has been developed and is presently in use. This note describes the system, which includes nanosecond light sources, coax cables, splitting transformers, and a nanosecond electrical pulse generator. Special considerations when employing the system are described.

DESCRIPTION: Fig. 1 shows the system. It is used to simulate a nuclear event by producing a pattern of light pulses in appropriate time sequence at the various phototubes. Fig. 2 illustrates the arrangement. The cables at the patch panel are adjusted in length to give the desired time sequence of light pulses at the scintillators. A single high-level pulse is generated and distributed into the lamps via splitting transformers and coaxial lines. Thus, the time relation between electrical pulses in each delay channel is inherently jitter-free. The time jitter of the light pulse relative to the voltage pulse is about 0.1 or 0.2 nanoseconds.

OPERATION SPECIFICATIONS - LAMPS:

Operating Voltage Range:	500 to 4000 v
Operating Position:	Any
Amplitude Jitter:	10 to 20%
Time Jitter:	< 0.2 ns
Photon Output Visible to an S11 Phototube:	20,000 photons per pulse at 1275 volts in a solid angle of 1/6 steradian.
Light Pulse Width:	1 to 2 ns wide at half maximum height.

OPERATING SPECIFICATIONS - ELECTRICAL PULSER:

Outputs:

1. High Level Pulse
   (a) Amplitude ~3 kv
   (b) Pulse width 2 ns with a half-nanosecond rise and a half-nanosecond fall. See shape in Fig. 7a.
   (c) Source impedance, 51 ohms.
2. Trigger Pulses
   (a) One positive and one negative of the shape shown in Fig. 8
   (b) Amplitude is about 40 v for the positive trigger and 20 v for the negative trigger.

Repetition Rate:

The adjustment range is 70 to 150 pps, usually set to 100 pps by front panel screwdriver adjustment. This is the repetition rate at which the panel voltmeter is calibrated.

Power Requirements:

117, 60 c.p.s., 5 w

Operating Position:

Usually vertical, (any position that keeps the contacts from becoming bridged by the contained mercury is satisfactory).

Operating Environment:

Free from strong mechanical vibrations and strong magnetic fields (shaking of the mercury surface on the pulse generating gap increases the pulse height jitter).

Pulse Height Stability:

Pulse to pulse jitter is less than 5%. There are long-term drifts which can be corrected using the front panel meter as a relative indicator of pulse height. Pulse heights can be re-established to within ± 3%. (See section on "Electrical Pulse Operation".)

BARIUM TITANATE LAMPS: A small pulsed-light source has been developed using field-emitted electrons to initiate a discharge in hydrogen. The discharge is obtained by applying a voltage to the junction of a tungsten wire and a dielectric, in this case a barium-titanate ceramic. This ceramic exhibits a high dielectric constant, typically greater than 4000. The voltage is generated by the 3-kv nanosecond pulse generator, which will be described later. The lamp is shown in Fig. 3.

The tungsten lead is grounded and a positive pulse is applied to the titanate. This results in electrons being emitted from the tungsten due to the high field concentration at the junction. An avalanche is started in the hydrogen and contributes to the total current through the device. The gas pressure is 1/2 atmosphere; hence, the avalanche is quickly quenched upon removal of the electrical pulse. The light pulse is 1 to 2 nanoseconds in length.

Fig. 4 shows the electrical output from a 1P21 multiplier phototube when illuminated with the lamp. The photo was taken from a HP-185A sampling oscilloscope. The phototube is not saturated. Fig. 5 shows samples of seven lamps operating under identical conditions of pulse voltage. The phototube voltage is held constant. Four lamps have about 20% amplitude difference while lamps 4 and 5 have a factor of 2 greater output. Lamp 2 is an old style and would not be used in a system comprised of the other six. These figures represent about 20,000 photoelectrons incident on the photocathode.

The operating voltage range extends from 500 to 4000 volts. The best operating range in terms of amplitude stability and time jitter is at the higher voltages. Amplitude jitter is on the order of 10 to 20% more than one would estimate from the photon statistics alone.

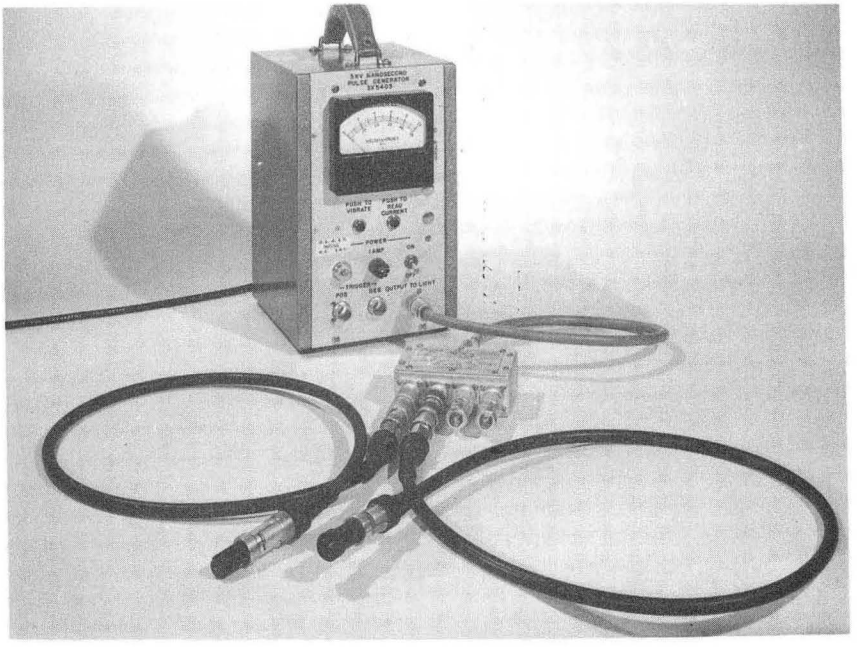

Fig. 1. 3 KV Nanosecond Pulse Generator, cables, splitting transformer, with two lamps. A Polaroid attenuator is connected to the lamp on the right.

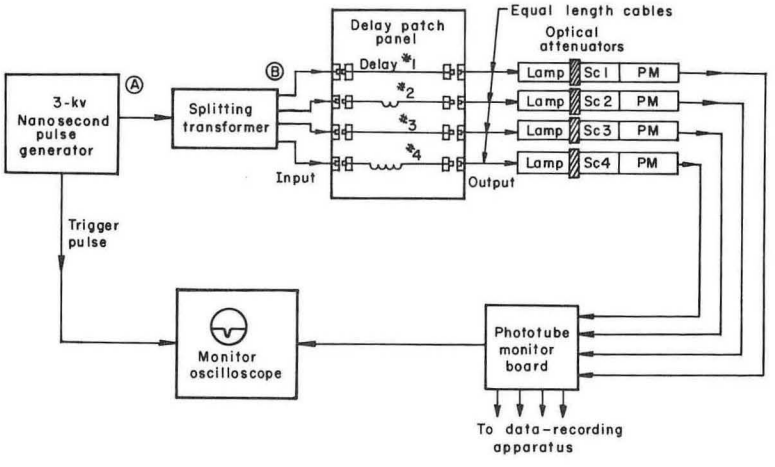

Fig. 2. Corona lamp simulation of a nuclear event.

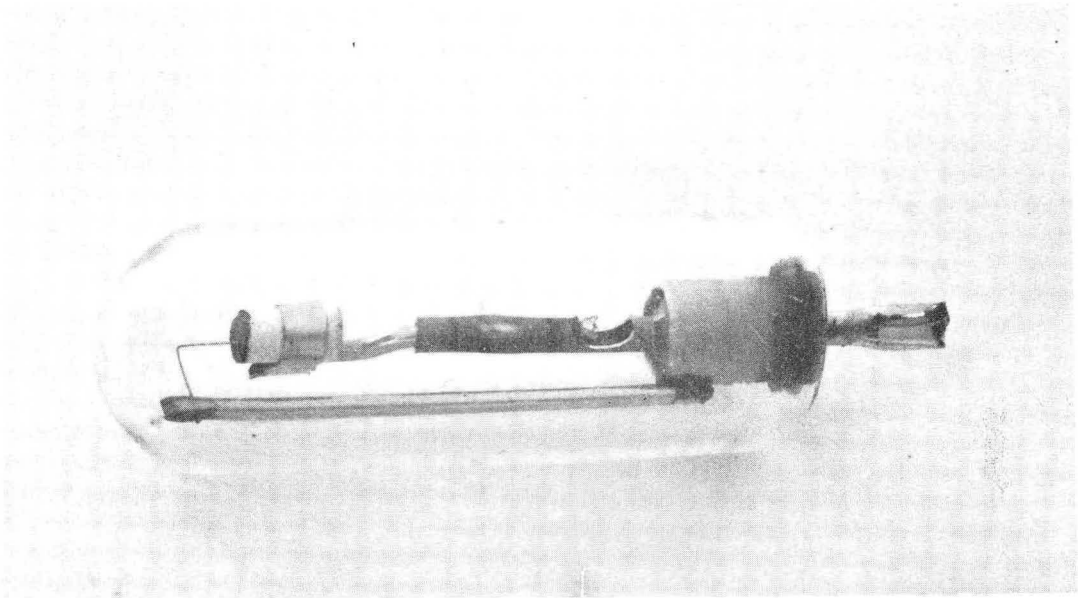

Fig. 3. The barium titanate light source. The tungsten lead and the titanate junction is on the left. Power enters at the co-ax seal shown on the right.

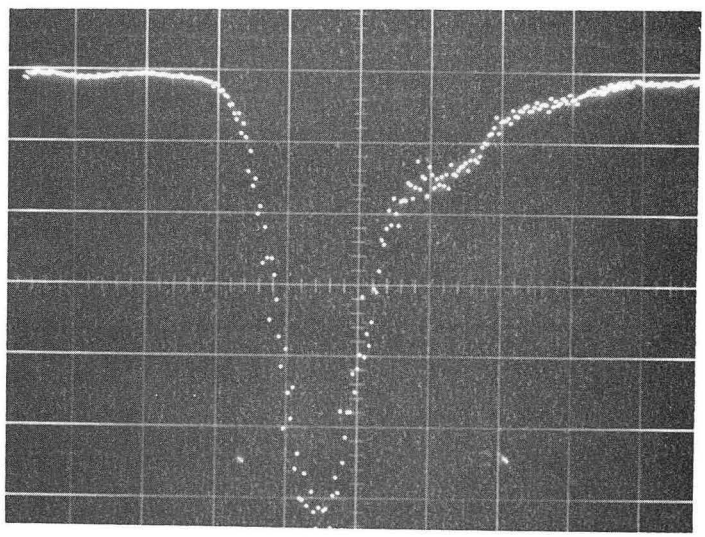

Fig. 4. Electrical output from a 1P21 phototube when illuminated with a barium titanate lamp. Horizontal scale is 2 nanosec/div., vertical calibration is 0.4 volt/div. H.P. sampling "scope" photograph.

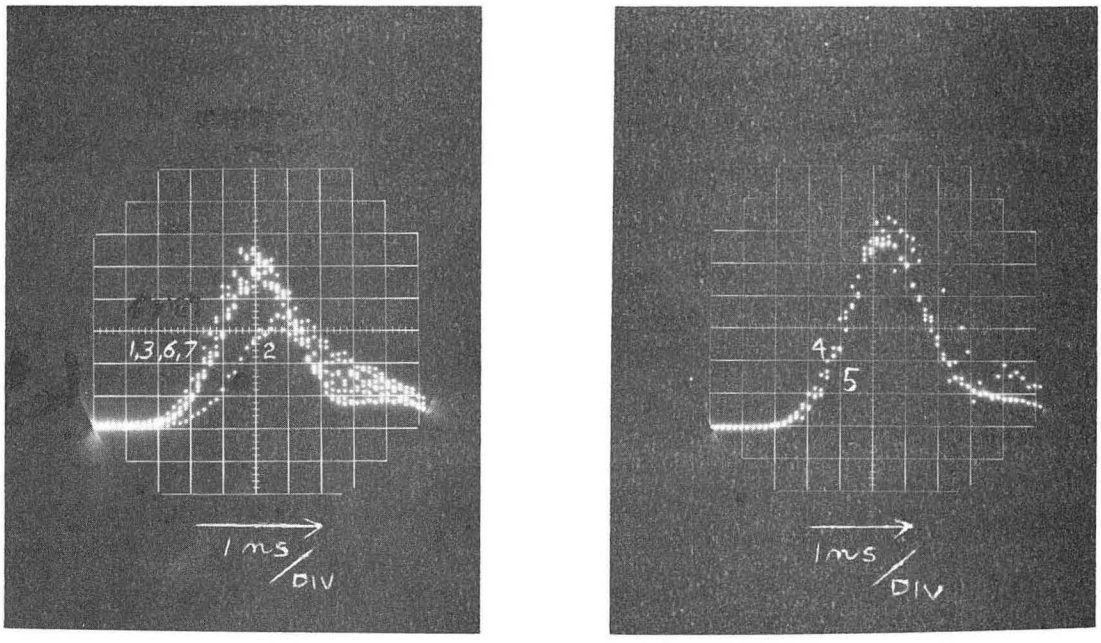

Fig. 5. Phototube output of seven lamps. The phototube voltage and lamp pulse voltage is held constant. Lamps 5, 6, and 7 are wound with coils while lamps 1, 3, and 4 are equipped with step-up transformers. Notice the small effect on timing. H.P. sampling "scope" photograph.

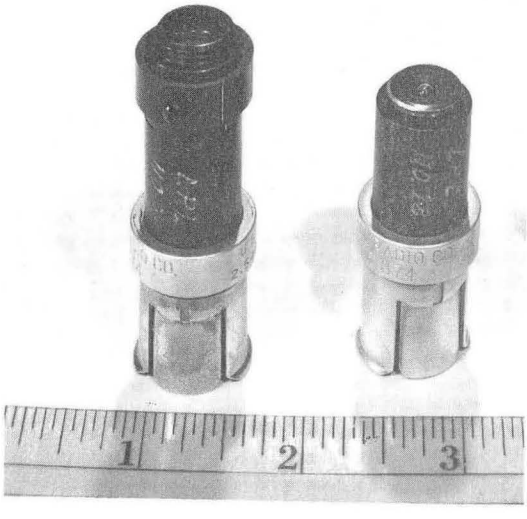

Fig. 6. Two lamp assemblies are shown. The one on the left is equipped with a variable Polaroid attenuator. The assembly screws into a 1/2-20 NF thread.

OPTICAL ATTENUATORS: Optimum light levels for a particular phototube can be achieved by optical attenuation. Pieces of film or drafting tape can be used. In Fig. 6, a variable optical attenuator is shown. This attenuator provides adjustment of the light amplitude without disturbing any of the electrical settings. An adjusting ring moves an inner Polaroid film with respect to the outer Polaroid film and the lamp. Indexing lines are spaced to give attenuation steps of two up to an attenuation factor of 64. Stops are at minimum and maximum attenuation. The maximum is greater than 100X the minimum.

Drafting tape is an economical attenuator. One layer of tape corresponds to a loss of about 50X. In quantities of one to five, the variable optical attenuator requires one day of shop time to fabricate. If sufficient interest is shown in the variable attenuator, to justify making a large number, the price per unit would be reasonable, about that of a 125 ohm connector. It should be kept in mind that the added cost of a variable attenuator may be justified in terms of the added flexibility.

LIMITATIONS IN THE NUMBER OF LAMPS: The attenuation of the cables used to connect the lamps will limit the number of lamps that can be run in a single array. The amplitude and time jitter one can tolerate is a factor one must consider. The lamps have a threshold or minimum voltage necessary to initiate the discharge. In order to insure a discharge with minimum amplitude and time fluctuations, a high-amplitude fast-rise pulse must be used. Pulse amplitude of two times threshold is adequate. Therefore, attenuation introduced by cables must be considered along with distortion of the pulse. The distortion will slow the rate of rise of the voltage. Threshold voltages vary from 300 to 500 volts. Consequently, cable runs of several feet will allow one to use two splitting transformers for a total of sixteen lamps. When enough cable is used to introduce 4 to 6-db loss, (1.6 to 2X loss) only one splitting transformer should be used. A long cable with 10 to 12-db (3 to 4 times loss) attenuation will light one lamp. However, it should be kept in mind that the number of lamps and cable lengths are dependent upon the requirements of the experiment. Over 100 lamps can be pulsed in a single array if one can tolerate the amplitude jitter.

A step-up transformer is usually packaged with the lamp. This will double the voltage at the lamp, thereby increasing the number of lamps lit in any array. The effect upon timing is small. In Fig. 5 lamps 1, 3, and 4 have transformers, while 5, 6, and 7 are wound with peaking coils.

Better performance is obtained with a step-up transformer than with a coil. The step-up transformer will, therefore, be offered as an option. The transformers (or coils) will slow the rise time of the applied voltage 10 to 20%. This will add to the time jitter of the light pulse. The amount of time jitter of the light may not be as important as the amplitude jitter of the light. Where cable loss is a factor and/or a large number of lamps are to be lit by a single electrical pulse, the transformer should be included. Amplitude jitter of the lamps will generally cause time jitter in the electronics that follow. Again, it must be stressed that the optimum combination of lamps, transformers, and cables will be dependent upon the requirements of the experiment. Lamps with transformers will be color-coded red when viewed from the end with the GR connector.

If the applied voltage to the lamp is increased indefinitely, arcing occurs in the lamp. If only one lamp is to be used, a 6-db pad (2X loss) or splitting transformer should be in series with the lamp. The lamps are terminated by 51 ohms inside the package. Fifty-ohm cables should, of course, be used. There are high electric fields around the lamp so the package helps reduce stray electrical radiation.

ELECTRICAL PULSE GENERATOR: The 3-kv nanosecond pulse generator (shown in Fig. 1) provides the electrical pulses to excite the corona lamps. The output is a pulse of about 3 kv in amplitude at an impedance level of 51 ohms. The pulse width is 2 nanoseconds with a repetition rate of 100 per second. The trigger pulses provided are derived from transformer coupling to the high-level pulse and are useful in starting oscilloscope sweeps and as markers along the trace.

ELECTRICAL PULSE OPERATION: The electrical pulses are generated by switching a charged coaxial cable into an output transmission line of matched impedance (51 ohms). A mercury capsule[2] in a constant-impedance oil-filled enclosure is the switch. The capsule relay contact is not vibrated to produce contact closure. Instead, the voltage on the charging cable periodically rises to the breakdown potential and a spark occurs. Pulses are produced at about 100 pulses/sec. A simplified schematic diagram of the generator is shown in Fig. 9. The entire circuit is shown schematically in Fig. 11.

After some hours of operation or when it is desired to repeat pulse heights from a previous time, it is possible to redistribute mercury on the contact surfaces. Provisions are made to vibrate the relay contacts for this purpose by means of a front-panel button. In general, continuous vibration by depressing the button adds mercury to the surface of the contacts and short "bursts" of vibration by the button knocks more mercury off of the contacts. The most mercury can be made to cling to the contacts by physically inverting the case or by shaking it vertically. (Sharp jolts against hard objects are undesirable.) The amount of mercury on the contacts changes the gap width and, therefore, the breakdown voltage. As seen in Fig. 9, the supply voltage to the 80 meg. charging resistor is a function of the current feedback. If the gap size is reduced, causing a higher repetition rate, the average current through the capsule rises, acting to reduce the supply voltage. The front panel meter indicates the supply voltage to the 80-meg. charging resistor and because of the previously mentioned current-feedback regulator, it indicates gap-size changes and, therefore, pulse-height changes. It does not read pulse height absolutely; however, it has been found that by measuring the actual pulse height with a peak-reading diode, the front-panel meter may be used to repeat pulse heights from a previous time to within ± 3%.

The pulse height into a 51-ohm load at the generator is equal to one-half of the breakdown voltage minus one-half of the arc drop across the spark.[3] As mentioned previously, the attenuation in coaxial lines reduces the pulse delivered some distance away.[4] When the front-panel "push-to-read current" button is pressed, the meter is switched to read the average current through the capsule.

CHECKING NORMAL OPERATION: Approximately 12 μa and a reading of between 6.5 and 7.5 kv together with a spark check at the output is an indication that the instrument is operating normally. The spark check can be made by holding a grounded conductor about 1/64 of an inch from the center conductor of the output. It is good practice to have output pulse terminated at all times in a resistance of approximately 50 ohms.

Figure 8 shows representative pulses obtained from the "Pos" and "Neg" trigger outputs.

Construction and checkout information is referred to at the end of this note.[5]

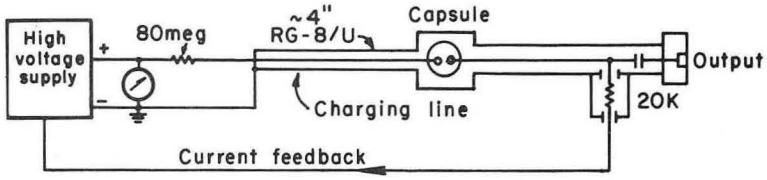

Fig. 9. 3 KV Nanosecond Pulse Generator simplified schematic.

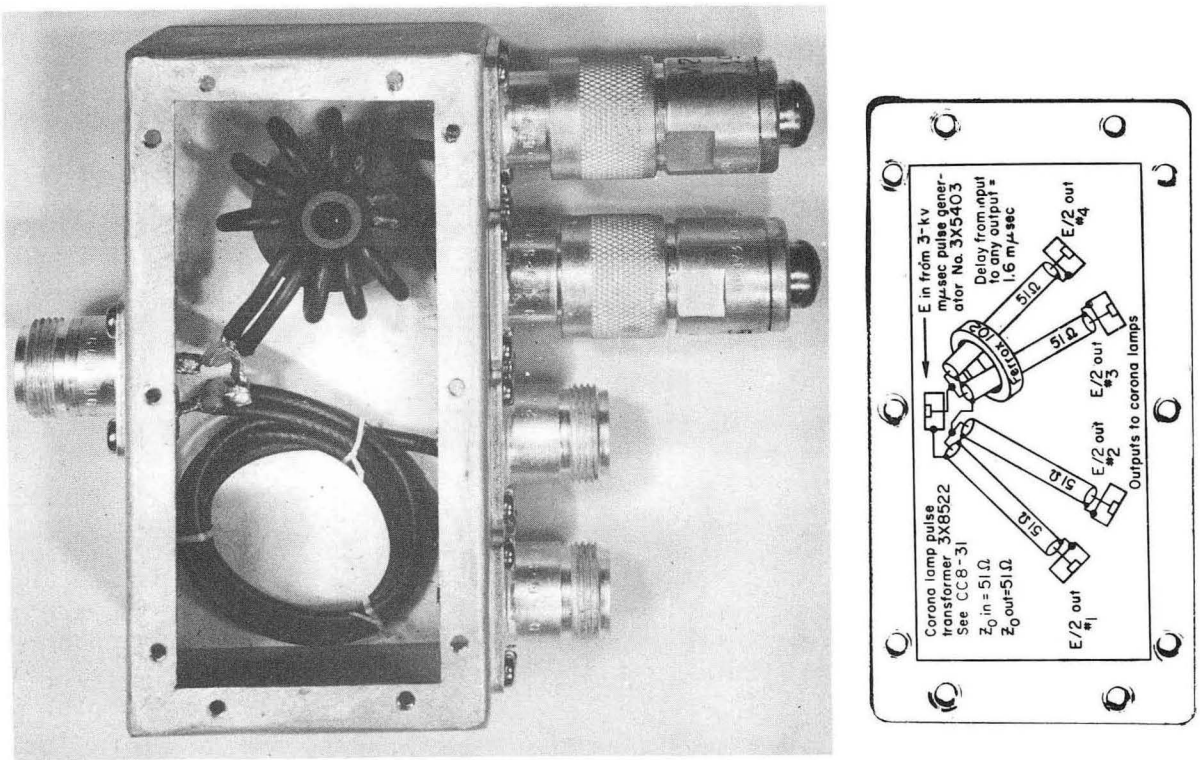

Fig. 10. Pulse splitting transformer.

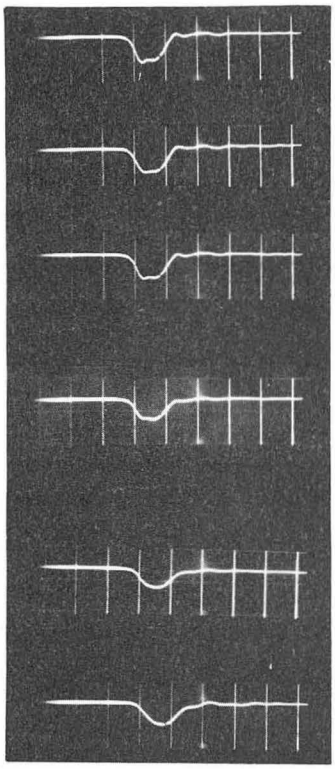

(a) The 3000-v pulse output from the generator.

(b) One of the four 1500-v outputs from the splitting transformer.

(c) A 3000-v generator pulse after passing through 22 ft. of RG-8/U.

(d) Pulse (a) After passing through 76 ft. of RG-8/U. Amplitude is about 2400 v. The amplitude loss is 20%.

(e) Pulse (a) After it passes through 55 ft. of RG-55/U. The amplitude loss is 25%.

(f) Pulse (a) After passing through two splitting transformers cascaded, plus 55 ft. of RG-55/U. Amplitude is 540 v. With no loss the amplitude would have been 750 v.

Fig. 7. Waveshapes for some combinations of generator, transformers and cables. Sweep speed is 2 nanosec/div.

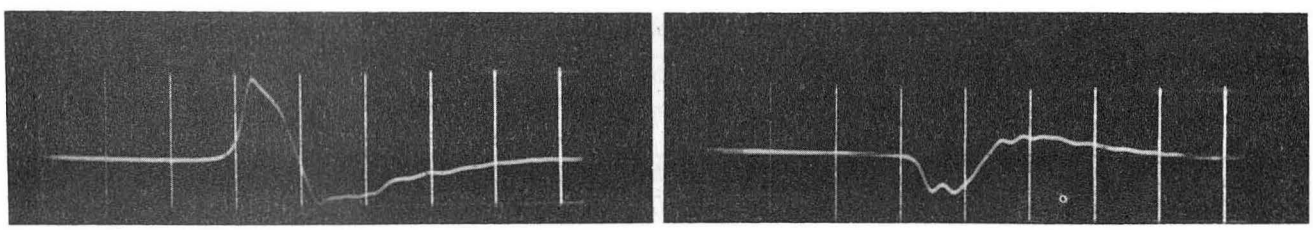

Fig. 8. Typical trigger pulse shapes.

Vertical sensitivity is about 30 v/cm. Sweep speed is 2 nanosec./cm.

SPLITTING TRANSFORMERS: The input and output impedance of the splitting transformer is 51 ohms. Four equal and synchronous outputs are provided at just half the input voltage. Thus, one transformer can feed four others to produce sixteen identical signals at 1/4 the voltage level of the primary pulse generator. The rise time of the transformers is adequate for an additional cascade, from which there would be 64 output channels at 1/8 the voltage. There is some loss in rise time and amplitude in the transformers, but it is less than the loss in cables that are used to delay and distribute the pulses. The transformers are constructed of four equal lengths (1.6 nsec) of miniature 51-ohm coaxial cable (RG174/U). The series-parallel connection of the four cables may be seen in the photograph of the transformer, Fig. 10. Two of the four cables have a voltage pulse along the shield length, and are wound on a ferroxcube 102 toroid 1 in. in diameter to raise the impedance of this shunt path.

Figure 7 shows wave shapes for some combinations of generators, transformers, and cables. RG9/U has been used for moderate delay, RG55/U for short delays or patch cables. Styroflex cable 1-in diameter has been used for 150-nsec delay and would be satisfactory for delay up to a microsecond. GR874 cable connectors can be used with both RG/U cable types. Type N connectors can be used with RG9/U and BNC connectors with RG55/U. The generator, transformers, and cabling systems have been maintained in coaxial configuration throughout in order to keep spurious radiation from other circuitry. (RG9/U and RG55/U are the double shielded versions of RG8/U and RG58/U.)

REFERENCES:

1. Q. A. Kerns and G. C. Cox, UCRL 9269, A Triggered Nanosecond Light Source, October 10, 1960.

2. The capsules used were obtained from the Western Electric 275C and from C. P. Clare and Company HG 1003 mercury-wetted contact relays.

3. Lewis and Wells, Millimicrosecond Pulse Techniques, McGraw-Hill Co., 1954, Page 100.

4. Counting Handbook, File No. CC2-1.

5. 3-kv Nanosecond Pulse Generator 3X5403 and 3X5413.
Engineering Note--Assembly Details EET-747
Engineering Note--Checkout Procedure EET-770

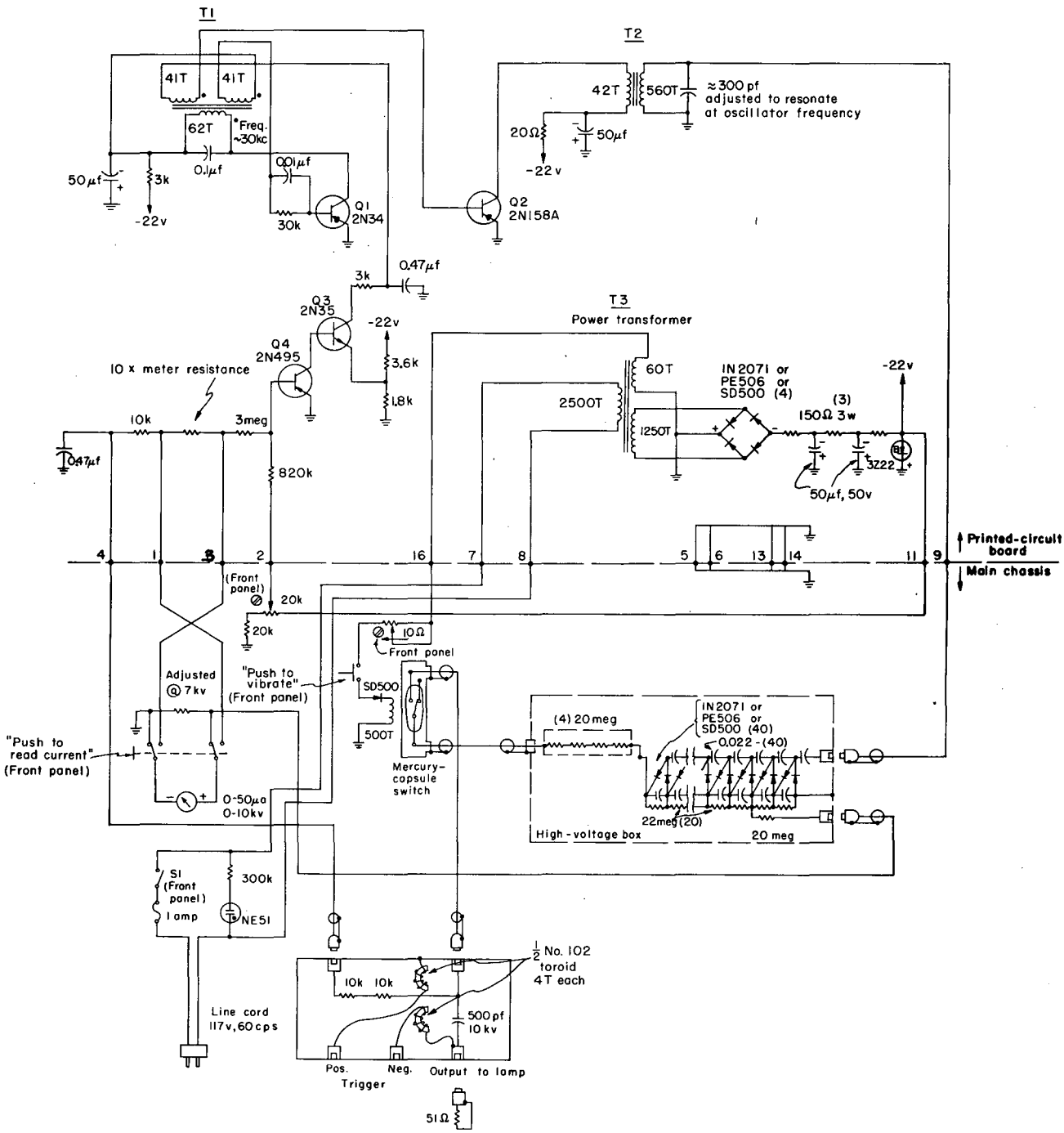

Fig. 11. 3 KV Nanosecond Pulse Generator - schematic

File No. CC 9-5C (1)
H. G. Jackson
Rev. August 2, 1966
L. Wagner, D. Burton

Lawrence Radiation Laboratory, University of California, Berkeley

COUNTING NOTE

RADIATION LABORATORY SCALERS OPERATING CHARACTERISTICS

Tests have been made on the decade scaler presently in use at the Radiation Laboratory and a summary of the results is shown in Table I.

TABLE I NOTES:

(a) As a scale of 1000, limited by mechanical register.

(b) This consists of a scale-of-ten unit that can be cascaded indefinitely.

(c) This unit is a dual scaler, each scaler having a 999,999 count capacity. By a selector switch either scaler may be read out on front panel Nixie type indicator tubes. Tape punch and typewriter readout are also available when using the readout unit in conjunction with the scaler.

(d) These measurements were made using 5 nsec pulses.

(e) This unit is a dual scaler, each scaler having a 9,999,999 count capacity. Each scaler is read out on its own set of Nixie type indicator tubes. Tape punch and typewriter readout are also available when using Readout Unit 11X1541 P-1 in conjunction with the scaler. This scaler can be added to a string of 10 MHz Scalers (11X1071) for readout purposes.

(f) The 100 MHz Decade Scaler is a pre-scaler - a positive 4 Volt output pulse is available via a front panel BNC to drive a 10 MHz Scaler. Readout signals are present at the NIM-Bin plug: 1-2-4-8 BCD, Logic "1" = + 12V, Logic "0" = 0V.

SCALER	SCHEMATIC DRAWING NUMBER	
5 MHz	Mod. 4 (5-1/4" bin)	Mod. 5 (3-1/2" bin)
	3X7274	4X1024 - Decade Unit
	4X1014	4X1034 - Decade-Register Unit
	3X3744	3X9974 - Base Unit
10 MHz	11X1071 P-3 - Scaler	
	11X1541 P-1 - Readout Control	
10 MHz Decade	11X1081 P-1 - Scaler	
	11X1091 P-1 - Discriminator	
	18X1020 P-1 - Bin	
100 MHz Decade	18X1100 - Pre-Scaler	
100 MHz, T.S.I.	Instruction Manual	

LW/mlr

TABLE I

A TYPE	B FIRST USED	C DISC-RIMIN-ATOR	D INPUT	E DOUBLE PULSE RESOL.	F MIN. RESOL. FOR 1000	G MAX. CONT. COUNT RATE	H MAX. BURST COUNT RATE	I COUNT CAPACITY	J RESET	K INPUT IMPED. OHMS	L POWER REQ.
5 MHz Mod. 4 & Mod.5	1960	Optional	Pos. 5-20 V 0.04 μs	0.1 μs	0.17 μs	15 Kc NOTE (a)	5.5MHz	NOTE (b)	Elect.	400	115 VAC @ 0.3a
10 MHz Scaler	1963	Yes	Pos. 0.1-1.1 V 10 V Max. Neg. 0.2-2.2V 20 V Max. 5 nsec. NOTE (d)	0.1 μs NOTE (d)	0.1 μs NOTE (d)	10 MHz	10 MHz	NOTE (c)	Elect.	125	115 VAC @ 1.5a
10 MHz Decade Plug-in	1964	Disc. Plug-in must be used.	Pos. 0.1-1.1 V or 1.0-11 V Neg. 0.2-2.2 V or 2.0-22 V 5 nsec NOTE (d)	0.1 μs NOTE (d)	0.1 μs NOTE (d)	10 MHz	10 MHz	NOTE (b)	Elect. & Push-button	125	Power supplied by bin supply.
100 MHz Dual Scaler	1966	Yes	Neg. or Pos. 0.1V-10 V	10 ns NOTE (d)	10 ns NOTE (d)	100 MHz	100 MHz	10^7 NOTE (e)	Elect. & Push-Button	50	115VAC @ approx. 0.9 Amps
100 MHz Pre-Scaler	1966	No	Neg.Min. 300 MV 2 ns Neg.Max. 1 V @ 1 μs	7 ns @ 2 ns Pulse Width	7 ns	100 MHz	100 MHz	NOTE (f)	Elect. & Push-Button	50	+ 12 V - 24V from NIM Bin

File No. CC 9-8A (1)
February 15, 1966
H. G. Jackson

Lawrence Radiation Laboratory, University of California, Berkeley

COUNTING NOTE

DECADE SCALER MODEL 5

I. SUMMARY

This scaler is an all semi-conductor unit capable of scaling pulse inputs up to a rate of 5×10^6 per second. Visual read-out is by means of indicating meters (0-9 count). Provision is also made for electrical read-out in a (1-2-2-4 code) four-wire system from each decade. Modular construction is used for ease of maintenance, each module being a 3-1/2" high printed circuit board of the basic scale of ten that can be cascaded indefinitely. However, not more than four units can be inserted into one printed circuit bin.

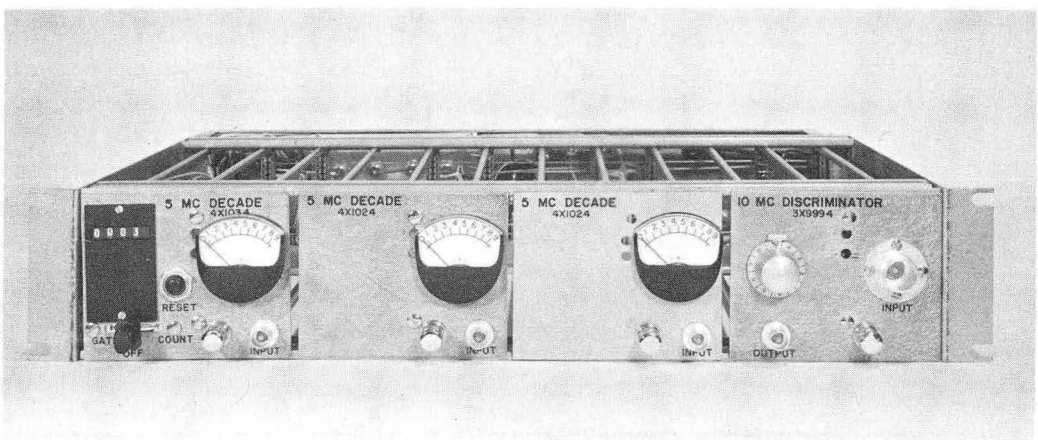

ZN-5408

Fig. 1 - Front Panel View of Scaler

II. SPECIFICATIONS

Minimum resolution time	0.2 μs
Maximum counting rate	5×10^6 per second
Register speed	15 per second (4-digit register)

Input Requirements

a) Minimum amplitude - +5 V peak for pulses with rise time less than 20 ns. For pulses with rise times greater than 20 ns the required sensitivity is approximately 150 volts per micro second of rise time.

b) Maximum amplitude - Approximately 4 times minimum amplitude of a).*

c) Minimum pulse width - 0.04 μs.

Count Switch

a) In STOP position scaler does not count.
b) In COUNT position scaler will count continually.
c) In GATE position scaler will count only during the interval that a +4 - +20V gate pulse is applied to the gate input.

Reset to Zero

Electrical and register reset obtained simultaneously by pushing reset button. Provision is also made for resetting remotely through an external reset connector on the rear chassis. This also allows for any number of units to be reset by one reset button.

Presentation - Visual by means of indicating meters (0-9 counts).

Readout

By means of a 4-wire system from each decade (1-2-2-4 code). Open circuit voltage is -7 volts for "0" state and -13 volts for "1" state with an internal impedance of 10 kilohms.

---

* Memory time of the first flip-flop is about 200 ns. Input pulses of 200 ns width with the trailing edge of the pulse falling faster than 150 volts per micro second may cause double counting. This problem does not occur for input pulses with widths appreciably shorter or longer than 200 ns.

Input Impedance - Scaler input 400 ohms; Gate input 7.4 kohms.

Note It is recommended that in general the first decade be preceeded by the 10 MHz discriminator. (See Counting Note No. CC 3-11).

Power Requirement - 115 V AC at 0.3 A.

A picture of the front panel is shown in Fig. 1. A block diagram of the unit as a scale of 1000 is shown in Fig. 2.

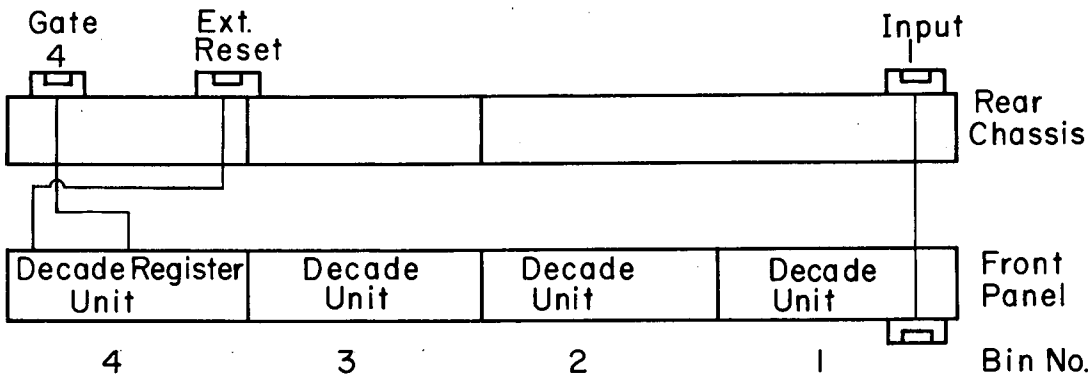

MUB-9894

Fig. 2 - Block Diagram - As a Scale of 1000

The modular construction allows for a selection of scaling units in the printed circuit bin:

a) Four decade units arranged as a scale of 10,000.
b) Three decade units arranged as a scale of 1,000 with one spare position available.
c) Four decade units arranged as two scales of 100.
d) Two decade units arranged as two scales of 10 with two spare positions available.
e) Four decade units arranged as four scales of 10.

Note

(A) A Decade-Register unit is needed to control each complete scaler.

1) The scaler input is at the first or "units" position.
2) The decade-register unit must occupy the position of the highest power of ten in any complete scaler.

(B) 1) Four scaler-input connections are available on the rear chassis, one to each bin.
2) Four gate-input connections are available on the rear chassis, one to each bin.

(C) Resetting to zero is achieved by grounding, internally or externally, the reset lead.

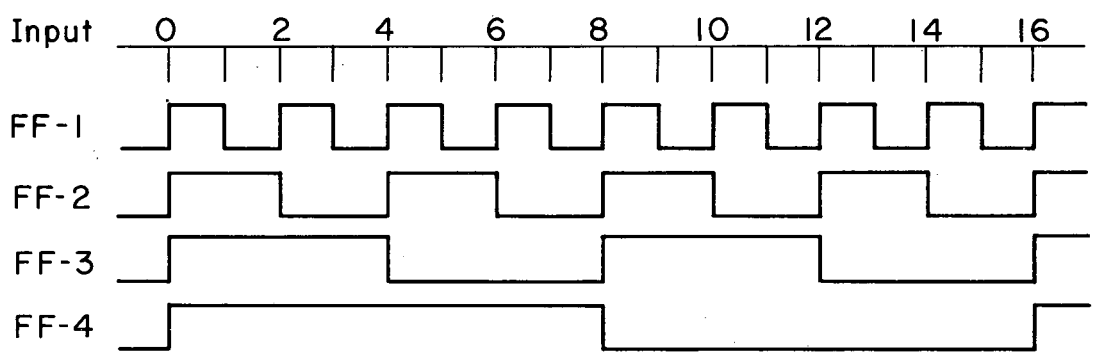

MUB-9893

Fig. 3 - Scale of Sixteen - Collector Waveforms

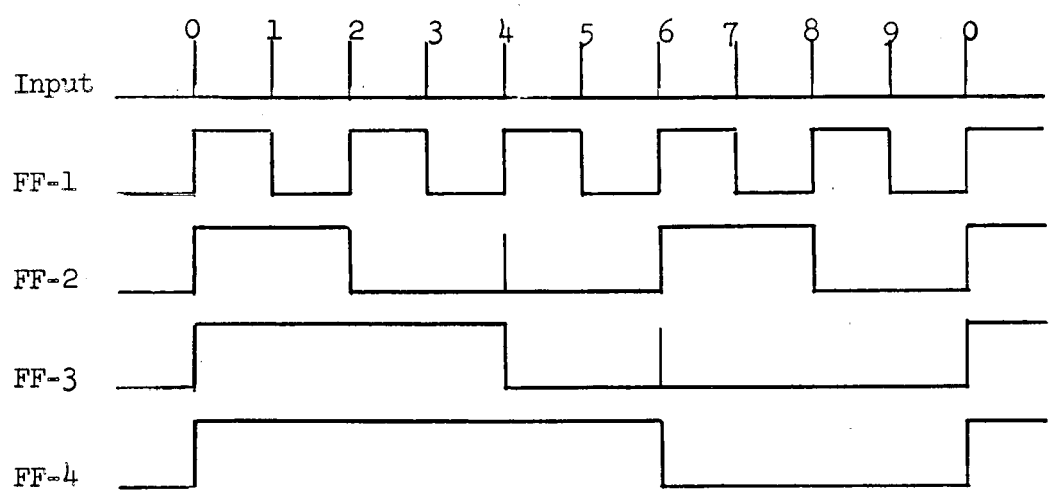

Fig. 4 - Scale of Ten - Collector Waveforms

III. CIRCUIT DESCRIPTION

1. 5-MHz Decade Unit (4X1024) The collector waveforms of a scale of sixteen are shown in Fig. 3. These are the waveforms of a scaler without feedback using four flip-flops connected in the usual binary fashion. The waveforms show that sixteen input pulses are required to obtain a complete cycle in which all the collector-waveform voltages are returned to the initial state. A scale of sixteen may be converted into a scale of ten by using feedback and then it requires only ten input pulses to obtain a complete cycle in which all the collector-waveform voltages are reverted to their initial state.

Figs. 4 and 5 show the collector waveforms and the block diagram for a scale of ten, respectively.

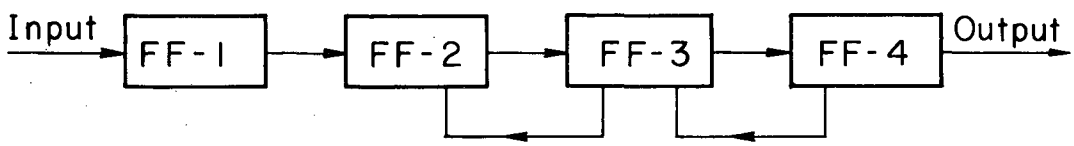

Fig. 5 - Scale of Ten - Block Diagram MUB-9895

In this unit the scale of sixteen is reduced by a count of six to a decade scale, through a feedback network, in two operations. Fig. 5 shows the block diagram of the decade scale and indicates the feedback. Referring to Fig. 4, with the fourth pulse FF-2 is reset by a pulse from FF-3 and the count is reduced by a count of 2. Then with the sixth pulse FF-3 is reset by a pulse from FF-4, and the count is further reduced by a count of 4. It may be noted that FF-2 must be reset on the fourth pulse but remain undisturbed on the sixth. On the sixth pulse FF-3 is reset before it is completely set, then after differentiation the unwanted pulse is about one-third the amplitude of the wanted pulse. A biased diode is used in the feedback network to discriminate against this small signal.

The visual readout is achieved by means of a meter which reads the sum of four currents, one from each flip-flop. The deflection of the meter is proportional to the residual count in the decade.

The electrical readout is by means of a 4-wire system (1-2-2-4 code). Each of the four flip-flop outputs from each decade is connected through a 10 kilohm resistor and brought out to a connector labeled "Scaler Print-Out."

A small hole in the front panel, in approximately the middle of the panel, allows access to a small trimming potentiometer located on the printed circuit board of each decade unit. With no power applied to the scaler, the pointer on the meter should indicate zero. If not, adjust the mechanical zero-adjust screw on the meter. On the ninth pulse, the pointer should indicate nine. If not, adjust the potentiometer.

2. Decade Register Unit (4X1034) This unit is identical with the Decade Unit except for the addition of a) the register; b) the count switch and c) the reset button.

The input to each scaling unit takes the form of a diode AND circuit. With the count switch on STOP, one diode (CR-2) is conducting and signals at the scaler input will not trigger the unit. With the switch on COUNT, the diode is rendered non-conducting, and the signals will now trigger the unit. In the GATE position, this diode is normally conducting and is rendered non-conducting with the presence of a gate signal. A zero volt signal gates the scaler off; a +4 volt signal allows the scaler to count.

The reset push button energizes the register reset coil which resets the register to zero and opens two contacts which allows the flip-flops in the scaling units to reset to zero. Provision is also made for operating the register reset coil remotely through an external reset connector located on the rear chassis.

3. Base Unit (3X9974) This unit is a 3-1/2" high type printed circuit bin and contains the permanent wiring associated with the printed-circuit connectors, and also the power supply. The power supply is located on the hinged panel at the rear of the base unit. The power supply supplies 15 volts @ 450 ma, and each decade with registers draws 75 ma, and decade without registers draw 60 ma.

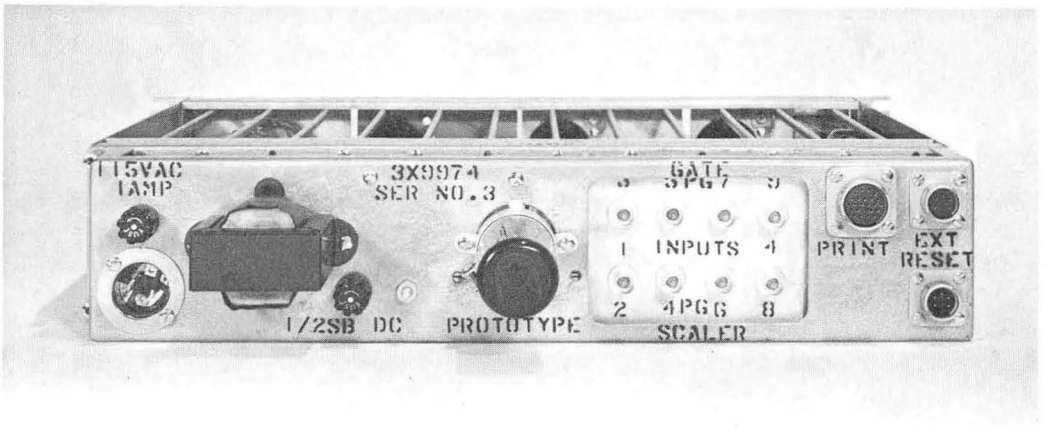

ZN-5407

Fig. 6 - Rear Panel of Base Unit

Fig. 6 shows a picture of the rear panel of the base unit. The two "EXT. RESET" connectors are paralleled so that several scalers can be reset at the same time. The "PRINT" connector contains the connections to each decade for the (1-2-2-4) code to a scaler print-out unit.

The "GATE" inputs are only connected to the decades with registers (only one gate input needed for each register unit in the bin).

The four other connectors labeled "SCALER" are the outputs of each decade.

Engineering Schematics

5-MHz Decade Scaler	4X1024
5-MHz Decade Scaler with Reg.	4X1034
Base Unit	3X9974

HGJ/mlr

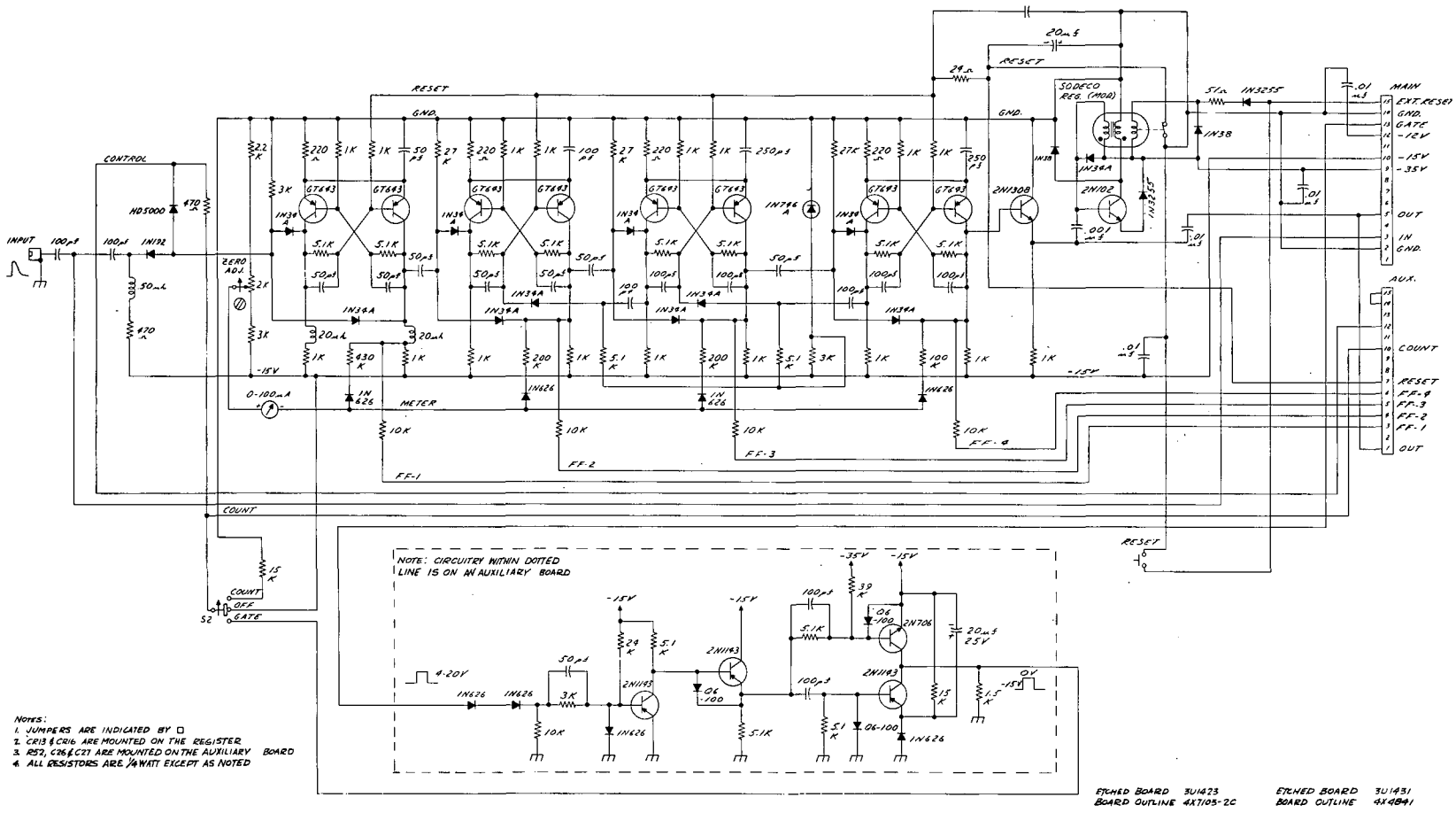

Fig. 7 - Decade Scaler Model 5 Schematic

File No. CC 9-9 (1)
January 13, 1964
H. G. Jackson

Lawrence Radiation Laboratory, University of California, Berkeley

COUNTING NOTE

REGISTER UNIT - 11X2411 P-1

I. SUMMARY

A 4-digit register is operated by a +4 V logic level applied to a monostable multivibrator. The register is reset manually or by application of a standard +4 V logic level[1] to another monostable multivibrator. A pair of relay contacts (normally closed) are operated by the reset coil. Connection to these contacts is by the rear connector.

The unit is packaged in a shielded nanobox. A size 4X box (3 x 5-1/4") is used.

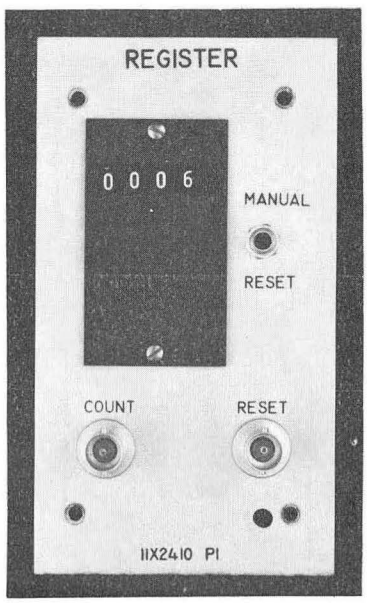

Fig. 1 - Register Unit -- Front View

II. SPECIFICATIONS

Input (Count and Reset)

Impedance	1 K Ω
"1" Level	+4 V
"0" Level	-1 V
Min. trigger width	100 ns
Max. count rate	24 pps
Relay Contacts pins	16 - 17

Power Required

+24 V	320 mA	pin 12.
+12 V	40 mA	pin 10.
-12 V	4 mA	pin 21.
Ground		pin 1.

[1] See CC 5-9 for logic voltage levels.

HGJ:mt

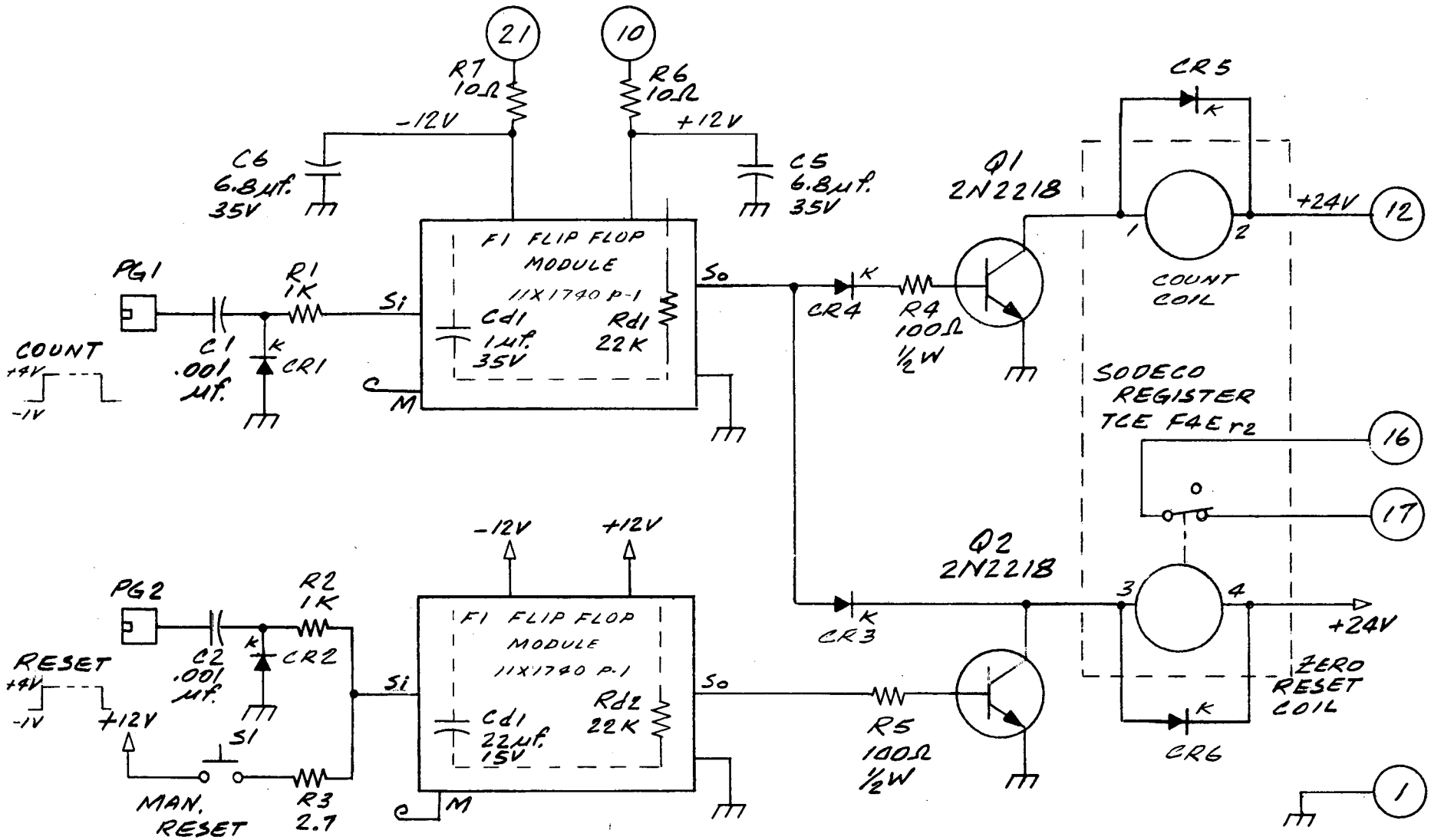

Register Unit Schematic

CC 9-10 (1)
April 2, 1964
H. G. Jackson, D. L. Wieber

Lawrence Radiation Laboratory, University of California, Berkeley

COUNTING NOTE

A DECADE SCALER AND READOUT SYSTEM

I. INTRODUCTION

A scaler system with facilities for visual, typewritten and computer oriented readout has been developed. A photograph of a small scaling assembly is shown in Fig. 1 and a rear view of a scaler is shown in Fig. 2. A typical scaler and readout system is shown in block diagram form in Fig. 3.

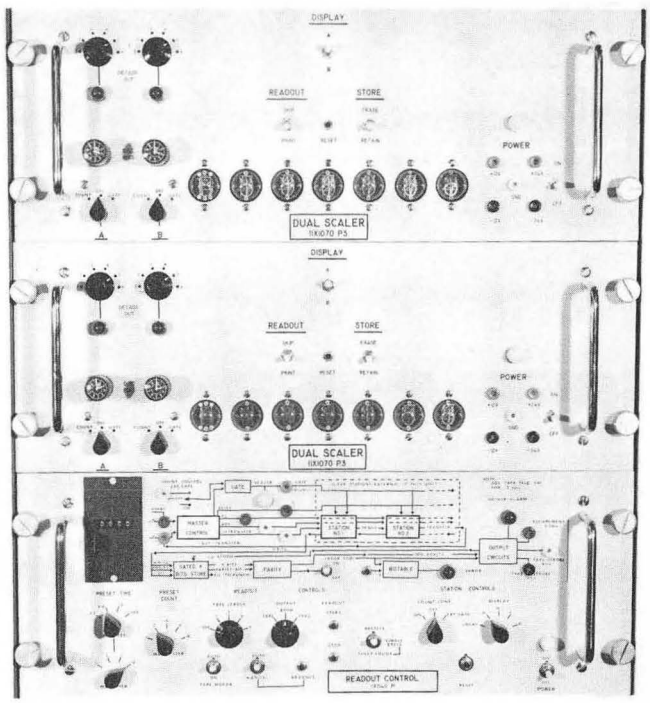

Fig. 1 - Scaling Assembly

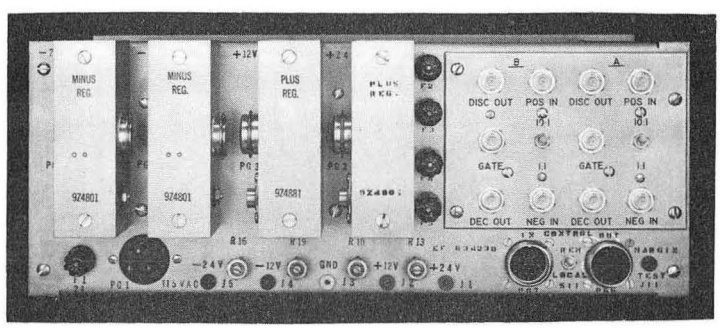

Fig. 2 - Scaler (rear view)

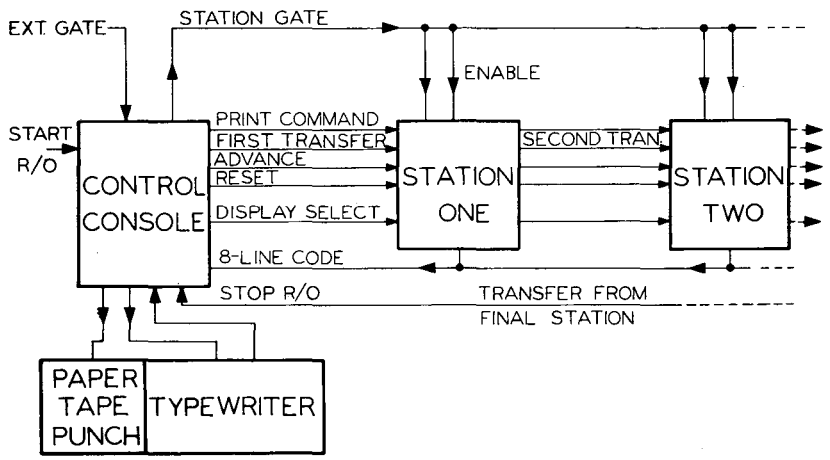

Fig. 3 - Scaler and Readout System Block Diagram

Each scaler chassis contains two six-decade scalers capable of counting pulse inputs up to a rate of 10^7 per second. Visual readout is provided by six Nixie tubes, so that contents of either scaler may be visually displayed. Each scaler has its own discriminator with a front panel sensitivity control.

The readout control console accepts binary coded decimal (BCD) information from the scalers in serial form, processes the data and records it on a typewriter and/or a paper-punch. The Control provides for remote gating, reset, and selection of display mode. It can operate on an unlimited number of scalers, since all control signals are regenerated in each scaler chassis. The control cables are connected in series between scalers. The BCD information from the decades is fed to the Control Console on 4 wires. An additional 4 wires are provided so that parity check, end of line, and alphabet codes can also be transmitted.

II. DUAL SCALER (11X1071 P-3)

A block diagram of the Dual Scaler is shown in Fig. 4.

The twelve decade cards have a common reset line. Both manual and automatic reset facilities are available. In the automatic mode, a switch allows the stored count to be either erased or retained after a Count-Readout cycle. Another switch provides for the carry output from any decade to be applied to the Decade Out connector. A light indicating that a carry output has been made.

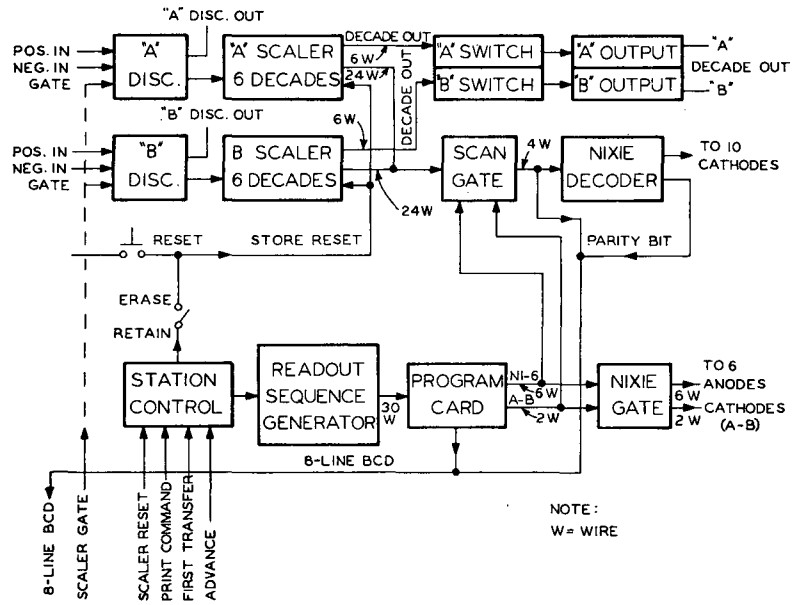

Fig. 4 - Dual Scaler Block Diagram

A. <u>Discriminator</u>

The Discriminator specifications are as follows:

Input:

Amplitude: + 0.1 to 1.1 V or - 0.2 to - 2.2 V, variable by means of a 10-turn potentiometer. A X10 attenuator switch gives a range of + 1.0 to 11 V or - 2.0 to - 22 V.

Linearity: ± 1% integral.

Threshold Stability < 0.5%/°C.

Width: 5 ns to 200 μs.

Maximum repetition rate 10^7 pulses/sec.

Impedance: 125 ohm matched.

Output:

	Scaler Input	Disc. Output
Amplitude (Into open circuit)	+ 5.0 V	+ 5.0 V
Output Impedance	82 ohm	125 ohm
Width	25 ns	25 ns (rise time < 5 ns)

A. Discriminator (Continued)

A block diagram of the discriminator is shown in Fig. 5. The tunnel diode is biased and loaded so that it remains in the high voltage state as long as the input signal exceeds the threshold, up to 200 μsec, so as to avoid double pulsing.

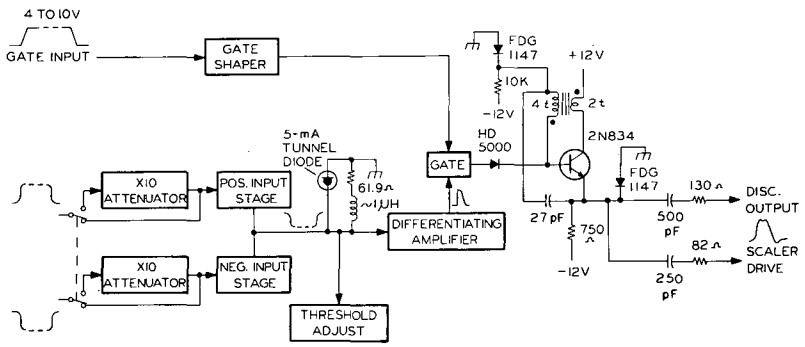

Fig. 5 - Discriminator Block Diagram

Fig. 6 shows the charge sensitivity of the discriminator. Note that at both maximum and minimum sensitivity the discriminator is essentially still voltage sensitive down to pulse width of 5 ns. This test was made with the Hewlett-Packard Pulse 215A at 100 kc.

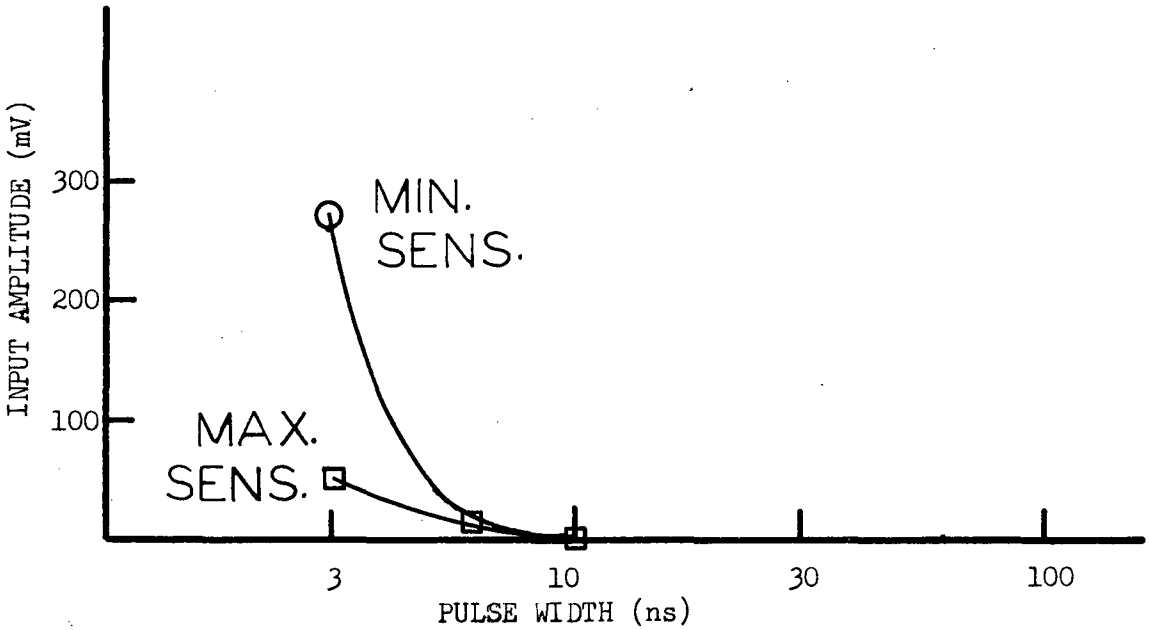

Fig. 6 - Discriminator Charge Sensitivity

A. Discriminator (Continued)

Fig. 7 shows the variation in delay time of the output signal as a function of the amount the input signal exceeds the threshold level. The threshold in this case was adjusted to 0.1 V. The test was made with the Hewlett-Packard Pulser 215A at 100 kc and 100 ns wide pulse.

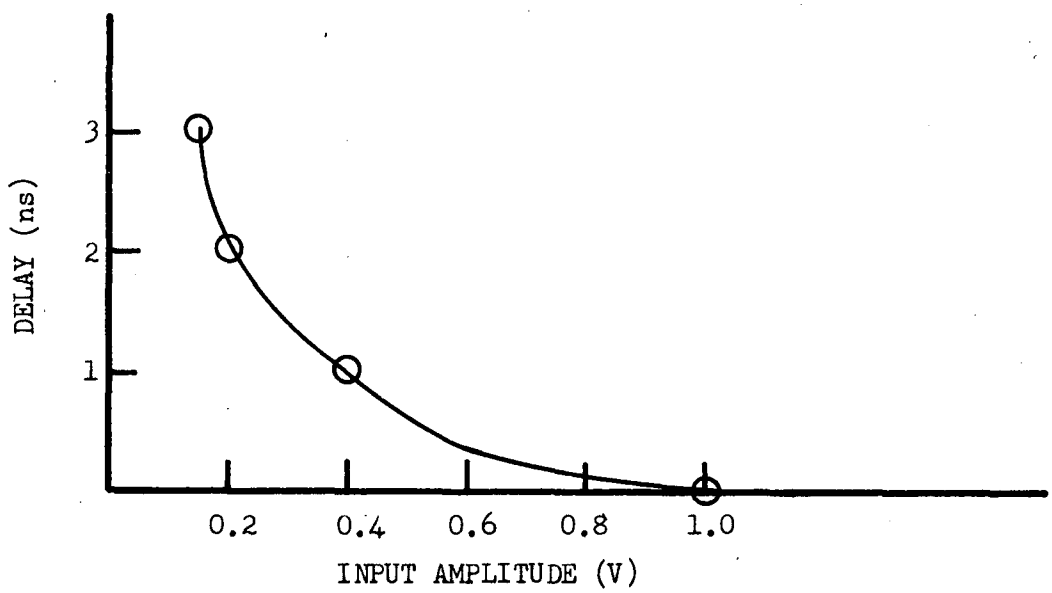

Fig. 7 - Delay Time Variation

B. Scaler Card

A schematic diagram is shown in Fig. 8. Feedback from FF-4 to the Gate allows for the natural scale of 16 to be converted to a scale of 10 with a 1-2-4-8 output code. All flip-flops are reset to zero by a common reset line. Facilities are provided for individually setting a "1" in each flip-flop.

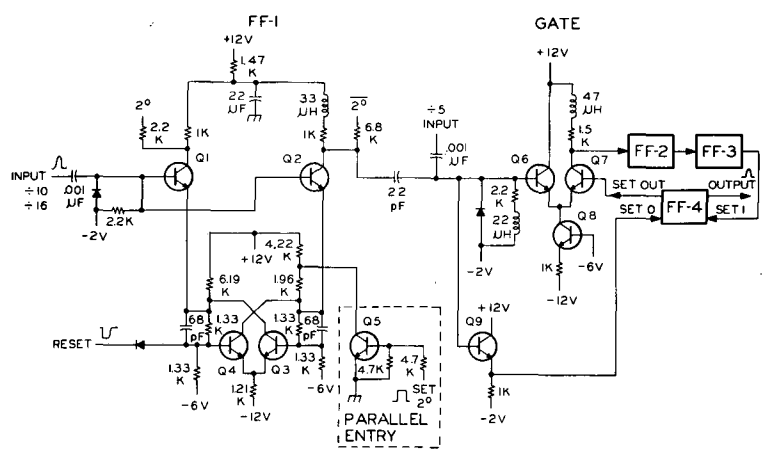

Fig. 8 - Scaler Card Schematic Diagram

C. Display and Scan Circuits.

Referring to Fig. 4; the Scan Gates are logical "AND" circuits and allow for the 4-line BCD code from each decade to be presented, in turn, to the Nixie Decoder, and also to the Central Console. Twelve such gates are used, one for each decade.

The Nixie Decoder card decodes the 4-line BCD input to a 10-line decimal output. Connection is then made to the appropriate Nixie tube cathode. Selection of a particular Nixie tube is made by gating the anode through the Nixie Gate card. By the use of diodes in the 10-line output, both odd and even parity check bits are generated on this card.

D. Program Card

The routing of the gate pulses is done through a Program Card. The program card is essentially a 30 x 30 matrix with diodes being used to route any of the 30 output positions of a Sequence Generator to any of the 30 program output lines.

Only 12 output positions are needed for decade readout, with two additional positions to identify the two scalers. This allows fixed information such as; day, run number, computer instructions, etc., to be loaded by means of diodes into the Program card in BCD code and appear on the print out along with the scaler stored count.

E. Sequence Generator and Station Control.

The source of the gate pulses in the Sequence Generator card which is a ring counter with 30 positions. Except during remote read-out, the Sequence Generator is driven by a 2 kc clock to allow continuous visual display. The clock signals are generated by the Station Control card which also contains the logical control circuits used in the automatic print out of the scaler.

III. CONTROL CONSOLE (11X1541 P-1)

As a part of the Decade Scaler and Readout System, the Control Console performs the following functions:

i) controls the scaler visual display.

ii) controls the scaler data accumulation gates, provides for preset count or preset time operation.

iii) operates through the Station Control card of each scaler to generate control logic and handle data for automatic scaler readout onto a Tally Series 420 Tape Perferator and/or an IBM Series 73 Selectric Typewriter.

A. Control Logic.

A simplified Control Console block diagram is shown in Fig. 9. The chronological sequence of events in a normal automatic read-out operation, in which both a papertape punch and a typewriter are recording is shown below.

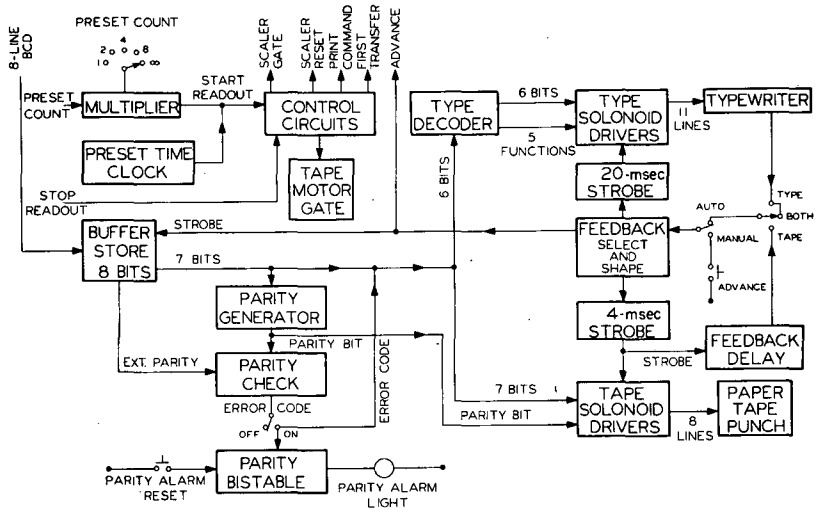

Fig. 9 - Control Console Block Diagram

i) A readout operation can be initiated by depression of a push-button or application of an electrical pulse (from preset-time or count operation).

ii) Immediately after the arrival of a Start Readout signal, the scaler data gates are disabled and the Tape Motor Gate is enabled.

iii) After a 0.2 sec delay to allow for the tape-motor starting time, a start cycle is initiated which causes a typewriter carriage-return and encodes a "Start Code" on the paper tape.

iv) Upon completion of the start cycle a Print Command is generated which acts through the Station Control card in the scalers to disable all scaler scanning circuits. Twenty μsec later a "transfer" signal from the Control Console enables the scanning circuits of the first scaler, but leaves the internal scanning oscillator disabled.

v) The information or "character" from the first scanned position of the first scaler is recorded and an "advance" signal then steps the scanner to its next position.

vi) When the last character in a scaler station has been inspected, the scanning circuitry in that station is again disabled and a transfer signal is passed to the next station.

vii) The transfer signal from the last scaler will normally stop the readout operation.

A. Control Logic (Continued)

Several options are available for the Stop-Readout cycle. In each case, completion of this cycle leaves the scaler data gates and visual scanning enabled and the tape motor turned off.

i) A tape leader can be generated automatically, the length determined by a Tape Leader switch.

ii) Scaler data gates can be enabled automatically at the end of the readout operation or left disabled until enabled manually by depression of a momentary-on toggle switch. The mode is selected by a front panel switch.

iii) A safety feature is included which will end the readout operation if all information lines show logic "0's" for more than 10 consecutive readout cycles.

B. Data Handling.

Referring to the block diagram, Fig. 9, the 8 input information lines are fed through a Buffer Store, inspected by the Parity Control, and then routed to the tape-punch and typewriter decoding and driving block.

The Buffer Store consists of 8 gated flip-flops, which store the 8 line input information during a 1 μsec interval at the start of each cycle. Seven outputs from the Buffer Store are inspected by the Parity Control which generates a parity bit to be punched on the paper tape. This parity bit is also compared with an externally generated parity bit from the scaler. A discrepency will result in the recording of an Error Code and the lighting of a Parity Alarm light, if the Error Code switch is in the ON position.

A failure in the driver circuits of the readout recorder solonoids is indicated by the Driver Alarm.

HGJ:DLW:mt

File No. CC 9-11 (1)
February 15, 1966
H. G. Jackson

Lawrence Radiation Laboratory, University of California, Berkeley

COUNTING NOTE

100-MHz DECADE SCALER - 18X1101 P-2

I. SUMMARY

A 100-MHz Decade Scaler has been packaged in a Nuclear Instrument Module. A Size 1X (1.35 x 8.75" panel) is used. Visual readout is by 1-2-4-8 incandescent lights. Electrical readout is also made available in the 1-2-4-8 BCD. The input is 50 Ω, and the carry output is at 125 Ω. It has been shaped for feeding directly to the 10-MHz Decade 11X1081 P-3.

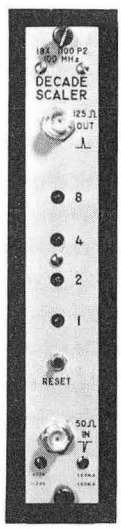

Fig. 1 - Front Panel View of Scaler

II. SPECIFICATIONS

Input	
Min. Amplitude	-200 mV (internally adjustable to -500 mV).
Min. Width	2 ns.
Impedance	50 Ω.
Max. Repetition Rate	10^8 pulses/sec.
Output	
Amplitude	+3.5 V into 125 Ω (+7 into open circuit).
Width	20 ns (risetime <10 ns).
Visual Readout	filamentary lamps (1-2-4-8).
Electrical Readout	1-2-4-8 BCD, at standard 4 V logic level.[1] "1" pin 20. "4" pin 22. "2" pin 21. "8" pin 23.
Reset to Zero	manual by front panel push-button. electrical a) at standard 4 V logic level,[1] pin 35. b) by grounding line, pin 37.
Power Required	
+12 V 160 mA	pin 16.
-24 V 160 mA	pin 29.
Ground	pin 34.

III. CIRCUIT DESCRIPTION

A simplified schematic diagram is shown in Fig. 2. A simple dc-coupled amplitude discriminator at the input allows for maximum sensitivity and still discriminates against noise. It also allows for pulse shaping independent of input pulse shape. Following the tunnel-diode discriminator the pulse is shaped, amplified and fed to the first binary.

The binary circuit follows the design of V. Radeka.[2] A tunnel diode is used to switch the common-base transistors on and off. Steering diodes at the input obtain their bias from the transistor collectors. The fast-carry output from the binary is shaped and amplified before being fed to the second binary which is similar to the first. A slow output is also taken from each binary to drive the indicating light and the electrical readout lines.

The decade output is from a blocking-oscillator circuit triggered by the fourth binary.

[1] See CC 5-9 for logic voltage levels.
[2] V. Radeka. A Tunnel Diode and Common-Base Transistor Complementary Bistable., Nuclear Inst. Method 2 123.

HGJ/mlr

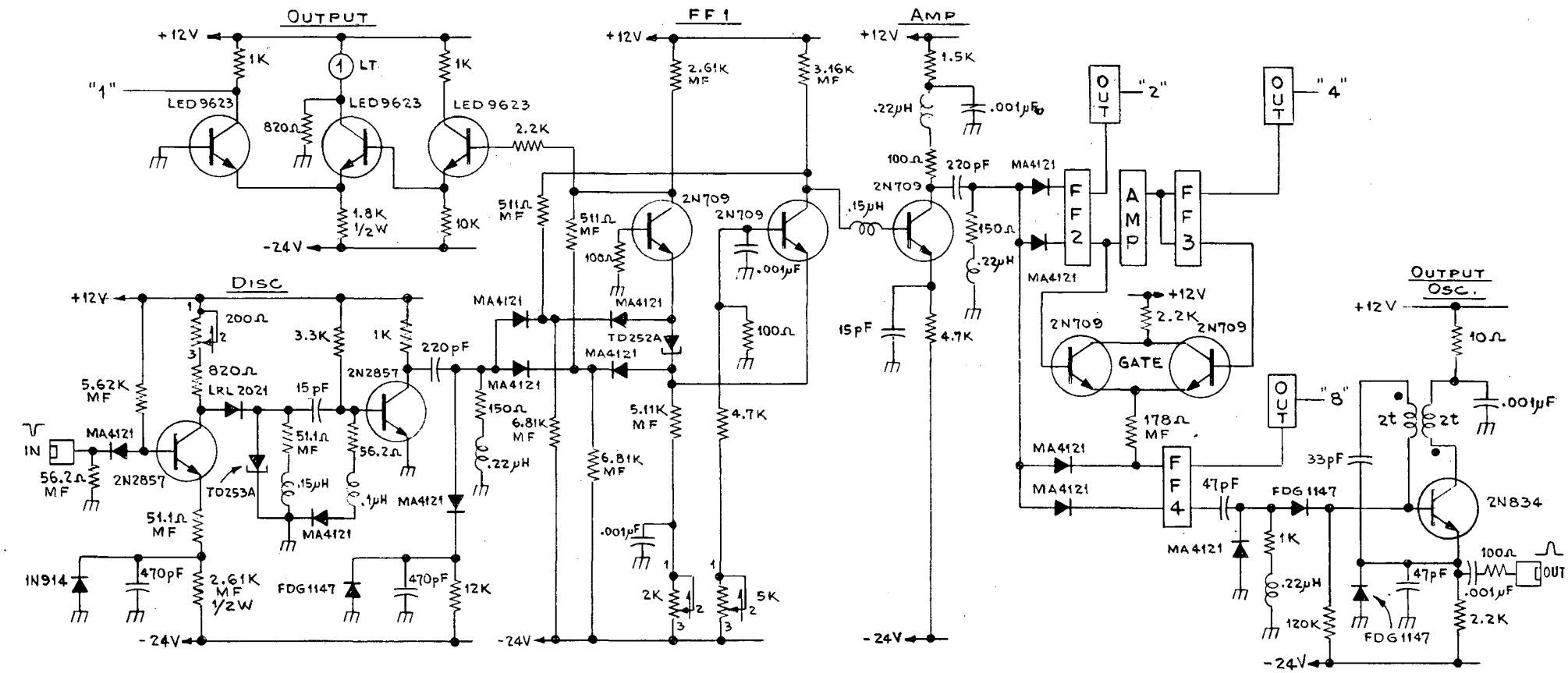

LED 9623 OR 2N706
FDG1147 OR 1N904
LRL 2021 OR hpa 2005

Fig. 2 - Schematic Scaler Diagram

COUNTING NOTE

Jan. 10, 1959
G.C. Cox

GENERATORS OF FAST-RISING ELECTRICAL PULSES

ABSTRACT: Two UCRL mercury-capsule electrical-pulse generators are described which provide rectangular pulses with a 10 to 90% rise time of less than 5×10^{-10} seconds at a repetition rate of 60 per second, one per second or single pulse.

The first generator Fig. 3, called the "Black Box Mercury Pulser", Dwg. No. 4V 4333, has been in use at UCRL since 1955.[1] It has been re-packaged, resulting in Model 1X 6693, Fig. 2. This second version conveniently mounts in the Tektronix 517 "scope" cart, and is available with an output impedance of 52 ohms or 125 ohms. These pulse generators are useful in measurements of transient response in the 10^{-9} second region.

CHARACTERISTICS COMMON TO BOTH GENERATORS: Rectangular pulses of either polarity with a rise time of less than 5×10^{-10} seconds are generated by closing the contacts of a mercury-capsule switch,[2] connecting the center conductors of two coaxial transmission lines which are charged to different voltages.[3] One, called the charging line, which has an impedance of 52 ohms, is usually a length of RG8/U. The center conductor of the charging line returns to a voltage source through a 51K ohm charging resistor. When the switch closes, a pulse is obtained across the terminated output whose width is twice the transit time of the charging line. The pulse amplitude is one half the voltage that is across the switch prior to closing.

The generators have a charging voltage supply which is adjustable from zero to 200V, thus the pulse amplitude is adjustable from zero to 100V. The pulse amplitude is correctly indicated by the dial setting if the output is terminated. If the output lines are not terminated, the output pulse amplitude then does not agree with the dial setting.

The pulse width depends upon the length of cable connected to the "Charging Line" connector. The minimum pulse width obtainable is determined by the transit time of charging line included internally between the switch contacts and the "charging line" connector. This is 0.19 millimicroseconds for the "Black Box Pulser" and 0.245 millimicrseconds for 1X 6693. Thus the pulse width is 2 (L + 0.19) millimicroseconds and 2 (L + 0.245) millimicroseconds for the two pulsers respectively, where L is the transit time of the charging cable used, in millimicroseconds.[4] For long pulses, i.e., a microsecond or more, the charging line voltage, which rises on an RC time constant equal to 51K X the charging line capacitance, may reach significantly less than the supply voltage. In this case, the actual pulse height will be somewhat below that indicated on the dial. The difference depends on the "open time" of the mercury switch. "Open times" for the two types of pulsers and for the various rep. rates are given in Table I.

1. Val Fish, Jr., A Coaxial Mercury Relay for Fast Pulse Generation, UCRL 3062, July 1955.
2. C.P. Clare and Co., Type RP-5480 (same as used in Clare Type HG 1003 relays).
3. Lewis and Wells, Millimicrosecond Pulse Techniques, McGraw-Hill Co., 1954, Page 100.
4. Counting Note, File No. CC5-6, Page 2.

TABLE I

OPEN TIMES - Length of time available for re-charging the charging line preceding each pulse.

	60 Per Second	1 Per Second	Single Pulse
"Black Box Pulser	10 Milliseconds	40 Milliseconds	Open Until The Button is Pressed
Pulser 1X 6693	5 Milliseconds	2 Milliseconds	2 Milliseconds

A trigger output is available which is isolated from the main coaxial path and is sufficiently energetic to trigger the sweep circuits of the Tektronix 517. See Fig. 4 and 5.

Fig. 6 shows the output of a mercury capsule pulse generator connected to the vertical plates of the 5XP11 CRT. This CRT limits the rise time to about one millimicrosecond; also, the pulse has traveled through about 100 millimicroseconds (65 ft.) of RG8/U, slowing the rise and causing the top of the pulse to slope[5] which would otherwise be "flat-topped". This length is used to give the sweep circuits of the 517 "scope", time to start the trace.

The generators operate in an upright position. If tilted sufficiently, the switch becomes bridged by the contained mercury.

MODEL 1X 6693: The pulse generator Model 1X 6693, Fig. 1 and 2, has four features not found in the "Black Box Mercury Pulse Generator".

(1) With the case removed as seen in Fig. 2, the instrument will mount in the Tektronix "Scope Mobile" which carries the 517 oscilloscope.

(2) The pulse amplitude control has been decaded to allow vernier control of the lower pulse heights.

(3) The capsule enclosure has been redesigned. Two enclosures are available, with 52 ohm or 125 ohm outputs, Fig. 1 and 2 respectively. They are interchangeable. Fig. 2 shows the 125 ohm pulser with an extra capsule enclosure. There are two 125 ohm outputs. If only one output is needed the other should be terminated to absorb the pulse energy which goes down the unused coaxial path.

(4) The mercury capsule switch utilizes the "normally closed" set of contacts. Thus a cycle of operation starts with the contacts closed. The contacts open after current flows in the driving coil, during which time the charging line voltage builds up. The contacts then close, producing the output pulse. When the generator is used in "single pulse" operation the normally closed condition results in a newly-generated mercury surface on the contacts just prior to closing, hence, a more repeatable output pulse, regardless of the time between pulses.

5. Counting Note, File No. CC2-1.

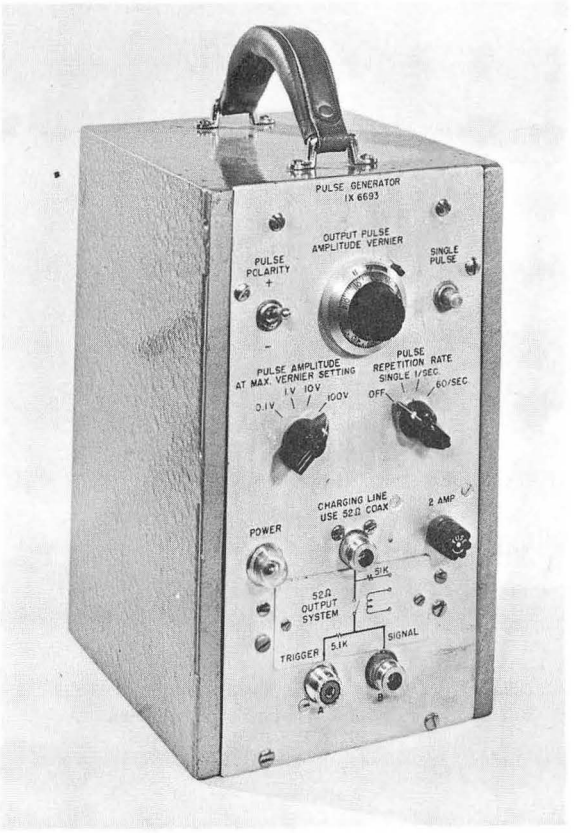

Fig. 1 Model 1X6693 with 52 ohm output.

Fig. 2 Model 1X6693 with 125 ohm output and an extra capsule enclosure

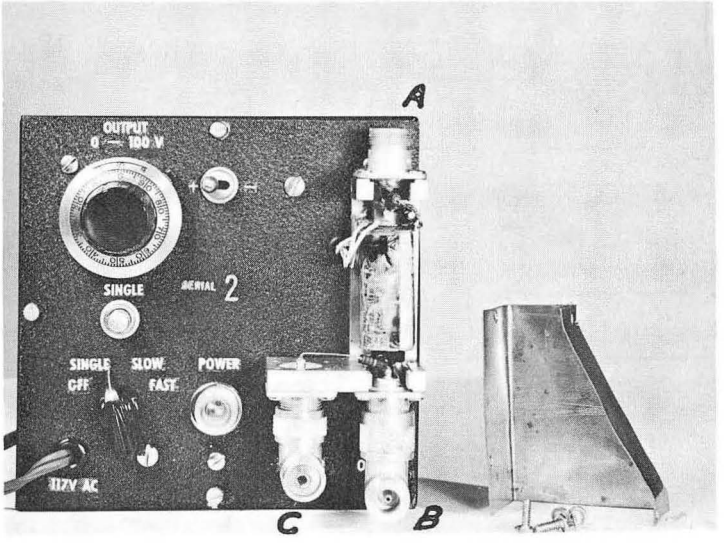

Fig. 3 "Black Box Mercury Pulser"

A- Charging cable connector

B- Output

C- Trigger output

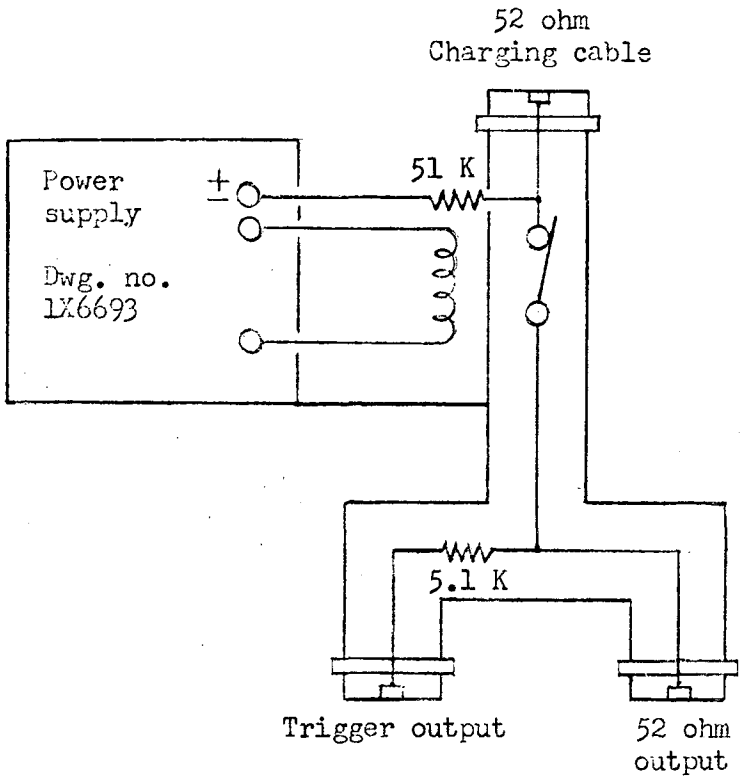

Fig. 4 52 ohm capsule enclosure for Model 1X6693.

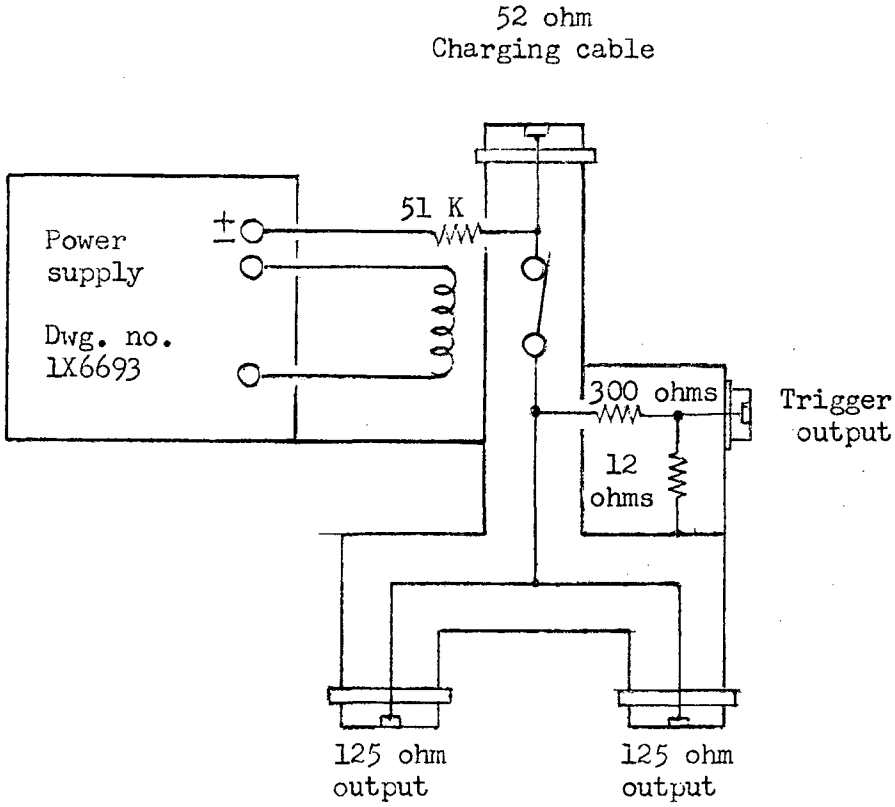

Fig. 5 125 ohm capsule enclosure for Model 1X6693.

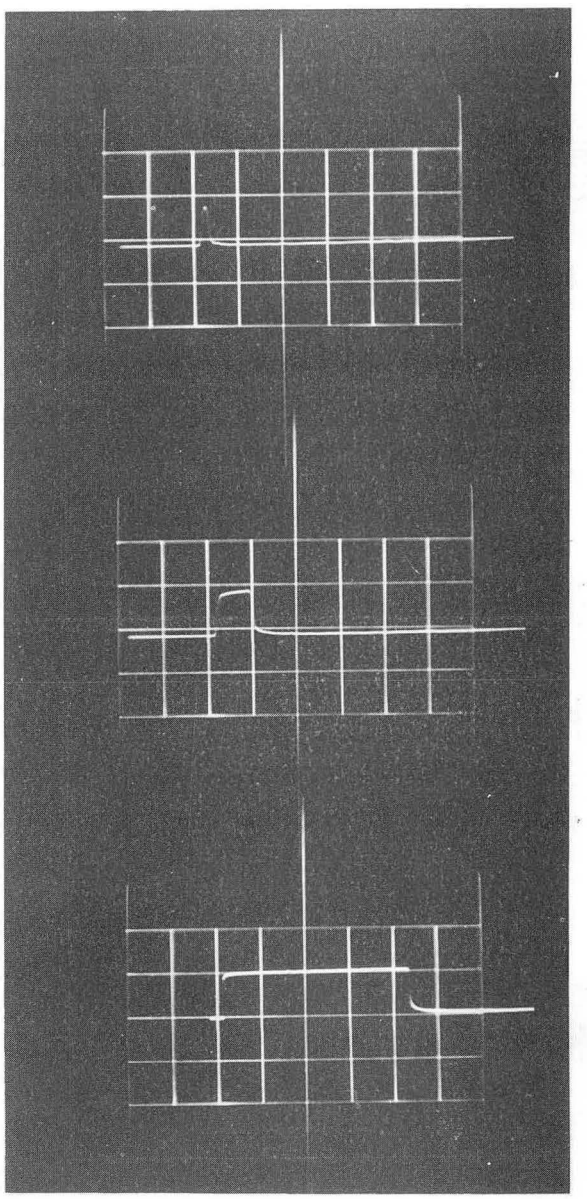

Sweep Speed	Length of RG8/U charging cable used.
10 musec./cm.	6 inches
10 musec./cm.	30 inches
20 musec./cm.	27 feet

Fig. 6 Waveforms from a "Mercury Capsule Pulse Generator".

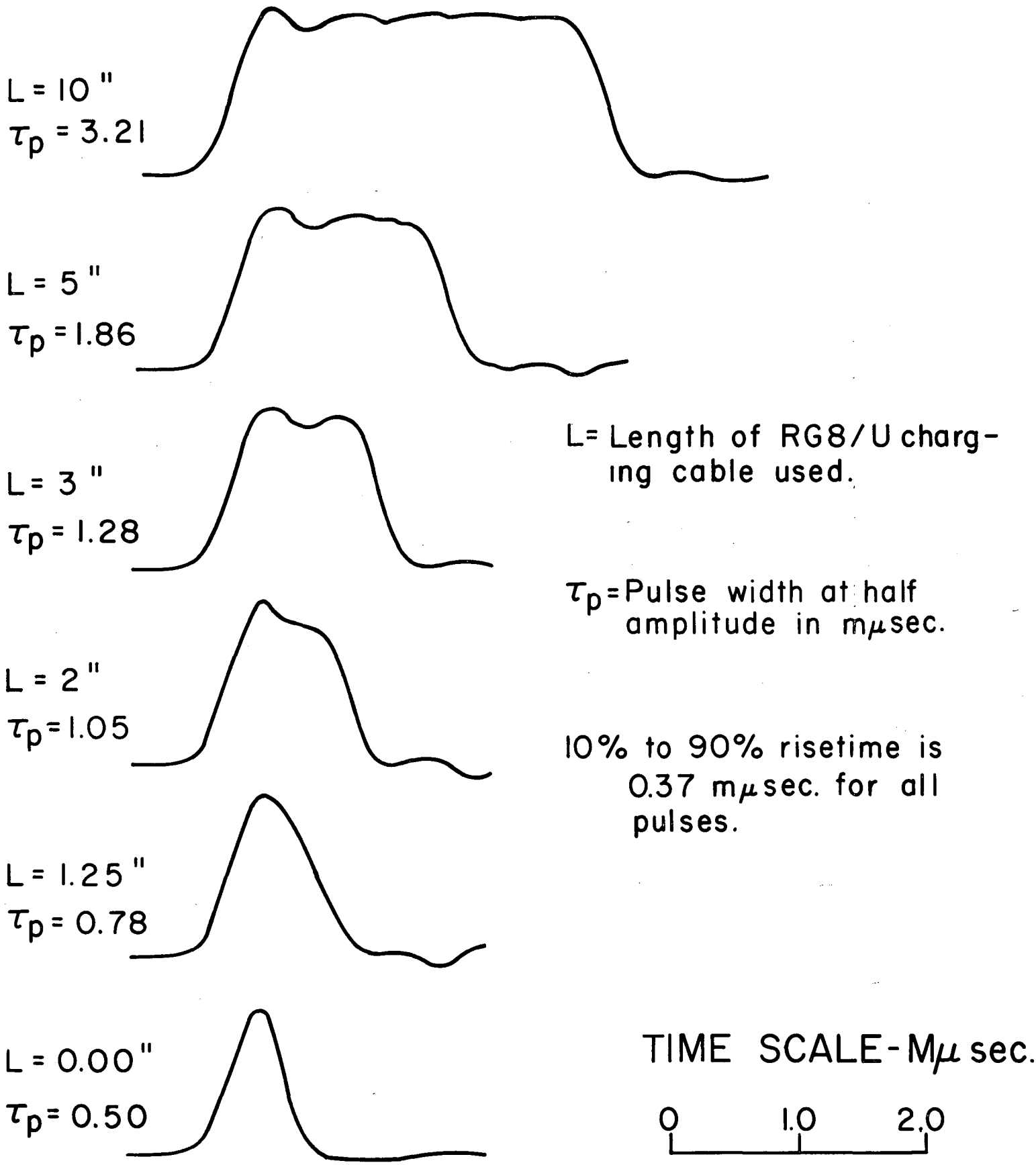

Fig. 6a Waveforms from a "Mercury Capsule Pulse Generator."

55,222-1

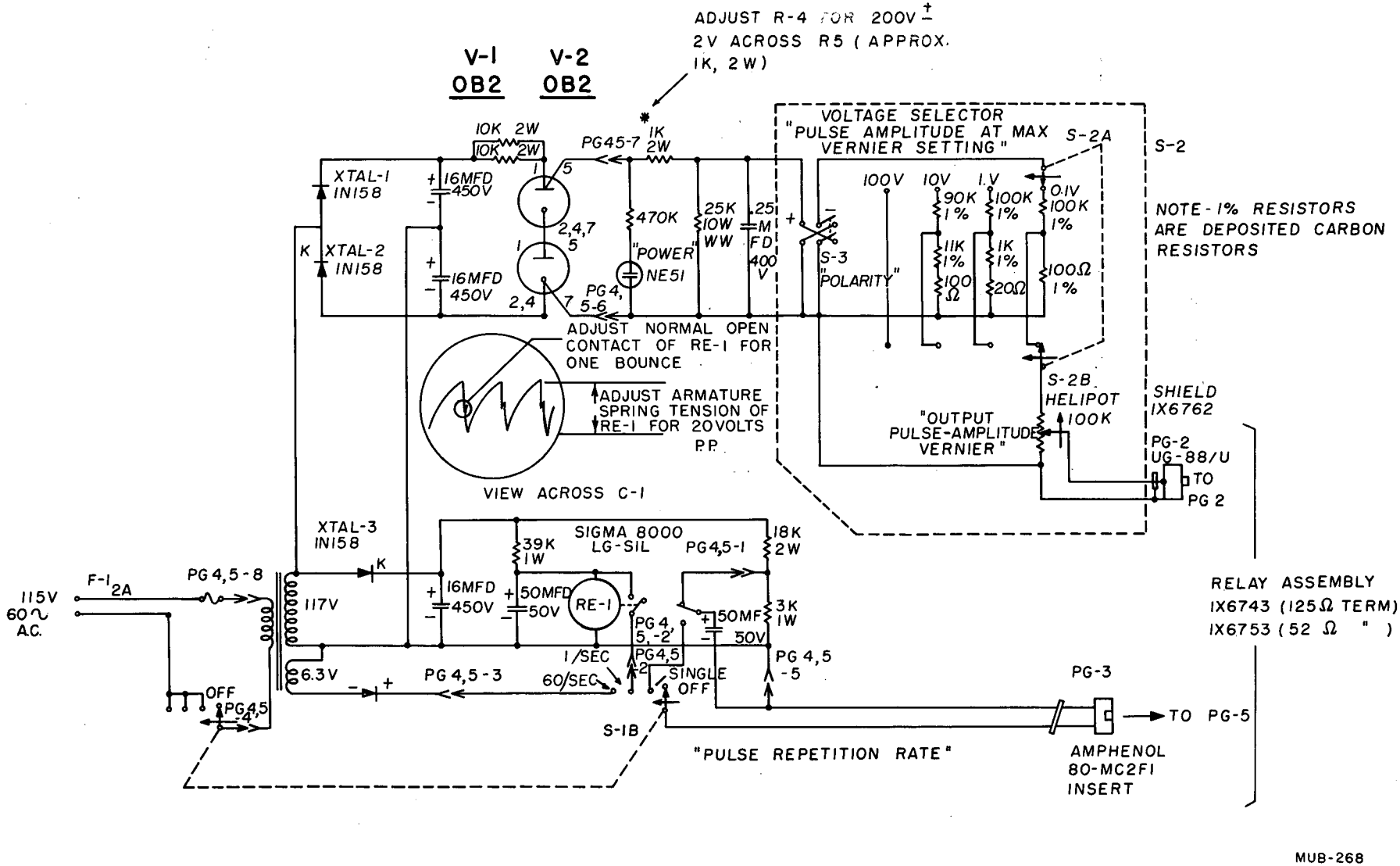

Fig. 7. Pulse Generator IX6693. Power Supply Circuit Diagram.

COUNTING NOTE

NANOSECOND PULSE GENERATOR

ABSTRACT: The Nanosecond Pulse Generator is an instrument designed primarily for testing counting equipment. Equipment requiring narrow input pulses of fast rise time at high repetition rates may be tested with this generator. Three output channels (coincident in time) are available. The output pulses are negative in polarity, 0 - 12 volts amplitude with a rise time of less than 2.5 nanoseconds, (10^{-9} seconds) and pulse widths adjustable from 2.5 to 25 nanoseconds. The generator output may be controlled by single pulse operation, an external source, or by means of an internal generator. The internal generator is capable of repetition rates of 10 cps to 10 Mc. Provisions for gating the instrument allow bursts of pulses simulating operation with pulsed accelerators. Its high repetition rate capabilities make the instrument useful for checking equipment for such items as repetition rate sensitivity, base line shift, and pile up.

SPECIFICATIONS:

Repetition rate	
Internal	10 cps to 10 Mc
External	10cps to 10 Mc (sine wave Input) 0 to 10^7 pulses per sec (pulse input)
Rise time:	less than 2.5 nanoseconds

Output pulse into terminated 125 ohm cable (3 channels independently adjustable for the following):

Negative output pulse:	0 to 12 volts
Pulse widths (by external clipping lines)	2.5 to 25 nanoseconds
Trigger output:	20 volts positive, 50 nanoseconds wide
Gate Input (gated operation)	0 volt to close gate, +20 volt to open gate.
External drive input:	Positive pulse greater than 5 volts. Sine wave input, see Fig. 1.
Power requirements:	117 volts ac, approximately 200 watts
Weight:	Approximately 40 lbs.

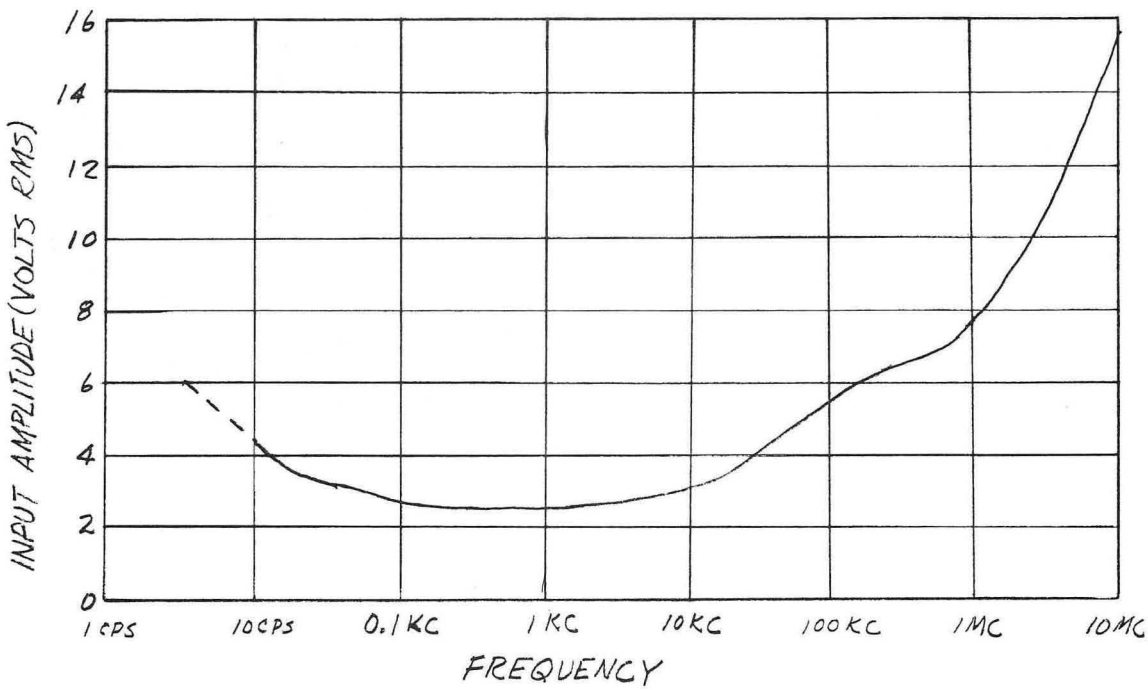

Fig. 1 - External Drive Input Requirements for Sine-Wave Input Signal Vs. Frequency.

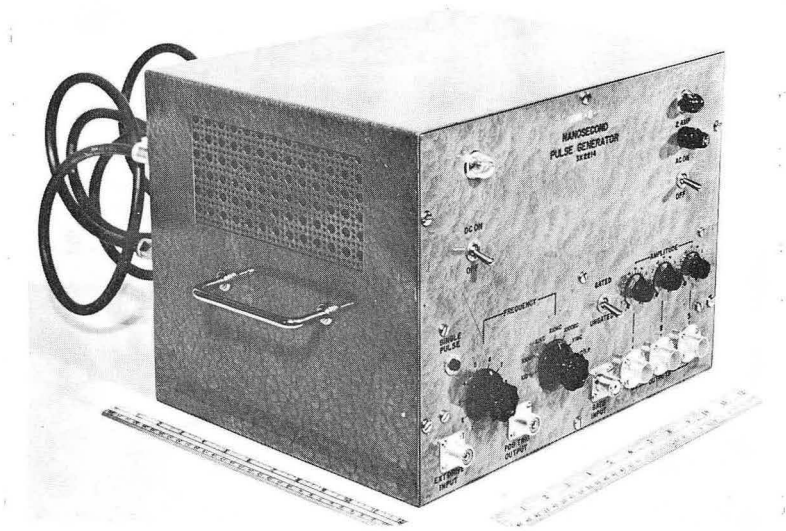

Fig. 2- Pulse Generator

OPERATING INSTRUCTIONS: The Nanosecond Pulse Generator is equipped with both an AC and a DC power switch. When the generator is not in immediate use, the ac power may be left on to maintain the filaments at operating temperature. See Fig. 2.

The functions of the controls and connectors is explained below:

Frequency: The coarse frequency is selected by a 7 position switch on which the lower frequency limit is indicated. The uncalibrated fine frequency control multiplied by this lower frequency limit gives the approximate repetition rate of the internal generator. The fine frequency control gives an over-lapping frequency control over the six decade positions on the coarse frequency range switch. When the coarse frequency control is in the "Ext./S.P." position, the output pulse is controlled by either the Single Pulse push button or the External Drive Input Signal.

Single Pulse: This push button allows single pulse operation when the coarse frequency range switch is in the "Ext./S.P." position.

External Drive Input: When the coarse frequency range switch is in the "Ext./S.P." position, positive pulses of at least 5 volts amplitude will trigger the instrument at any repetition rate up to 10 Mc. If sine wave input is used for the external drive input signal, the input amplitude required to trigger the instrument will vary as indicated in Fig. 1.

Positive Trigger Output: A positive 20 volt pulse, 50 nanoseconds wide precedes the output pulse by approximately 10 nanoseconds for initiating timing or triggering an oscilloscope.

Gate - Ungated Switch: In the "ungated" position, the gate allows all pulses (external, single pulse, and internal) through. In the "gated" position a positive 20 volt signal at the "Gate Input" connector is required to open the gate allowing pulses through. A gate signal of 0 volt will close the gate.

Gate Input: In the "gated" position a positive 20 volt signal will open the gate and allow pulses through. A gate signal of 0 volt will close the gate. Because the input signal is direct-coupled to the gate, the length of the gate signal may be any desired length. There is no provision within the instrument to synchronize the gate signal with the internal generator. Turn-on and turn-off times of the gate are less than 0.1 microsecond for a step function input. Fig. 3 shows some 10 Mc bursts of pulses obtainable when the gating feature is used in conjunction with the internal generator.

Outputs: Three outputs are available based on the same source but independently variable in pulse amplitude and pulse width. The pulse width is controlled by external clipping at the rear of the instrument. The output amplitudes are controlled at the front panel. The output pulse rise time is less than 2.5 nanoseconds and pulse widths are adjustable from 2.5 to 25 nanoseconds. The output pulse is variable from 0 to 12 volts negative when terminated into 125 ohm cable. Because of the use of clipping lines (or shorting stubs) to control the output pulse widths, there is no reverse terminating resistor; therefore, it is mandatory that the load present a constant 125 ohm impedance to the generator if spurious signals caused by reflections are to be eliminated.

Output Amplitide: These controls adjust the output amplitude of each of the three output channels independently from 0 to 12 volts negative when terminated in 125 ohms. Fig. 4 shows the range of output amplitudes available.

Shorting Stubs (at rear of instrument): The output pulse widths of the three output channels are controlled independently by the insertion of the proper length of shorting stub (or clipping line) in each of the three channels. The shorting stub must be 125 ohm cable, such as RG63/U. The output pulse width may be determined by calculating the double transit time for signals in the cable. The average velocity of propagation in RG63/U is 9.9 inches per nanosecond. Fig. 5 shows the range in pulse widths available.

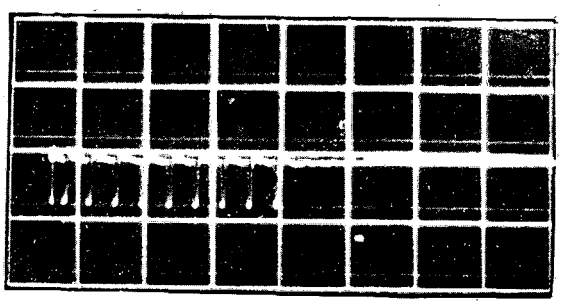

(A)

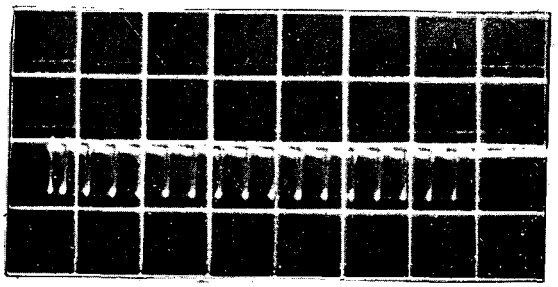

(B)

Fig. 3 - Bursts of 10 Mc pulses obtained when gating feature is used (vertical sensitivity = 16 v/cm; horizontal sweep = 0.25 usec/cm)

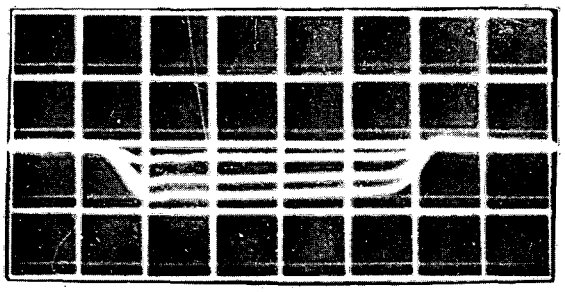

Fig. 4 - Output pulse amplitude variations using multiple exposures. (Vertical sensitivity = 16 v/cm, horizontal sweep = 5 nsec/cm)

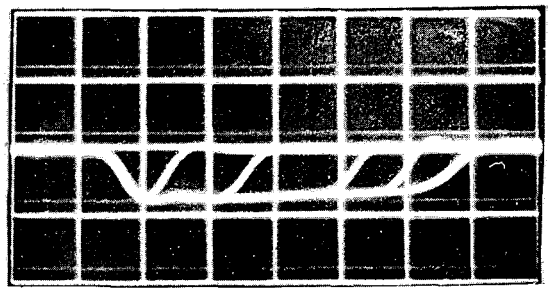

Fig. 5 - Output pulse width variations using multiplie exposures. (vertical sensitivity = 16 v/cm; horizontal sweep = 5 nsec/cm)

CIRCUIT DESCRIPTION: A simplified block diagram of the instrument is shown in Fig. 6. The tubes associated with each function are indicated. The power supply in the instrument is omitted from the block diagram for simplicity. The schematic circuit diagram number 3X 2214 may be referred to for more detail.

The Single Pulse and External Drive Input signals trigger a Square Wave Generator (V1, V2 and V3A) when the coarse frequency range switch is in the "Ext./S.P." position. In this switch position the Square Wave Generator is a monostable multivibrator whose pulse width and frequency are determined by the External Drive Input

signal or Single Pulse. The External Drive Input may be either positive pulses or sine wave signals. The triggering level of the monostable multivibrator varies with sine wave input signal frequency. Fig. 1 shows the triggering level required as a function of the frequency of the sine wave input. Input pulse requirement is a positive pulse greater than 5 volts.

In the remaining six positions of the coarse frequency range switch, the Square Wave Generator is an astable multivibrator whose coarse frequency is determined by RC timing networks. The fine frequency adjustment returns the grid resistor to a variable potential that controls the frequency over a 10 to 1 range for any selected coarse frequency range switch position.

The Gate (V3B) employs a cathode follower coupling the differentiated signal from the Square Wave Generator to the first amplifier V4. When the Gate switch is in the "ungated" position, the cathode follower biases V4 just beyond cut-off. In this "ungated" position the signals from the Square Wave Generator are sufficient to bring V4 into conduction. When the Gate switch is in the "gated" position, V4 is biased well beyond cut-off and signals from the Square Wave Generator are insufficient to bring the grid of V4 into conduction. A positive 20 volt signal to the Gate (V3B) is required to bring the grid of V4 to a bias level such that signals from the Square Wave Generator are sufficient to bring V4 into conduction.

The amplifiers V5 through V7 are each biased beyond cut-off and are driven into conduction by the signal. Signal inversion between amplifier stages is accomplished by pulse transformers. The signal drives each amplifier stage into conduction from cut-off, progressively steepening the rise time of the signal.

The "Positive Trigger Output" signal is taken from the grid of V5 and isolated from the amplifier stages by V14 which is an output pulse amplifier with pulse transformer output.

Output amplifiers V9, V11, and V13 are fed from the same source and driven into conduction from cut-off. The output amplitude of each amplifier is determined by its plate and screen voltages. Tubes V8, V10 and V12 are cathode followers that control the plate and screen voltages of V9, V11, and V13, respectively. The potentials of the cathode follower are controlled by the potentiometer settings adjustable at the front panel. These potentiometer controls are labelled "Amplitude" for the respective output channels.

The output pulse widths are determined by the length of 125 ohm cable inserted between PG-8 and -11; PG-9 and -12; and PG-10 and -13 for output channels 1, 2, and 3 respectively. If RG63/U is used for the shorting stub (or clipping line), the output pulse width will be equal to

$$P.W. = 2L / 9.9$$

where P.W. = the output pulse width in nanoseconds,

L = the length of the shorting stub in inches measured from external ends of connectors,

9.9 = the average velocity of signal propagation in RG63/U in inches per nanosecond.

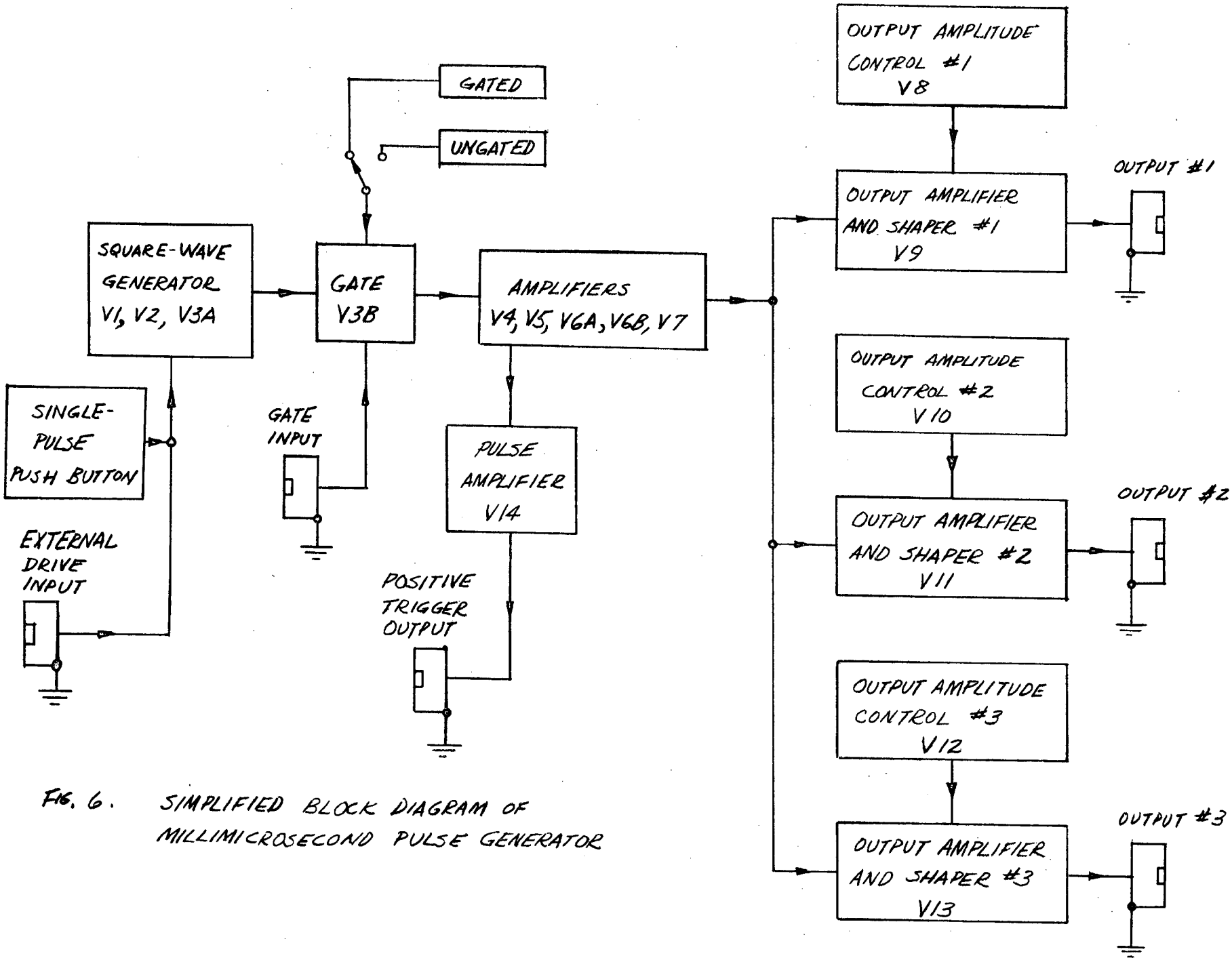

FIG. 6. SIMPLIFIED BLOCK DIAGRAM OF MILLIMICROSECOND PULSE GENERATOR

The output pulse must be terminated in 125 ohm cable if spurious signals caused by reflections in the output system are to be eliminated. These reflections could be serious where systems employ amplifiers and limiters in which the reflected signal may cause undesired operation.

SUMMARY: The Nanosecond Pulse Generator is an instrument designed primarily for testing counting equipment such as scalers, discriminators, coincidence units, and entire systems employing various pieces of counting equipment. The three-channel output of the instrument with variable repetition rate, independently adjustable output widths and amplitude, coupled with a gating feature make the instrument useful for simulating signals from experimental set-ups with pulsed accelerators. The narrow pulses with fast rise times simulate signals obtained from photomultiplier tubes. The specifications of the instrument will suggest many other uses for the instrument.

Inverting and coupling transformers described in CC2-4 may be used in conjunction with the generator to obtain positive pulses and to couple the signal from the generator into systems employing other impedance levels.

REFERENCE: UCRL Drawing 3X 2214.

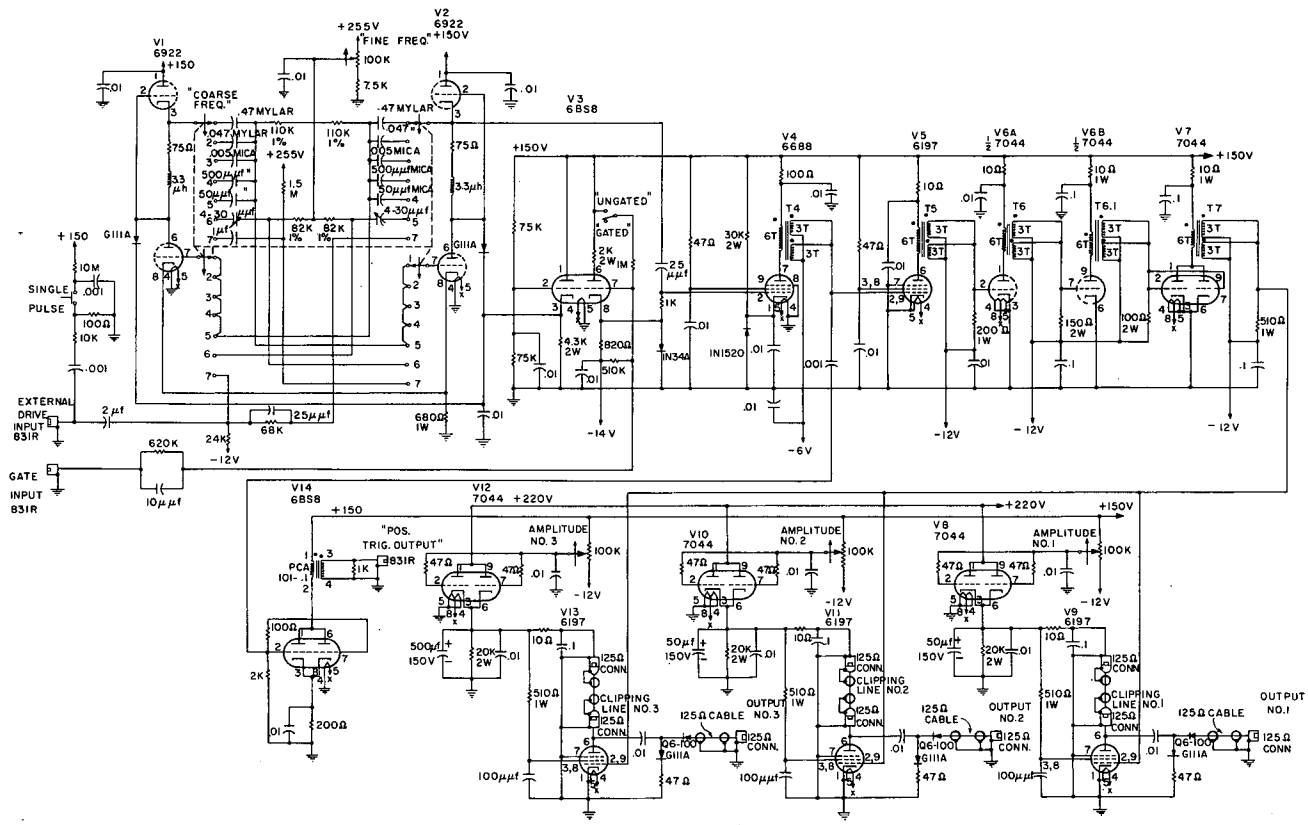

Fig. 7. Pulser Circuit Diagram.

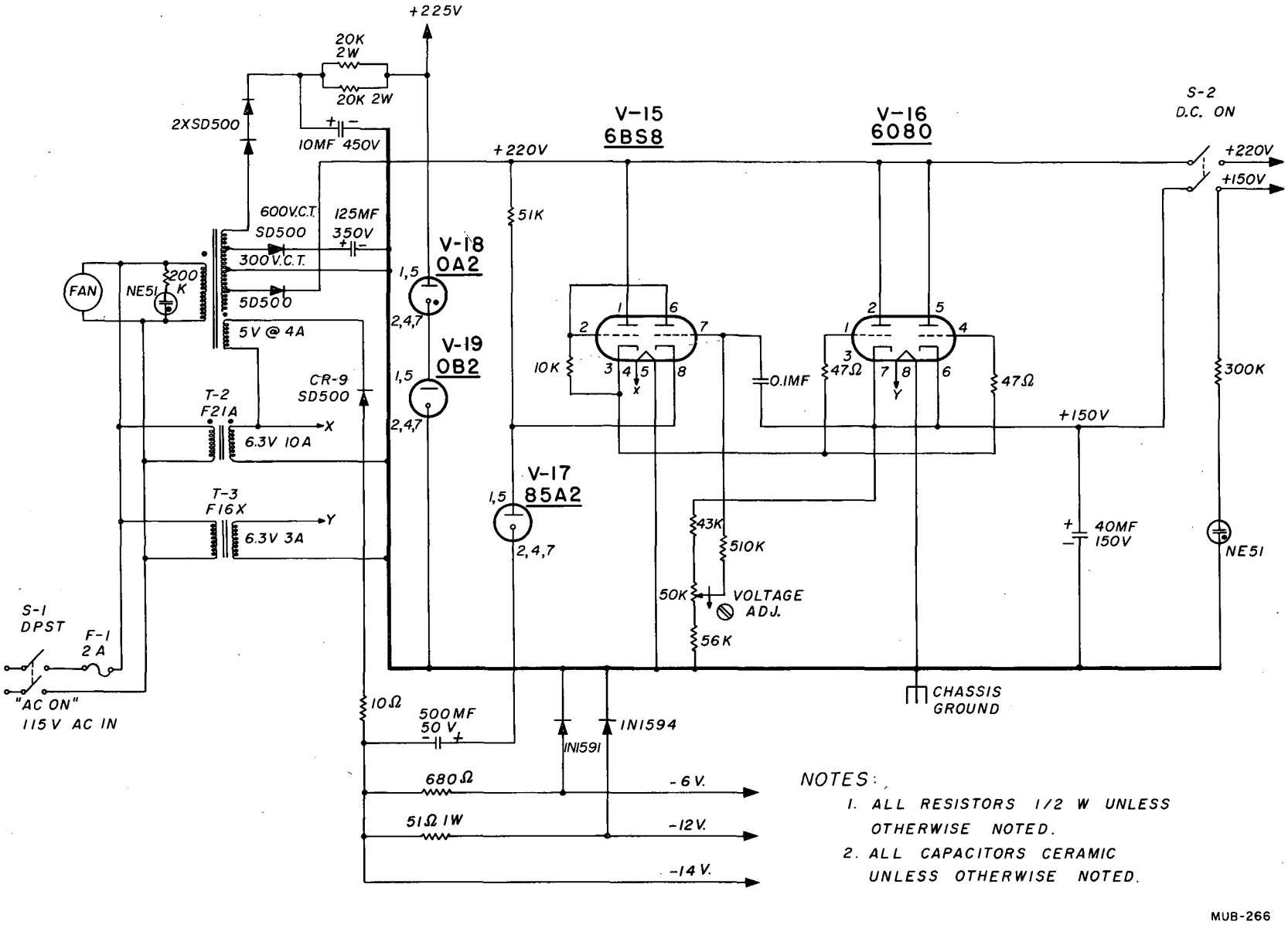

Fig. 8. Power Supply Circuit Diagram.

March 15, 1961
Designed by
M. Nakamura
Note by T. Lawson

COUNTING NOTE

GATED PULSE GENERATOR

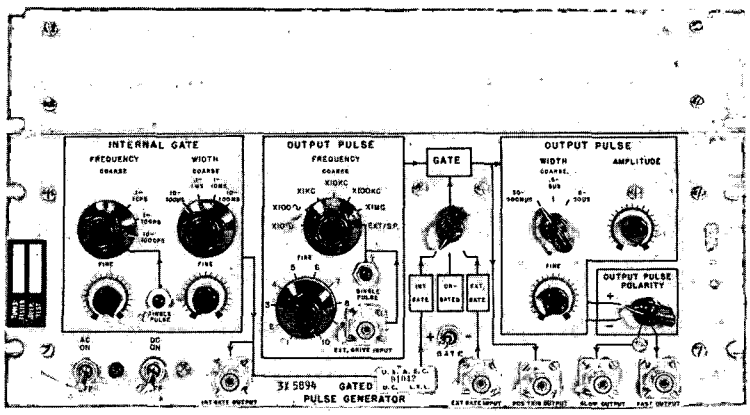

Fig. 1 - Gated Pulse Generator

ABSTRACT: The Gated Pulse Generator is designed primarily for testing counting equipment. Its high repetition rate makes it useful for checking equipment for such things as repetition-rate sensitivity, base-line shift, and pile up. Internal or external gating provide bursts of pulses simulating operation with pulsed accelerators. The instrument includes the following features:

(1) An output-pulse generator with a frequency range from 10 cps to 10 Mc.
(2) A gate generator with a frequency range from .1 to 100 cps.
(3) Single pulsing of either of these two generators.
(4) External drive of the output-pulse generator.
(5) A fast output, positive or negative, with a rise time of 25 to 50 ns.
(6) A slow output, positive or negative, with a rise time of .6 μs.
(7) A variable amplitude control for the fast and slow outputs.
(8) Variable pulse-width controls for the output pulse and for the gate pulse.
(9) Internal or external gating of the output pulse.
(10) Selection of either on-gate or off-gate operation.
(11) Internal gate output for gating other equipment.
(12) Positive trigger output.

SPECIFICATIONS:

Output-pulse generator:
Frequency: 10 cps to 10 Mc.
Fast output:
Amplitude, no load, 1 Mc: ± 16V, .5 μs wide.
10 Mc: + 16V (17V peak-to-peak), 50 ns wide.
- 10V (12V peak-to-peak), 50 ns wide.
125 ohm load, 1 Mc: + 8V, .5 μs wide.
- 6V, .5 μs wide.
10 Mc: + 6V (8V peak-to-peak), 50 ns wide.
- 4V (6V peak-to-peak), 50 ns wide.

Rise time, positive output: 25 ns.
negative output: 50 ns.
Width: 50 ns to 50 μs.

Slow output:
Amplitude, no load, 10 Kc: + 44V, 3 μs wide.
- 38V, 3 μs wide.
100 Kc: + 47V (56V peak-to-peak), 3 μs wide, down 40% at 500 Kc.
- 40V (47V peak-to-peak), 3 μs wide, down 50% at 500 Kc.
125 ohm load, 10 Kc: + 18V, 3 μs wide.
- 5V, 3 μs wide.
100 Kc: + 14V (16V peak-to-peak), 2.5 μs wide, down 50% at 500 Kc.
- 5V (7V peak-to-peak), 3.5 μs wide, down 60% at 500 Kc.

Rise time, positive or negative output: .6 μs.
Width: Useful range from 1 to 50 μs.

Internal-gate output:
Frequency: .1 to 100 cps.
Width: 10 μs to 100 ms.
Rise time: .15 μs.
Fall time: .4 μs.
DC levels: Gate on: + 20 volts.
Gate off: zero volts.
"+" gate: + 20 volts during gate pulse.
"-" gate: zero volts during gate pulse.
Duty factor: 80%.

External-gate input:
Amplitude: + 18 volts minimum to turn on gate.
Turn-on and turn-off time: .2 μs.

External-drive input: Same as Nanosecond Pulse Generator, Counting Note CC10-3.

Trigger output: Positive, 50 ns wide. Amplitude: 15 volts at 100 Kc; down 50% at 1 Mc.

Power requirements: 117 volts ac; approximately 220 watts.

Weight: Approximately 30 lbs.

OPERATING INSTRUCTIONS: The Gated Pulse Generator is equipped with both an ac and dc power switch. When the generator is not in immediate use, the ac power may be left on to maintain the filaments at operating temperature.

The functions of the controls and connectors are explained below. Refer to the photograph of the instrument panel, Fig. 1.

Output-Pulse Frequency (Fast Output or Slow Output): The coarse frequency is selected in six ranges, each of which indicates its lower-frequency limit: X 10 cycles, X 100 cycles, X 1 Kc, X 10 Kc, X 100 Kc, and X 1 Mc. The reading on an uncalibrated fine-frequency control, numbered from 1 to 10, is multiplied by this lower-frequency limit to give the approximate repetition rate of the internal generator. The fine-frequency control gives an overlapping frequency control over the six decade positions on the coarse-frequency switch. When the coarse-frequency control is in the "Ext/SP" position, the output pulse is controlled by either the single-pulse push button or the External-Drive Input signal.

Output-Pulse Width (Fast Output or Slow Output): The coarse pulse-width is selected in three ranges: 50 to 500 ns, .5 to 5 μs, and 5 to 50 μs. An overlapping control of these ranges is given by an uncalibrated fine pulse-width control. Whenever the Slow Output is used, it is necessary to select the wider pulse-widths, on account of the slower rise time of the pulse.

Output Pulse Amplitude (Fast Output or Slow Output): This uncalibrated control varies the amplitude of both the fast and slow output pulses from zero to maximum.

Output-Pulse Polarity (Fast Output or Slow Output): Positive or negative polarity of the output pulse may be selected with this two-position switch.

Fast Output: This output provides a pulse with a rise time of 25 ns for a positive pulse and 50 ns for a negative pulse. In Fig. 2(A) and Fig. 2(B) multiple exposures show the maximum pulse amplitudes with positive and negative output; and with no load (the larger amplitude) and 125 ohm load (the smaller amplitude). The zero-volt base line indicates the amount of base-line shift. At 1 Mc the output-pulse width control is arbitrarily set for a pulse width of approximately .5 μs with no load. It remains at this setting with 125 ohm load. At 10 Mc the width control is at its minimum setting (50 ns).

Slow Output: This output provides a pulse with a rise time of approximately .6 μs, positive or negative. In Fig. 2(C) and Fig. 2(D) multiple exposures show the maximum pulse amplitudes with positive and negative output; and with no load (the larger amplitude) and 125 ohm load (the smaller amplitude). The zero-volt base line indicates the amount of base-line shift. At each frequency, 10 Kc and 100 Kc, the output-pulse width control is arbitrarily set for a pulse width of approximately 3 μs with no load. It remains at this setting with 125 ohm load.

Internal-Gate Frequency: The coarse frequency is selected in three ranges: .1 to 1 cps, 1 to 10 cps, and 10 to 100 cps. An overlapping control of these ranges is given by an uncalibrated fine-frequency control. When the coarse-frequency control is in the single-pulse position, the gate pulse is controlled by the single-pulse push button.

Internal-Gate Width: The coarse internal-gate width is selected in four ranges: 10 to 100 μs, .1 to 1 ms, 1 to 10 ms, and 10 to 100 ms. An overlapping control of these ranges is given by an uncalibrated fine gate-width control.

Single Pulse: Each of two push buttons, one for the output-pulse generator, and the other for the internal-gate generator, allow single-pulse operation when the corresponding coarse-frequency range switch is in the single-pulse position.

Gate-Function Switch: When the gate is "on", it permits pulses to pass through from the output-pulse generator to the output circuit. When it is "off", it blocks these pulses. When the Gate-Function Switch is in the "Internal Gate" position, the width and repetition rate of the gate pulse are determined by the settings of the internal-gate width and frequency controls. When the Function Switch is in the "Ungated" position, the gate allows all pulses to pass through. In the "External Gate" position, a positive pulse of 18 volts minimum at the External-Gate Input connector is required to turn on the gate.

Gate-Polarity Switch: On-gate or off-gate operation may be selected with this two-position switch. In the "+" position, the gate is on during the gate pulse. In the "-" position, the gate is off during the gate pulse.

Internal-Gate Out: This connector provides a gate pulse from the internal-gate generator for gating other equipment. When the gate is on, the dc level is positive 20 volts. When the gate is off, the dc level is zero volts. When the Gate-Polarity Switch is in the "+" position, the dc level is positive 20 volts during the gate pulse. When the Gate-Polarity Switch is in the "-" position, the dc level is zero volts during the gate pulse.

External-Gate In: In the "External Gate" position of the Gate-Function Switch, a positive pulse of 18 volts minimum at this connector will turn on the gate. Because the input signal is direct coupled to the gate, the length of the gate signal may be any desired length. There is no provision within the instrument for synchronizing the gate signal with the internal output-pulse generator. Turn-on and turn-off times of the gate are approximately .2 μs for a step-function input.

External-Drive In: A positive signal at this connector will trigger the output-pulse generator when the output-pulse coarse-frequency range switch is in the "Ext/SP" position. Specifications for this input are the same as for the Nanosecond Pulse Generator in Counting Note CC10-3.

Positive-Trigger Out: This output provides a positive pulse for initiating timing or triggering an oscilloscope. Its amplitude is positive 15 volts at 100 Kc; down 50% at 1 Mc. Its width is 50 ns. It precedes the output pulse by 30 ns at the lowest frequency and by 10 ns at the highest frequency.

CIRCUIT DESCRIPTION: See Fig. 3 and Fig. 4 for a schematic circuit diagram. The power supply and some details have been omitted for simplicity. For the complete schematic circuit diagram, refer to print number 3X 5894.

The single-pulse and external-drive signals trigger a square-wave generator (V1 and V2) when the output-pulse coarse-frequency range switch is in the "Ext/SP" position. In this position the square-wave generator is a monostable multivibrator, whose pulse width and frequency are determined by the External-Drive Input, or single-pulse signal. In the remaining six positions of the coarse-frequency range switch, the square-wave generator is an astable multivibrator, whose coarse frequency is determined by the RC timing network. The fine-frequency adjustment returns the grid resistor to a variable potential that controls the frequency over a 10 to 1 range for any position of the coarse-frequency range switch.

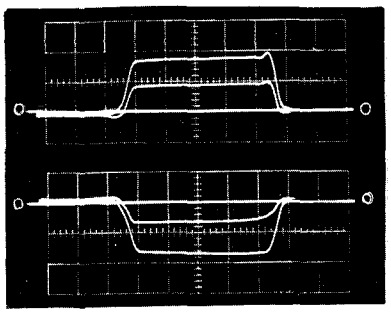

(A) Fast output at 1 Mc.
Top: positive output.
Bottom: negative output.
(Vertical sensitivity = 10 volts/cm; horizontal sweep = .1 μsec/cm).

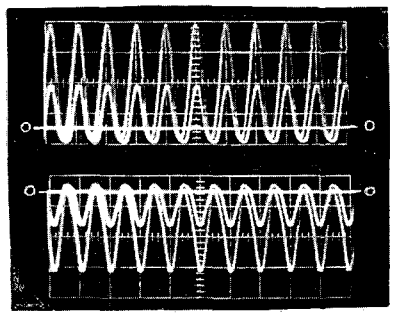

(B) Fast output at 10 Mc.
Top: positive output.
Bottom: negative output.
Minimum width control setting. (Vertical sensitivity = 5 volts/cm; horizontal sweep = .1 μsec/cm).

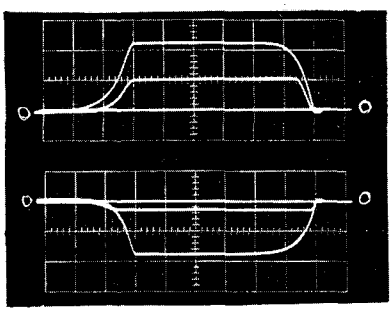

(C) Slow output at 10 Kc.
Top: positive output.
Bottom: negative output.
(Vertical sensitivity = 20 volts/cm; horizontal sweep = .5 μsec/cm).

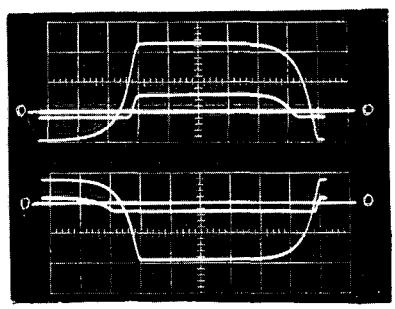

(D) Slow output at 100 Kc.
Top: positive output.
Bottom: negative output.
(Vertical sensitivity = 20 volts/cm; horizontal sweep = .5 μsec/cm).

Fig. 2 - Output pulses. In each photograph, multiple exposures superimpose the following three conditions: no load (the larger amplitude), 125 ohm load (the smaller amplitude), and the zero-volt base line.

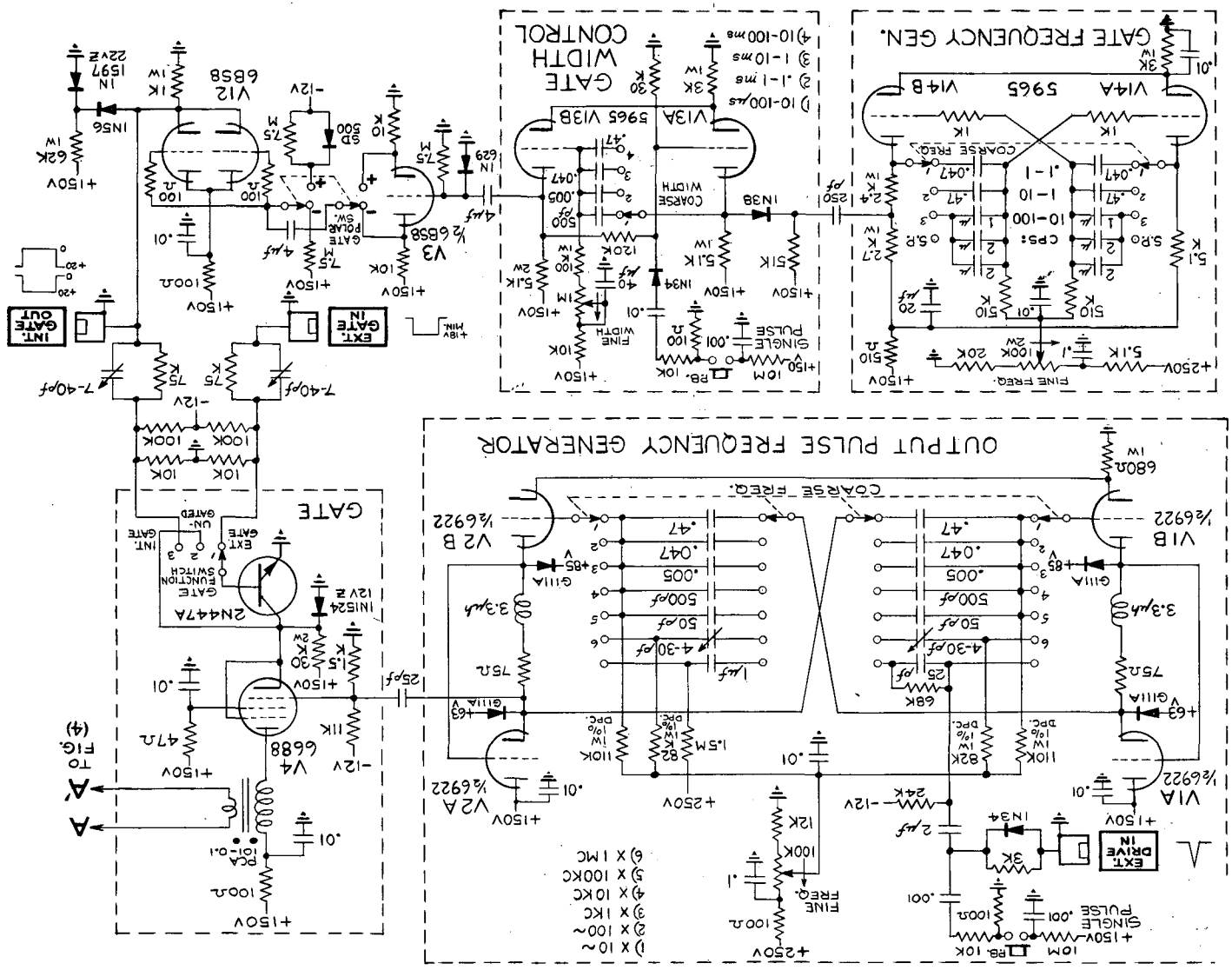

Fig. 3 - Circuit Diagram of the Gated Pulse Generator - Part 1

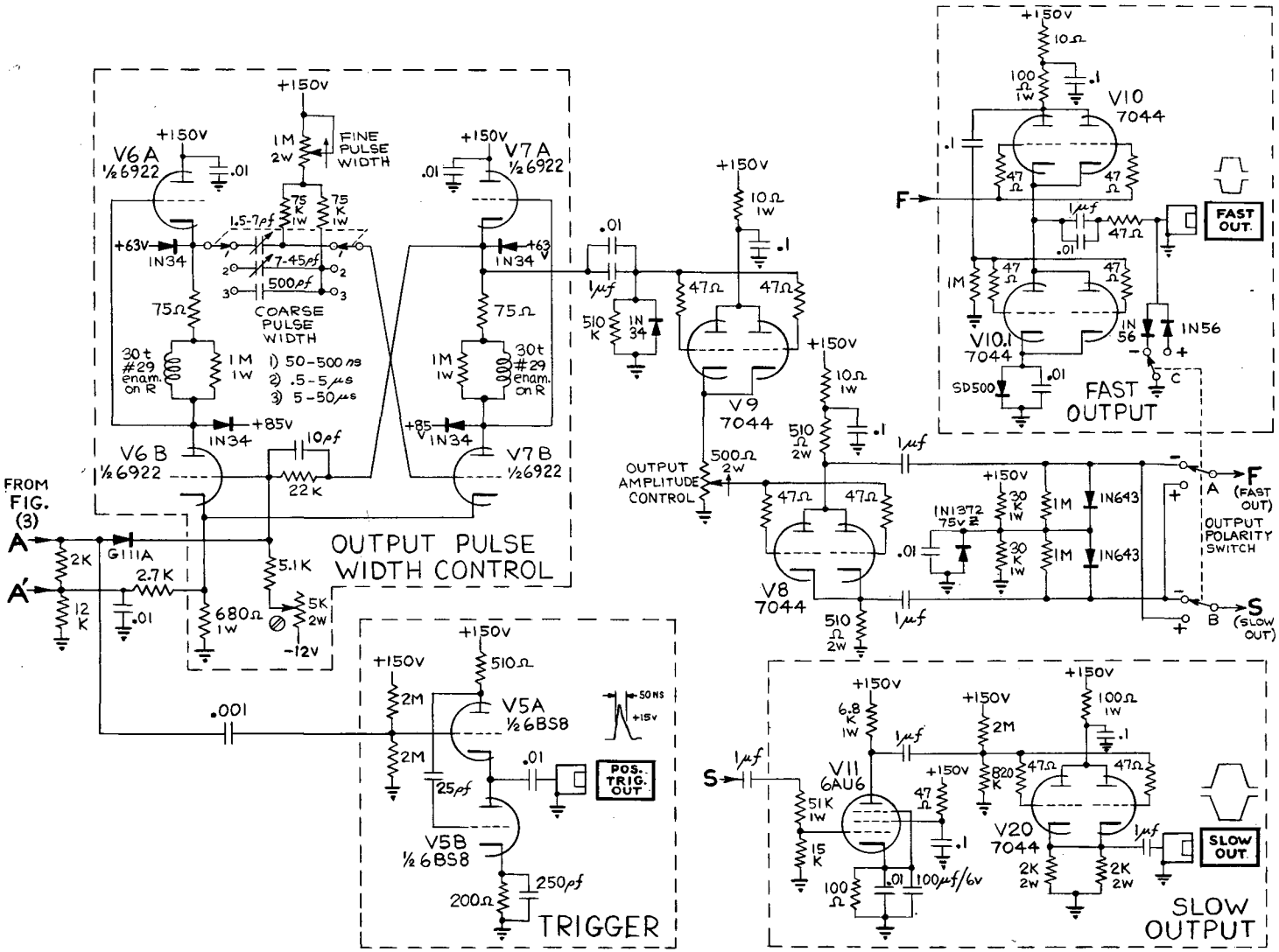

Fig. 4 - Circuit Diagram of the Gated Pulse Generator - Part 2

File No. CC10-4 (7)

Similarly, the internal-gate generator (V14) is a monostable multivibrator in the single-pulse position. Otherwise, it is an astable multivibrator. This generator triggers a monostable multivibrator which determines the gate-pulse width. On-gate or off-gate operation is selected after the phase inverter (V3), and the signal is passed on to a cathode follower output (V12).

The differentiated output of the square-wave generator is applied to the gate circuit (V4 and transistor 2N447). When the Gate-Function Switch is in the "Ungated" position, the base of the NPN transistor is returned to the collector and to a positive voltage. The transistor turns on and allows V4 to conduct. In this state the gate is turned on. When the Gate-Function Switch is in either the "Internal Gate" or "External Gate" positions, the transistor is biased beyond cutoff by a fixed negative bias. The gate, then, is turned off. A positive gate signal from the internal-gate generator, or from an external source, will overcome this bias and turn on the transistor and the gate.

The positive-trigger pulse is isolated and shaped by the circuit of V5.

The output-pulse width control (V6 and V7) is a monostable multivibrator which is triggered by the pulses passing through the gate from the output-pulse generator.

Control of the output-pulse amplitude is achieved in the cathode of V9.

The polarity of the output pulse is selected after phase inverter V8, and the signal is passed to both the fast output circuit (V10 and V10.1) and to the slow output stage, where it is first amplified (V11) and then coupled to cathode-follower V20.

REFERENCES:

1. UCRL Drawing 3X 5894.
2. UCRL Counting Handbook, Counting Note CC10-3.
3. Personnel at UCRL, Berkeley Site, familiar with this unit: J. Hazelwood (Counting Group).

COUNTING NOTE

DEL-A-GATE

ABSTRACT: The Del-a-gate is a solid-state variable delay and gate unit. It consists of an amplitude discriminator, delay multivibrator and a gate multivibrator. When an input signal exceeds the threshold of the discriminator, the delay multivibrator is initiated. At the termination of the delay pulse, a gate pulse is generated. The discriminator, delay and gate circuits are all continuously adjustable.

Special features of this unit include; 1) a tunnel-diode discriminator; 2) 5 Mc repetition rate: 3) 50% output duty factor; and 4) 10 nanosec rise and fall time output pulses.

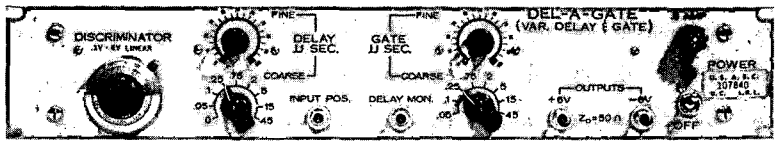

Fig. 1. Front Panel of Del-a-gate

I. INPUT SPECIFICATIONS

1. Polarity: Positive
2. Input Impedance 1K
3. Threshold
   a) Range: 0.3 V to 6 V, adjustable
   b) Temp Coeff: Less than 0.5%/°C at all settings
   c) Shift with duty factor (DF): Proportional to DF up to 20% DF
   d) Linearity: 1% max deviation from each point on a straight line from 0.3 V to 6.0 V, provided input pulse rise time is slower than 20 nanosec and width (FWHM) is greater than 40 nanosec
4. Max Rep Rate: 5 Mc
5. Max Permissible Input Amplitude: 25 V

II. OUTPUT SPECIFICATIONS

1.	Polarities:	Pos and Neg simultaneously
2.	Amplitude:	6 V open circuit 3 V into 50 ohms
3.	Output Impedance	50 ohms
4.	Rise anf Fall Time:	10 nanosec when terminated in 50 ohms
5.	Delay:	40 nanosec - 100 μsec, continuously adjustable. Also zero delay position.
6.	Gate:	40 nanosec - 100 μsec, continuously adjustable
7.	Duty Factor:	50% max (delay and gate multivibrators)
8.	Jitter:	Less than 0.1%

III. POWER

1. 105 - 125 VAC, 25 watts

IV. OPERATING INSTRUCTIONS

1. Input: The input impedance is set at 1 K ohms to avoid loading the input pulses. However, if the input rise time is less than 100 nanosec, reflections may occur and it may be necessary to terminate with a lower impedance.

The input is capacitively coupled so there will be a base line shift and change of threshold with increasing duty factor. The change of threshold, in percent, is proportional to duty factor up to 20%, beyond which the threshold changes more rapidly.

2. Discriminator helipot: The helipot is calibrated in 0 - 10 major divisions. The 0 position corresponds to 0.3 v threshold, the 10 position to 6 v threshold. A calibration chart may easily be made to translate helipot settings into volts. The accuracy of the 0.3 v and 6 v limits should not be considered better than + 5%, unless checked.

3. Controls: The COARSE delay and gate dials are marked to correspond to the approximate center of the range. The FINE controls provide continuous adjustment and overlap.

4. Delay monitor: A front panel delay MONITOR connector permits observation or use of the delay one-shot multivibrator waveform without interfering with the circuit timing. Its output impedance is 50 ohms.

5. Output connectors: To obtain clean 3 v pulses, with 10 nanosec rise and fall times, it is necessary to use 50 ohm cable from the output connectors and terminate them in 50 ohms.

With unterminated outputs, the unit will supply 6 v pulses. The rise time will still be 10 nanosec; however there will be about 15% overshoot, and a fall time of about 70 nanosec, depending on the cable capacitance.

V. CIRCUIT DESCRIPTION

The block diagram and associated waveforms of the Del-a-gate are shown in Fig. 2.

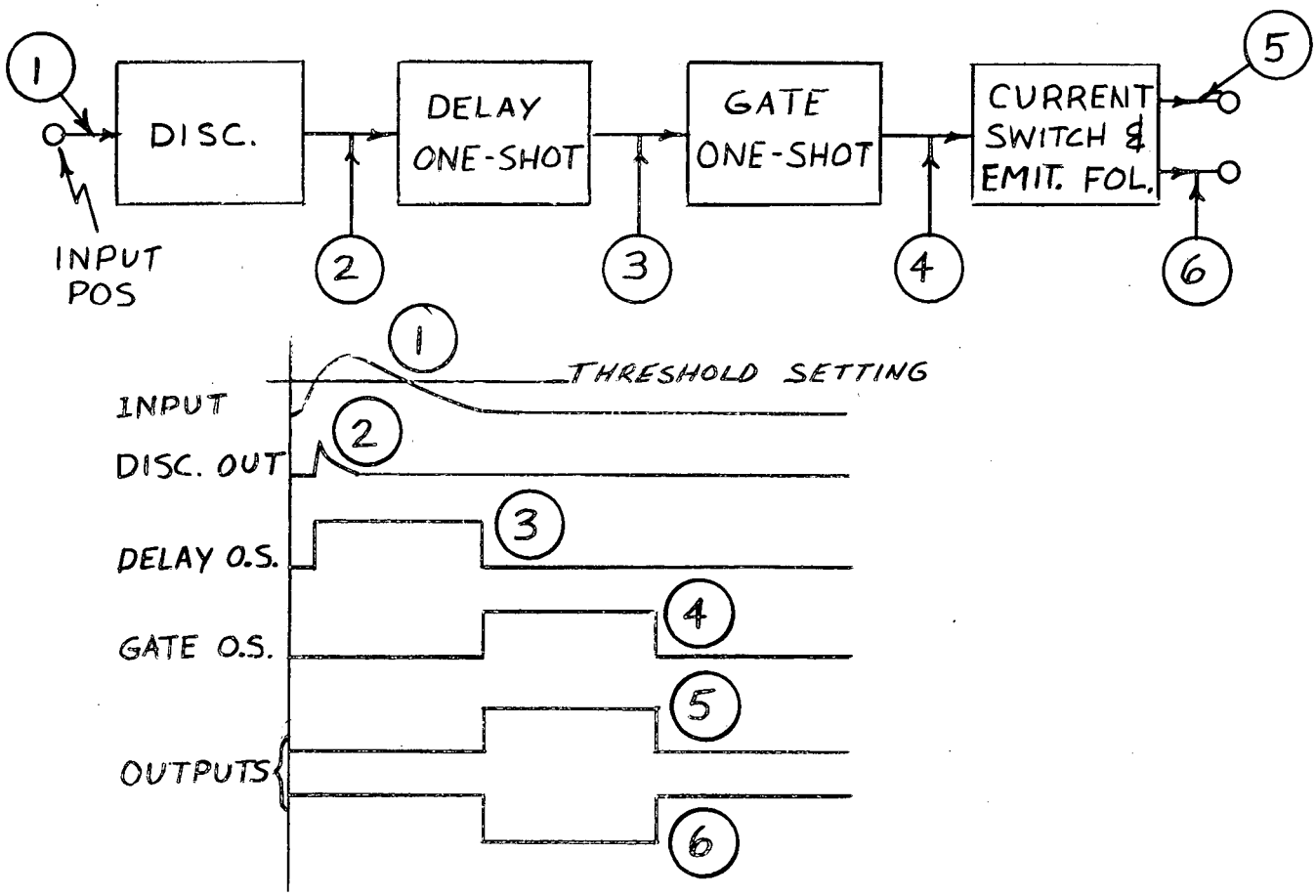

Fig. 2. Block diagram and waveforms of Del-a-gate

The amplitude sensing device is a tunnel diode (TD) which is normally biased in its low-voltage state. The bias current in the TD is adjusted by the front panel helipot DISCRIMINATOR. The TD stays in its high voltage state as long as the input signal stays above its threshold, and then returns to its low voltage state. The switching waveform is amplified and shaped and appears at the output of the discriminator as Waveform 2.

Waveform 2 initiates a delay whose length is controlled by the front panel DELAY controls. The delay pulse is shown in Waveform 3. The trailing edge of the delay is differentiated and triggers a gate. The width of the gate is adjusted by front panel GATE controls, and it appears as Waveform 4.

Waveform 4 triggers a current switch which has complementary outputs. The two outputs are directed into separate emitter followers and then to the output connectors. These are shown in Waveforms 5 and 6.

REFERENCES:

1. DEL-A-GATE SCHEMATICS

   a) Front Panel 4X5403

   b) Power Regulator 4X5412

   c) Timing Circuits 4X5424

   d) Discriminator 4X5433

   e) Assembly 4X6184

   f) Block Diagram 5X4051

   g) Check-Out Information 5X4041

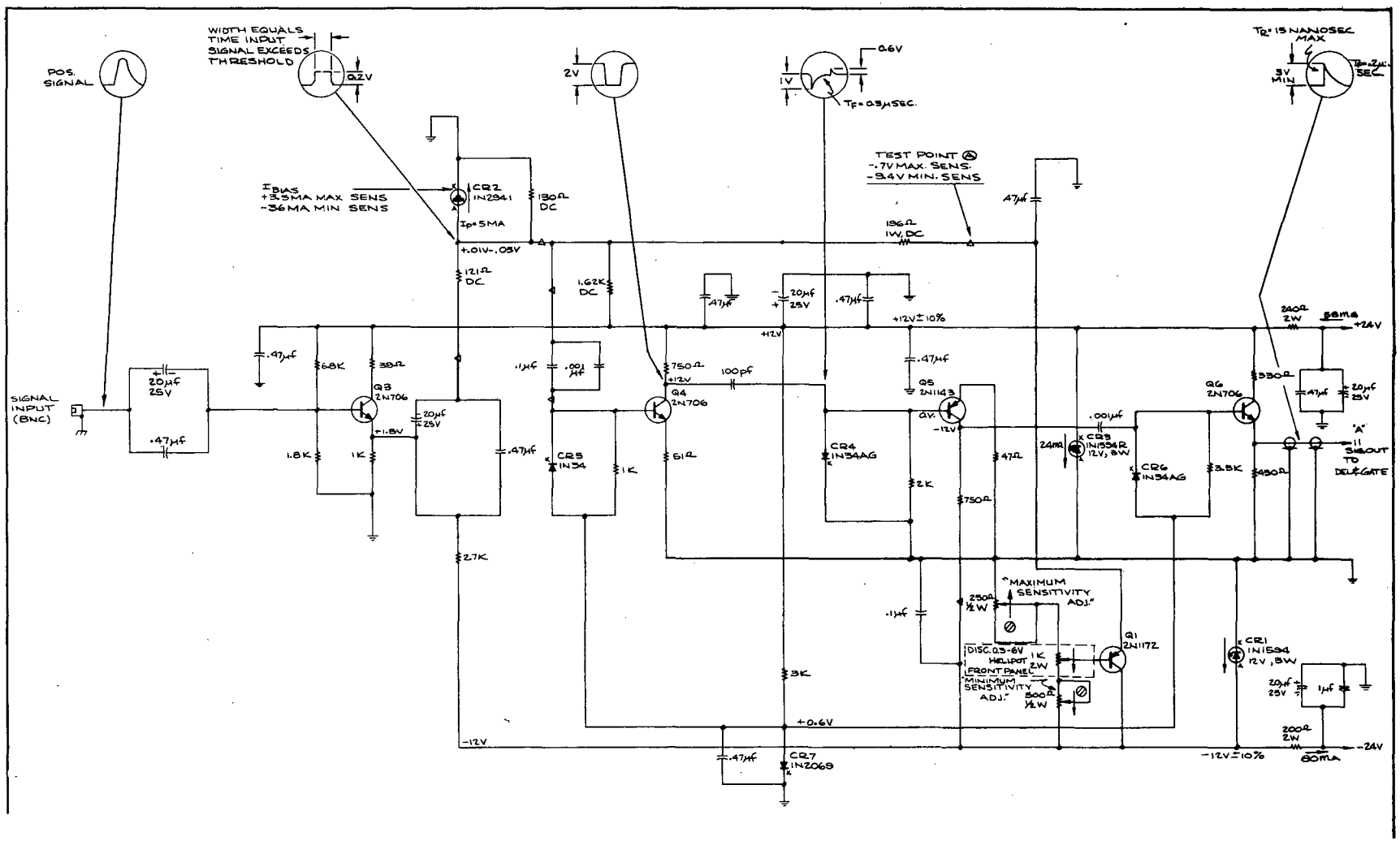

Fig. 3. Discriminator Schematic Diagram

File No. CC10-5 (5)

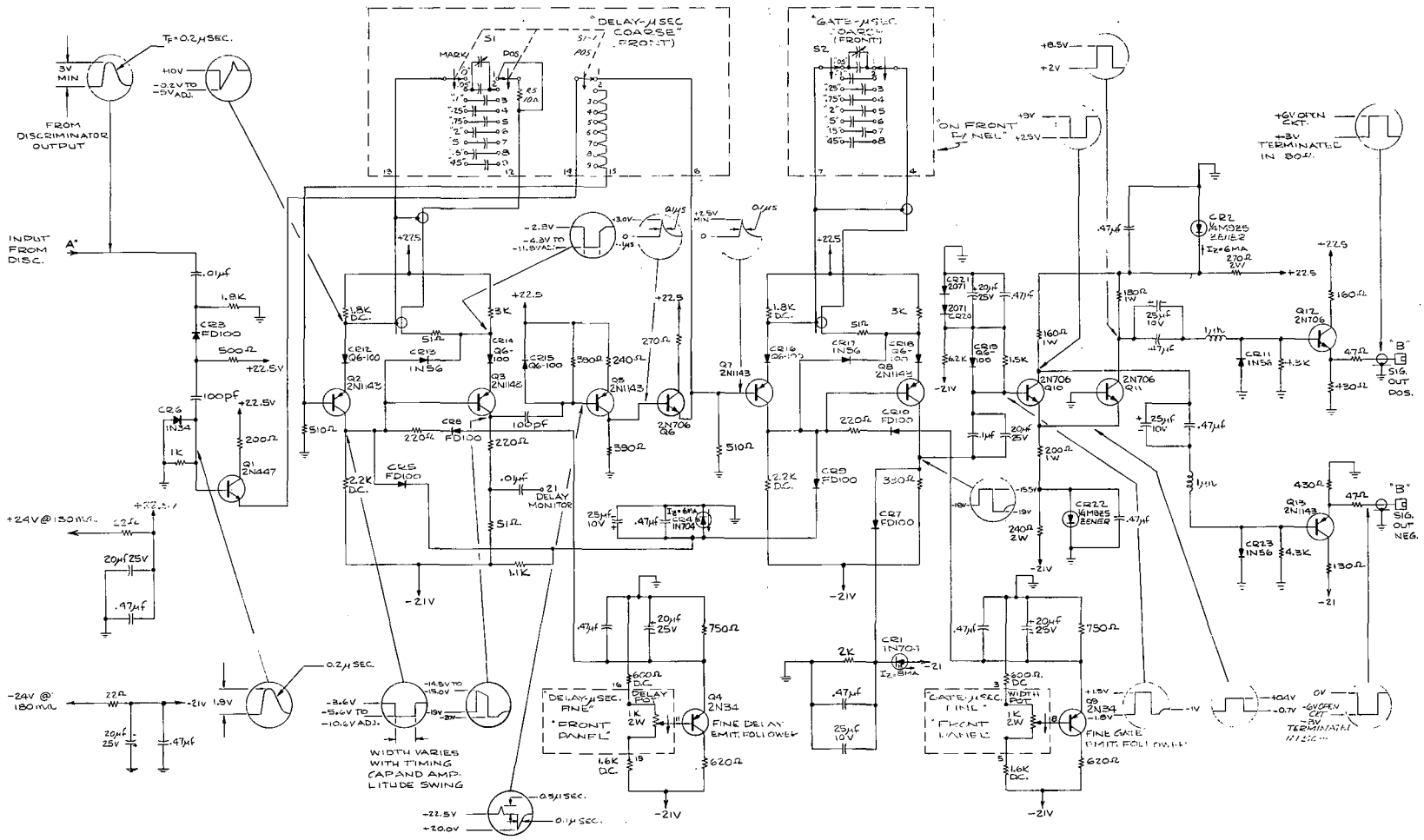

Fig. 4 - Delay and Gate Schematic Diagram

File No. CC 10-5A (6)

File No. CC 10-6 (1)
January 13, 1964
H. G. Jackson

Lawrence Radiation Laboratory, University of California, Berkeley

COUNTING NOTE

DELAY GATE - 11X2461 P-1

I. SUMMARY

This unit is useful for generating delay or gate signals using standard 4 V logic levels.[1] It takes the form of a multivibrator with complementary inputs and outputs. A selector switch allows the multivibrator to be operated in the bistable mode; or one of six monostable positions covering the range 1 μs to 1 s in decade steps. Fine control of the pulse width is obtained from a potentiometer mounted concentric with the selection switch.

Dual "OR" inputs are provided on both the SET and RESET inputs. The multivibrator may also be manually SET or RESET by means of a push-button. A light indicates when the multivibrator is in the SET position. A toggle switch is provided to inhibit signals into the unit; in the OFF position the multivibrator is automatically RESET.

The unit is packaged in a shielded nanobox. A size 4X box (3 x 5-1/4" panel) is used.

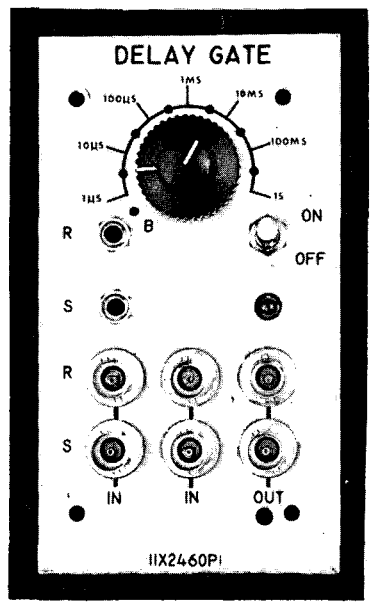

Fig. 1 - Delay Gate -- Front View

[1] See CC 5-9 for logic voltage levels.

II. SPECIFICATIONS

Input

Impedance	1 K Ω
"1" Level	+4 V
"0" Level	-1 V
Min. Width	30 ns
Max. duty cycle	90 %

Output

Impedance	< 50 Ω (50 mA max.)
"1"	+4 V
"0"	-1 V
Delay	< 15 ns
Rise-time	< 15 ns for step input

Delay/Gate Widths

Bistable

1 μs - 10 μs
10 μs - 100 μs
100 μs - 1 ms
1 ms - 10 ms
10 ms - 100 ms
100 ms - 1 s

Power Required

+12 V	70 mA (120 mA max.)	pin 10.
-12 V	20 mA	pin 21.
Ground		pin 1.

HGJ:mt

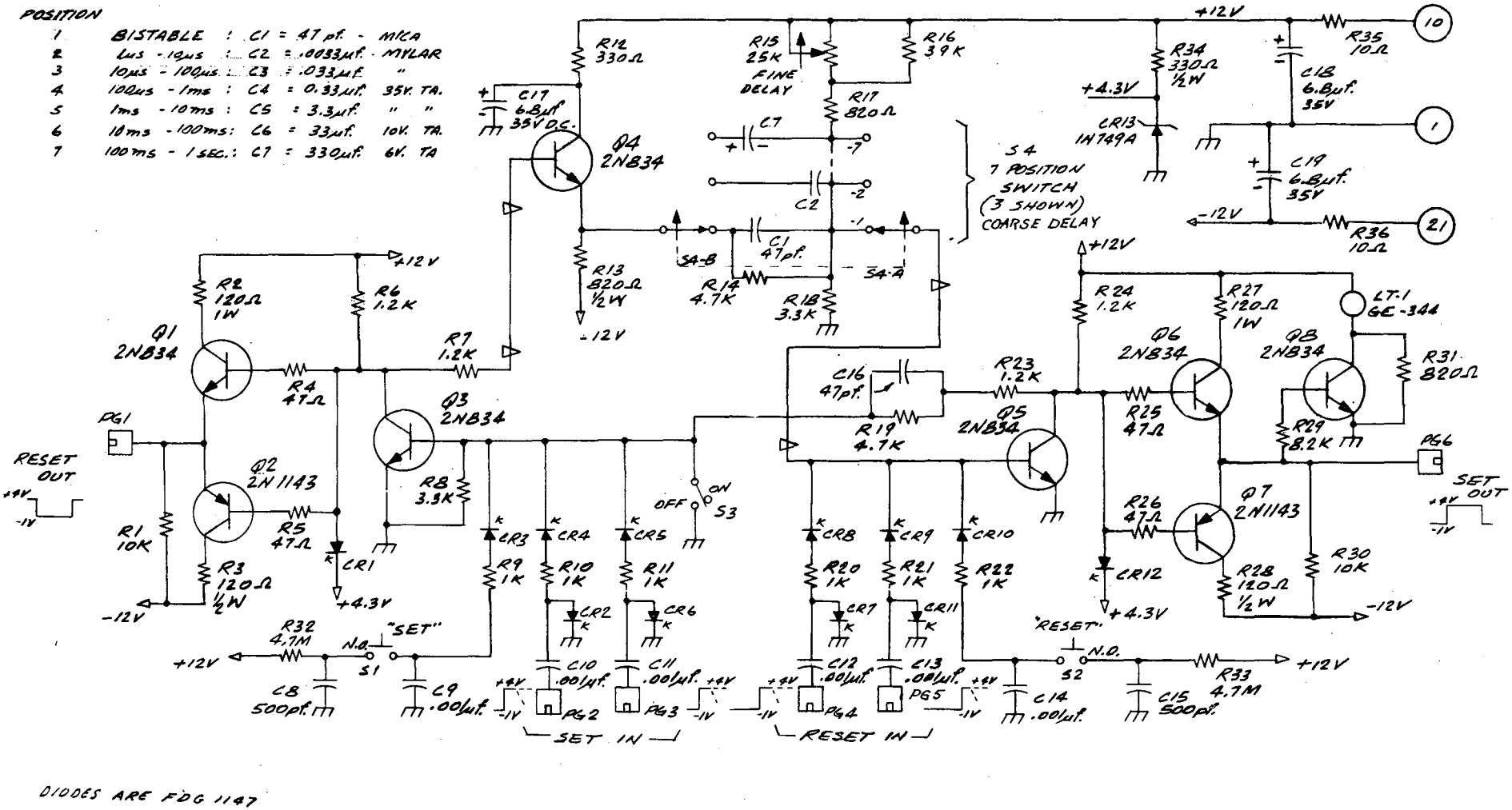

Delay Gate Schematic

File No. CC 10-7 (1)
January 14, 1964
H. G. Jackson

Lawrence Radiation Laboratory, University of California, Berkeley

COUNTING NOTE

RELAY DRIVER - 11X2431 P-1

I. SUMMARY

A bistable circuit is used to operate a mercury-wetted contact relay in two modes:

1. The relay is energized by application of a standard +4 V logic level[1] to the SET input. The relay will stay energized until the bistable circuit is reset by a +4 V logic level at the RESET input.
2. The relay can also be energized by applying a +4 V logic level at the INPUT. Here the relay will stay energized only during the interval of time that the "1" input is present.

The relay contacts (SPDT) are brought to the front panel and also to the rear connector.

The relay contacts should be protected in accordance with the chart shown in Fig. 2. Information from C. P. Clare Co., Catalog 201-A. The maximum contact rating is 2 A or 500 V.

The unit is packaged in a shielded nanobox. A size 3X box (2-1/4 x 5-1/4" panel) is used.

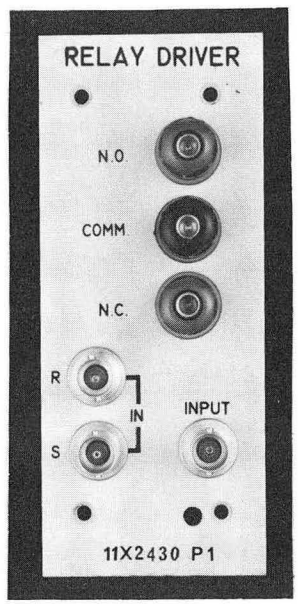

Fig. 1 - Relay Driver -- Front View

[1] See CC 5-9 for logic voltage levels.

II. SPECIFICATIONS

Input	Bistable	Input
Impedance	1 K Ω	1 K Ω
"1" Level	+4 V	+4 V
"0" Level	-1 V	-1 V
Min. width	100 ns	3 ms
Max. rate	180 pps	180 pps
Relay Contacts	Common pin 16.	
	NC pin 17.	
	NO pin 18.	

Power Required

+12 V 60 mA	pin 10.
-12 V 4 mA	pin 21.
Ground	pin 1.

HGJ:mt

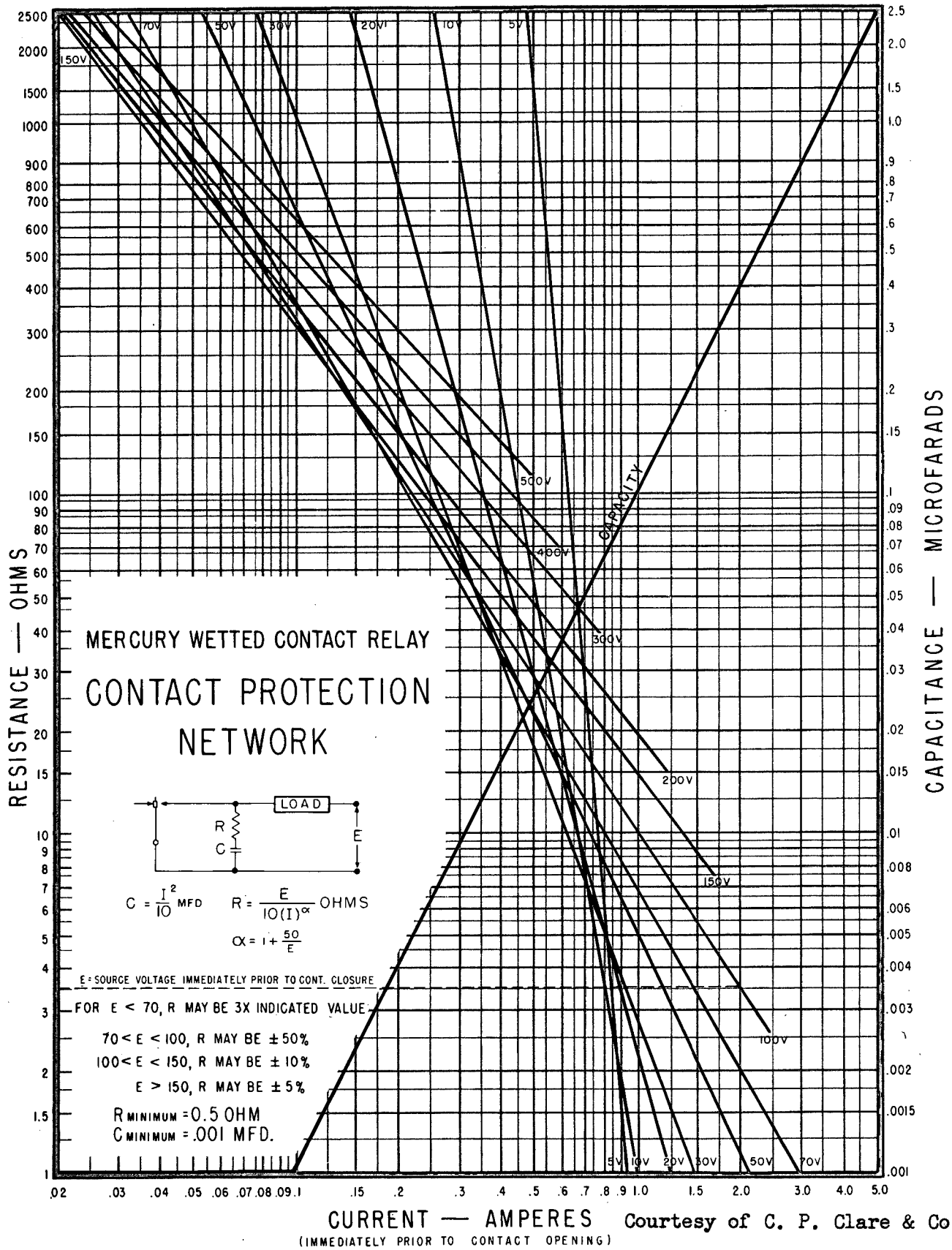

Courtesy of C. P. Clare & Co.

Fig 2. - Contact Protection Network

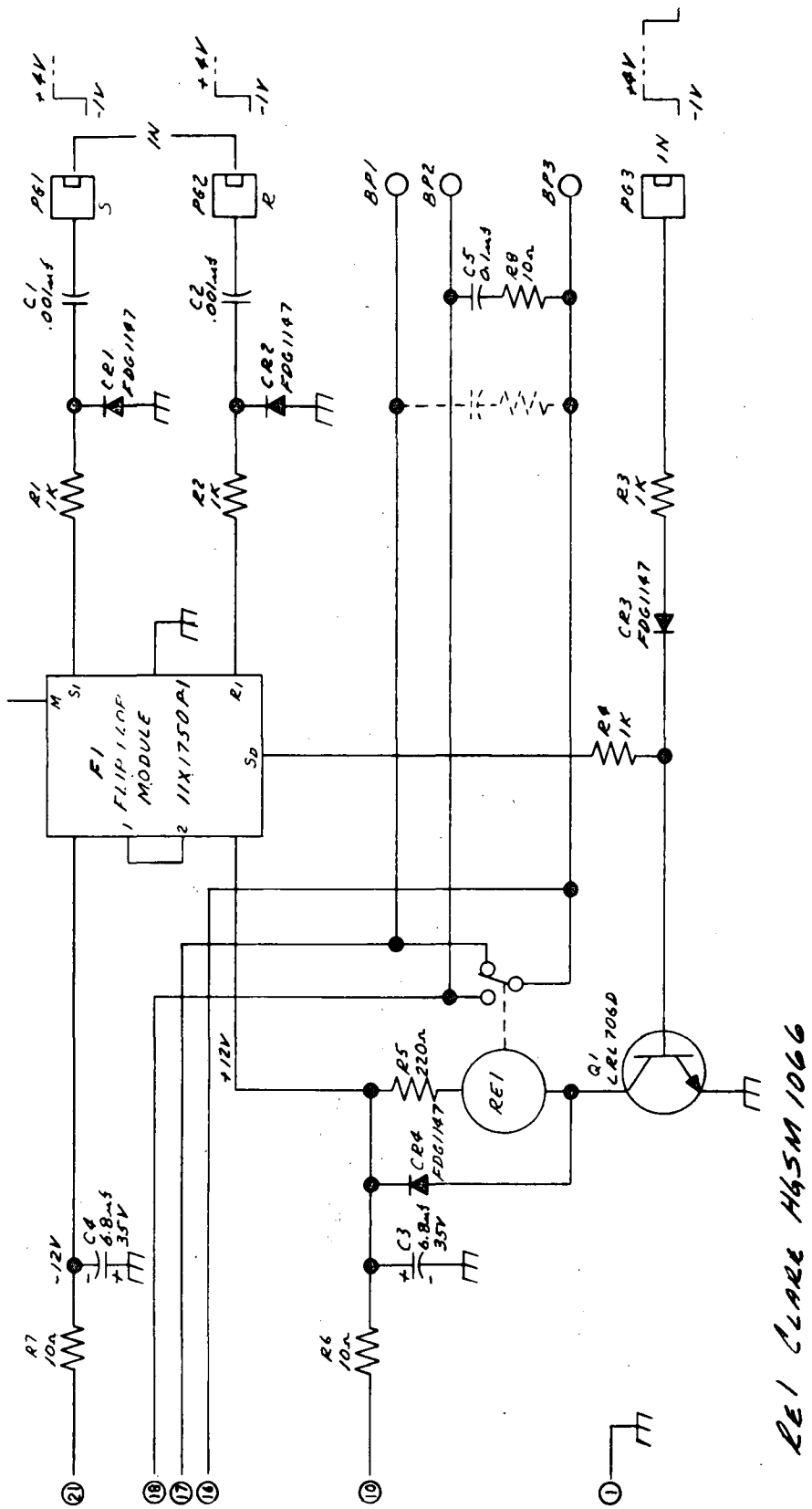

Relay Driver Schematic

File No. CC 10-8 (1)
January 13, 1964
H. G. Jackson

Lawrence Radiation Laboratory, University of California, Berkeley

COUNTING NOTE

PULSE GENERATORS 11X2451 P-1 and 11X2451 P-2

I. SUMMARY

These units are useful in simulating the 184" Cyclotron and Bevatron repetition rates as well as a 1 pps and a 10^6 pps rate. The 11X2451 P-2 unit has an improved oscillator; the operating specifications are the same on both units.

The pulse frequency is determined by an astable multivibrator, and the pulse width by a monostable multivibrator. These are followed by a pulse amplitude control and parallel NPN-PNP output emitter-followers.

Selection is made on one of four pulse frequency positions. A fine control concentric with this selector switch allows the frequency to be varied at least ± 50%. An EXTERNAL frequency source may also be used.

Pulse width selection is from 100 ns to 1 s in seven decade steps. Fine control of the pulse width is by a potentiometer mounted concentric with the pulse width switch.

The amplitude control allows the pulse amplitude to be varied from 0 to +4 V. When set to maximum amplitude, the unit generates a standard +4 V logic level.[1]

The unit is packaged in a shielded nanobox. A size 4X box (3 x 5-1/4" panel) is used.

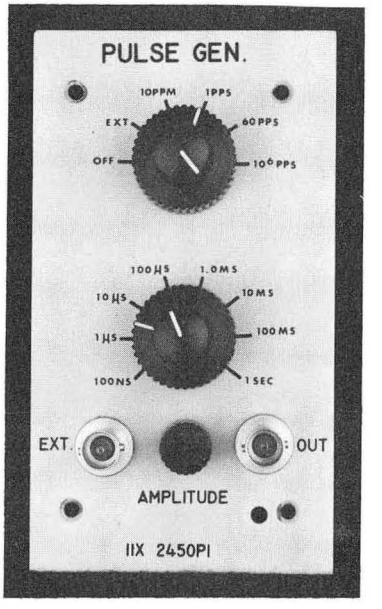

Fig. 1 - Pulse Generator -- Front View

[1] See CC 5-9 for logic voltage levels.

II. SPECIFICATIONS

Ext. Input

Impedance	1 K Ω
Trigger Level	+4 V
Rise-time	< 1 μs

Output

Impedance	< 50 Ω (50 mA max.)
Amplitude	Variable 0 to +4 V
Rise-time	< 15 ns

Pulse Frequency

Off
External
10 ppm
1 pps
60 pps
10^6 pps

Pulse Width

100 ns - 1 μs
1 μs - 10 μs
10 μs - 100 μs
100 μs - 1 ms
1 ms - 10 ms
10 ms - 100 ms
100 ms - 1 s

Power Required

+12 V	70 mA (120 mA max.)	pin 10.
-12 V	35 mA	pin 21.
Ground		pin 1.

HGJ:mt

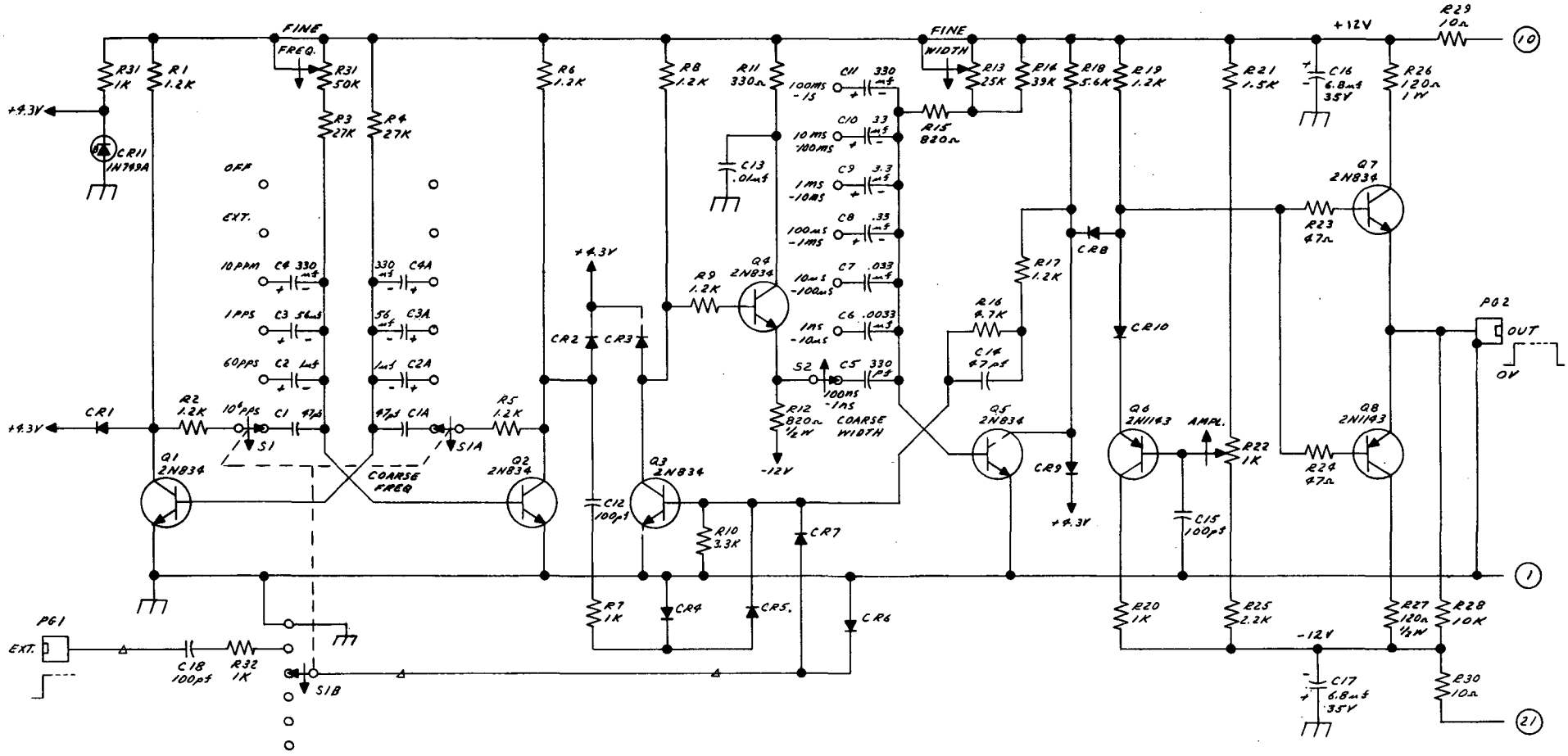

ALL DIODES ARE FDG1147 UNLESS OTHERWISE NOTED.

Pulse Generator Schematic 11X2452 S-1

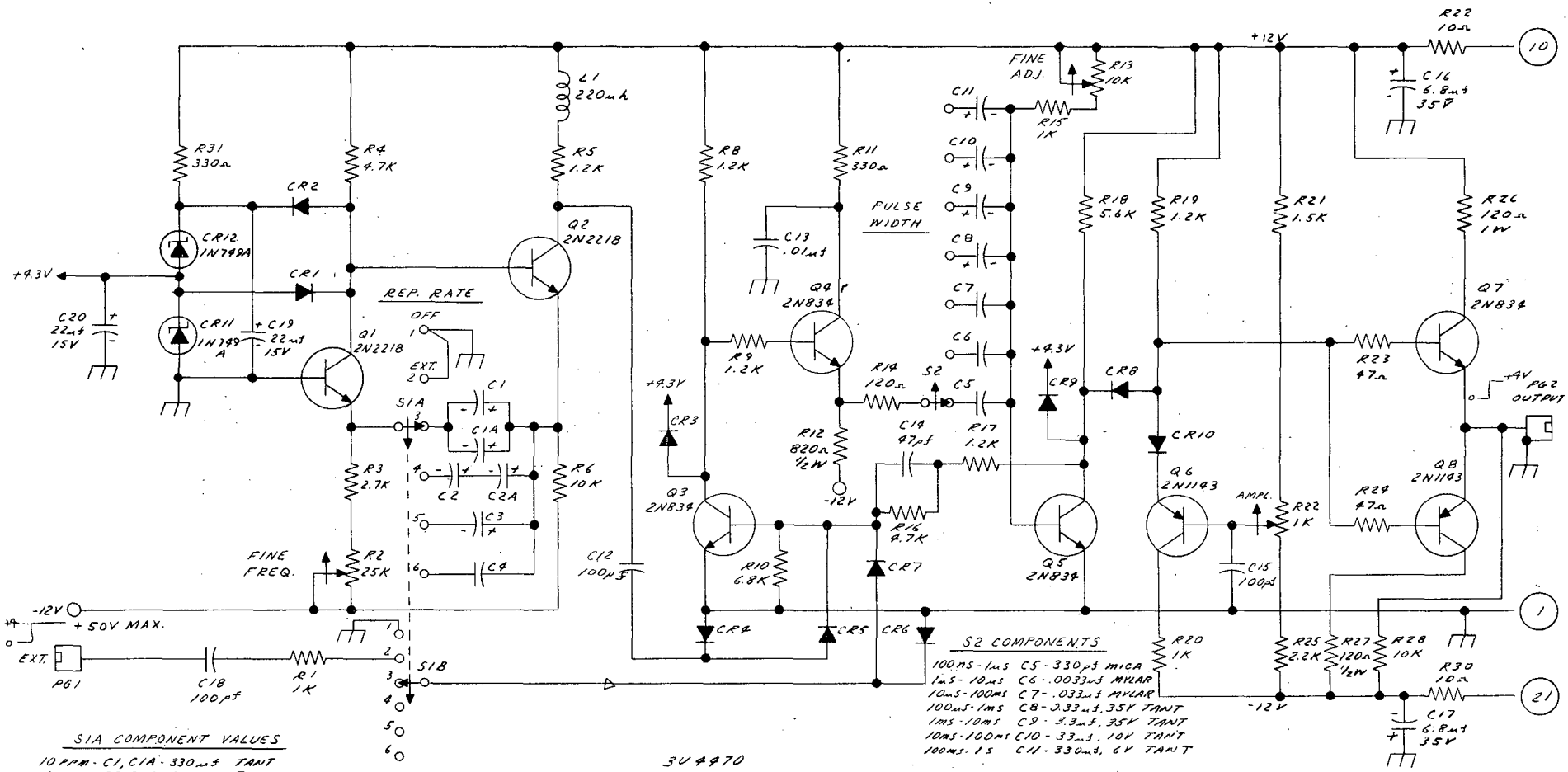

S1A COMPONENT VALUES

10 PPM	C1, C1A - 330 µf	TANT
1 PPS	C2, C2A - 330 µf	TANT
60 PPS	C3 - 2.2 µf	TANT
10^6 PPS	C4 - 150 µf	MICA

S2 COMPONENTS

100 ns - 1 µs	C5 - 330 pf	MICA
1 µs - 10 µs	C6 - .0033 µf	MYLAR
10 µs - 100 ms	C7 - .033 µf	MYLAR
100 µs - 1 ms	C8 - 3.33 µf, 35V	TANT
1 ms - 10 ms	C9 - 3.3 µf, 35V	TANT
10 ms - 100 ms	C10 - 33 µf, 10V	TANT
100 ms - 1 s	C11 - 330 µf, 6V	TANT

NOTE:

1. ALL DIODES ARE FDG 1147 EXCEPT AS NOTED.

Pulse Generator Schematic 11X2452 S-2

File No. CC 10-9 (1)
January 14, 1964
H. G. Jackson

Lawrence Radiation Laboratory, University of California, Berkeley

COUNTING NOTE

PULSE GENERATOR - 18X1051 P-1

I. SUMMARY

This is a general purpose pulse generator, with pulse repetition rates available from 100 pps to 10^6 pps in four decade steps. A fine frequency control mounted concentric with this selector switch allows the rate to be varied with at least a 10% overlap on all ranges. An external frequency source may also be used.

Pulse width selection is from 100 ns to 1 s in seven decade steps. Fine control is again made by a concentric potentiometer with at least 10% overlap on all ranges.

The amplitude control allows the pulse amplitude to be varied from 0 to +4 V. When set to maximum amplitude, the unit generates a standard +4 V logic level.[1]

The unit is packaged in a shielded nanobox. A size 4X box (3 x 5-1/4" panel) is used.

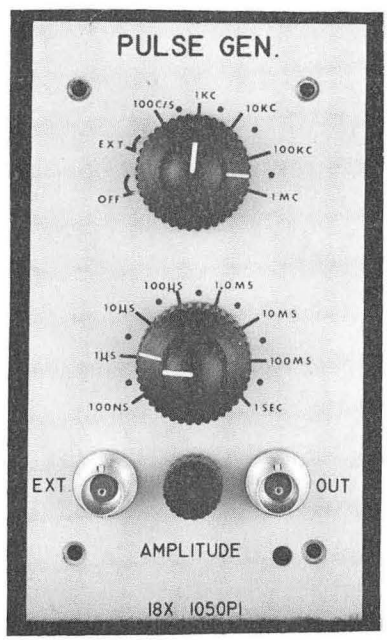

Fig. 1 - Pulse Generator -- Front View

[1] See CC 5-9 for logic voltage levels.

II. SPECIFICATIONS

Ext. Input

Impedance	1 K Ω
Trigger level	+4 V
Rise-time	< 1 μs

Output

Impedance	< 50 Ω (50 mA max.)
Amplitude	Variable 0 to +4 V.
Rise-time	< 15 ns

Pulse Frequency

Off
External
10^2 pps
10^3 pps
10^4 pps
10^5 pps
10^6 pps

Pulse Width

100 ns - 1 μs
1 μs - 10 μs
10 μs - 100 μs
100 μs - 1 ms
1 ms - 10 ms
10 ms - 100 ms
100 ms - 1 s

Power Required

+12 V	75 mA (125 mA max.)	pin 10.
-12 V	50 mA	pin 21.
Ground		pin 1.

HGJ

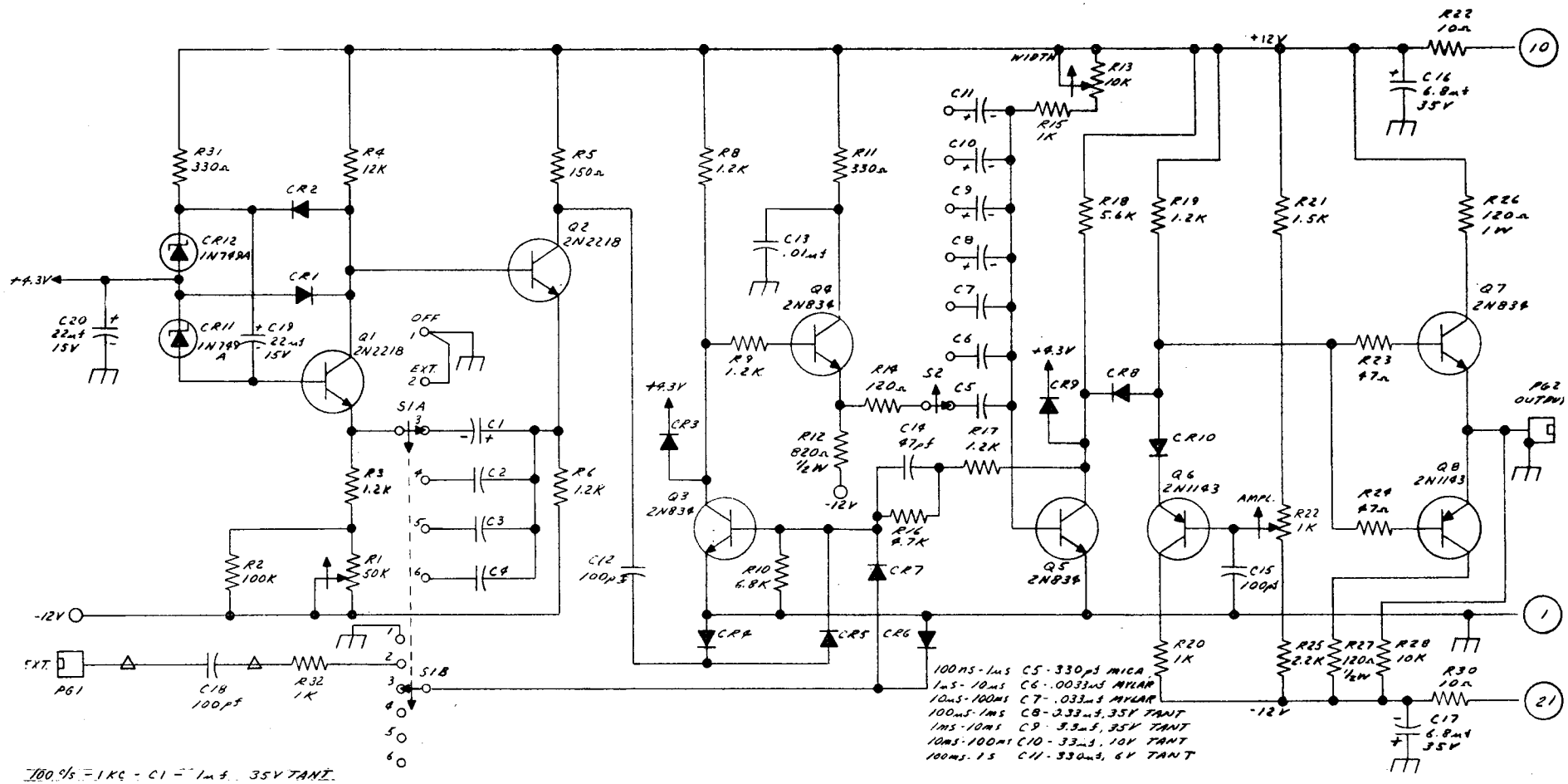

Pulse Generator Schematic

File No. CC 10-10A (1)
June 30, 1966
George Constantian
and Ken Bregger

Lawrence Radiation Laboratory, University of California, Berkeley

COUNTING NOTE

HIGH-VOLTAGE POWER FOR MULTIPLIER PHOTOTUBES

I. POWER SUPPLIES

Table I indicates the manufacturers' specifications for high-voltage power supplies in current use at LRL. These units are checked to meet LRL specifications in effect at the time of purchase.

II. POWER DISTRIBUTION

A. Resistive Dividers.

Where load regulation is not a problem, resistive dividers may be used in distributing power from one source to several phototube bases.

Fig. 1 indicates a typical 5 kV, 4-channel high-voltage divider panel. At 5 kV, no load, it permits a 600 V adjustment in hv outputs. Each output may be switched off individually. Up to 3 milliampers may be taken from each output without damage to the unit. Each divider panel draws 4 mA from the supply at 5 kV, no load. A switched meter output permits the monitoring of any output with an external meter.

A 3 kV, 4-channel divider is also available. At 3 kV, no load, the output may be varied by 500 V. Up to 3 milliamperes may be taken from each output without damage to the unit. Each divider panel draws 4 mA from the supply at 3 kV, no load. A switched meter output permits the monitoring of any output with an external meter.

B. Zener Dividers.

For better load regulation a zener diode divider is available (Fig. 2, 3). This high-voltage divider has twenty separate outputs, each individually adjustable by increments of 20 volts from the power supply voltage to 580 volts below the supply voltage. The divider is designed to supply currents from 0 to 40 ma. A 50 ma meter is mounted on the front of the unit for continuous monitoring of total load current (Red-lined at 40 ma as a limit reminder).

Either positive or negative high voltage can be used by plugging the positive or negative voltage source into the appropriately marked input jack on the rear of the unit, and inserting a pair of shorting pins at the proper level in the ammeter reversing circuit. The load can be distributed in any desired combination totaling 0 to 40 ma, provided no single output exceeds 15 ma. This is a reasonable limit for the dissipation level in the 1/2 watt 1K ohm surge limiting resistor in series with each output. The power source must, of course, match the polarity, maximum voltage, and maximum current requirements of any intended usage. A 3 KV, 40 ma supply is recommended; 6KV is max.

Output voltages are supplied to an array of twenty marked high voltage connectors on the rear of the unit. The twenty columns of the front panel matrix correspond to the outputs. The thirty rows of this front panel matrix correspond to the supply voltage and successive 20 volt increments below the supply voltage. Output voltage selection is accomplished by "Switching In" the proper voltage by means of a shorting pin with an insulated handle inserted into a hole with the appropriate coordinates on the matrix board. Adjustment is accomplished by moving vertically in the column corresponding to the output to be adjusted by the desired number of 20 V increments (Rows). It is recommended that output voltage adjustment be made by using two shorting pins in a "leap frog" manner in order to avoid disconnecting the load entirely whenever a pin is pulled. Note, however, that while two pins are inserted in the same column the zener diode between the two is shorted out - the voltage being that of the higher (absolute value) of the two. Thus in adjusting one output in a "leap frog" manner, momentary 20 volt changes will occur in all other outputs set to levels below the higher (absolute value) of the two "leap frog" pins.

Provision is made on the front panel for externally monitoring the voltage supplied to any selected output by "Switching In" an external voltmeter. This is accomplished by connecting an appropriate meter to the external meter jack and inserting a pin in the receptacle directly below the column for which the voltage is to be monitored.

Output load regulation can be estimated for any circumstance by use of the following relationship. ΔE/ma/row (zener diode) = 0.035 volts. This results in a worst case ΔE of approximately 1 volt/ma load change in row 30.

III. METERING

3 kV and 5 kV electrostatic voltmeters of 2% accuracy are available in rack mounted drawers for monitoring divider-panel outputs. 4 and 10-position metering panels are available for use with the meters to monitor up to 10 divider panel meter outputs.

The 184" Cyclotron counting areas are equipped with rack-mounted digital voltmeters and 1000 megohm voltage dividers providing 4-digit read-outs of 0.1 V resolution (with most significant figure shifted off scale) and 0.5 V accuracy. A maximum of 0.06% change in voltage of an individual output of a 5 kV divider can be experienced when switching the 1000-megohm meter divider in and out of the circuit.

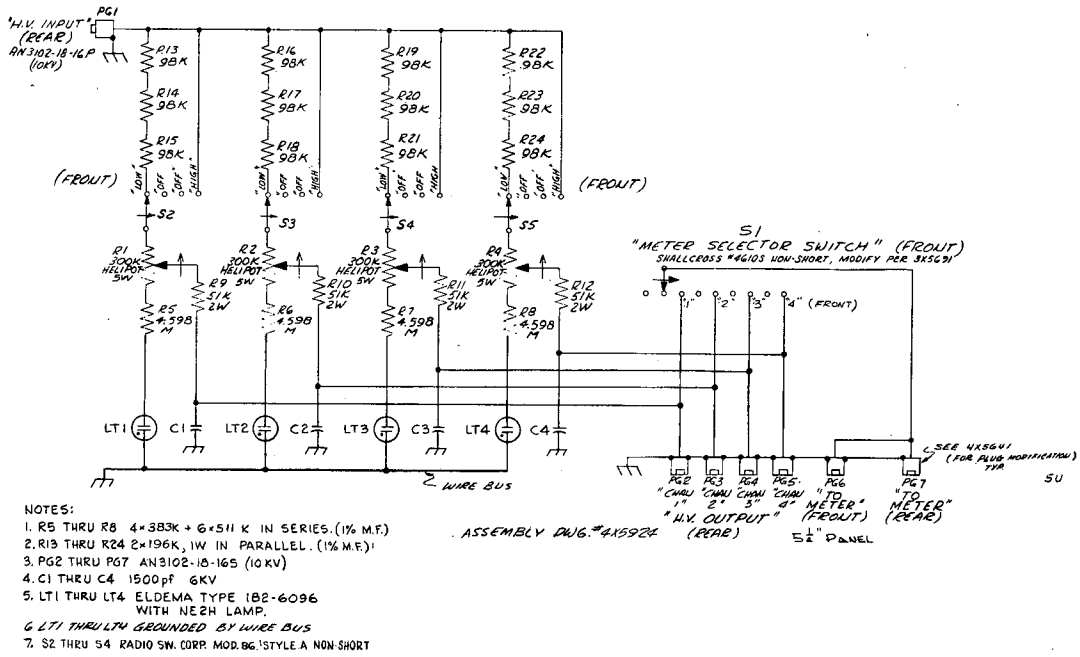

Fig. 1 - 5 kV Voltage Divider Panel Mod. II Schematic

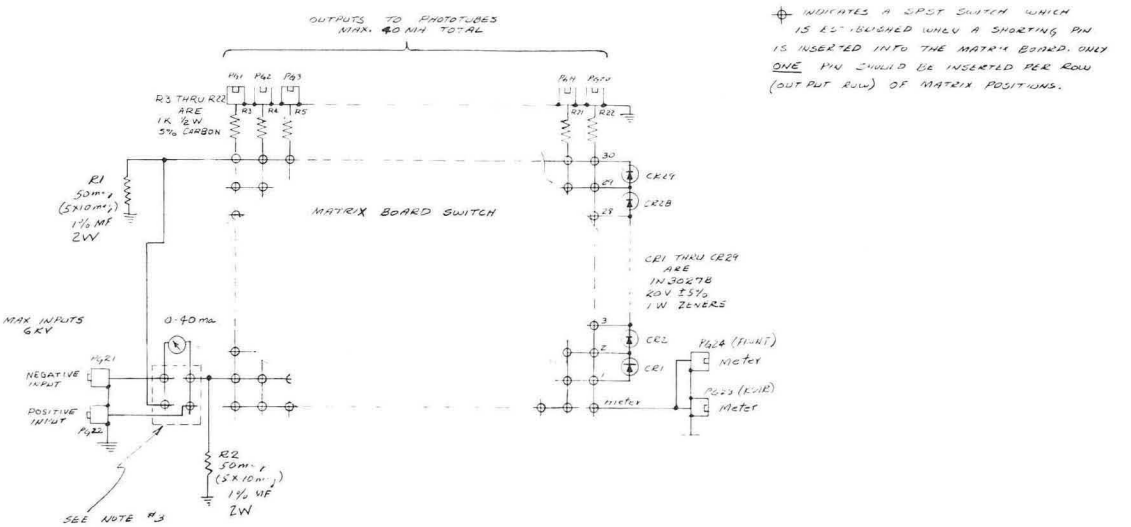

Fig. 2 - Zener Divider Panel - Schematic, 11X2562 S-1C

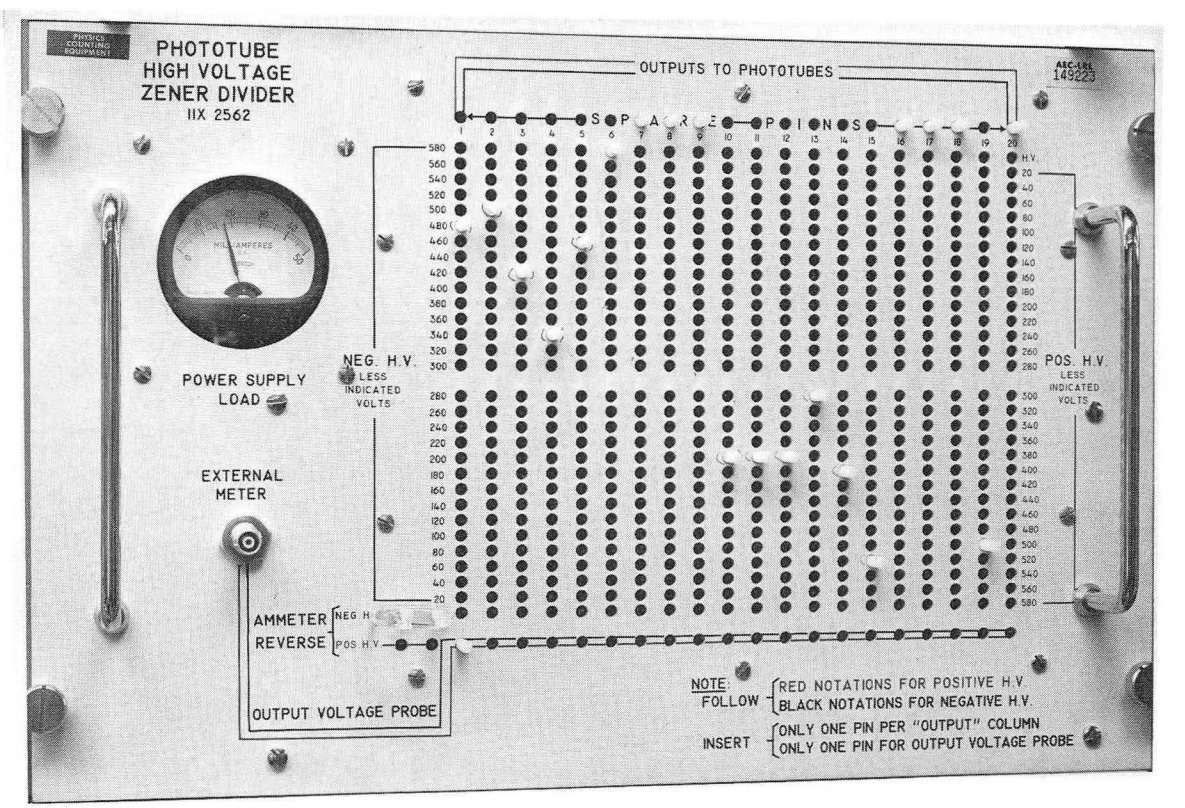

Fig. 3 - Zener Divider Front Panel

MFR. & MODEL	N.E. SCIENTIFIC MOD. RE-3002EW	N.E. SCIENTIFIC MOD. RE-5001EW	2X6314
VOLTAGE	± 0.5 kV to ± 3 kV	± 0.5 kV to ± 5 kV	± 0.5 kV to ± 3 kV
CURRENT	0-20 mA	0-10 mA	0-20 mA
LINE REGULATION[1]	± .005%	± .005%	± .005%
LOAD REGULATION[2]	± .005%	± .005%	± .005%
STABILITY	± .005%/Hr. ± .05%/Day	± .005%/Hr. ± .05%/Day	± .005%/Hr. ± .05%/Day
TEMP. COEFFICIENT			
RIPPLE & NOISE	2 millivolts p-p	2 millivolts p-p	2 millivolts p-p
VOLTAGE CONTROLS	4-500 V Steps 10-50 V Steps 1-60 V Vernier	8-500 V Steps 10-50 V Steps 1-60 V Vernier	4-500 V Steps 10-50 V Steps 1-60 V Vernier
VOLTAGE RESOLUTION[3]			
VOLTAGE ACCURACY[4]	± 2%	± 2%	± 2%
INPUT	105-125 V ac 60 CPS 130 W	105-125 V ac 60 CPS 125 W	105-125 V ac 60 CPS 130 W
PANEL HEIGHT	8-3/4"	8-3/4"	8-3/4"
CHASSIS DEPTH	12-1/2"	12-1/2"	12-1/2"
REMARKS			

TABLE I

[1] 105 V to 125 V.

[2] No Load to Full Load Except as Noted.

[3] The guaranteed minimum increment of output voltage adjustment.

[4] The accuracy of the output voltage indicated by the sum of the dial settings.

MFR. & MODEL	JOHN FLUKE MOD. 408 A/U	NJE MOD. 64H40	CARAD MOD. 1524A
VOLTAGE	± 0.5 kV to ± 6 kV	± 0.5 kV to ± 5 kV	± 0.5 kV to ± 3 kV
CURRENT	0-20 mA	0-20 mA	0-20 mA
LINE REGULATION	± .01%	± .01%	± .0001%
LOAD REGULATION	± .01%	± .005%	10 mA Step ± .001% + 20 mV
STABILITY	± .005%/Hr. ± .03%/Day	± .005%/Hr ± .05%/8 Hr.	± .005%/Hr. ± .05%/10 Hr.
TEMP. COEFFICIENT			
RIPPLE & NOISE	5 millivolts rms	5 millivolts p-p	1 millivolt rms
VOLTAGE CONTROLS	5-1000 V Steps 9-100 V Steps 10-10 V Steps 1-10 V Vernier	8-500 V Steps 9-50 V Steps 1-60 V Vernier	4-500 V Steps 10-50 V Steps 1-60 V Vernier
VOLTAGE RESOLUTION	10 millivolts		
VOLTAGE ACCURACY	± 0.25%	+ 2%	± 1% of Dial Setting
INPUT	117 V 50/60 CPS 250 W	105-125 V ac 60 CPS 350 W	105-125 V ac 60 CPS 210 W
PANEL HEIGHT	8-3/4"	8-3/4"	8-3/4"
CHASSIS DEPTH	15"	17-3/4"	14-5/8"
REMARKS	Interlock latching relay prevents starting the instrument with the X1000 switch in other than the 500 or 1000 positions.	Units must be mounted to allow 1-3/4" (one W.E. rack unit) above & below for air circulation.	

TABLE I (Cont.)

MFR. & MODEL	CARAD MOD. 1522	POWER DESIGNS MOD. 1544	POWER DESIGNS MOD. 1556
VOLTAGE	±.5 kV to ±5kV	±1V to ±3kV	±1V to ±6kV
CURRENT	0-20 mA	0-20 mA	0-20 mA
LINE REGULATION	±.001%	±.001% + 2mV	±.001% + 2mV
LOAD REGULATION	10 mA Step ±.001% + 20mV	±.001% + 2mV	±.001% + 2mV
STABILITY	±.005%/Hr. ±.05%/10 Hr.	±.005%/Hr. ±.03%/24 Hr.	±.005%/Hr. ±.03%/24 Hr.
TEMP. COEFFICIENT		25 ppm/°C	25 ppm/°C
RIPPLE & NOISE	1 millivolt rms	2 millivolts pp	2 millivolts p-p
VOLTAGE CONTROLS	8-500 V Steps 10-50 V Steps 1-60 V Vernier	5-500 V Steps 4-100 V Steps 10-10 V Steps 1-12 V Vernier	5-1000 V Steps 9-100 V Steps 10-10 V Steps 1-12 V Vernier
VOLTAGE RESOLUTION		10 millivolts	10 millivolts
VOLTAGE ACCURACY	±1% of Dial Setting	0.25% above 250 V	0.25% above 250 V
INPUT	105-125 V ac 60 CPS 300 W	105-125 V ac 50 to 400 CPS 130 W	105-125 V ac 50 to 400 CPS 200W
PANEL HEIGHT	8-3/4"	5-1/4"	8-3/4"
CHASSIS DEPTH	14-5/8"	16"	16"
REMARKS		Electronic overload protection protects supply in case of momentary or indefinite overload or short circuit. Reset not required.	Electronic overload protection protects supply in case of momentary or indefinite overload or short circuit. Reset not required.

TABLE I (Cont.)

MFR. & MODEL	POWER DESIGNS MOD. 1547
VOLTAGE	± 1 V to ± 3 kV
CURRENT	0-40 mA
LINE REGULATION	± .001% + 2 mV
LOAD REGULATION	± .001% + 2 mV
STABILITY	± .005%/Hr. ± .03%/24 Hr.
TEMP. COEFFICIENT	25 ppm/°C
RIPPLE & NOISE	1.0 millivolts p-p
VOLTAGE CONTROLS	5-500 V Steps 4-100 V Steps 10-10 V Steps 1-12 V Vernier
VOLTAGE RESOLUTION	20 millivolts
VOLTAGE ACCURACY	.25% above 250 V
INPUT	105-125 V ac 50 to 400 CPS 231 W
PANEL HEIGHT	5-1/4"
CHASSIS DEPTH	16"
REMARKS	Electronic overload protection protects supply in case of momentary or indefinite overload or short circuit. Reset not required.

TABLE I (Cont.)

File No. CC 10-11 (1)
February 15, 1966
H. G. Jackson

Lawrence Radiation Laboratory, University of California, Berkeley

COUNTING NOTE

DUAL DELAY GATE - 11X2461 P-2

I. SUMMARY

The Dual Delay Gate 11X2461 P-1 has been packaged in a Nuclear Instrument Module. A Size 2X (2.7 x 8.75" panel) is used. The larger panel size has allowed for two separate delay gates to be packaged in the one module.

This unit is useful for generating delay or gate signals using standard 4 V logic levels.[1] It takes the form of a multivibrator with complementary inputs and outputs. A selector switch allows the multivibrator to be operated in the bistable mode; or one of six monostable positions covering the range 1 μs to 1 s in decade steps. Fine control of the pulse width is obtained from a potentiometer mounted concentric with the selection switch.

Dual "OR" inputs are provided on both the SET and RESET inputs. The multivibrator may also be manually SET or RESET by means of a push-button. A light indicates when the multivibrator is in the SET position. A toggle switch is provided to inhibit signals into the unit; in the OFF position the multivibrator is automatically RESET.

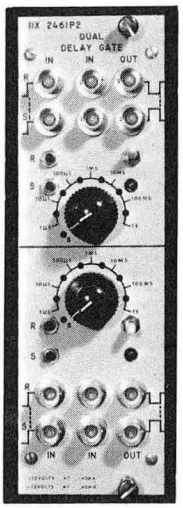

Fig. 1 - Front Panel View of Dual Delay Gate

[1]See CC 5-9 for logic voltage levels.

II. SPECIFICATIONS

Input

Impedance	1 K Ω
"1" level	+4 V
"0" level	-1 V
Min. Width	30 ns
Max. Duty Cycle	90%

Output

Impedance	<50 Ω (50 mA max.)
"1"	4 V
"0"	-1 V
Delay	<15 ns
Rise-time	<15 ns for step input

Delay/Gate Widths

Bistable

1 μs	-	10 μs
10 μs	-	100 μs
100 μs	-	1 ms
1 ms	-	10 ms
10 ms	-	100 ms
100 ms	-	1 s

Power Required

+12 V 140 mA (240 mA max.)	pin 16.
-12 V 20 mA	pin 17.
Ground	pin 34.

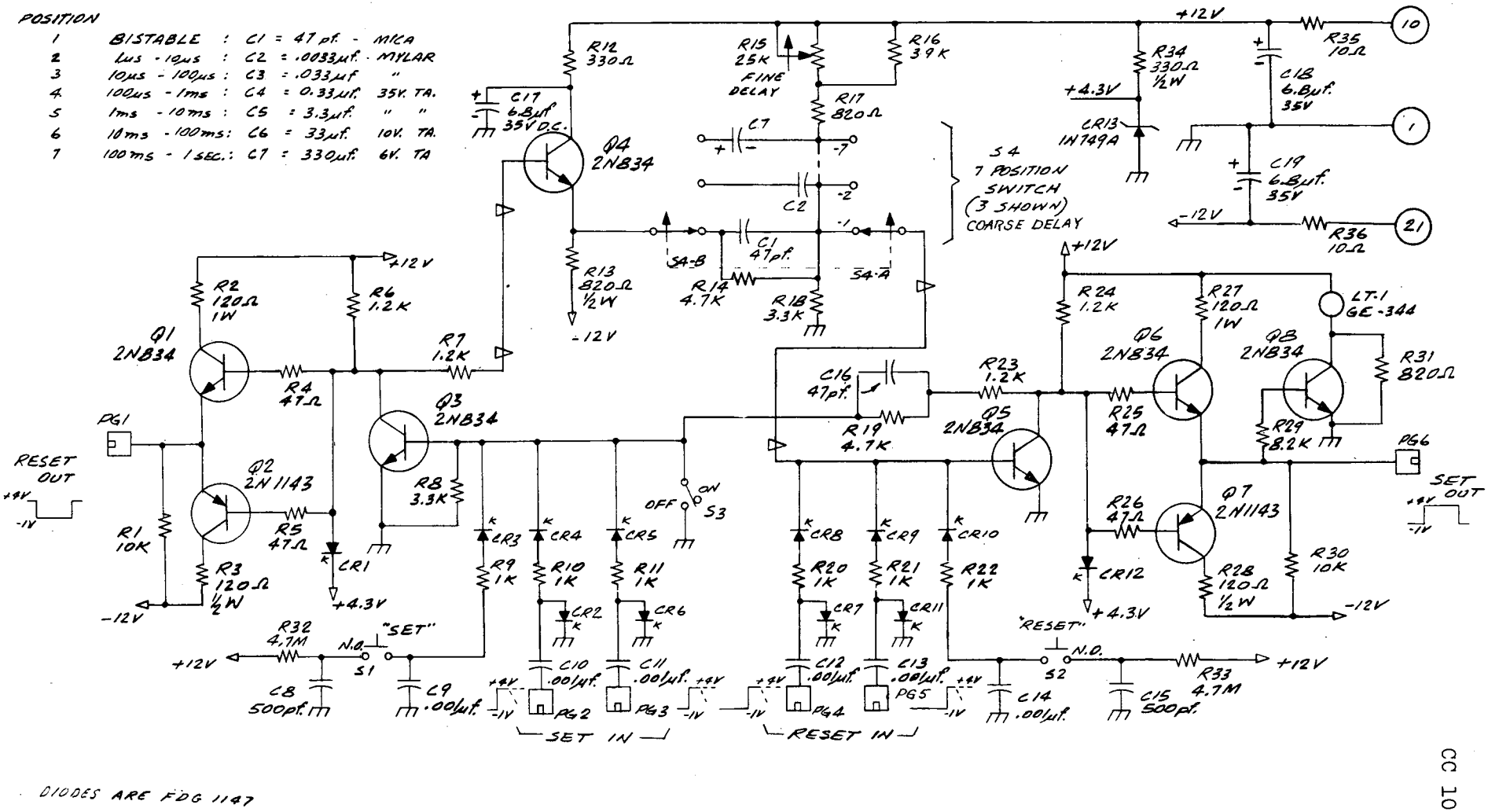

Fig. 2 - Dual Delay Gate Schematic

File No. CC 10-12 (1)
March 15, 1966
H. G. Jackson

Lawrence Radiation Laboratory, University of California, Berkeley

COUNTING NOTE

PULSE GENERATOR - 18X1401 P-1

I. SUMMARY

A general-purpose pulse generator has been packaged in a Nuclear Instrument Module. A Size 2X (2.70 x 8.75" panel) is used.

The basic circuit consists of three dual-two input NOR gates of RTL integrated circuits operated as astable or monastable multivibrators.

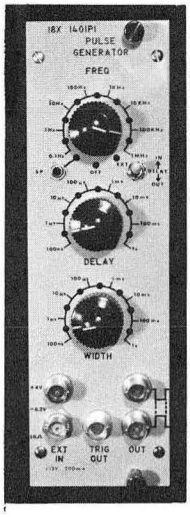

Fig. 1 - Front Panel View of Pulse Generator

Pulse repetition rates are available from 0.1 pps to 10^6 pps in seven decade steps. A fine-frequency control mounted concentric with the selector switch allows the rate to be varied with at least 10% overlap on all ranges. Single-pulse operation can be selected or an external-frequency source can be used.

Two external inputs are provided. One is for the standard +4 V logic level.[1] The other is a 50Ω terminated input for fast narrow negative pulses of 200mV or more in amplitude.

The output pulse can be delayed from 100ns to 1s in seven decade steps. Fine control is made by a concentric potentiometer with at least 10% overlap on all ranges. A toggle switch is provided so that the delay can be easily switched in or out.

[1]See CC 5-9 for logic voltage levels.

The output pulse width selection is also from 100 ns to 1 s in seven decade steps. Fine control is again made by a concentric potentiometer with at least 10% overlap on all ranges.

The trigger output and the output pulse generate the standard +4 V logic level. A complementary output pulse is also provided that is coincident with the normal output pulse. It too generates the standard +4 V logic level, but goes from +4 V to 0 V.

II. SPECIFICATIONS

Ext. Input (1)

Impedance	1 K Ω
Trigger level	+4 V
Pulse width	>20 ns
Rise-time	<100 ns

Ext. Input (2)

Impedance	50 Ω
Trigger level	-200 mV
Pulse width	>2 ns
Rise-time	<20 ns

Trigger Output

Impedance	<50Ω (20 mA max.)
Amplitude	+4 V
Rise-time	<30 ns

Pulse Output

Impedance	<50 Ω (33 mA max.)
Amplitude	+4 V (from Gnd)
Rise-time	<15 ns

Complementary Output

Impedance	<50 Ω (33 mA max.)
Amplitude	-4 V (from +4 V)
Rise-time	<15 ns

Pulse Frequency

Off
Single Pulse
0.1 Hz - 1.0 Hz
1.0 Hz - 10 Hz
10 Hz - 100 Hz
100 Hz - 1 KHz
1 KHz - 10 KHz
10 KHz - 100 KHz
100 KHz - 1 MHz
External

Pulse Delay

100ns - 1μs
1μs - 10μs
10μs - 100μs
100μs - 1ms
1ms - 10ms
10ms - 100ms
100ms - 1s

Pulse Width

100ns - 1μs
1μs - 10μs
10μs - 100μs
100μs - 1ms
1ms - 10ms
10ms - 100ms
100ms - 1s

Power Required

+12 V 200mA	pin 16.
Ground	pin 34.

HGJ/mlr

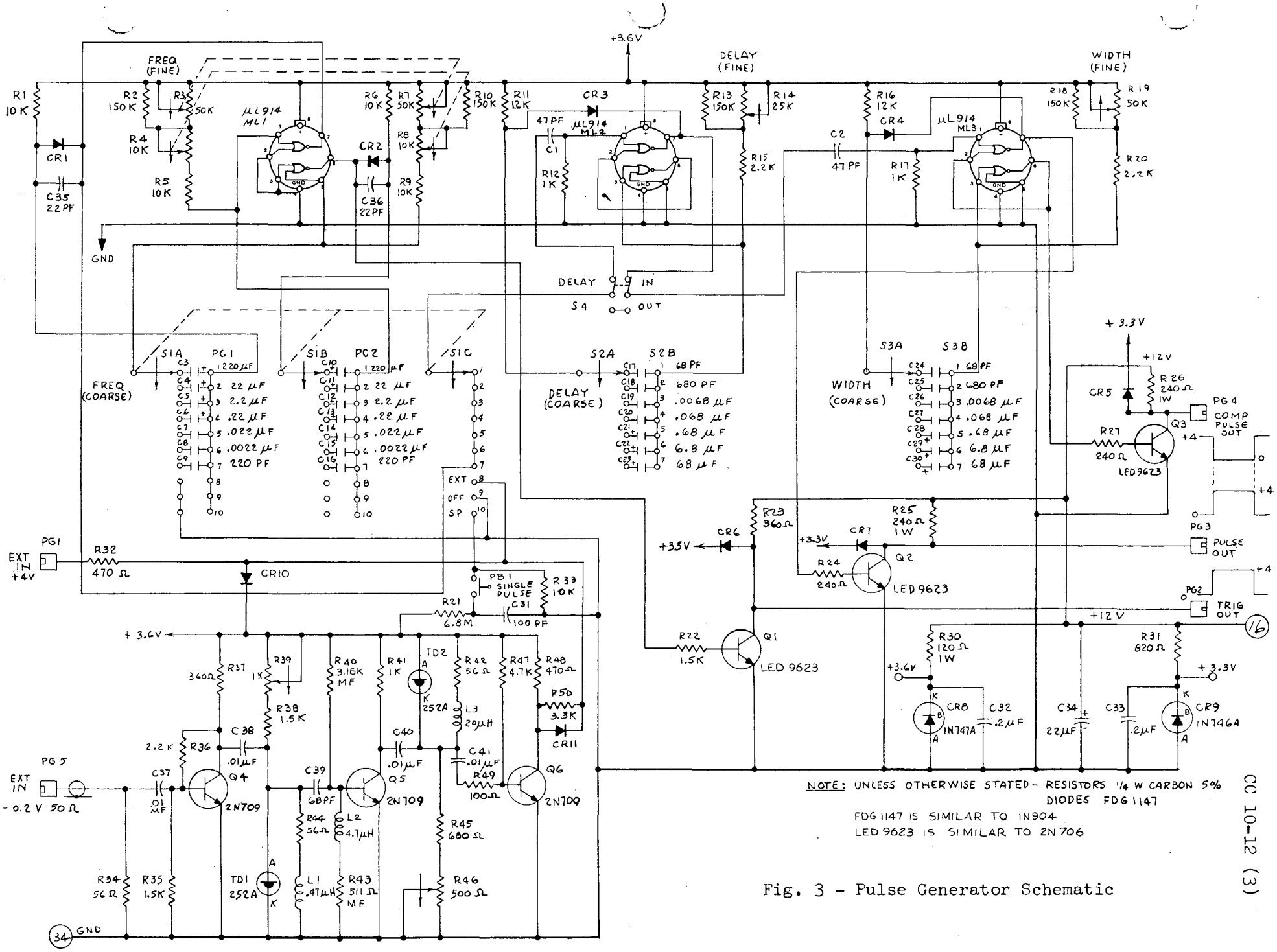

Fig. 3 - Pulse Generator Schematic

File No. CC 10-13 (1)
D. A. Mack
August 3, 1966

Lawrence Radiation Laboratory, University of California, Berkeley

COUNTING NOTE

NUCLEAR INSTRUMENT MODULE BIN

A number of pieces of laboratory and commercial equipment are constructed in Nuclear Instrument Modules (NIM). The 8-3/4" Nuclear Instrument Module Bin is designed to accept any 8-3/4" module and supply essentially all of its power requirements. Fig. 1 shows a front view of the bin.

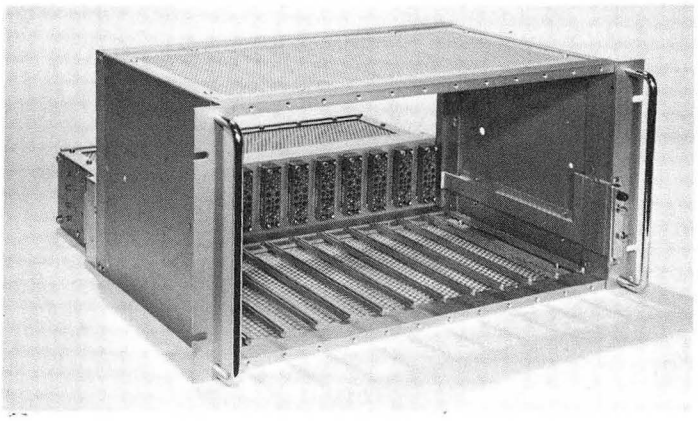

Fig. 1 - Nuclear Instrument Module Bin

Table I lists the power capabilities of supplies presently in use at the Laboratory. Table II lists the buses that have been wired to bins in various stages of progress. Eventually all bins will be modified to correspond to the latest schedule (Type C). The actual voltages available will, of course, depend upon the power supplies that are attached. At present one can depend upon ± 12 and ± 24 volts being available from any of the rear-mounting bin supplies. All other voltages must be supplied from either external or modular supplies.

REFERENCES:

1. TID-20893 (Rev.) Standard Nuclear Instrument Modules
2. UCRL-11702 Instrumentation Module System
3. Power Supply Specifications LRL-98-87

TABLE I

POWER SUPPLIES

Manufacturer	Manufacturer Type No.	Line Filter	Power Output	Line and Load Regulation
Transistor Devices	SPS-305	No	±12, 24V @1 a each	±0.1%
Transistor Devices	SPS-372F	Yes	±12, 24V @1 a each	±0.1%
Power Designs	AEC-320-1	No	±12, 24V @1 a each	±0.1%
Sorensen	MQB-72-1	Yes	±12, 24V @1 a each	±0.1%
Power Designs	AEC-320-2, AEC-320-3	Yes	±12V @2 a ±24V @1 a Total load not to exceed 72W	±0.1%

TABLE II

BIN CONNECTOR WIRING

Pin No.	NIM Specifications		LRL Bin Wiring			
Bin Type		Original	Type A	Type B	Type C	
Bin Wiring Diagram			11X3045 W-2	11x3045 W-3	11X3045 W-3A	
Power Control		Use Power Control Module	Use Power Control Module	Integral Bin Switch	Integral Bin Switch	
1	+3V		+3			
2	-3V					
3	Spare		Logic 1	Logic 1	Logic 1	
4	Reserved					
5	Coax					
6	Coax					
7	Coax					
8	+200V		+200V	+200V	+200V	
9	Spare		+150V	+150V	+150V	
*10	+6V		+6V	+6V	+6V	
*11	-6V				-6V	
12	Reserved					
13	Carry 1		**Carry 1	**Carry 1	**Carry 1	
14	Spare		Advance	Advance	Advance	
15	Reserved		SW AC Power			
*16	+12V	+12V	+12V	+12V	+12V	
*17	-12V	-12V	-12V	-12V	-12V	
18	Spare		Logic 2	Logic 2	Logic 2	
19	Reserved					
20	Spare		**Carry 3	**Carry 3	**Carry 3	
21	Spare		Parity	Parity	Parity	
22	Reserved					
23	Reserved		AC Power in			
24	Reserved		Temp Warn			
25	Reserved		AC Pwr in Neut			

TABLE II Bin Connector Wiring (continued)

26	Spare	***Spare	***Spare	***Spare	***Spare	
27	Spare	***Spare	***Spare	***Spare	***Spare	
*28	+24V	+24V	+24V	+24V	+24V	
*29	-24V	-24V	-24V	-24V	-24V	
30	Spare		Logic 4	Logic 4	Logic 4	
31	Carry 2		**Carry 2	**Carry 2	**Carry 2	
32	Spare	***Spare	***Spare	***Spare	***Spare	
*33	115V		115V	115V	115V	
*34	Power Return Gnd	Power Return Gnd	Power Return Gnd	Power Return Gnd	Power Return Gnd	
35	Reset		Reset	Reset	Reset	
36	Gate		Gate	Gate	Gate	
37	Spare		Logic 8	Logic 8	Logic 8	
38	Coax					
39	Coax					
40	Coax					
*41	115V		115V AC Neut	115V AC Neut	115V AC Neut	
*42	High Quality Gnd	Hi Qual Gnd	Hi Qual Gnd	Hi Qual Gnd	Hi Qual Gnd	
G	Gnd Guide Pin		Chassis Gnd	Chassis Gnd	Chassis Gnd	

More detailed connector pin assignments are given on AEC Committee on Nuclear Instrument Modules Drawings NC 514 and 522.

* Must be bused to all connectors PG1B through PG12B.

** Carry 1 on bin connector PG1 (right connector viewed from front) is connected to Carry 2 on PG1 and Carry 3 on PG3. Carry 1 on PG2 duplicates the pattern on PG3 and PG4 and so on.

*** Spare pin positions are available but have not been bused in.

October 1, 1966

INDEX

	Section
Amplifiers	
Nanosecond Pulse Amplifiers, Summary	CC 1-2A
Evaluation of HP 460A and B	CC 1-4
Logic Amplifier 20 V Output	CC 1-6
Pulse	CC 1-7
Dual 1ns DCx10 Amplifier	CC 1-8
Spark Gap Trigger Amplifier	CC 6-5A
Attenuators	
Nanosecond	CC 2-6B
Cables	
Coaxial, Pulse Response	CC 2-1B
Coaxial, Physical Characteristics	CC 2-2C
Coincidence Systems	
Dual 3-Channel, Model 3	CC 3-10A
Time-to-Height	CC 3-15
4-Way "AND", 1" INHIBIT	CC 3-12
5-Way "OR"	CC 3-13
5-Way Fanout	CC 3-14
5-Way Fanout	CC 3-16
Components for Amplitude Analysis	
Summary, Pulse Height Analyzer Manufacturers' Data	CC 4-6
Definitions	
Logical Voltage Levels	CC 5-9A
Performance	CC 5-6
Phototubes	CC 5-8A
Pulse Terms	CC 5-7
Del-a-gate	CC 10-5
Delay Units	
Delay Gate	CC 10-6
Discriminators	
Pulse Amplitude, Models 2 and 3	CC 3-11
Radiation Laboratory Types	CC 3-5B

	Section
Electronic Circuits for Spark Chambers	
Energy Distribution Box	CC 6-6
High Voltage Probe for Nanosecond Pulses	CC 6-7
Spark Gap Trigger Amplifier	CC 6-5A
15kv 20ma Spark Chamber Booster Supply	CC 6-8
Gate and Delay Units	
Delay Gate	CC 10-6
Light Pulser	CC 8-30
Corona	CC 8-31
Photomultipliers	
Corona Light Pulsers	CC 8-31
Gating, Electrical	CC 8-20
Light Pulses for	CC 8-30
Manufacturers' Data	CC 8-2C
Measuring Techniques	CC 8-3B
6810 Class, Special Characteristics	CC 8-4A
Probe	
High Voltage Probe for Nanosecond Pulses	CC 6-7
Pulse Height Analyzers	
Summary of Manufacturers' Data	CC 4-6
Pulser	
Corona Light	CC 8-31
Gated	CC 10-4
Light, for Photomultiplier Tube Testing	CC 8-30
Mercury	CC 10-1
Nanosecond	CC 10-3
Pulse Generators	CC 10-8
Pulse Generators	CC 10-9
Register	CC 9-9
Scalers	
Decade Scaler, Model 5	CC 9-8A
Decade Scaler and Readout System	CC 9-10
Operating Characteristics	CC 9-5C
10 MHz Decade Scaler	CC 9-11

	Section
Scintillation Counters	
Particle Detection by Scintillation Counters	CC 8-5A
Terminators	
Nanosecond	CC 2-6B
Transformers, Pulse	
Nanosecond	CC 2-6B
Waveform Generators & Power Supplies	
Del-a-gate	CC 10-5
Delay Gate	CC 10-6
Gated Pulse Generator	CC 10-4
High-Voltage Power for Multiplier Phototubes	CC 10-10A
Mercury Pulsers	CC 10-1
Nanosecond Pulse Generator	CC 10-3
Pulse Generators	CC 10-8
Pulse Generator	CC 10-9
Relay Driver	CC 10-7
Dual Delay Gate	CC 10-11
Pulse Generator	CC 10-12
Nuclear Instrument Module Bin	CC 10-13