UCRL 3342

UNIVERSITY OF CALIFORNIA

Radiation Laboratory

TWO-WEEK LOAN COPY

This is a Library Circulating Copy which may be borrowed for two weeks. For a personal retention copy, call Tech. Info. Division, Ext. 5545

BERKELEY, CALIFORNIA

DISCLAIMER

This document was prepared as an account of work sponsored by the United States Government. While this document is believed to contain correct information, neither the United States Government nor any agency thereof, nor the Regents of the University of California, nor any of their employees, makes any warranty, express or implied, or assumes any legal responsibility for the accuracy, completeness, or usefulness of any information, apparatus, product, or process disclosed, or represents that its use would not infringe privately owned rights. Reference herein to any specific commercial product, process, or service by its trade name, trademark, manufacturer, or otherwise, does not necessarily constitute or imply its endorsement, recommendation, or favoring by the United States Government or any agency thereof, or the Regents of the University of California. The views and opinions of authors expressed herein do not necessarily state or reflect those of the United States Government or any agency thereof or the Regents of the University of California.

UCRL-3342

UNIVERSITY OF CALIFORNIA
Radiation Laboratory
Berkeley, California

Contract No. W-7405-eng-48

A HIGH-CURRENT ION INJECTOR

William A. S. Lamb and Edward J. Lofgren

March 19, 1956

Printed for the U. S. Atomic Energy Commission

A HIGH-CURRENT ION INJECTOR

William A. S. Lamb and Edward J. Lofgren
Radiation Laboratory, University of California
Berkeley and Livermore, California

March 19, 1956

ABSTRACT

An ion injector is described which is capable of continuous currents of protons or deuterons of 3/4 ampere at 100 kv or pulsed currents of 2 amperes at a 20% duty cycle. The beam comes to a focus about 3 inches in diameter and diverges at an angle of ± 5°. It is approximately 95% atomic ions.

A HIGH-CURRENT ION INJECTOR

William A. S. Lamb and Edward J. Lofgren
Radiation Laboratory, University of California
Berkeley and Livermore, California

March 19, 1956

A program of development of high-intensity accelerators has been under way at the University of California Radiation Laboratory, and as part of that program, an ion injector capable of producing currents in the ampere range at 100 kev has been built.[1] Although the primary purpose of the device was injection into a linear accelerator, it has also been used separately as a low-voltage high-intensity accelerator of either protons or deuterons.

The ion source is a low-voltage hot-cathode hydrogen discharge located on the axis of a solenoidal magnet. The source is at positive potential with respect to ground. A cylindrical electrode attached axially to the source and another grounded one form the extraction and acceleration system. The ions drift out of the discharge region through holes in the anode and form a concave plasma sheath inside the high-voltage electrode. The grounded electrode is surrounded by a magnetic lens, which in combination with the concave sheath produces a crude focus at about 40 inches. In some cases a grid has been placed in the grounded electrode, increasing the field gradient at the sheath and resulting in the largest currents. However, the grid may be used only at reduced duty cycle, because of heating and sparking.

Figure 1 is a cross-section diagram of the injector, and Fig. 2 is a photograph of the entire unit with the top plate of the vacuum tank lifted up. The source is supported from the top plate of a steel vacuum tank by three cylindrical porcelain bushings, which also serve to introduce the power, cooling, and gas lines for magnet and arc. These items and the associated metering are all isolated at high voltage. The source magnet is a water-cooled solenoid, 5 inches i.d. and 12 inches long, providing a maximum field of 7000 gauss on the axis. It is in a steel case, which serves both as a vacuumtight container and a flux-return path. The arc chamber, which is shown in Fig. 3, is a water-cooled cylindrical shell made of copper, with a detachable plate at the anode end. This plate, called the arc aperture, is perforated with twelve 1/8-inch-diameter holes in a circular pattern of 3/4-inch radius, and is water cooled.

---

[1] E. O. Lawrence, "High Current Accelerators," Science 122, 1127-1132 (1955).

It has an insert of tungsten 0.5 inch in diameter and 2 inches in the center. The tungsten provides a refractory target for secondary electrons, which are emitted from the ground structure by proton bombardment and accelerated toward the source. The arc chamber is so located in the solenoid as to place the arc in the strongest part of the field. The cathode is a single turn of 3/32-inch-diameter tungsten rod clamped to water-cooled copper blocks which are insulated from the arc chamber for the arc potential. The cathode, the magnetic field, and the arc aperture must be in accurate axial alignment because the discharge is highly collimated by the strong magnetic field. Gas is admitted to the arc chamber through a palladium-tube hydrogen leak, and the pressure is measured by a thermocouple gauge. The pumping restriction at the arc aperture is sufficient so that a pressure in the range of 10^{-2} mm Hg is maintained in the arc chamber while the tank pressure is in the range of 10^{-5} mm Hg.

The high-voltage electrode consists of a heavily water-cooled cylinder, usually 5 inches i.d. and about 4 inches long. The size of this electrode is important in determining the shape of the ion-extracting and -accelerating field, and many variations are possible, depending upon the focal properties required. The ground electrode and its solenoid form the other half of the extracting and accelerating system. This solenoid can provide a maximum field of 1500 gauss. The entire ground-electrode assembly is mounted on a mechanism that is movable from outside the vacuum to permit alignment of the electrodes. An additional magnetic lens, called the focusing magnet, may be placed beyond the ground electrode to focus the extracted beam. It is 6 inches in diameter and 16 inches long, and produces a maximum field of 8000 gauss.

The vacuum system consists of two 20-inch mercury diffusion pumps with liquid nitrogen baffles, which results in a combined net speed of about 3000 liters of air per second in the 10^{-5} mm pressure range. The operating pressure is normally around 1.5×10^{-5} mm mercury, and the ultimate vacuum is 2 to 3×10^{-6} mm mercury. Oil diffusion pumps were originally used but later replaced with mercury pumps. This change resulted in marked decrease in bake-out time and spark rate.

A grid made of strips of graphite arranged in a radial pattern may be inserted into the grounded electrode. It results in a greater beam intensity with a somewhat worse focus. Heating of the grid limits such operation to pulsing on a 20% duty cycle.

A block diagram of the electrical circuits (with their ratings) is given in Fig. 4. The high-voltage power supply and the ion-source auxiliaries that are biased by that supply are capable of operating on a pulsed or continuous duty cycle. The duty cycle information is telemetered to the high-voltage power supplies by means of a radiofrequency trigger pulse unit. The adjustment of all of the high-voltage variables is accomplished through isolation transformers and induction regulators. Accurate metering of the circuits biased at the accelerating potential is provided by mounting the necessary meters and oscilloscopes in a shielded high-voltage cage.

The various operating parameters have been subject to wide variation in working up to "best" performance. In Table I are listed typical values of the parameters for the largest beams that can be maintained for hours. Beams about two-thirds as great can be maintained day after day. Column "A" refers to continuous operation with protons and without a grid in the grounded electrode. Column "B" refers to proton operation in pulses of 25 milliseconds 7.5 times a second, using a grid, but no focusing magnet. The maximum beam of deuterons is about 10% less than the proton beam. The accelerating voltage may be varied from 35 kv to 140 kv. From 35 kv to 100 kv the current is approximately proportional to voltage. Above 100 kv the beam is reduced because of power-supply limitations. The beam current is measured by a shielded, water-cooled collector cup. The electrical measurements have been verified by calorimetric measurements on the cooling water.

The ionic composition of the beam has been measured with a magnetic analyzer. Typically, the beam is 95% protons or deuterons, the balance being molecular ions and singly charged mass-three ions.

A large number of people have participated in the development and testing of this injector over a period of about four years, starting in March 1950. Substantial contributions were made by Paul Byerly, Bruce Cork, Warren Chupp, John Foster, W. H. Gust, R. E. Hester, and John Rempel. R. B. Meuser was the mechanical engineer, and much of the superior electromechanical design is due to him.

This work was done under the auspices of the U. S. Atomic Energy Commission.

Table I

Parameters for operation of ion injector at largest beam that can be maintained over periods of hours. Data for proton operation (maximum deuteron beam about 10% smaller).

	A Continuous operation. No grid.	B Pulsed operation. Ground electrode grid used.
Beam current	3/4 ampere at 100 kv	~2.0 amperes at 100 kv.
Beam diameter	<3 inches, measured 70" from the source.	<4 inches, measured 20" from the source.
Beam divergence, 1/2 angle	$<5^{\circ}$	$\sim 10^{\circ}$
Accelerating power-supply current	1.1 amperes	~4.0 amperes
Arc chamber hydrogen pressure	50 μ Hg	20 μ Hg
Arc voltage	35 volts	150 volts
Arc current	80 amperes	125 amperes
Source magnet	3200 gauss	6000 gauss
Ground electrode magnet	200 gauss	800 gauss
Focusing magnet	3000 gauss	None
Vacuum tank pressure	2×10^{-5} mm Hg	2×10^{-5} mm Hg

FIGURE CAPTIONS

Fig. 1. Schematic cross section of the ion injector.

Fig. 2. Ion injector with top plate of vacuum tank lifted to show source structure.

Fig. 3. Arc chamber and cathode assembly.

Fig. 4. Block diagram of electrical circuits.

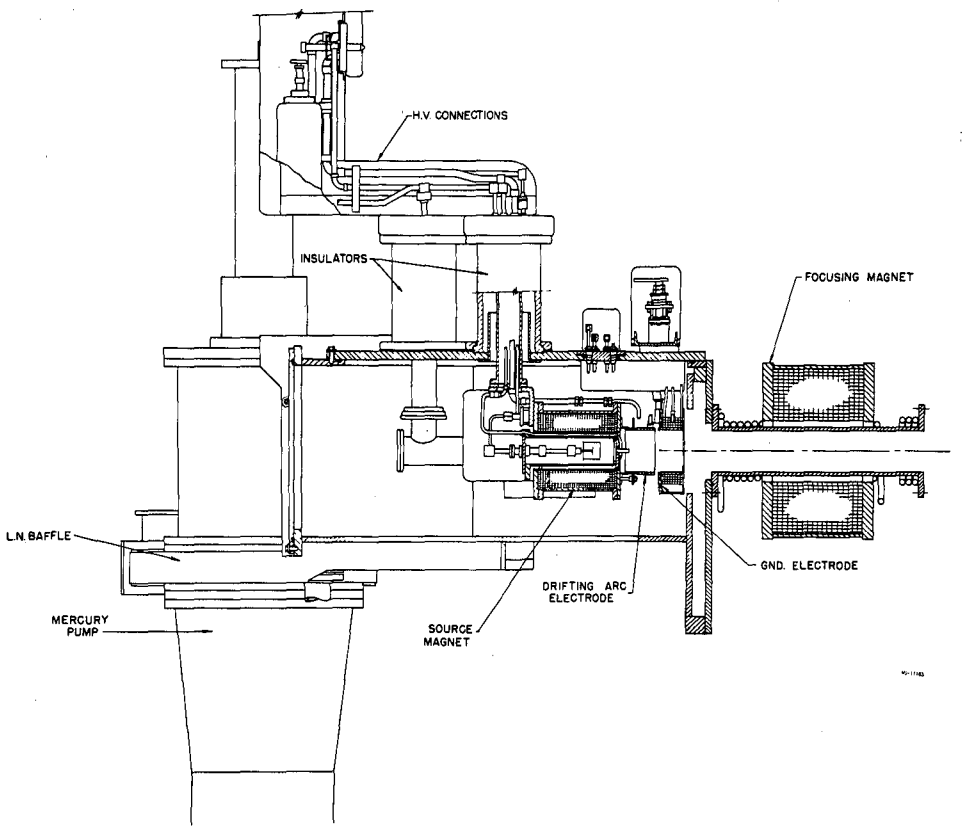
H.V. CONNECTIONS
INSULATORS
FOCUSING MAGNET
L.N. BAFFLE
GND. ELECTRODE
DRIFTING ARC ELECTRODE
MERCURY PUMP
SOURCE MAGNET

Fig. 1

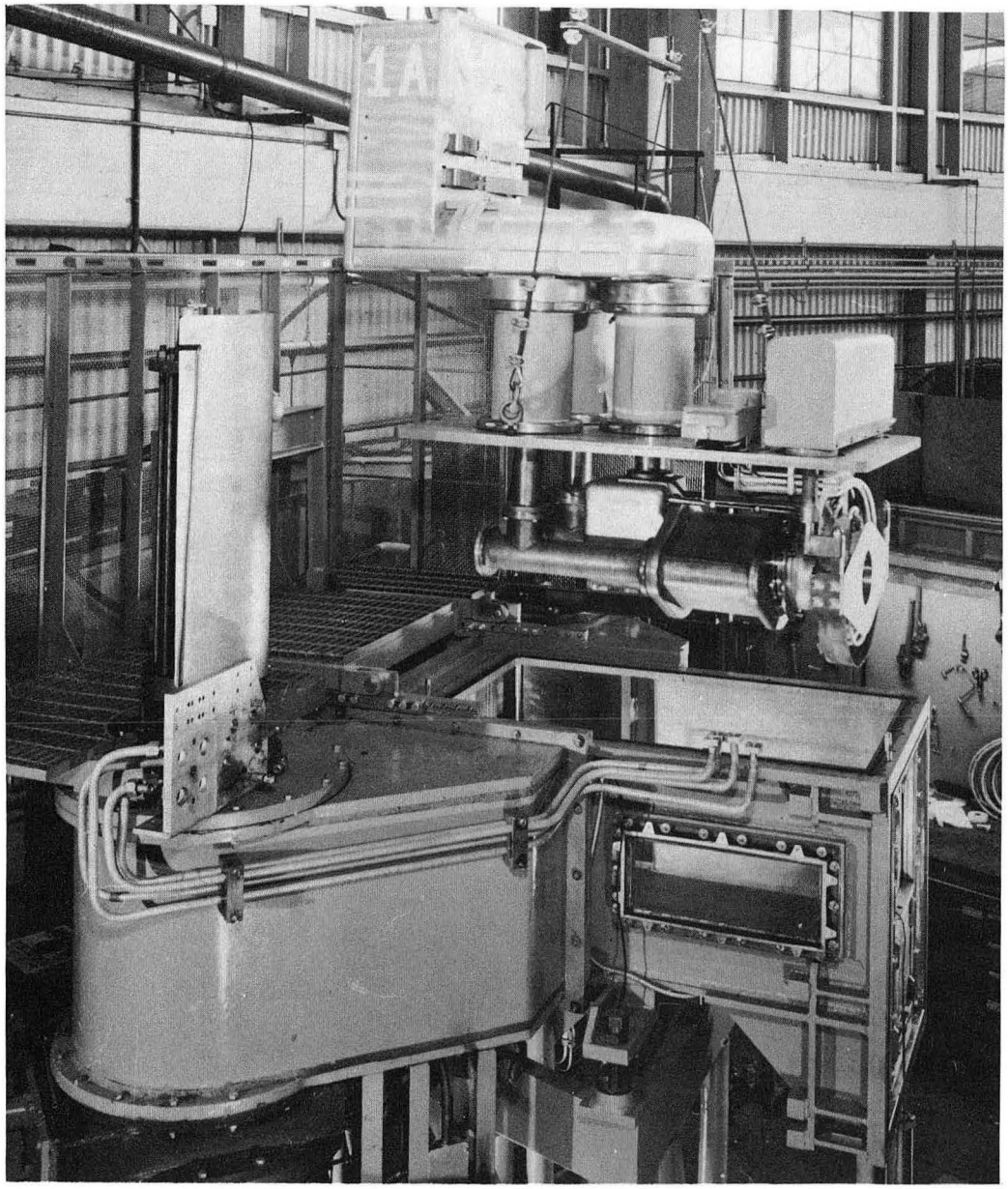

ZN 232

Fig. 2

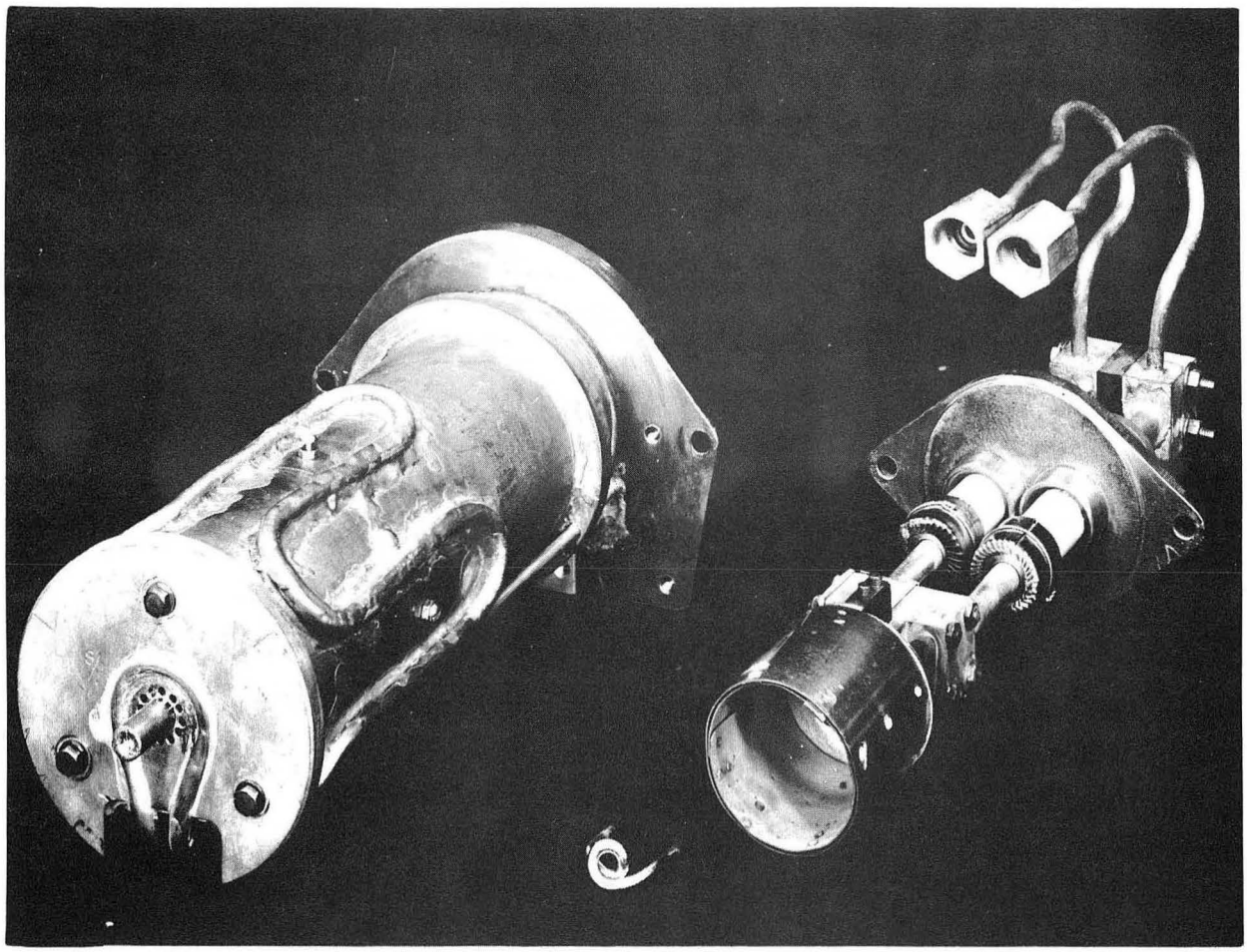

ZN-1483

Fig. 3

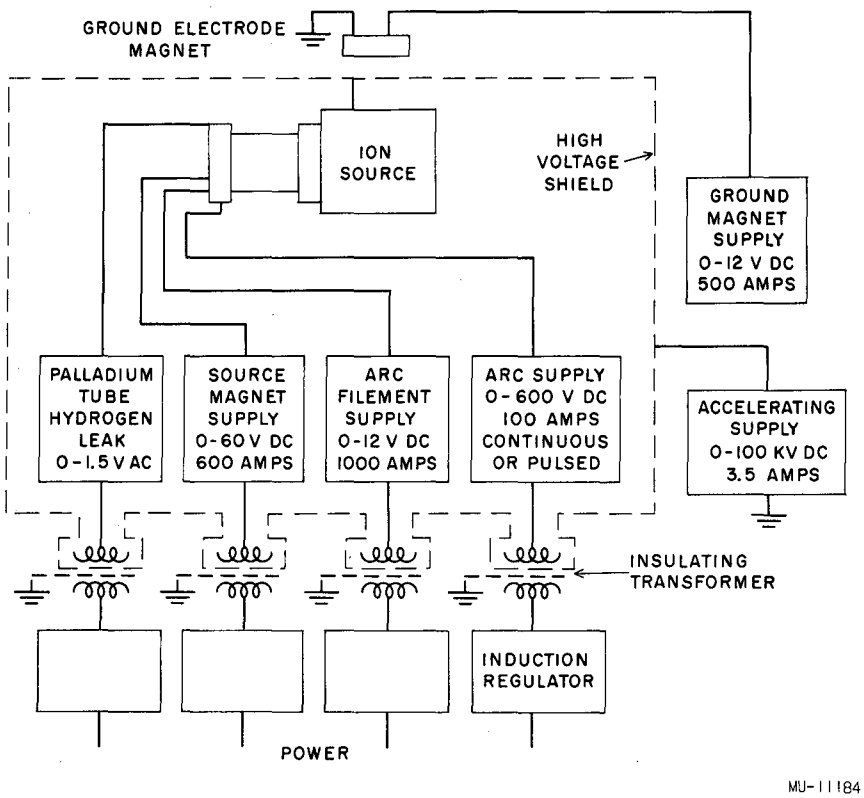
GROUND ELECTRODE
MAGNET
ION
SOURCE
HIGH
VOLTAGE
SHIELD
GROUND
MAGNET
SUPPLY
0-12 V DC
500 AMPS
PALLADIUM
TUBE
HYDROGEN
LEAK
0-1.5 V AC
SOURCE
MAGNET
SUPPLY
0-60 V DC
600 AMPS
ARC
FILEMENT
SUPPLY
0-12 V DC
1000 AMPS
ARC SUPPLY
0-600 V DC
100 AMPS
CONTINUOUS
OR PULSED
ACCELERATING
SUPPLY
0-100 KV DC
3.5 AMPS
INSULATING
TRANSFORMER
INDUCTION
REGULATOR
POWER
MU-11184

Fig. 4