UCRL - 336

UNIVERSITY OF CALIFORNIA

Radiation Laboratory

For Reference

Not to be taken from this room

BERKELEY, CALIFORNIA

DISCLAIMER

This document was prepared as an account of work sponsored by the United States Government. While this document is believed to contain correct information, neither the United States Government nor any agency thereof, nor the Regents of the University of California, nor any of their employees, makes any warranty, express or implied, or assumes any legal responsibility for the accuracy, completeness, or usefulness of any information, apparatus, product, or process disclosed, or represents that its use would not infringe privately owned rights. Reference herein to any specific commercial product, process, or service by its trade name, trademark, manufacturer, or otherwise, does not necessarily constitute or imply its endorsement, recommendation, or favoring by the United States Government or any agency thereof, or the Regents of the University of California. The views and opinions of authors expressed herein do not necessarily state or reflect those of the United States Government or any agency thereof or the Regents of the University of California.

UNIVERSITY OF CALIFORNIA
Radiation Laboratory

Cover Sheet
Do not remove

INDEX NO. UCRL-336
This document contains 22 pages
and 4 plates of figures.
This is copy 15 of 17 Series B

DECLASSIFIED

Issued to Info. Division

[redacted]
Classification

Each person who receives this document must sign the cover sheet in the space below

Route to	Noted by	Date	Route to	Noted by	Date

DECLASSIFIED

UNIVERSITY OF CALIFORNIA

Radiation Laboratory

Contract No. W-7405-eng-48

NEPTUNIUM(V) CHLORIDE AND OXYCHLORIDES

Theodore J. LaChapelle, Jr.

May 24, 1949

Berkeley, California

DECLASSIFIED

Declassification Distribution	Copy Nos.
Declassification Officer, Oak Ridge	1-4
Publication Officer, Oak Ridge	5
Patent Department	6-7
Area Manager	8
Information Division	9
Total	9

Neptunium(V) Chloride and Oxychlorides

Theodore J. LaChapelle, Jr.
Radiation Laboratory, University of California*
Berkeley, California

DECLASSIFIED

ABSTRACT

Theoretically neptunium in the plus 5 oxidation state might be expected to form the pentachloride ($NpCl_5$), oxychlorides ($NpOCl_3$ and NpO_2Cl), and hydrated oxychlorides. By direct evaporation of Np(V) from dilute hydrochloric acid solutions, compounds having Cl/Np ratios varying between 1.4 and 2.8 have been prepared. The preparations are believed to be mixtures of the two oxychlorides. Treatment of the above materials with carbon tetrachloride and with chlorine at various temperatures between 110 and 600° C has resulted in the preparation of several apparently new compounds containing Np(V) and chlorine. Of these, a red sublimate might be $NpCl_5$ in view of the similarity of its x-ray diffraction pattern with those of $CbCl_5$ and $TaCl_5$. Various yellow, gray, and green residues might be oxychlorides. Neptunium(V) oxychloride does not seem to be stable at 400° C in a vacuum of 10^{-4} mm or at 600° C under 760 mm pressure of chlorine.

A new Np(V) absorption spectrum peak has been located at 10980 A in the near infrared. The molar extinction coefficient is about 21 for 0.014 M Np(V) in 0.2 M HCl solution.

Potentiometric micro-titration apparatus for the determination of microgram quantities of chloride by titration with silver nitrate solution is described.

* Now at University of California at Los Angeles, Los Angeles, California

For: DECLASSIFICATION
5/21/49.

Neptunium(V) Chloride and Oxychlorides

Theodore J. LaChapelle, Jr.
Radiation Laboratory, University of California*
Berkeley, California

DECLASSIFIED

I. INTRODUCTION

The chemistry of neptunium, element number 93, was first investigated by its discoverers, McMillan and Abelson,[1] in 1940. This work was carried out on solutions containing only trace (about 10^{-15} molar) concentrations of the 56-hour beta-emitting isotope $_{93}Np^{239}$. It was shown that neptunium had at least two oxidation states, the lower being precipitated with rare earth fluorides, and the upper with sodium uranyl acetate. Further studies have been carried out on a trace scale by a number of other investigators.[2]

Before 1940, actinium, thorium, protactinium, and uranium were generally considered to be members of the subgroups III, IV, V, and VI. After the discovery of transuranium elements and the study of their chemical properties, the suggestion was made by Seaborg[3] that elements 89-103 may be members of an "actinide" series in which progressive filling of the 5f shell occurs. This name was given in analogy to the "lanthanide" earths, elements 57-71, which similarly add 4f electrons. The recent discovery[4] and investigation of the properties of elements 95 (americium) and 96 (curium) have strengthened the "actinide" hypothesis. The early members of the new series ($_{90}Th$, $_{91}Pa$) are quite similar to the first members ($_{72}Hf$, $_{73}Ta$) in the 5d transition series; however, this comparison breaks down rapidly since the later members ($_{93}Np$, $_{94}Pu$, $_{95}Am$, $_{96}Cm$) show little or no resemblance to the corresponding 5d

*Now at University of California at Los Angeles, Los Angeles, California.

elements ($_{75}Re$, $_{76}Os$, $_{77}Ir$, $_{78}Pt$).

Discovery of the long-lived alpha-emitting isotope $_{93}Np^{237}$ by Wahl and Seaborg[5] in 1942 made feasible the study of neptunium chemistry on a visible scale. This isotope is the decay product of the previously known[6] seven-day beta-emitting $_{92}U^{237}$, which is formed as a result of an (n,2n) reaction on $_{92}U^{238}$. Naturally-occurring uranium consists[7] mainly of the latter isotope.

Magnusson and LaChapelle[8] first isolated neptunium as a pure compound, NpO_2, using 45 micrograms of the long-lived isotope. The major source of this first macro amount of neptunium was some uranium metal which had been bombarded by fast neutrons produced by a cyclotron. The identification of the neptunium(IV) dioxide was established by Zachariasen [9] through the use of x-ray diffraction. With the same neptunium the following experimental data were gathered: The existence of a plus 6 oxidation state of neptunium was determined by the preparation[10] and x-ray identification[11] of sodium neptunium(VI) dioxytriacetate. By the method of weighing and radiometric assay of samples of neptunium dioxide, the specific alpha activity of $_{93}Np^{237}$ was calculated[8] to be 1520 $\pm$ 76 disintegrations minute^{-1} microgram^{-1} with the corresponding half-life of (2.20 $\pm$ 0.11) x 10^6 years. The range of the alpha particle was measured[12] as 3.28 $\pm$ 0.05 cm of air at 15° C and 760 mm, corresponding to an energy of 4.78 Mev.

After the Hanford chain-reacting pile had begun operation, a scheme of separation was worked out to recover some of the neptunium produced and to purify[13] it. About one milligram of the pure isotope was isolated from this source at first. This material was used to establish[14] the existence and the conditions of stability of the plus 4, plus 5, and plus 6 states of neptunium in aqueous solutions; to determine[15,16] the absorption spectra of the plus 3, plus 4, plus 5, and plus 6 oxidation states; to investigate[17] the oxidation potentials of the various neptunium couples; and to prepare[18] and examine a number of compounds.

Later Hanford runs gave neptunium separations amounting to hundreds of milligrams. Much of this material was used for continuation[19] of the above work; part of it was the source of the neptunium used for obtaining the data reported in this paper.

Neptunium is unusual among the transprotactinium elements in that it possesses a stable plus 5 oxidation state in dilute acid solutions. The oxidation potentials[17] for the neptunium couples in hydrochloric acid are given in Fig. 1.

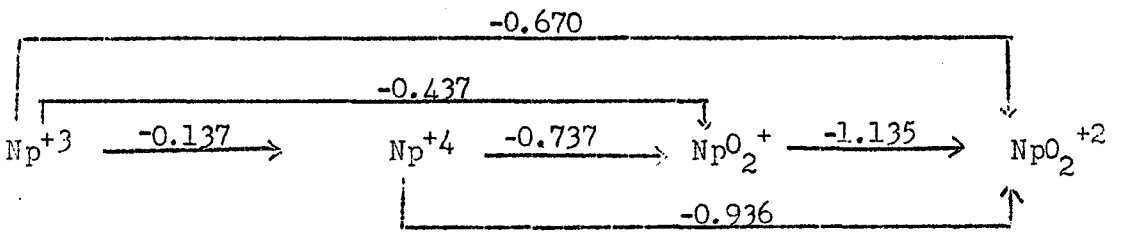

Fig. 1. Formal oxidation potentials for the neptunium couples in 1 M HCl solution at 25° C.

The formulae given for the various oxidation states are based on several considerations. The salt, sodium neptunium(VI) dioxytriacetate, having the formula $NaNpO_2(OOCCH_3)_3$ can be precipitated[10] from solutions of Np(VI). The corresponding uranyl ion is known to be UO_2^{+2}. It has been shown that in one molar mixed $NaNO_3$ - HNO_3 solutions of varying acidity the Np(V) - Np(VI) couple is essentially independent of acid concentration. The absorption spectra[15] of Np(V) and Np(VI) are the same in nitric acid and in hydrochloric acid solutions, having a low peak at 6130 A and a high sharp peak at 9830 A; there is no spectral evidence for complex formation of Np(V). The hydrogen ion concentration dependence[20] of the Np(IV) - Np(V) couple is greater than third power. Other analogies[21] from comparison of uranium, neptunium, and plutonium ions in solution also indicate that the formulation of ions as given is essentially correct.

Prior to the work reported in this paper, solutions of Np(V) in nitric, hydrochloric, perchloric, and sulfuric acids were known, and a solid containing

Np(V) had been precipitated[13] from hydroxide solutions. This solid gave a distinctive x-ray diffraction pattern that could not be interpreted; however, upon dissolution the characteristic absorption spectrum of Np(V) was produced. An attempt[22] to prepare $NpCl_5$ by reacting $NpCl_4$ with chlorine at 500° C was unsuccessful. No solid Pu(V) halides are known. Uranium, on the other hand, forms UF_5 and UCl_5. Evers[23] has reported the possible synthesis of the oxychloride, $UOCl_3$. Thermodynamic calculations by Brewer, Bromley, Gillis, and Lofgren[24] indicate that the compounds NpF_5 and $NpCl_5$ should be stable. The estimated heat of formation for $NpCl_5$ was given as -246 ± 2 kcal. per mole at 298° K, and the compound was calculated to have a decomposition chlorine pressure of less than 10^{-3} atm. at 500° K, with one atmosphere at 800-900° K (near the boiling point).

The purpose of this research was to investigate the chloride and oxychlorides of the plus 5 oxidation state of neptunium. Since the Np(V) ion in dilute hydrochloric acid solution appears to be best indicated by the formula NpO_2, the chloride obtained by direct evaporation might be neptunium(V) dioxymonochloride, NpO_2Cl, or some hydrate, $NpO_2Cl \cdot xH_2O$. This type compound should show a Cl/Np ratio of one when analyzed for both elements. In a high acid concentration a second form of Np(V) might exist due to the following equilibrium:

$$NpO_2^+ + 2H^+ \rightleftharpoons NpO^{+3} + H_2O \qquad (1)$$

Evaporation of a hydrochloric acid solution containing NpO^{+3} ions should give rise to neptunium(V) monoxytrichloride, or a hydrate, $NpOCl_3 \cdot xH_2O$. The Cl/Np ratio of such a compound would be three. By treating a completely dehydrated neptunium(V) oxychloride with a gaseous chlorinating agent at the proper temperature, it might be possible to prepare the pentachloride, $NpCl_5$. Here the Cl/Np ratio would have a value of five.

An analysis to determine Cl/Np ratio should indicate the type of compound prepared. In addition, the x-ray diffraction pattern might be used as a basis for comparing the material with some compound whose structure is known or for working out an unknown crystalline arrangement. When comparing similar compounds the metal atoms involved must be approximately the same size. Using the known relationships[25] between atomic size, atomic number, and valence, one can estimate the Np(V) ionic radius as approximately 0.75 A. The solid pentachlorides UCl_5, $MoCl_5$, WCl_5, $CbCl_5$, and $TaCl_5$ might prove useful for purposes of analogy, although the crystal structure of none has been analyzed. The last two have been investigated by Skinner and Sutton[26] in the gaseous form only. Among the few comparable oxychlorides are $CbOCl_3$, $TaOCl_3$, and TaO_2Cl.

II. EXPERIMENTAL

Materials

The neptunium used was pure $_{93}Np^{237}$ with less than 0.01 percent by weight of $_{94}Pu^{239}$ as the only important impurity[13]. Barnstead-distilled water was used. All acids used were Merck's reagent grade (suitable for microanalysis). All other chemicals were either chemically pure or of reagent grade quality. Chemically pure carbon tetrachloride (Merck's) was dried over anhydrous calcium chloride. After the flask was attached to the vacuum system, the air was removed by the following procedure: The liquid was frozen, exposed to high vacuum for several minutes, the vacuum was cut off, and the solid was allowed to melt. This process was repeated several times. Pure tank chlorine (Mathieson Chemicals) was dried by bubbling through concentrated sulfuric acid, and passing over anhydrous calcium chloride and anhydrous aluminum chloride.

Apparatus

Weighings for standard solutions were made on a key-board-type Ainsworth semi-micro balance located on a vibration-free table. The latter was of reinforced concrete resting on pads of Permacell(U.S.Rubber Company) sponge rubber.

The early runs (1-3) were made on the all-Pyrex vacuum arrangement shown in Fig. 2-A. Later runs 4-6 were made with the same apparatus shown in Fig. 2-A except for that portion enclosed within the dashed line (See Fig. 2-B). A third arrangement (runs 7-14) employed the apparatus common to Fig. 2-A, but with the dashed line area as shown in Fig. 2-C. The explanation of the symbols is as follows:

A) Vacuum source, consisting of a single stage silicone oil diffusion pump connected to a Welch Duo-seal mechanical pump.

B) Second liquid nitrogen trap(50 mm x 250 mm) used for protecting vacuum pumps.

C) Ionization gauge.

D,F,I,J,K,T,Z,CC,HH,JJ) Mercury-seal vacuum stop-cock.

E) First liquid nitrogen trap (50 mm x 250 mm) used for trapping condensable gases.

G) Drying column consisting of (bottom to top) a glass wool plug, potassium hydroxide pellets, size four mesh Drierite (anhydrous calcium sulfate), and another glass wool plug.

H) Inlet for air dried by anhydrous calcium chloride and phosphorus pentoxide.

L) Mercury vacuum gauge.

M) Ground glass joint (19/38), Apiezon W seal.

N) Evaporation cell made from a 10 mm vacuum stopcock.

O) Movable nickel finger for scraping bottom of reactor; pointed nickel rod cemented to a brass bellows sealed into a 12/5 spherical ground glass joint which is used for removing the finger and introducing solutions.

P) X-ray capillary tube having 20-30 micron wall thickness.

Q) Water bath for keeping evaporating solution at room temperature.

R) Sealed flask containing carbon tetrachloride.

S,U,Y,AA) Trap to catch stopcock grease diluted by carbon tetrachloride.

V,BB) Bourdon-type vacuum gage (0-30 inches).

W) Resistance-wire furnace.

X) Glass-wool trap for volatilized product.

DD) Liquid nitrogen trap to condense gaseous carbon tetrachloride.

EE) Leeds and Northrup iron-constantan thermocouple wire touching inside of thermocouple well.

FF) Removable (24/40 ground glass joint) combination thermocouple well and support for reaction thimble.

GG) Removable combination reaction thimble and titration cell.

II) Liquid nitrogen trap for freezing out carbon tetrachloride or chlorine.

KK) Reaction cell having a 24/40 ground glass joint at one end, an x-ray capillary at the other, with an indentation between the two to hold evaporating solutions.

LL) Mica heat shield.

MM) Cylindrical solid copper furnace having a nichrome resistance heater wound on and covered by asbestos; asbestos coated with plaster of Paris. X-ray capillary extends into furnace through center well of three mm diameter.

NN) Leeds and Northrup glass fiber-insulated thermocouple wire running into off-center well in copper block.

OO) Leeds and Northrup thermocouple potentiometer.

PP) Source of gaseous carbon tetrachloride or chlorine.

Chloride analyses were made by potentiometric microtitration in a constant temperature (25° C) room, using the apparatus indicated in Fig. 3 together with a standard potentiometer arrangement.[27] The explanation of the symbols is:

A) Vibrator for stirring.

B) Stirring rod.

C) K-2 potentiometer arrangement, including an Aircell (Eveready Battery Company) balanced against a saturated Weston Standard cell.

D) Pure silver electrode.

E) Capillary-tipped extension for microburet.

F) Apieson W wax seal.

G) Twenty microliter capacity microburet (Microchemical Specialties Company, Berkeley, California).

H) Pyrex titration thimble of approximately 100 microliter volume.

Alpha activity was measured on a nitrogen-filled fifty-percent geometry counter operating a California type (Cyclotron Specialties Corporation, Moraga, California) scaling unit. The loss in counting rate for such an instrument due to its finite resolving time was insignificant (less than one percent) for rates below 50,000 disintegrations minute^{-1}.

Absorption spectra were measured on a Beckman Model DU(Beckman Laboratories, Pasadena, California) spectrophotometer equipped with a special constant temperature (25°C) cell holder.

A Spencer binocular microscope of 3 to 36 power was used to observe the progress of microchemical reactions. For transferring measured aliquots of solutions calibrated micropipets (Microchemical Specialties Company) were used.

Procedure

For Runs 1-3, an aliquot of a stock solution containing almost pure Np(V) was transferred to the evaporation cell(See Fig. 2-A), the finger sealed on with

Apiezon W wax, a vacuum slowly drawn, the solid material exposed to a high vacuum for a period of time, some of product scraped into x-ray capillary, and capillary sealed off. The material remaining in the evaporation cell was dissolved in 0.1 M H_2SO_4 solution and titrated for chloride content.

Stock solution I was made from a concentrated (16.9 grams of neptunium per liter) mixture of Np(IV) + Np(V) in 0.9 M HCl. Saturated chlorine water was used at room temperature to oxidize all the neptunium up to the plus 5 oxidation state. The oxidation was followed by periodic observation of the characteristic absorption spectra peaks, the Np(IV) at 7240 A and the Np(V) at 9860 A. Table I gives the chlorine absorption spectrum in water. The presence of chlorine obscured to some extent detection of very small amounts of Np(VI)(less than about 0.5 percent) because of the absorption peak[28] at approximately 3100 A.

Table I

Absorption Spectrum of a Saturated Solution of Chlorine in Water at 25° C

Wavelength (Angstroms)	Light Density (log I_0/I)	Wavelength (Angstroms)	Light Density (log I_0/I)
2000	0.005	3100	0.238
2500	0.008	3150	0.235
2650	0.016	3200	0.232
2750	0.018	3250	0.221
2850	0.017	3300	0.207
2900	0.026	3500	0.107
2950	0.083	3750	0.037
3000	0.185	3900	0.019
3050	0.224	4050	0.011
3070	0.235	4250	0.007
3080	0.242	4500	0.003
*3090	0.245		

*Absorption peak

Stock solution I originally consisted of 2.50 ml of 0.00160 M Np(60% Np(IV) + 40% Np(V)) + 0.001 M Cl_2 in 0.022 M HCl solution. After 18 hours twenty percent Np(IV) was left; after 40 hours, ten percent. At this point the solution was

warmed to 70° C for ten minutes to speed the oxidation process. The result was a solution containing roughly 10 percent Np(VI), 20 percent Np(IV), and 70 percent Np(V). The chlorine content of the solution was increased to 0.002 M Cl_2, and after 24 more hours at room temperature the solution was greater than 98 percent Np(V). A later check at 160 hours showed the Np(V) to be greater than 98 percent, with less than 2 percent Np(IV) and no detectable Np(VI)(less than 0.5 percent).

Calibrations and standardizations

Microburet no. 851 was calibrated with mercury, with water, and by acid - base titrations. The latter involved titrating various measured aliquots of (4.91 ± 0.02) M HCl solution with (0.2679 ± 0.0006) M NaOH solution, using phenolphthalein as an indicator. The sodium hydroxide solution was standardized on a 5 ml scale using potassium hydrogen phthalate as a primary standard. All methods of calibration agreed within 1%. The microburet delivered 21.72 microliters of solution for 35.00 cm of length.

The Beckman spectrophotometer no. 1199 was calibrated against several lines of a mercury arc spectrum. The final agreement is shown in Table II.

Table II

Spectrophotometer Calibration Using Mercury Arc Spectrum

True Wavelength (Angstroms)	Scale Wavelength (Angstroms)
2536	2535 ± 1
2967	2962 ± 1
3650	3642 ± 3
4047	4040 ± 2
4358	4343 ± 2
5461	5450 ± 3
6903	6900 ± 10
10140	10140 ± 10

For the chloride determination the apparatus shown in Fig. 3 was used. The potentiometer was read to the nearest 0.5 millivolt. A standard silver solution containing (0.009954 ± 0.000005) M $AgNO_3$ in 0.2 M HNO_3 solution was added to the buret and used for titrating 50 microliters of a standard chloride solution containing (0.002991 ± 0.0000005) M KCl solution. Fifty microliters of 0.2 M H_2SO_4 solution used as wash brought the total starting volume to 100 microliters. A typical standardization is shown in Table III. The change in EMF per unit change in volume (measured by position of buret meniscus) is indicated. During the titration which took about 50 minutes, the room was kept dark to avoid silver chloride decomposition. Low illumination was used to light only the buret scale. The end point occurred at an EMF of about 0.157 volts.

Table III

Typical Potentiometric Microtitration of Chloride with Standard Silver Solution

Buret Reading (cm)	EMF (volts)	EMF/cm
0.00	0.2715	0.001
5.30	0.2635	0.002
13.90	0.2480	0.004
21.30	0.2185	0.009
22.30	0.2100	0.008
23.40	0.2015	0.015
23.90	0.1840	0.017
24.40	0.1755	0.022
24.70	0.1690	0.032
24.90	0.1625	0.035
25.00	0.1590	0.040*
25.10	0.1550	0.035
25.20	0.1515	0.030
25.30	0.1485	0.025
25.40	0.1460	0.017
26.40	0.1290	0.012
28.40	0.1050	0.005
31.40	0.0390	

* End point at 0.157 volts

Theor. chloride present = (50) (0.002991) = 0.1496 } Micromole of Cl^-
Titration value = (15.08) (0.009954) = 0.1501 }
Difference = 0.4 percent micromole of Ag^+ used

Run 1

Five hundred microliters of stock solution I was transferred to the evaporation cell and slowly evaporated at room temperature for 15 hours in a vacuum of about 5×10^{-2} mm. The product was a group of green-yellow crystals. Some of the product was sealed off in an x-ray capillary at 5×10^{-2} mm pressure; however, because of the limited quantity of material, no x-ray diffraction pattern was obtained. The remainder was dissolved in 1.0 M HCl solution and its absorption spectrum examined. The spectrophotometer indicated rough* values of greater than 95 percent Np(V), less than 5 percent Np(IV), and no Np(VI).

Run 2

Approximately 380 microliters of stock solution I was used. Air was slowly pumped out of the cell over a period of 50 minutes. The solution evaporated to dryness during the following 12 minutes. The pressure was raised to one atmosphere, and the product was dissolved in 2.0 ml of 1 M H_2SO_4. The absorption spectrum on 1.5 ml of the solution indicated greater than 98 percent Np(V), with less than 1 percent of both Np(IV) and Np(VI). Titrations of the chloride in 100 and 250 microliter aliquots of the solution were used in conjunction with alpha assays to give values of 1.38 and 1.36 for the Cl/Np ratio. The average value is 1.37 ± 0.05. As was done in most runs, the alpha assays were checked by transferring to thin (0.005 inch) platinum disks measured aliquots of original solution as well as the entire titrated solution, were dried, and the activity determined.

Run 3

One ml of stock solution I was added to the cell. The liquid was evaporated and the residue treated with a vacuum of about 5×10^{-5} mm for 2 hours. Part of the product was scraped into the x-ray capillary; the rest was dissolved in

---

* Accuracy is low in very dilute solutions.

dilute sulfuric acid. No x-ray diffraction pattern could be obtained. For the solution, the absorption spectrum showed greater than 97 percent Np(V), less than 2 percent Np(IV), and less than 1 percent Np(VI). The Cl/Np ratio was 1.39 ± 0.05.

Chlorine oxidation of Np(IV) to Np(V)

Five hundred microliters of 0.9 M HCl solution containing about 3.5 mg of neptunium was diluted with water to 2.5 ml. The absorption spectrum indicated 60 percent Np(IV), 40 percent Np(V), and less than 0.3 percent Np(VI). Two hundred microliters of saturated chlorine water was added. The resulting solution was: 0.17 M HCl, 0.0067 M Cl_2, and 0.0150 M Np. After one-half hour at room temperature the solution was 44 percent Np(IV); after 22 hours, 35 percent. No further change occurred after 42 hours, so 200 microliters more of saturated chlorine water was added. Table IV shows rate of disappearance of the Np(IV) as indicated by an absorption spectrum peak.

Table IV

Chlorine Oxidation of Np(IV) to Np(V)

Volume	2.90 ml
Np(IV)	0.0049 M
Np(V)	0.0091 M
HCl	0.13 M
Cl_2	0.014 M

Time (minutes)	Np(IV) Concentration (spectrophotometric density)
0	0.119
1.7	0.114
2.7	0.106
4.3	0.105
7.0	0.097
9	0.090
12	0.080
16	0.069
21	0.057
143	0.000*
173	0.000
203	-0.001

* Oxidation essentially complete(99 percent) in about two hours.

The solution described in Table IV was labeled stock solution II and used for runs 4-14. The composition remained at greater than 98 percent Np(V), less than 2 percent Np(IV), and less than 0.4 percent Np(VI), as shown by periodic checks over an interval of several months.

New Np(V) absorption peak at 10980 A

During the oxidation experiments a new Np(V) absorption peak was discovered at 10980 A in the near infrared region. Its molar extinction coefficient is apparently close to that of the 6190 A Np(V) peak, since the densities of these two peaks were about the same in various solutions. Table V indicates the relationship between wavelength and spectrophotometric density for the new peak in stock solution II. The slit width had to be varied between 0.03 mm and 0.52 mm during the determination, each setting being the minimum possible. Around the peak the width was kept constant at 0.070 mm. The peak is not as sharp as the 9860 A Np(V) absorption line, but the occurrence in a region where Np(VI) and Np(IV) give no interference should make this absorption useful in cases of mixtures. Determination of exact molar extinction coefficients in different acids of varying concentration must be carried out before the new peak can be used quantitatively.

Table V

New Np(V) Absorption Spectrum Peak at 10980 A

Wavelength (Angstroms)	Spectrophotometric Density*	Wavelength (Angstroms)	Spectrophotometric Density*
10500	0.010	10990	0.283
550	.010	11000	.280
600	.009	020	.267
650	.010	050	.225
700	.011	100	.145
750	.016	150	.093
800	.025	200	.069
850	.075	250	.053
900	.162	300	.043
920	.230	350	.037
940	.248	400	.032
950	.280	500	.026
960	.287	600	.023
970	.288	700	.023
**980	.294	12000	.021

*One cm cell used with 0.0140 M Np(V) solution.

**Peak

Run 4

Apparatus 2-B (See page 9 and Fig. 2B) was used for this and the following two runs. Three microliters of stock solution II was pipetted into 50 microliters of 0.2 M HCl solution in a reaction thimble and the pipet rinsed several times. The thimble was inserted into the reaction system and solution was slowly evaporated over a period of 20 minutes by the gradual application of vacuum. After dry air was let in the system, 100 microliters of 0.2 M H_2SO_4 solution was added to the residue, and the thimble removed to the titration apparatus. The Cl/Np ratio was found to be 1.39 ± 0.03.

Run 5

Three microliters of stock solution II was transferred to a new thimble and evaporated in 10 minutes. The system, under 0.1 mm pressure, was heated to 200° C in 30 minutes and cooled to 150° C in 15 minutes. The pressure was reduced to about 1 x 10^{-4} mm and cooled from 150° C to 100° C in 15 minutes. Titration and

alpha assay on the entire sample showed Cl/Np was 2.36 ± 0.05. No neptunium was lost in the heating cycle.

Run 6

Three microliters of stock solution II was evaporated as in Run 5 and dried for 30 minutes at about 0.01 mm pressure. Carbon tetrachloride vapor, at a pressure of about 100 mm* was allowed to fill the system. The temperature of the reaction thimble was raised to 300° C in 20 minutes, kept at 300° C for 10 minutes more while the system was flushed several times with fresh carbon tetrachloride, and cooled down to 100° C in 30 minutes. A determination of the Cl/Np ratio showed 2.77 ± 0.05. An 80 percent loss of activity from the thimble was noted, only 20 percent of the neptunium being found in the thimble after the preparation cycle.

Run 7

Forty-five microliters of stock solution II, containing about 150 micrograms of neptunium, was used. Apparatus 2-C (See page 9 and Fig. 2C) was employed for this and all subsequent runs. The solution was slowly evaporated over a period of several hours by gradually applying a vacuum. For transferring scrapings to the x-ray capillary a new technique was used to prevent the attack of the highly deliquescent product by moisture in the air: The vacuum in the apparatus was replaced with dried air at one atmosphere, the cell removed, pure dry benzene poured in to cover the yellow-green crystals, and scraping carried out under the benzene surface by means of a long flexible platinum wire. The cell was again attached to the vacuum system, the benzene pumped off, and the product dried in a vacuum of 1×10^{-5} mm for 23 hours. The x-ray specimen was sealed off and examined by x-ray diffraction. No lines were visible in the picture. The Cl/Np ratio

---

* normal vapor pressure of the liquid at room temperature.

as determined on part of the material as 1.45 and 1.48, with an average of 1.46 $\pm$ 0.07. The absorption spectrum showed greater than 93 percent of the neptunium to be Np(V).

Run 3

The evaporation of 50 microliters of stock solution II was carried out over an interval of one hour. The yellow-green crystals were further dried for 2 hours at 1×10^{-4} and 30 minutes at 1×10^{-5} mm. After transferral under benzene the product looked slightly deliquescent, so a drying for 20 minutes at 1×10^{-5} mm was introduced. The pressure was kept at 1×10^{-5} mm as the temperature was increased from 25° C to 115° C over an interval of 10 minutes, kept at 115° C for 15 minutes, and decreased to 25° C in 20 minutes. Microscopic examination at this point showed a gold-yellow product in the capillary. Carbon tetrachloride vapor was introduced and the material slowly heated to 360° C in 75 minutes. After the thimble was cooled to 330° C, a vacuum of about 1×10^{-3} mm was pumped on the system for 10 minutes; during this time a yellow sublimate appeared at the edge of the furnace. Gaseous carbon tetrachloride was again added and the furnace temperature raised from 330-390° C in 10 minutes. The color of the sublimate appeared to have changed into a tan. Application of a vacuum of about 5×10^{-4} mm at 385° C for 5 minutes caused deposition of red crystals. This new sublimate tailed off into the previous deposit which was now brown. The system was cooled and the capillary sealed off in two sections, one containing the amber-brown pieces of residue, and the other the red sublimate. X-ray powder pictures of each showed new patterns (See Tables VI and VII), the two being different from each other and from any previously known neptunium compound.

Table VI

X-ray Diffraction Pattern* of Run 8 Residues

θ (degrees)	Visual Intensity**	θ (degrees)	Visual Intensity**
10.82	W	31.24	M
14.46	M	33.42	M
16.83	W	34.37	M
17.63	W	36.65	W
18.23	S	37.98	M
19.21	W	39.47	VW
19.81	S	40.52	VW
23.58	W	41.78	W
24.21	W	52.17	W
24.34	M	57.17	W
27.22	W	58.12	VW
28.10	W	60.46	W
29.62	M	64.23	W

* Film no. 545
** VS very strong, S strong, M medium, W weak, VW very weak

Table VII

X-ray Diffraction Pattern* of Run 8 Sublimate

θ (degrees)	Visual Intensity	θ (degrees)	Visual Intensity
7.27	M	15.01	VW
7.81	M	15.61	VW
16.56	S	27.35	W
21.35	M	28.29	W
21.66	M	31.72	M
25.31	W	32.19	M
26.10	M	35.01	W
27.28	W		

* Film no. 548
The above pattern closely resembles that of $CbCl_5$

Run 9

Fifty microliters of stock solution II was evaporated in 10 minutes, dried at 6×10^{-4} mm for 40 minutes, and sealed off in benzene. The product was a mixture of light green and dark green crystals. Two different pieces of product

were sealed in separate capillaries. Powder diffraction patterns revealed each to be a new pattern (See Tables VIII and IX).

Table VIII

X-ray Diffraction Pattern* of Run 9 Residue (A)

θ (degrees)	Visual Intensity	θ (degrees)	Visual Intensity
8.52	S	24.73	W
10.07	S	25.26	W
10.89	M	25.64	M
12.22	VS	26.61	W
13.08	M	28.40	M
13.87	S	30.96	W
17.48	S	31.78	M
18.65	S	33.56	M
20.48	M	36.50	M
22.64	S	37.13	M
23.65	S	38.12	W

* Film no. 566

Table IX

X-ray Diffraction Pattern* of Run 9 Residue (B)

θ (degrees)	Visual Intensity	θ (degrees)	Visual Intensity
10.80	VS	34.80	W
14.01	M	36.05	W
15.48	M	36.68	W
16.68	W	38.14	W
17.89	S	38.64	W
19.86	W	39.47	W
21.10	W	40.39	M
22.15	M	44.21	M
23.23	M	45.16	VW
24.15	M	47.67	VW
25.11	W	50.69	VW
26.00	W	54.85	VW
26.79	W	57.17	VW
27.36	W	59.24	VW
28.38	M	60.03	VW
29.97	W	61.91	VW
30.76	W	63.11	VW
32.41	M	68.71	VW
33.18	VW	73.54	VW
34.07	W		

* Film nos. 586 and 587
D. H. Templeton has indicated that many of the lines of this pattern can be explained by a tetragonal arrangement with a = 5.73 and c = 7.52 A.

Run 10

The chloride solid prepared by the usual evaporation technique was treated alternately with carbon tetrachloride vapor and high vacuum at 25-500° C over a period of 17 hours. No sublimate appeared until a temperature of 450° C was reached in the presence of carbon tetrachloride. Part of the final product was dark yellow, part consisted of light yellow bands. X-ray diffraction analysis showed the dark yellow to be $NpCl_4$, the light yellow to be NpO_2. The flaky golden residue gave the pattern of NpO_2.

Run 11

The usual preliminary treatment gave a dry product which was further dehydrated in a vacuum of about 5 x 10^{-4} mm at 130° C for 20 minutes. Alternate treatment with carbon tetrachloride and with vacuum (10^{-4} mm) over the interval between 130 and 400° C during a period of 7 hours produced no sublimate of any kind. The clear, glassy-appearing golden-yellow residue gave the NpO_2 pattern.

Run 12

In this and the following two runs chlorine containing a trace of carbon tetrachloride was used. The usual solid starting material was allowed to stand for 45 hours in chlorine, the gas being at a pressure of 400 mm. Drying consisted of heating the salt for 15 minutes at 110° C in the chlorine. The temperature was raised to 600° C over an interval of 6 hours. At 450° C a small amount of yellow sublimate formed, while at 550° C an iridescent gray crystalline deposit was noticed at the edge of the furnace. At the end of the run there was a very faint white cloudy deposit beyond the gray material, none of the yellow sublimate being left. X-ray examination showed that the yellow residue was NpO_2, but gave no lines for the gray sublimate.

Run 13

As usual, 50 microliters of stock solution II was evaporated to dryness in 5 minutes and dried at 10^{-4} mm for 60 minutes. After the benzene transferal, the material in the capillary consisted of light olive-green clumps of apparently very fine crystals. The salt was exposed to a vacuum of 10^{-4} mm while it was heated to 145° C in five minutes, dried at 145°C for five minutes, cooled to 120° C, and exposed to a mixture of carbon tetrachloride vapor (125 mm) and chlorine (15 mm). The material was allowed to cool slowly to room temperature and remain in contact with the gas for 16 hours. The solid was heated to 200° C in 45 minutes, the chlorinating mixture replaced by another containing chlorine at 600 mm pressure and a trace

of carbon tetrachloride, and the temperature raised to 225° C in fifteen minutes. At this point a red crystalline sublimate began forming. The temperature was slowly increased to 240° C over an interval of 40 minutes, but no further amounts of sublimate were formed. The residue was examined microscopically and found to possess the same green color, but in addition the capillary contained a small amount of scattered red crystals. Further treatment with chlorine at 245° C produced more red crystals. A third treatment at 150-440° C over two hours gave no further sublimate. Most of the original starting material was still present in the residue at this point, the color of the latter was still yellow-green. The system was allowed to stand for two days. At the end of this time, the orange crystals had turned yellow-green and a small amount of some liquid had formed. The liquid is believed to have been carbon tetrachloride, or possibly moisture, since the pressure had risen to atmospheric. The system was pumped for 90 minutes, the temperature raised to 150° C in 30 minutes and kept at that temperature for 20 more minutes. During this procedure the original orange-red color of the crystals returned. The system was exposed to chlorine and the temperature of the furnace was slowly raised to 400° C. No further sublimate formed. The orange-red sublimate gave no x-ray diffraction pattern. The gold-tan sublimate gave what is apparently a new and unknown pattern.

Run 14

After the usual evaporation, the material was dried at 110° C for 30 minutes in a vacuum of 1×10^{-4} mm. The x-ray diffraction pattern on this specimen contained six very faint lines of another unknown pattern.

III. ACKNOWLEDGMENTS

I wish to express my appreciation to Professor Glenn T. Seaborg for his continued interest in this work and his many helpful suggestions and advice. The author also wishes to express his gratitude to Dr. D. H. Templeton and Mrs. L. Jackson for the x-ray data. This work was performed under the auspices of the Atomic Energy Commission at the Radiation Laboratory, University of California, Berkeley, California.

IV. References

1. McMillan and Abelson, Phys. Rev. 57, 1185 (1940).
2. See references, Manhattan Project Report CC-3665, 1 (1946).
3. Seaborg, Manhattan Project Paper MUC-GTS-858, (July 1944).
4. Seaborg, Chem. Eng. News 23, 2190 (1945).
5. Wahl and Seaborg, Phys. Rev. 73, 940 (1948); Plutonium Project Record, Vol. 14B, No. 1.5 (1948).
6. McMillan, Phys. Rev. 58, 178 (1940); Nishina, Yasaki, Ezoe, Kimura, and Ikawa, Phys. Rev. 57, 1182 (1940).
7. Seaborg, Rev. Mod. Phys. 16, 1 (1944).
8. Magnusson and LaChapelle, Manhattan Project Report CN-1764, (July 1944); Plutonium Project Record, Vol. 14B, No. 1.7 (1948); University of California Radiation Laboratory Report 105 (May 1948).
9. Zachariasen, Manhattan Project Report MUC-FWHZ-31 (June 1944); Plutonium Project Record, Vol. 14B, Nos. 20.7, 20.8 (1948).
10. Magnusson and LaChapelle, Manhattan Project Report CN-2038 (Sept. 1944).
11. Zachariasen, Manhattan Project Report MUC-FWHZ-54 (Aug. 1944).
12. LaChapelle, Plutonium Project Record, Vol. 14B, No. 15.7 (1948).
13. Magnusson, Hindman, and LaChapelle, Plutonium Project Record, Vol. 14B, No. 15.8 (1948).
14. Magnusson, Hindman, and LaChapelle, Manhattan Project Report CN-2767 (March 1945); Plutonium Project Record, Vol. 14B, No. 15.1 (1948).
15. Hindman, Magnusson, and LaChapelle, Plutonium Project Record, Vol. 14B, No. 15.2 (1948).
16. Magnusson, LaChapelle, and Hindman, Manhattan Project Report CN-3053 (June 1945); Plutonium Project Record, Vol. 14B, No. 15.3 (1948).
17. Magnusson, Hindman, and LaChapelle, Plutonium Project Record, Vol. 14B, No. 15.4 (1948).
18. LaChapelle, Magnusson, and Hindman, Plutonium Project Record, Vol. 14B, No. 15.6 (1948).
19. Seaborg, Chem. Eng. News 23, 2190 (1945); Rec. Chem. Prog. 1946, 11; Chem. Eng. News 24, 1197 (1946); Science 104, 384 (1946).
20. Hindman, Magnusson, Manhattan Project Report CC-3665 (Oct. 1946).
21. For example, Starke, Naturwissenschaften 30, 107 (1942).
22. Fried and Davidson, Plutonium Project Record, Vol. 14B, No. 15.5 (1948).
23. Evers, Manhattan Project Declassified Report MDDC-690 (1947).
24. Brewer, Bromley, Gilles and Lofgren, Manhattan Project Declassified Report MDDC-1417 (1947); corrected (1948).
25. For example, Pauling, Nature of the Chemical Bond (1939).
26. Skinner and Sutton, Trans. Far. Soc. 36, 663 (1940).
27. See Kolthoff and Furman, Potentiometric Titrations, 88 (1931).
28. See also Von Halban and Siedentopf, Z. physik. Chem. 103, 84 (1922).

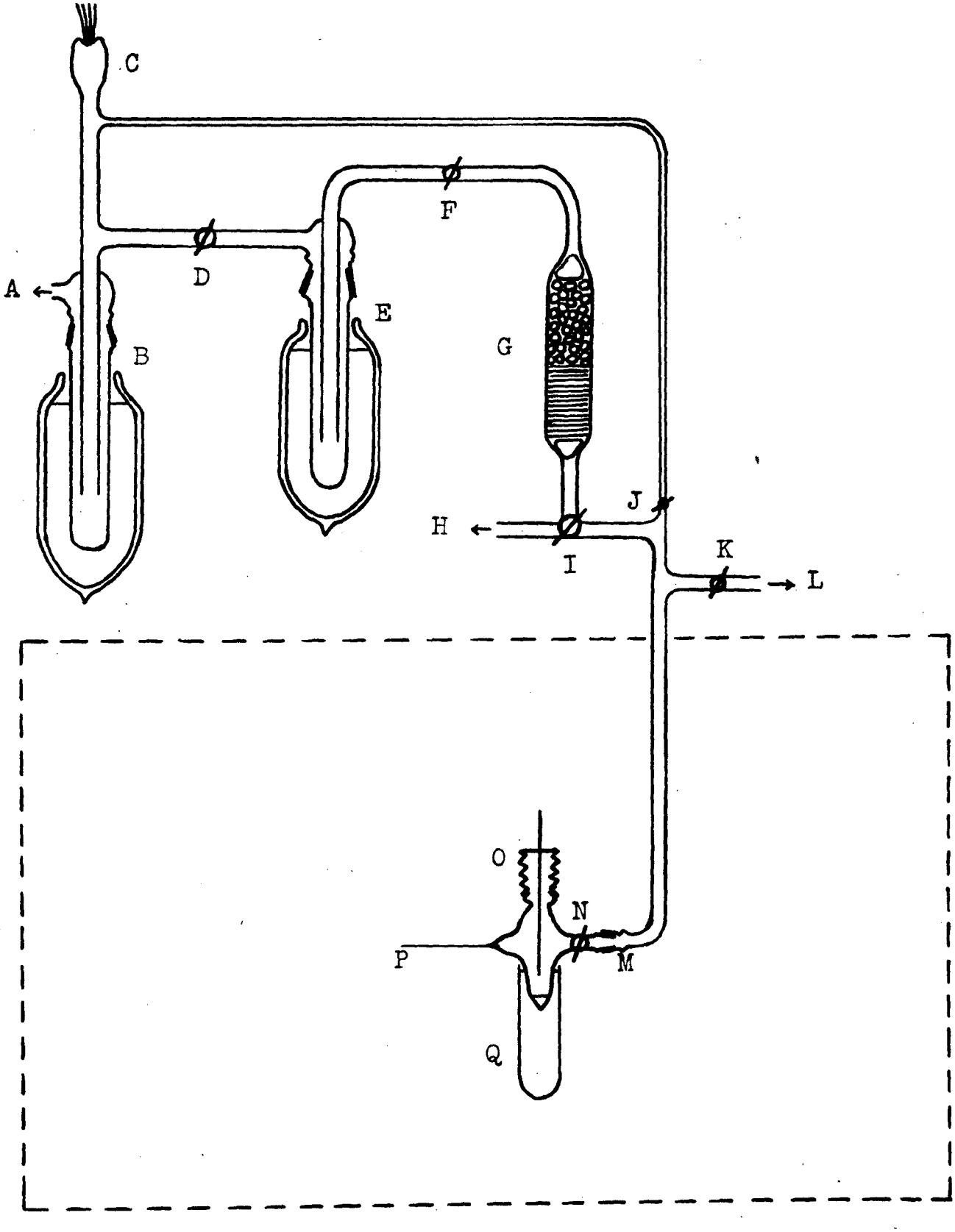

Fig. 2-A First high vacuum preparative arrangement

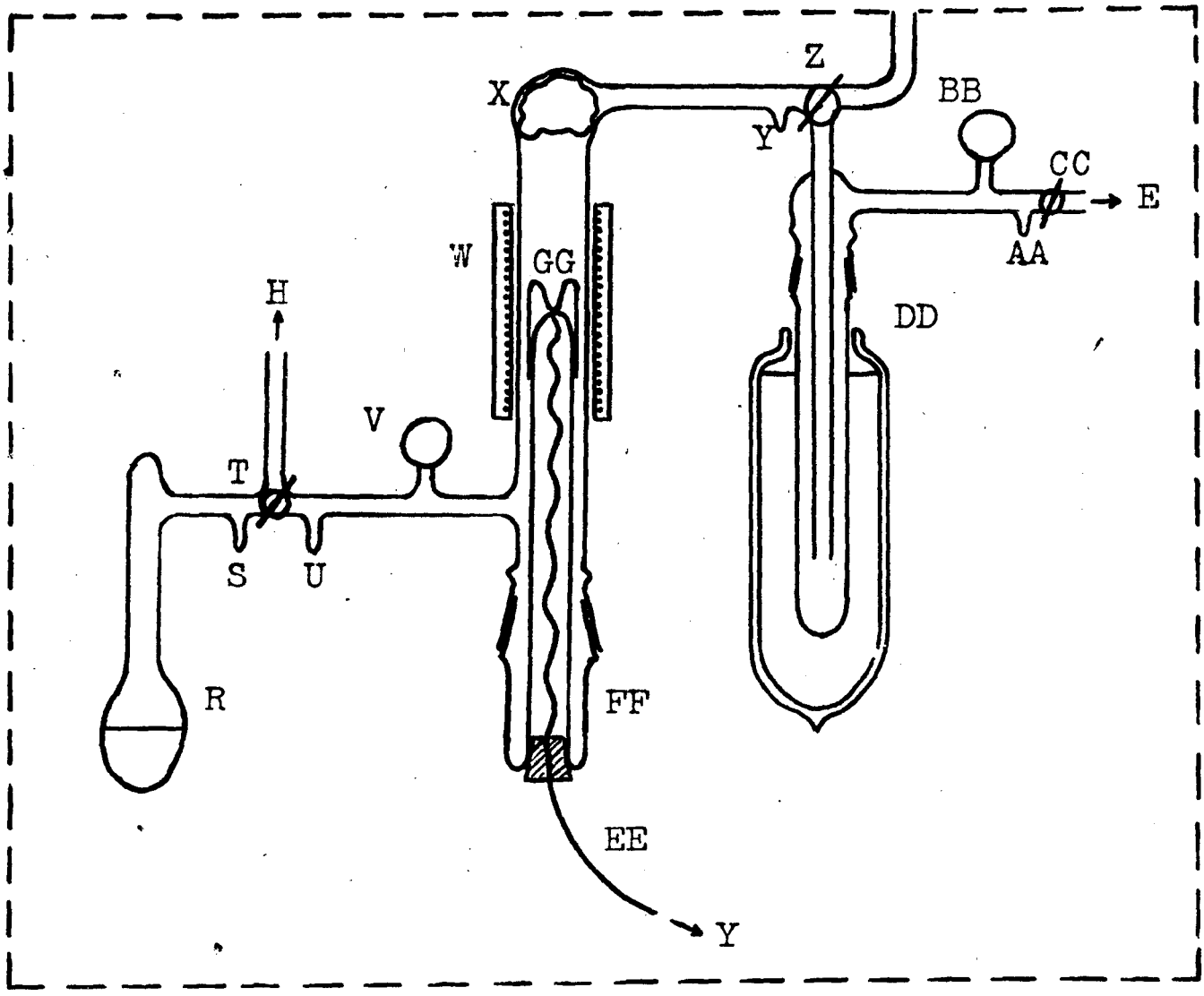

Fig. 2-B Second vacuum line arrangement.

These details supplant those occurring within the dashed line area of Fig. 2-A.

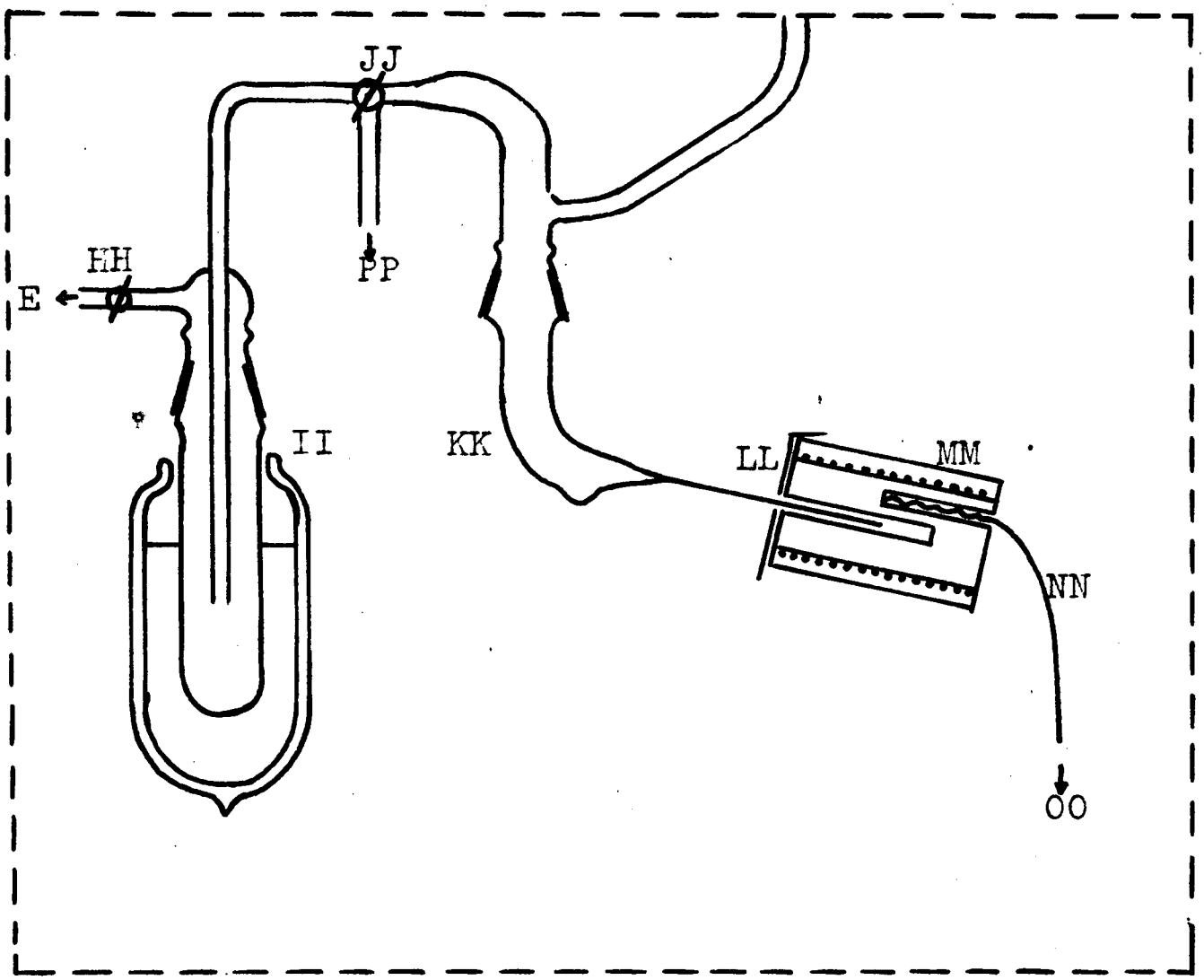

Fig. 2-C Third vacuum line arrangement.

These details supplant those occurring within the dashed line area of Fig. 2-A.

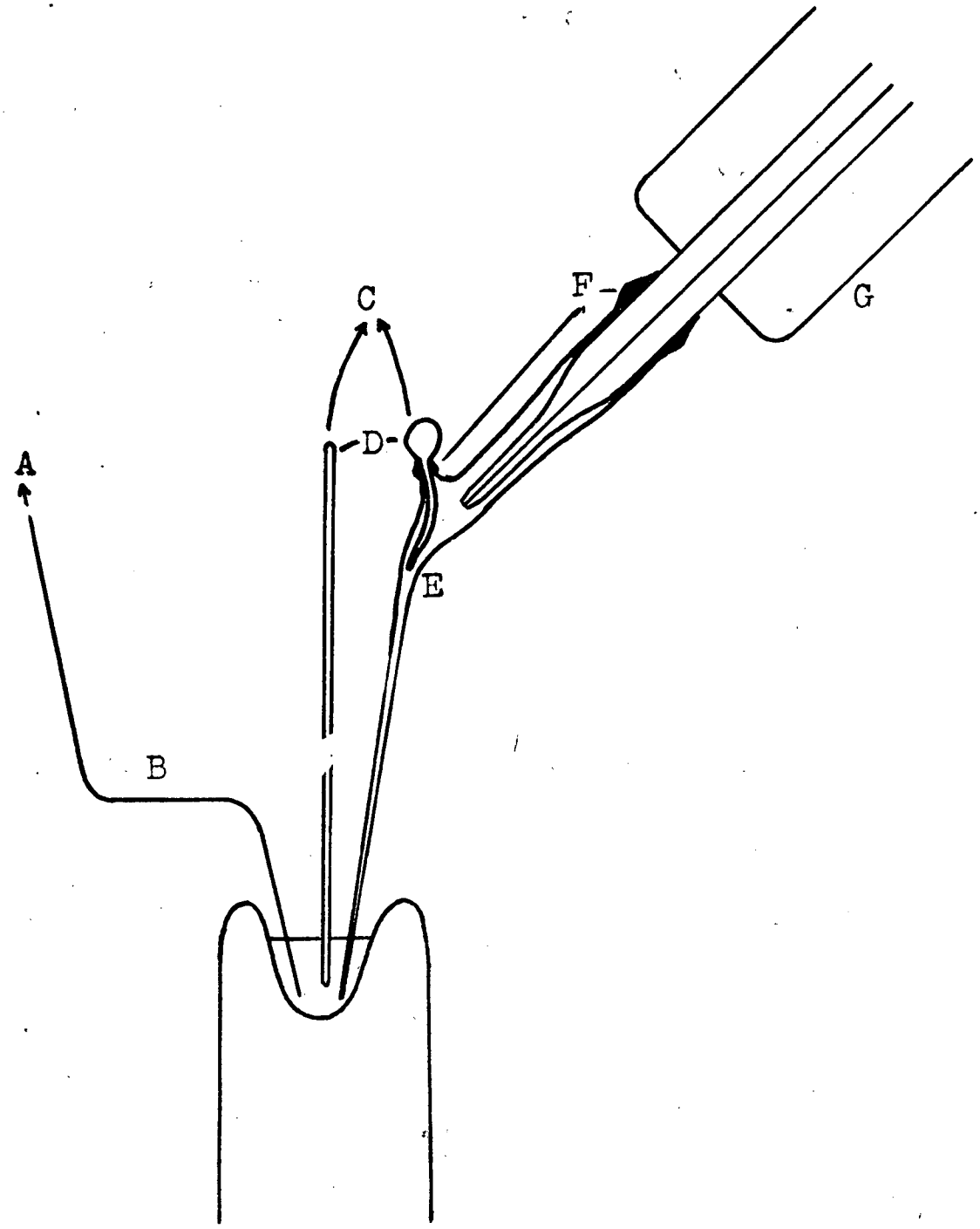

Fig.3 Potentiometric micro-titration apparatus.