UCRL 3490

UNIVERSITY OF CALIFORNIA

Radiation Laboratory

A LEAD GLASS CERENKOV RADIATION PHOTON SPECTROMETER

TWO-WEEK LOAN COPY

This is a Library Circulating Copy which may be borrowed for two weeks. For a personal retention copy, call Tech. Info. Division, Ext. 5545

DISCLAIMER

This document was prepared as an account of work sponsored by the United States Government. While this document is believed to contain correct information, neither the United States Government nor any agency thereof, nor the Regents of the University of California, nor any of their employees, makes any warranty, express or implied, or assumes any legal responsibility for the accuracy, completeness, or usefulness of any information, apparatus, product, or process disclosed, or represents that its use would not infringe privately owned rights. Reference herein to any specific commercial product, process, or service by its trade name, trademark, manufacturer, or otherwise, does not necessarily constitute or imply its endorsement, recommendation, or favoring by the United States Government or any agency thereof, or the Regents of the University of California. The views and opinions of authors expressed herein do not necessarily state or reflect those of the United States Government or any agency thereof or the Regents of the University of California.

UCRL-3490
Instrumentation Distribution

UNIVERSITY OF CALIFORNIA
Radiation Laboratory
Berkeley, California

Contract No. W-7405-eng-48

A LEAD GLASS CERENKOV RADIATION PHOTON SPECTROMETER

John M. Brabant, Burton J. Moyer and Roger Wallace

August 7, 1956

Printed for the U.S. Atomic Energy Commission

A LEAD GLASS CERENKOV RADIATION PHOTON SPECTROMETER

John M. Brabant, Burton J. Moyer and Roger Wallace

Radiation Laboratory
University of California
Berkeley, California

August 7, 1956

ABSTRACT

A photon spectrometer has been constructed and used which consists of a cylinder of glass, 12 in. in diameter and 14 in. long, containing 52% of PbO, viewed by four 5-in.-diameter photomultipliers. The total Cerenkov radiation emitted by electron showers in the glass initiated by photons incident along the axis is nearly proportional to the incident photon energy, from 50 Mev to at least 1.4 Bev. The spectrometer has been calibrated over this range of photon energies by the pulses produced by electrons of the same energies. Above 200 Mev the measured energy resolution of the spectrometer is 30% and is approximately independent of energy. For elimination of incident charged particles during the analysis of γ rays the spectrometer is operated in coincidence with a preceding photon-identifying counter system.

A LEAD GLASS CERENKOV RADIATION PHOTON SPECTROMETER

John M. Brabant, Burton J. Moyer and Roger Wallace

Radiation Laboratory
University of California
Berkeley, California

August 7, 1956

I. INTRODUCTION

For beginning some experiments on the photons produced by the UCRL Bevatron, we decided that a moderately low-resolution, but high-efficiency, γ-ray spectrometer would be very useful to survey the γ rays from targets in the machine. It was thought that the light from the Cerenkov radiation produced in a piece of high-lead-content glass of sufficient size to absorb a large fraction of the energy of a photon-induced electron-photon shower would be nearly proportional to the energy of the incident γ ray. A similar instrument using lead plates and a liquid scintillator has been described by Pugh, Frisch, and Gomex.[1] We felt that such an instrument would allow us to make a rough evaluation of γ spectra extending to very high energies, and would indicate whether it would be desirable to later undertake the construction of an electron-pair spectrometer of higher resolution but much lower efficiency and far greater expense. Accordingly, the device described herein was constructed and has been used successfully, in several arrangements for a variety of experiments, for more than a year.

The Cerenkov counter when operated without the counter telescope in front has an efficiency for γ-ray detection of almost 100%;[2, 3] when it is used as a spectrometer the efficiency is limited only by that of the photon telescope. This spectrometer has been used for preliminary measurements of the spectra of γ rays emerging in various directions, with respect to the bombarding beam, from internal Bevatron targets bombarded with protons at several Bev. Measurements of the electron pair-production cross section at several Bev are currently in progress.[4] The spectrometer has also been used to measure the spectra of pulse heights arising from the annihilation of antiprotons produced by the UCRL Bevatron.[5, 6] This latter application has curtailed its use in the extensive high-energy γ-ray investigation that we have planned.

II. THE SPECTROMETER AND ASSOCIATED EQUIPMENT

A. The Spectrometer

The spectrometer shown in Fig. 1 and diagrammed in Fig. 2 consists of a 400-lb soft iron magnetic shield which also serves as a case for the glass and photomultipliers used to detect the Cerenkov radiation in the glass. The spectrometer was designed to operate in a field of 100 gauss, the level that prevails in some of the experimental areas of the Bevatron building.

The glass used in the spectrometer, in which the showers develop and the Cerenkov light is produced, is in the form of a cylinder 12.25 in. in diameter and 14 in. long. The cylinder is made of two pieces each 7 in. thick. The flat faces of these cylinders have been ground and polished to optical quality. The two pieces of glass and the photomultipliers are optically coupled by a thin layer of Dow-Corning 200 silicone compound having a viscosity of 2,500,000 centistokes and an index of refraction of 1.4. The DC 200 gives an excellent optical bond when held under pressure.

Before assembly the glass is wrapped in aluminum foil except for the end facing the photomultipliers, and is also wrapped circumferentially in sheet rubber and μ metal. The photomultiplier assembly is in contact with one flat face of the glass cylinder and an assembly consisting of a setscrew retaining ring, and rubber washer is placed against the other face. Snap rings, which fit into internal grooves cut into the main iron shield, hold the entire assembly rigidly in place by the compression of the setscrews, which apply sufficient axial load to the glass so that the spectrometer may be placed in any operating position with negligible movement of the 180 lb of glass.

The circuit boxes containing the bases of the phototubes are held to the assembly by springs that press the faces of the tubes against the glass. Each end of the magnetic shield case has a gasket groove for a rubber gasket. This permits a lighttight seal between the case and the end covers, which are held in place by bolts. Each circuit box contains a high-voltage input, two signal outputs, and a filament and plate voltage supply input. These are attached by cables to cable lead-throughs in one end cover. Cables lead from the outer side of the end cover to the amplifiers and recording equipment.

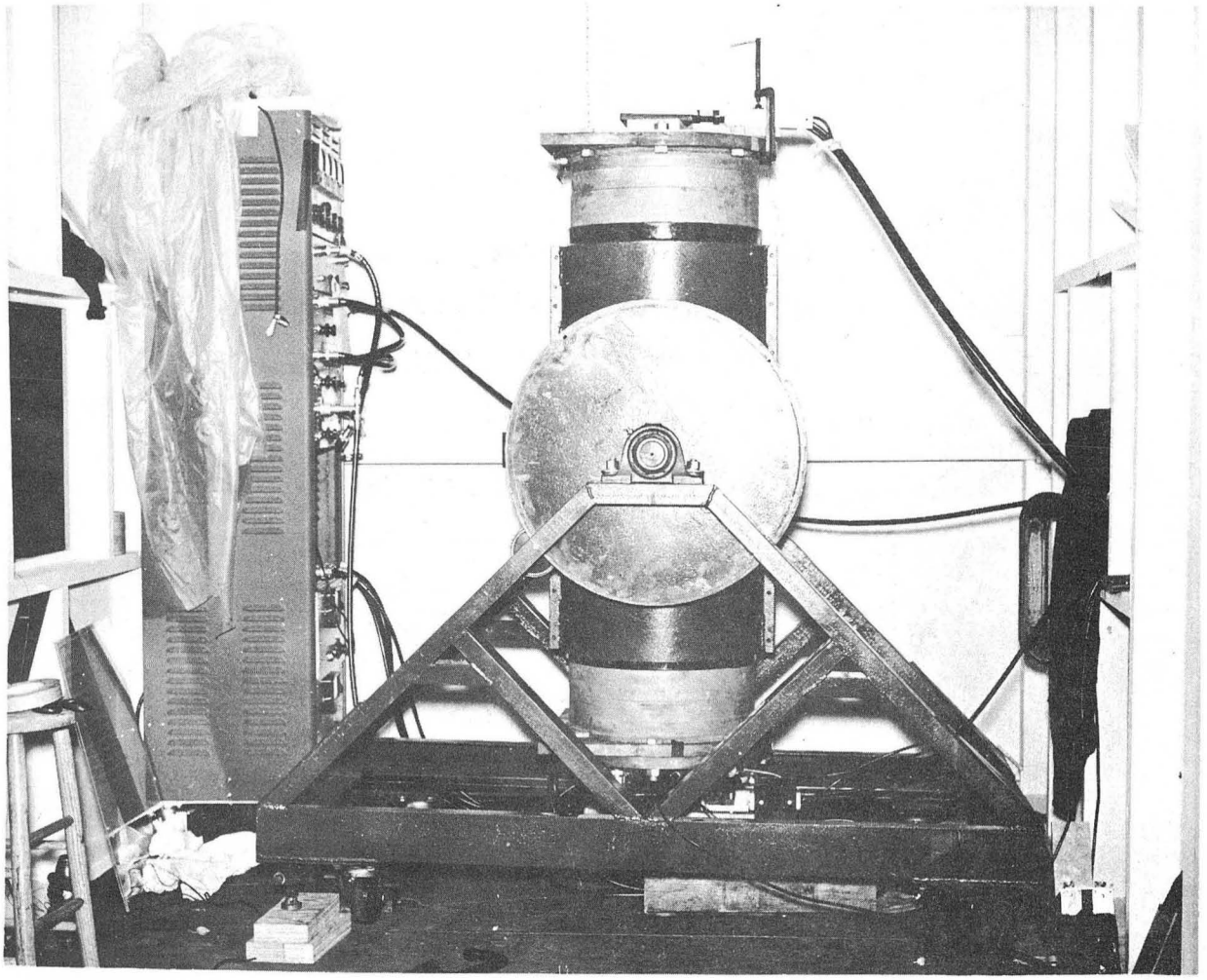

ZN-1551

Fig. 1. View of the Cerenkov spectrometer tilted up for cosmic ray muon calibration. Note that there are coincidence counters placed above and below the spectrometer which limit its acceptance to relativistic muons.

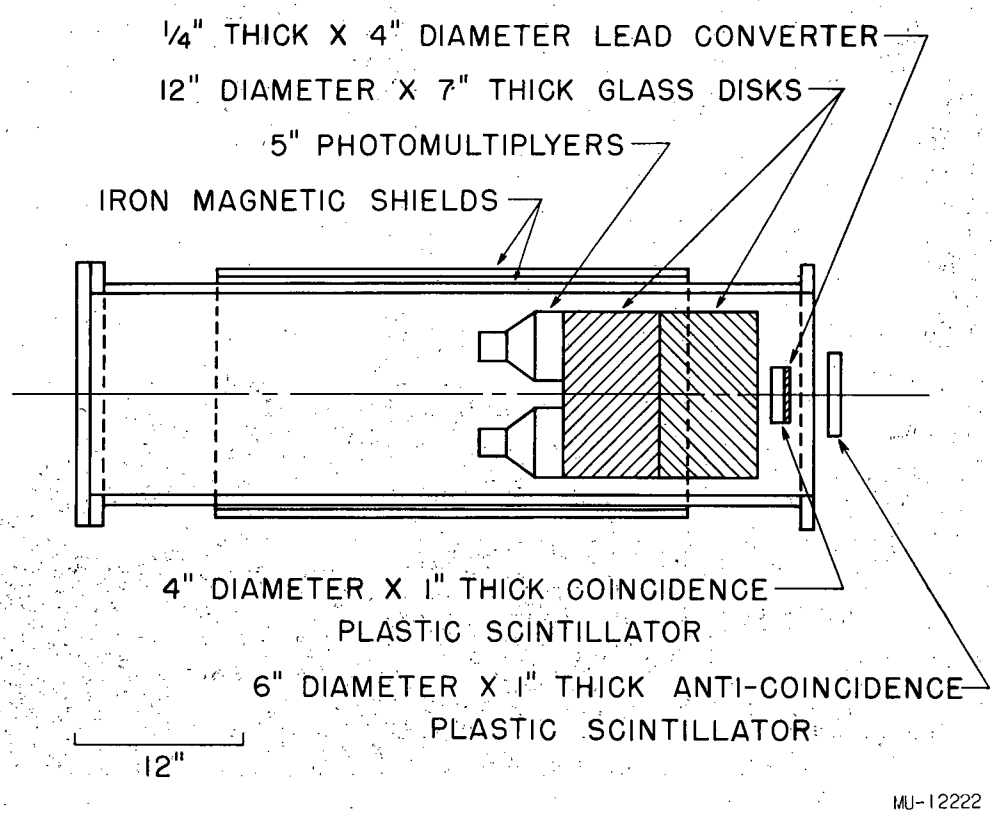

Fig. 2. Schematic arrangement of the spectrometer showing the glass, phototubes, and magnetic field, as well as the anticoincidence counter, lead, and coincidence counters. These two scintillation counters insure that the electron showers, which are pulse height analyzed, start in the 0.25-inch lead converter and thus are centered in the glass as well as all start at its front surface.

Figure 2 also shows the position of the 6-inch-diameter anticoincidence plastic scintillation counter, the 4-inch-diameter lead converter, and the 4-inch-diameter plastic scintillation coincidence counter. The lead converter is 0.25 inch thick and each scintillator is 1 inch thick. Each scintillation counter is viewed by four RCA 1P21 photomultipliers, and four DuMont 6364 tubes are used to take the Cerenkov light pulse from the glass. The entire assembly weighs about 800 lb.

B. Associated Equipment

The output pulse of each 6364 photomultiplier anode is fed into a cathode follower at the base of the tube. This lengthens the pulse in time and matches the output cable impedance. The outputs from all four cathode followers are then added and fed into a UCRL linear amplifier. The outputs from the last dynode of each 6364 photomultiplier are added together. The 1P21 photomultipliers on the scintillators have their outputs added in pairs so that each counter has two independent outputs. The two from the anticounter go to a fast double-coincidence circuit, while the two from the coincidence counter and the added dynode pulses from the Cerenkov counter go to a fast threefold coincidence. All signals are properly amplified by 200-Mc wide-band distributed amplifiers. The fast output of each coincidence circuit goes then to an anticoincidence circuit, which will deliver an output only when the anticoincidence counter has not fired and the coincidence arrangement has. The combined resolving time of the entire system is 6×10^{-8} second.

The properly delayed output of the anticoincidence circuit furnishes a signal for a triple-coincidence unit which gates a UCRL ten-channel pulse-height analyzer. The second signal to the triple coincidence comes from the Bevatron gating circuit, which allows the analyzer to count only while the beam is actually bombarding a target. This reduces the effect of machine and cosmic-ray background. The linear amplifier output goes into the triple-coincidence analyzer, and is the signal to be pulse-height analyzed. The differential pulse-height analyzer has a double-pulse resolving time of approximately 7 microseconds.

C. Magnetic Shielding

The 6364 photomultipliers are extremely sensitive to magnetic field. The counting rate varies over a wide range with the orientation of the tube in the earth's fraction-of-a-gauss field. Operation in the pulsing stray field of the Bevatron, where the field may reach 100 gauss, presented a serious problem. A second cylinder of soft iron 0.5 in. thick but separated from the main outer shield by 0.25 in. of dielectric, a 20-mil-thick cylinder of μ metal inside the main shield and cylinderical μ-metal shields around each phototube individually were found to be necessary to reduce the effect of the external magnetic fields to a negligible value. To test the magnetic shielding the spectrometer was gated to count for 0.1-second intervals during various phases of the 2-second Bevatron magnetic pulse. It was found that at the locations where the spectrometer was to be used the foregoing precautions were sufficient to give the same cosmic-ray counting rate and pulse-height distribution for all phases of the stray Bevatron magnetic field.

D. The Glass

The glass itself was a special casting by the Corning Glass Company of a dense flint glass, code No. 8392. The density of this glass is 3.89 grams per cc, and it consists of 52% PbO, 42% SiO_2, 3% K_2O, and 3% Na_2O by weight. The index of refraction for the sodium "D" line is 1.649, and the light transmission (including two surface reflections) from 6700A to 4300A is 80% for one 7-in.-thickness, with a sharp cutoff at 4000A. The dispersion of the glass is 33.8. The index of 1.649 gives a threshold for Cerenkov radiation of 0.13 Mev for electrons, 28 Mev for muons, 36 Mev for pions, and 240 Mev for protons. One radiation length is 2.77 cm, so that there are 12.85 radiation lengths in the 14-in. length of glass. The critical energy in the glass is 17.5 Mev. Although ionization energy loss plays no part in the production of light in the spectrometer, charged particles traveling at minimum ionization (velocity = 0.955 c) through the glass encounter 138 g/cm^2 and lose 1.47 Mev per g/cm^2. This corresponds to an energy loss of 203 Mev for passage through the counter parallel to its symmetry axis. A singly charged particle (with velocity approximately c) radiates 338 quanta of Cerenkov radiation in the visible range of 4,000 to 7,500 Angstroms per cm of path in the glass. The Cerenkov energy lost in the same region is 806 ev/cm.

III. OPERATION AND CALIBRATION

A photon incident upon the spectrometer initiates a cascade shower whose energy is largely absorbed in the glass. The total Cerenkov radiation produced by the electrons in such a shower is essentially proportional to the energy of the initial photon, as all electrons having energies greater than about 0.5 Mev emit nearly the same amount of Cerenkov radiation per cm of path. At energies on the order of several hundred Mev a decreasing percentage of the total shower is actually contained in the glass, thus making the spectrometer not quite linear in its response.

By use of a standard light source the gains of all four spectrometer photomultipliers were equalized by varying the voltage on each one individually. The requirement that the photon telescope be triggered insured that all showers began at the same place in the system. The resolution of the counter is markedly enhanced by these two factors.

The spectrometer has been calibrated up to 1.4 Bev with monoenergetic electrons obtained at the UCRL Bevatron. Photons (mainly from π^0 decay) were converted in a lead converter, and the resulting electrons were analyzed magnetically before reaching the spectrometer. A calibration spectrum for 1-Bev electrons is shown in Fig. 3. Spectra for other energies are similar. A gaussian curve was fitted to the experimental points, and the pulse height corresponding to the peak of the distribution was taken as the characteristic response of the spectrometer for this energy. The width of the gaussian distribution at half maximum is approximately 50% of the pulse height at the peak. As shown in Reference 2, this value is essentially constant above 200 Mev but increases below that. If we adopt the criterion that two such distributions can just be resolved if their peak positions differ by 60% of the width at half maximum, the resolution of the spectrometer is seen to be 30%. This has been verified experimentally. The calibration curve in Fig. 4 shows peak pulse heights obtained in this manner plotted versus the corresponding energy. The energy spread of the calibration electrons was 10% below 400 Mev and 20% above 400 Mev. The statistical uncertainties of the positions of the peaks of the pulse-height distributions are shown. This calibration has been compared with the pulse distribution produced by cosmic-ray μ mesons so that they may be used for standardization of the spectrometer at any time. This is useful for monitoring stability during extended experiments.

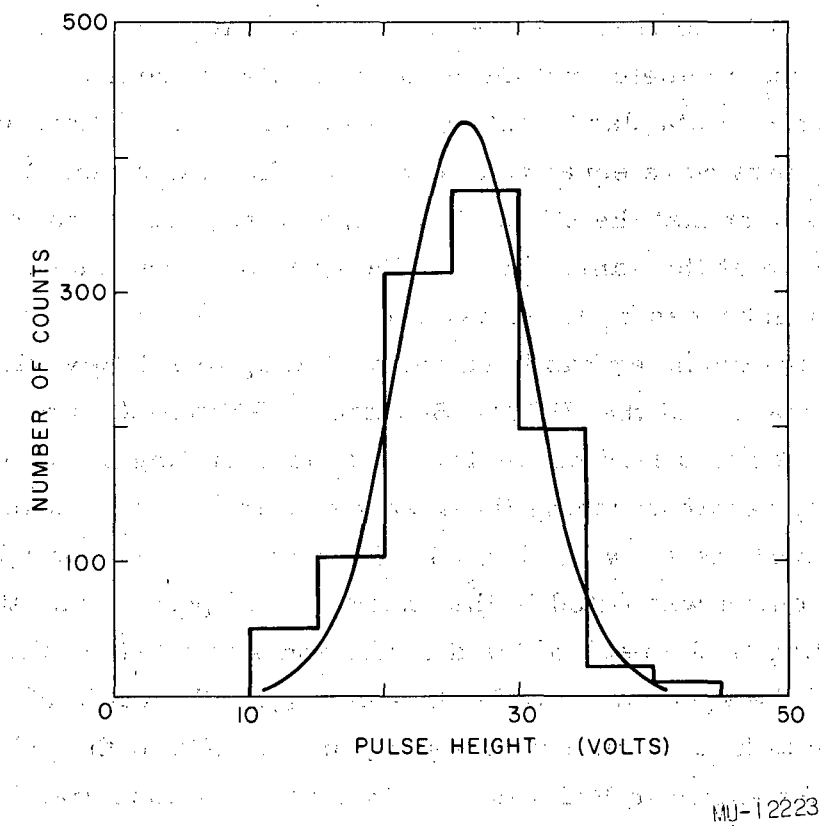

Fig. 3. A calibration spectrum of electrons of 1 Bev energy showing the number of counts per channel plotted against the mean channel pulse height. The experimental histogram has been fitted by a Gaussian normalized to the same area. The Gaussian has a full-width at half-maximum of 10.4 volts, which gives an energy resolution of 25%.

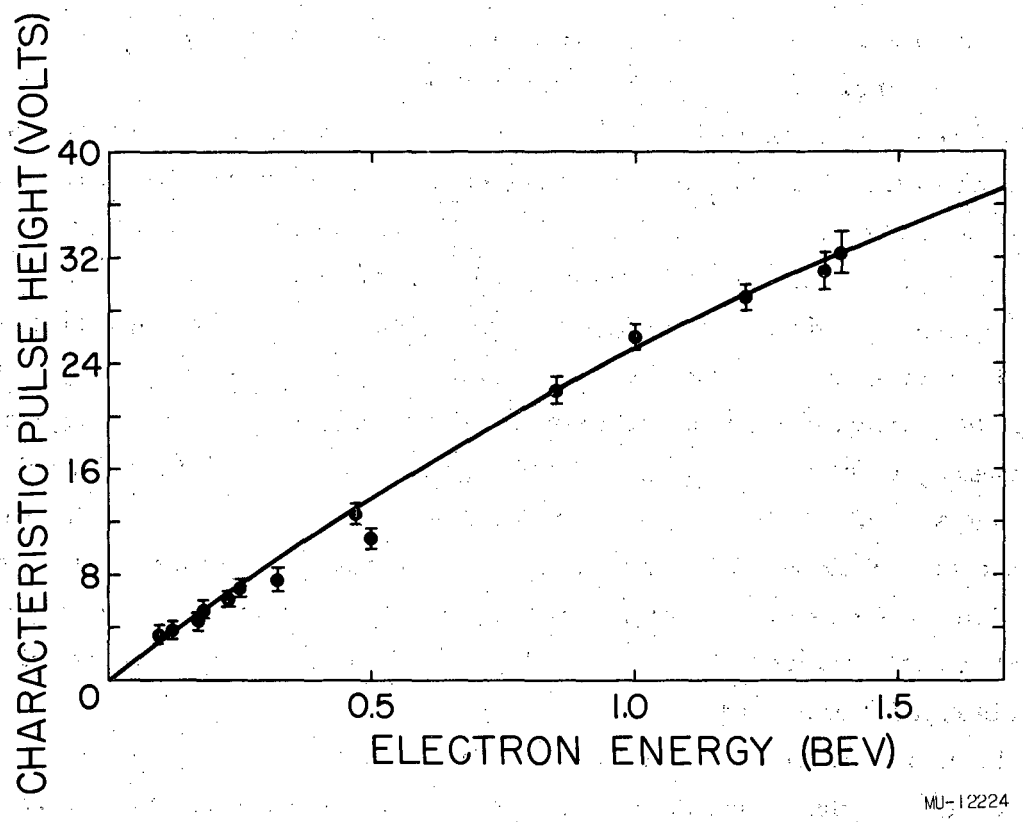

Fig. 4. The calibration curve of the spectrometer showing the characteristic pulse height in volts as a function of the calibrating electron energies in Bev. The energy spread of the electrons was 10% below 0.4 Bev and 20% above 0.4 Bev. The statistical uncertainties of the peak positions of the pulse-height distributions are indicated. The solid curve is of the form discussed in the text and has a value of b equal to 1.6×10^{-4} Mev^{-1}.

The width of the peaks is attributed to the statistical nature of the cascade shower, the escape of varying parts of the shower from the glass, the statistical fluctuations in the number of photoelectrons liberated from the photocathodes of the tubes by the Cerenkov photons, and the fact that the calibration electrons were not actually monoenergetic but had an energy spread of about 10% or 20%.

IV. DISCUSSION OF CALIBRATION

The energy response of the counter can be somewhat anticipated by the use of curves such as are contained in Kantz and Hofstadter[7] and Wilson.[8] Applying their curves to this counter, one obtains the containment factor for several energies. These are shown in Fig. 5.

The results from Wilson (Curve A), who uses the correct cross sections but assumes an infinitely wide medium in a Monte Carlo calculation, are higher than those from Hofstadter (Curve B). To obtain the latter curve it is necessary to assume that Approximation B of shower theory[9] holds. In this approximation all elements are the same if lengths are expressed in radiation lengths and energies in critical energies. Converting in this manner the containment factors measured by Hofstadter for several elements at one energy to several energies in the glass, we obtain the curve B (Fig. 5). The curve A predicts too large a containment factor because of the assumption of infinite absorber width. The curve B predicts too rapid a decrease with energy due to the reduction in validity of Approximation B, particularly in heavy elements at lower energies, where the measurements from which curve B was obtained were made.

The near linearity of the containment-factor curves suggests that above 100 Mev, for a limited range, the containment factor C(E) may be written in the form

$$C(E) \equiv E_c/E = a\,(1-bE),$$

where E_c is the energy contained in the spectrometer, E is the energy of the original photon, and a and b are constants. The constant a determines the zero energy value. The shape of the curve is given by the parameter b; evaluating this constant from the curves we obtain for

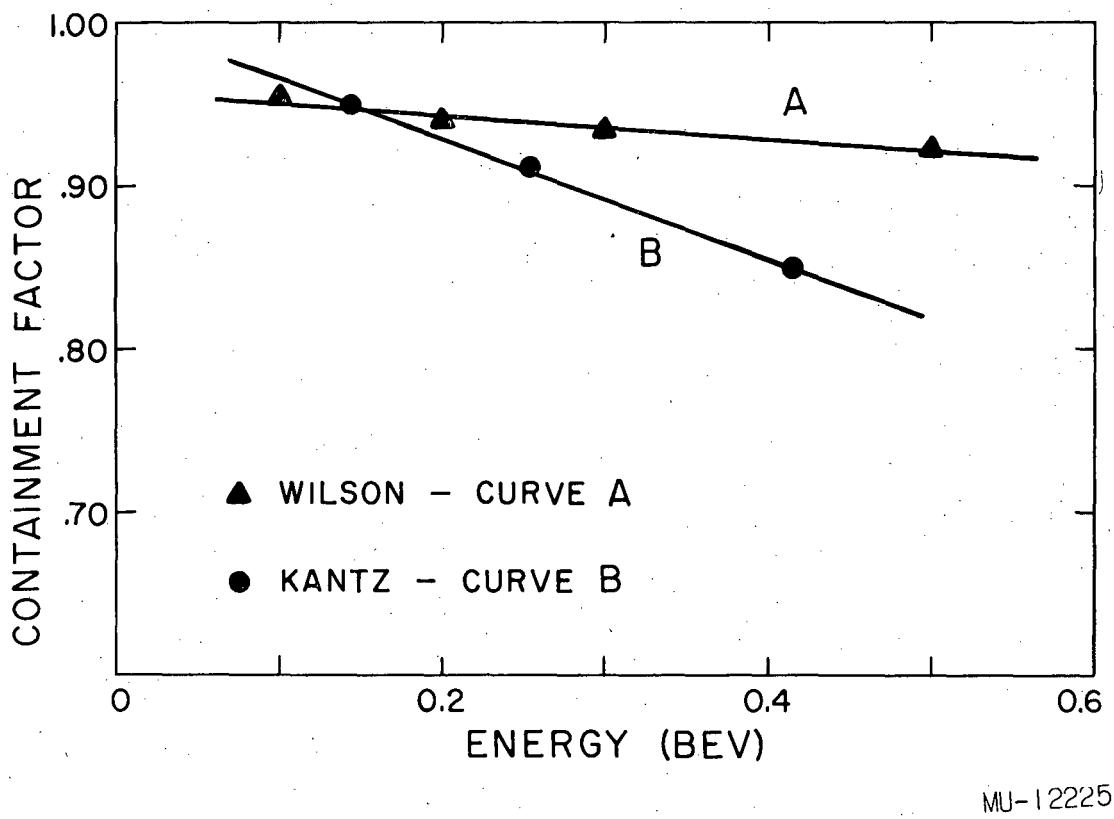

Fig. 5. Energy dependence of the containment factor of the spectrometer as calculated by use of the curves in References 7 and 8.

curves A and B respectively 0.8×10^{-4} Mev^{-1}, and 3.7×10^{-4} Mev^{-1}. The value of b obtained from the solid curve of the above form fitted to the spectrometer calibration is 1.6×10^{-4} Mev^{-1}. This value is intermediate between the two others and indicates that the instrument has a quite reasonable energy response.

The resolution can be improved by collecting a greater fraction of the Cerenkov light and by absorbing a greater fraction of the shower. Both improvements are being incorporated in a new spectrometer now under construction.

ACKNOWLEDGMENTS

The authors wish to especially thank Lt. Malvern H. L. Jester, U.S.N., who helped in the early design and construction of the spectrometer and assisted in some of the calibrations. In addition, the authors which to thank the operating crews of the UCRL Synchrotron and Bevatron for their aid in the calibrations.

This work was done under the auspices of the U.S. Atomic Energy Commission.

REFERENCES

1. Pugh, Frisch, and Gomez, Rev. Sci. Instr. 25, 1124 (1954).
2. M.H.L. Jester, A Total-Absorption Spectrometer for Gamma Rays (M.S. Thesis, U.S. Naval Postgraduate School, Monterey, California), UCRL-2990, May 1955.
3. Wallace, Jester, and Brabant, Phys. Rev. 100, 962 (A) (1955).
4. J. Brabant, Kenney, and Wallace, Bull. Am. Phys. Soc. Series II, 1, No. 5, 251 (1956).
5. Brabant, Cork, Horowitz, Moyer, Murray, Wallace, and Wenzel, Phys. Rev. 101, 498 (1956).
6. Brabant, Cork, Horowitz, Moyer, Murray, Wallace, and Wenzel, Phys. Rev. 102, 1622 (1956).
7. A. Kantz and R. Hofstadter, Nucleonics 12, No. 3, 36 (1954).
8. Robert R. Wilson, Phys. Rev. 86, 261 (1952).
9. B. Rossi, "High Energy Particles," Prentice-Hall, New York, 1952, p. 224.