UCRL 3508
c.2

UNIVERSITY OF CALIFORNIA

Radiation Laboratory

TWO-WEEK LOAN COPY

This is a Library Circulating Copy which may be borrowed for two weeks. For a personal retention copy, call Tech. Info. Division, Ext. 5545

BERKELEY, CALIFORNIA

DISCLAIMER

This document was prepared as an account of work sponsored by the United States Government. While this document is believed to contain correct information, neither the United States Government nor any agency thereof, nor the Regents of the University of California, nor any of their employees, makes any warranty, express or implied, or assumes any legal responsibility for the accuracy, completeness, or usefulness of any information, apparatus, product, or process disclosed, or represents that its use would not infringe privately owned rights. Reference herein to any specific commercial product, process, or service by its trade name, trademark, manufacturer, or otherwise, does not necessarily constitute or imply its endorsement, recommendation, or favoring by the United States Government or any agency thereof, or the Regents of the University of California. The views and opinions of authors expressed herein do not necessarily state or reflect those of the United States Government or any agency thereof or the Regents of the University of California.

UCRL-3508

UNIVERSITY OF CALIFORNIA
Radiation Laboratory
Berkeley, California

Contract No. W-7405-eng-48

DESIGNING FOR SAFETY IN HYDROGEN BUBBLE CHAMBERS

H. Paul Hernandez, John W. Mark, and Robert D. Watt

December 4, 1956

Printed for the U. S. Atomic Energy Commission

DESIGNING FOR SAFETY IN HYDROGEN BUBBLE CHAMBERS

Contents

Abstract 3

Including Safety in Design 4

The Amount of Safety Effort 5

Schematic Approach to Estimation of Safety 6

The Hazard 8

- Boiling of Hydrogen Liquid 8
- Strength of Glass at Low Temperature 17
- Combustion of Hydrogen and Air 17
- Detonation of Hydrogen and Air 19

The Vent System 24

Handling Hydrogen Safely 25

- Building Design 25
- Safety Survey 28

Conclusion 30

DESIGNING FOR SAFETY IN HYDROGEN BUBBLE CHAMBERS

H. Paul Hernandez, John W. Mark, and Robert D. Watt

Radiation Laboratory
University of California
Berkeley, California

December 4, 1956

ABSTRACT

The principal hazards of operating a liquid hydrogen bubble chamber are failure of equipment (due to overpressure) and uncontrolled escape of hydrogen gas, which may cause an explosion. If safety considerations are incorporated in planning from the job beginning, components can be designed to reduce or eliminate the probability of accidents arising from the known hazards.

The degree of safety, the hydrogen safety-vent system, and the hazards, and operation of the liquid hydrogen bubble chambers at UCRL are discussed.

DESIGNING FOR SAFETY IN HYDROGEN BUBBLE CHAMBERS

H. Paul Hernandez, John W. Mark, and Robert D. Watt

Radiation Laboratory
University of California
Berkeley, California

December 4, 1956

INCLUDING SAFETY IN DESIGN

From the beginning of and throughout a job, it is important that safety be considered in the designing of equipment. Although it may not cover every case, the best information available should be applied, thus reducing the probability of an accident. As many safety factors as possible should be built into the equipment itself, so that the degree of safety will always be the same regardless of who uses the equipment.

The requirement for safety is a continuing thing, and must continually be reviewed as new information and techniques become available or as changes are made in design or operation.

THE AMOUNT OF SAFETY EFFORT

The question, "How much safety effort is required?" is difficult to answer. It depends on many factors, among which are these:

1. Magnitude of a possible accident. The safety requirement for equipment that may cause large disasters is obviously greater than for equipment that would produce small accidents.
2. Duration of hazard. The length of time during which the risk is present may influence its importance.
3. Location of hazardous equipment. If hazardous equipment is used in a densely populated area, more safety precautions are required than if it were located in an isolated area.
4. Price paid for an accident. If the cost of an accident would be death or injury, then more safety is required than if only cost or delay were involved. On an important program, however, where schedules must be maintained, extreme safety precautions may be employed to reduce the risk of delay.
5. Operating personnel. Regardless of the amount of time spent in designing for safety, and how well the probabilities of an accident are known, the actual degree of safety depends finally upon the intelligent execution of the safety and operating procedures by informed personnel.
6. Safety codes. Safety codes are important for the determination of how much safety is required. These act as guides, and aid in establishing the dollar cost of safety. However, they represent a minimum acceptable standard, and--as with any standard--they force safety improvement on some but may blunt the judgment of others so that they become less safe. A safety code is better used as an aid than as a crowbar.
7. Probability of an accident. When a device is well understood and has been in existence a long time--for example, a fired steam-pressure vessel --the causes and probabilities of accidents are well known. A boiler code exists that is tailored to fit boiler problems.

In the design and operation of hydrogen bubble chambers, however, there is very little experience: some of the properties of liquid hydrogen are not known; and existing safety codes are not particularly applicable. This makes it very difficult to estimate the probability of an accident, and requires much effort toward understanding the principles and operation of the bubble chamber and of the safety devices employed.

SCHEMATIC APPROACH TO ESTIMATION OF SAFETY

Safety is not absolute. Equipment is not either strictly safe or unsafe, but has all degrees of safety. The relation between accident probability and the amount spent for safety is schematically shown in Fig. 1.

The diagram can be constructed quite accurately for equipment in common use--a fired steam-pressure vessel, for example. The probabilities of an accident's occuring if no effort is made for safety, as well as the reduction of accidents as various codes are satisfied, can be obtained from accident statistics. From the slope of the curve it is possible to see how much safety is gained per dollar spent. The curve also indicates how much effort has been made toward accident prevention. It can be seen, too, that codes do not guarantee safety.

For accidents involving liquid hydrogen, however, the diagram cannot be constructed exactly, because the probability of an accident is difficult to determine in a field that is, as yet, without statistical records. Estimating all the failures that can be thought of, going carefully over every item of equipment and studying what may happen if any component fails or is misoperated, permits determination of what it will cost to correct the conditions considered. How safe a new system is cannot be determined, because of the high probability of errors of omission in estimating or in designing, but the cost of applying various known safety improvements is quite definite.

The shape of the curve shown here has been estimated: however, it is based on the experience that a little thought does a lot of good, and that, regardless of how much money is spent, a system will never be perfectly safe. For this example the probability of minor accidents is shown to be greater than that of major accidents; however, these probabilities depend on the particular case, and could be reversed. Again, the lines would not be sharp, as the transition from minor to major accidents is gradual and continuous.

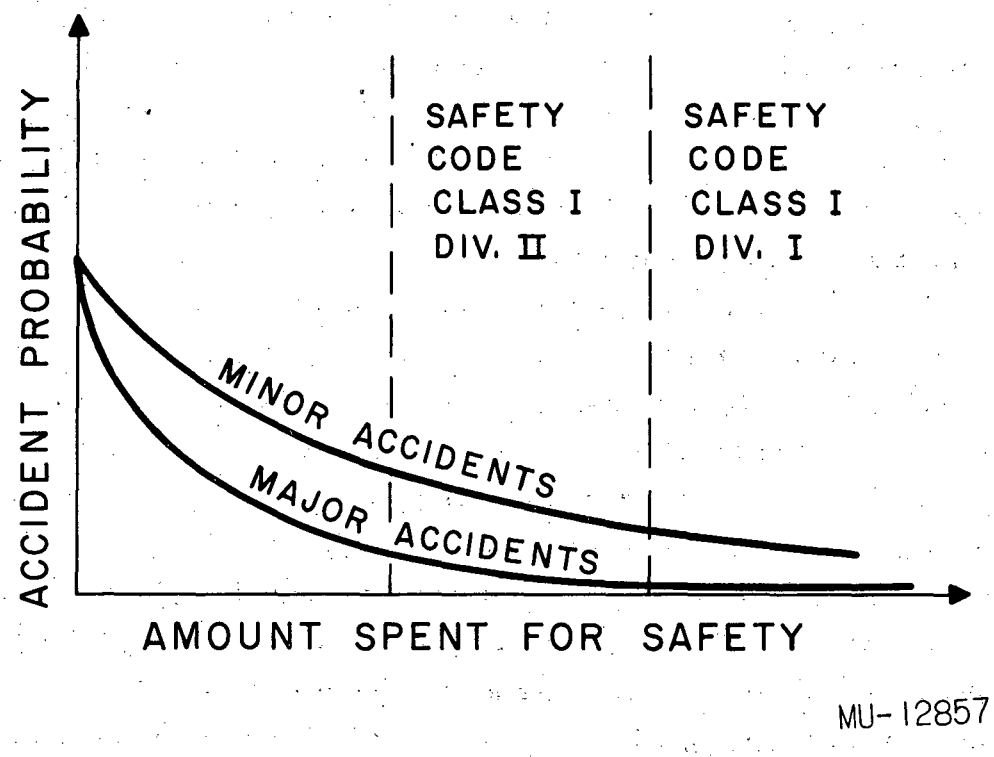

Fig. 1. Accident probability vs. amount spent for safety.

THE HAZARD

It must be emphasized that until sufficient experience is gained, each case must be studied separately. The hazard must be evaluated and ways found to lessen or eliminate it.

There are at present four hydrogen bubble chambers at UCRL. The 4-in. chamber has been retired to development work; the 10-in. bubble chamber is being used for physics experiments at the Bevatron; and two others--the 72-in. and a 17-in.--are under design and some construction has been started. With all of them, however, the hazards are essentially the same and the means of avoiding the hazards are alike in principle.

In the bubble chamber program, effort is made to prevent any one failure from compounding and causing a series of reactions; to keep air and hydrogen separated; and to design equipment that could withstand internal explosions.

The primary hazards of operating a liquid hydrogen bubble chamber are failure of equipment due to overpressure, and the uncontrolled escape of hydrogen gas, which may result in an explosion. The overpressure can result from the boiling of hydrogen liquid; or from the heating, combustion, or detonation of hydrogen gas.

Boiling of Liquid Hydrogen

Liquid hydrogen at one atmosphere boils at $20^{\circ}K$ ($-253^{\circ}C$). A bubble chamber is operated at about 5 atmos, at which the liquid boils at $27^{\circ}K$ (see Fig. 2). If the pressure of the liquid is suddenly lowered the liquid boils violently. The heat of vaporization of this conversion absorbs heat from the liquid and the temperature of the liquid drops; when it comes to equilibrium with the pressure, boiling stops. This pressure release and boiling can occur if a glass window breaks. From the time when the bubble chambers were designed, it has been assumed that the glass might fail unexpectedly, therefore the design must be such that the equipment will remain in a safe condition throughout the events following the glass failure.

On the 10-in. bubble chamber the chamber is surrounded by an insulating vacuum; if a glass fails, the pressure in the liquid instantly equalizes with the vacuum-tank pressure. This sudden change in pressure, besides causing the phenomenon described above, also permits the gas to heat by

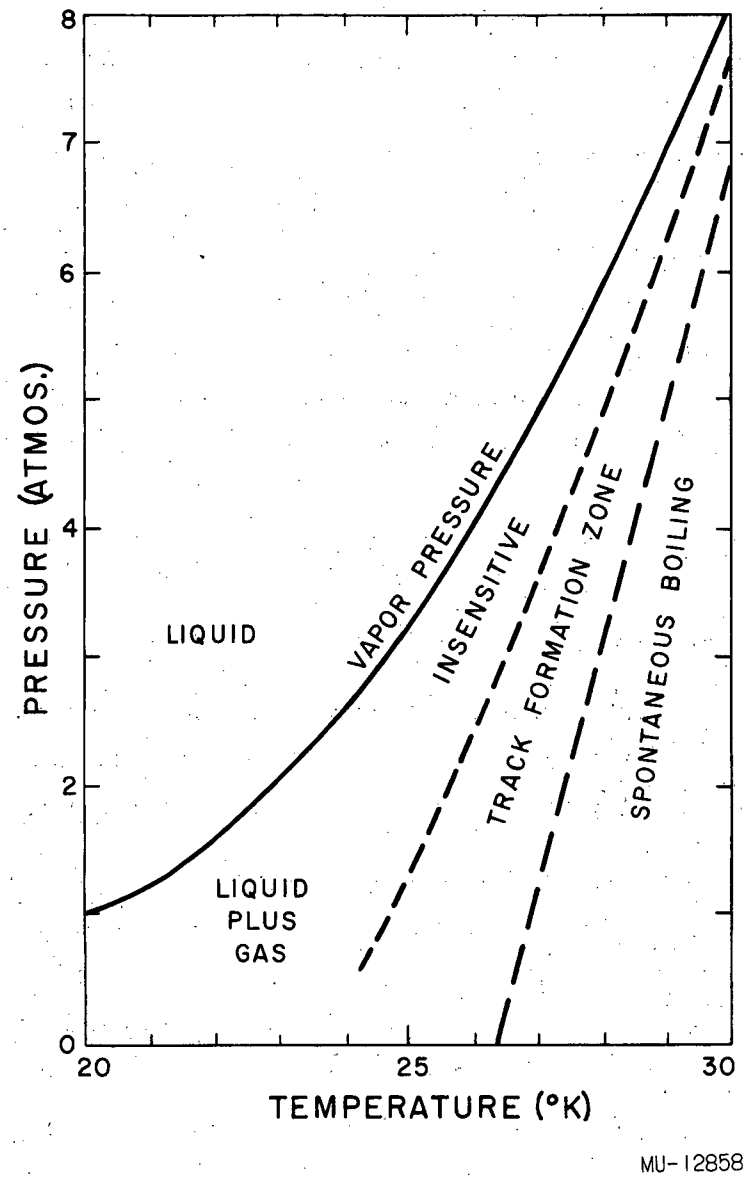

Fig. 2. Pressure-temperature diagram.

conduction from the room-temperature vacuum-tank walls, because the insulating vacuum has been broken. This also raises the pressure; when the pressure in the vacuum tank exceeds 1 atmos the hydrogen gas escapes through the overpressure poppet valve (Fig. 3) up the vent and is burned. The liquid continues to boil until it has all disappeared. (The vent system is discussed in another section.)

If the top glass breaks on the 72-in. bubble chamber (see Figs. 4, 5, and 6), the equilibrium pressure will be about 2.5 atmos; the hydrogen heat shield will be designed to withstand this. The main insulating vacuum is not lost, therefore the liquid rests in this new equilibrium state until the hydrogen is pumped back into the high-pressure storage bottles. The 72-in. bubble chamber is designed with only one glass, which is on the top, so that a glass failure will not allow the liquid hydrogen to drop onto the bottom of the vacuum tank.

If the bottom glass on the 10-in. bubble chamber breaks and the liquid hydrogen is dropped onto the bottom of the vacuum tank, which is at room temperature, the liquid boils so fast that an explosive gas formation occurs. This instantaneous formation of gas raises the pressure so rapidly that it was questionable whether the vent system would carry away the gas fast enough to prevent the rupture of the vacuum tank.

Therefore, before the 10-in. bubble chamber was put into operation, a test was performed by Mark, Watt, and Richards[1] to determine this amount of overpressure due to boiling and how rapidly the pressure would build up. Some of their results are shown on Fig. 7. This test showed that when 5 liters of hydrogen liquid is suddenly released into a vacuum of 80 liters, the pressure goes to 52 psig in about 300 millisec.; the pressure is back to normal after about 1.5 sec.

This test has shown that in the event of the sudden release of liquid hydrogen into a vacuum chamber, the resulting rate of pressure rise and the maximum pressure depend on

(a) the ratio of the vacuum space to liquid volume,

(b) the diameter and length of the vent, and

---

[1] Mark, Watt, and Richards, Pressure Rise in Vacuum Chambers from Release of Liquid Hydrogen, UCRL-3136, Sept. 1955.

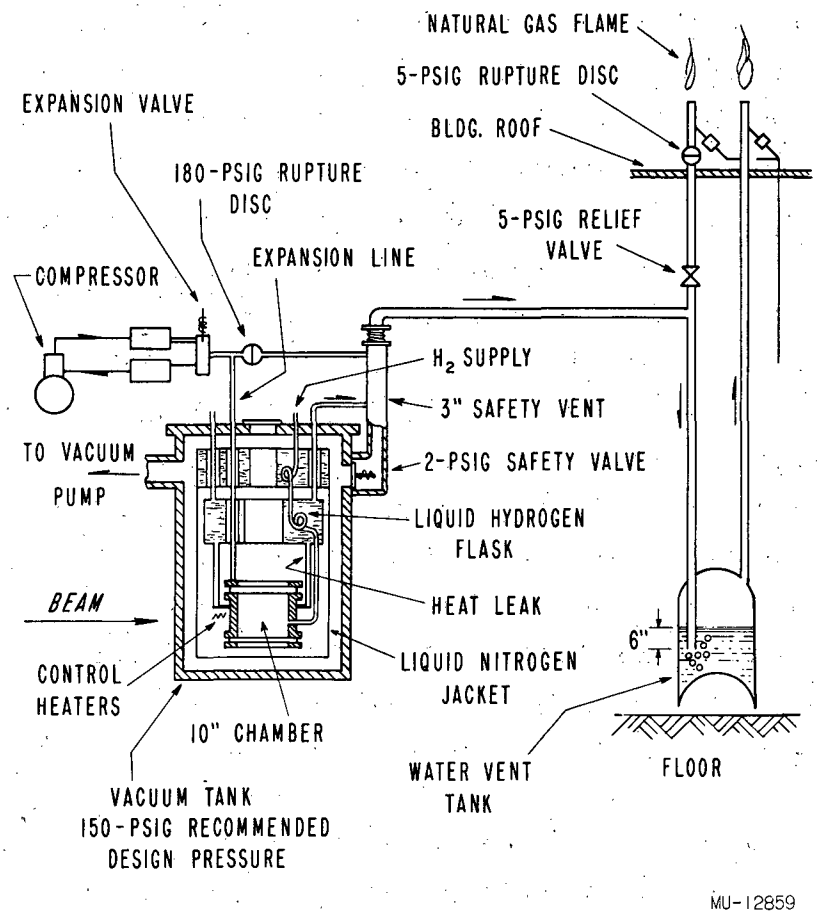

Fig. 3. Ten-inch bubble chamber with safety vent system.

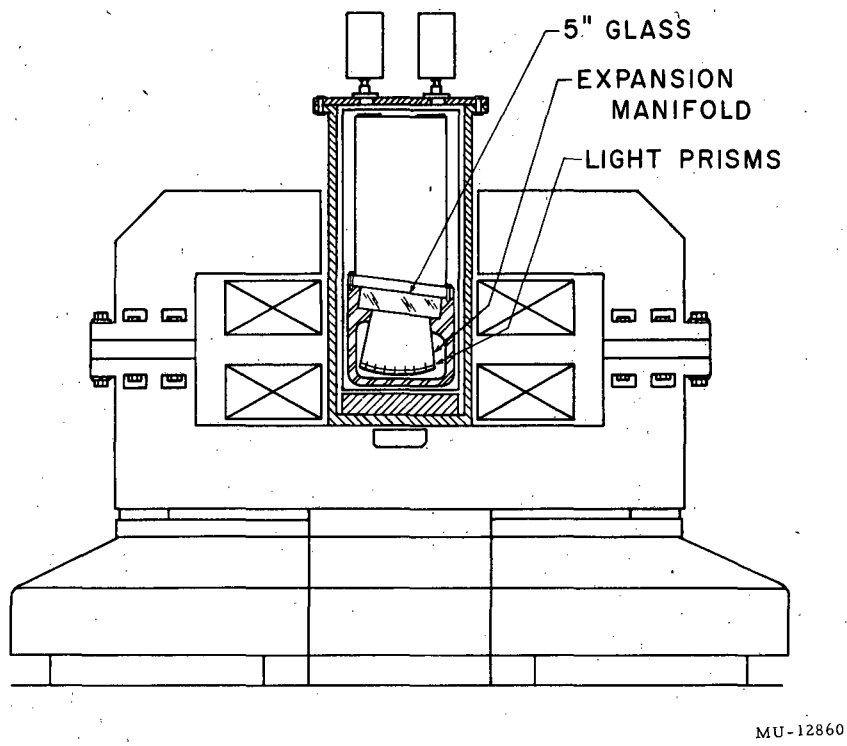

Fig. 4. Side elevation of the 72-inch bubble chamber (preliminary).

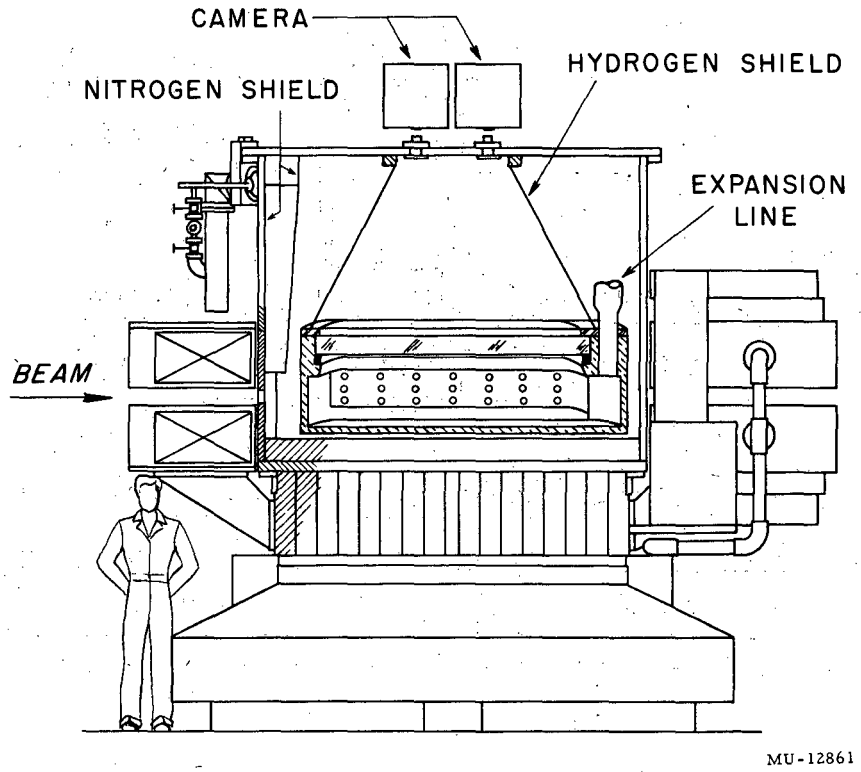

Fig. 5. End elevation of the 72-inch bubble chamber (preliminary).

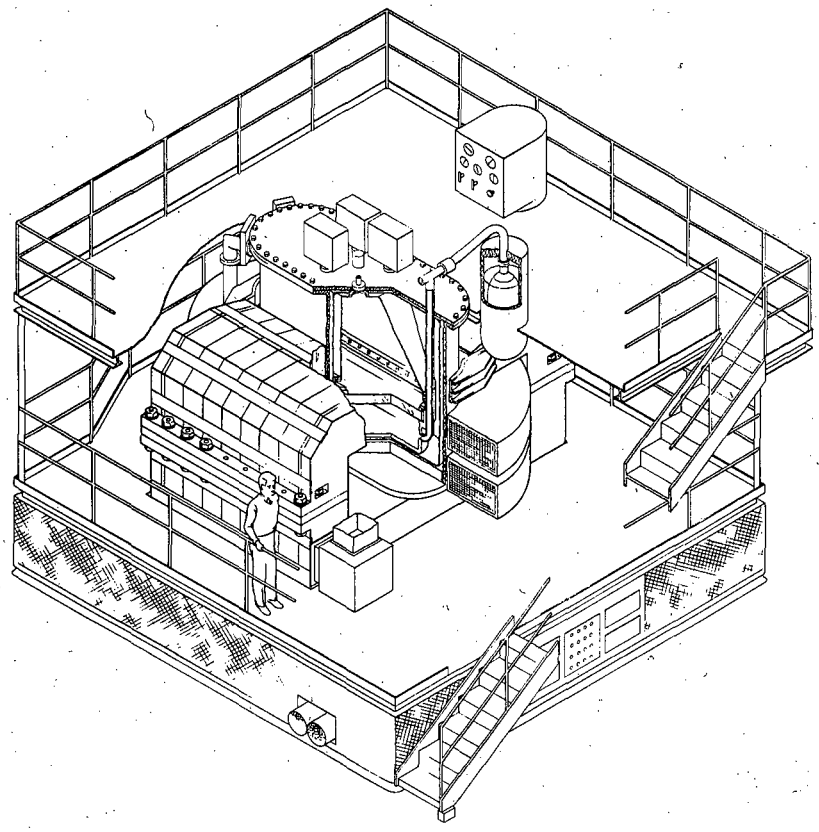

Fig. 6. General arrangement of the 72-inch bubble chamber (preliminary).

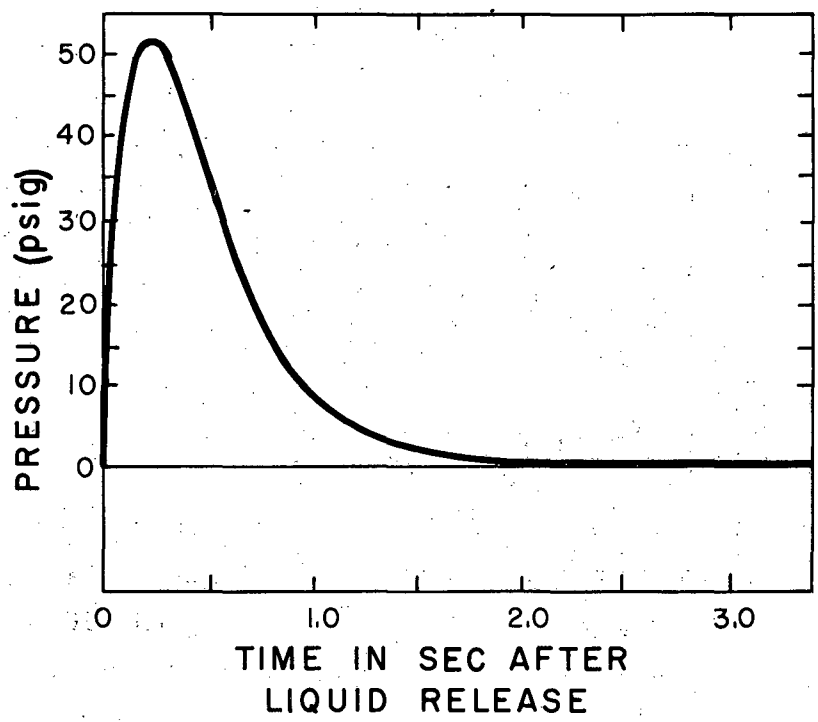

MU-12862

Fig. 7. Pressure rise in vacuum chamber from release of liquid hydrogen.

(c) the restrictions in the vent line.

The larger the ratio of the vacuum space to the liquid volume, the slower the rate of rise and the lower the maximum pressure. The largest practical vent line should be used with vacuum systems for liquid hydrogen bubble chambers. From the results of these tests it is believed that a pressure rise of about 4 to 5 atmos is possible for the 10-in. bubble chamber used with the 3-in. vent line.

In the 72-in. bubble chamber the vacuum-to-liquid ratio is about nine, as compared with eleven for the 10-in. chamber. Since these are of the same order of magnitude, pressures of the same order might be expected with comparable vents. Should the hydrogen shield fail to hold the 2.5-atmos pressure previously described, the vacuum would be broken, and fast boiling would cause a high pressure in the vacuum system. The 72-in. vacuum system is designed, however, to withstand 14 atmos at the yield point.

The gas vented during the early runs was not ignited, but allowed to vent to the atmosphere. During one of the runs in this test there was a spontaneous explosion after the hydrogen left the vent and mixed with air. The only damage was the burning of some wire insulation and some rags in the immediate area. A guess as to the cause is a static discharge. On the successive runs in this test the hydrogen was burned, and it was during this period that it was decided that the bubble chamber group would burn all large amounts of discharged hydrogen, rather than let it mix with air and risk the possibility of an explosion.

The burning of the intentionally ignited gas was very impressive. The flame came out about 40 ft from the vent and lasted only about 1.25 sec from the start to finish. This was 6 liters of liquid hydrogen that was burned, and the heat was felt 100 ft away. Impressive as the flame was, the noise was very small compared with the blast that ignited spontaneously.

It was decided to burn the gas released in cycling the chamber, and thus to have known conditions, rather than allowing free hydrogen to escape into the atmosphere and ignite in some unknown location, possibly with an explosion. There is a threshold quantity, however, that is considered too small to burn; at UCRL in Berkeley we do not burn anything less than 2 liters of liquid per hr vented to the outside of a building. The practice of burning

hazardous gases is common in oil refineries, and also in hydrogen furnaces. An explosion above a vent line cannot be risked because it may cause building damage, injuries to people in adjacent buildings from broken windows, or damage to our public relations in this densely populated area.

Strength of Glass at Low Temperature

The strength of glass at liquid hydrogen temperatures and under long- and short-time loadings has been investigated by R. H. Kropschot at the National Bureau of Standards Cryogenic Laboratories at Boulder, Colorado.[2] It was found that there is less than 1 % probability that borosilicate crown glass will break if stressed to 8200 psig in bending and held indefinitely at $20^{\circ}K$.

To date there have not been any glass failures on any of the bubble chambers.

Combustion of Hydrogen and Air

The ordinary burning of a mixture of hydrogen and air--called combustion by an engineer or a hydrogen-oxygen reaction by a chemist--can take place within broad limits of approximately 4.1 % to 74.2 % hydrogen by volume. When combustion occurs very rapidly, it is called an explosion.

When hydrogen and air are burned the reaction is $H_2 + 1/2\ O_2 + 1.89\ N_2 = H_2O + 1.89\ N_2 + \text{heat}$. The stoichiometric mixture, which, when it burns, uses up exactly all of the oxygen in the air, contains 30 % hydrogen by volume. The heat of combustion converts the water to steam and raises the temperature of the steam and the nitrogen gas. When this occurs in a closed vessel, the temperature rise from T_1 to T_2 and the change in the number of moles from n_1 to n_2 cause a change in pressure.

$$\frac{P_2}{P_1} = \frac{n_2}{n_1} \frac{T_2}{T_1}.$$

This assumes an adaobatic process, uniform temperature throughout the

[2] R. H. Kropschot and R. P. Mikesell, An Experimental Study of the Strength and Fatigue of Glass at Very Low Temperatures, National Bureau of Standards, Boulder, Colorado, Technical Memorandum No. 37, June 1956.

volume, and no dissociation of the combustion products, and results in a calculated pressure slightly higher than actually is found.

This maximum pressure, when starting at 1 atmos and at ambient temperature, is about 9 atmos.[3, 4] Other stoichiometric gas-air mixtures when burned at ambient temperature yield pressures as follows:

	$P_2 P_1$	% Gas
Hydrogen-Air	8.8	29.5
Acetylene-Air	11.5	7.7
Propane-Air	10.8	4.0

All other mixtures result in lower pressures and slower burning velocities.

The heat of combustion of hydrogen 29.15 kg cal/g, is very high on a weight basis as compared with 1.29 kg cal/g for 75 % dynamite, or 0.75 kg cal/g for gunpowder. However, the mass of hydrogen per volume unit of 30 % hydrogen-air mixture at 1 atmos pressure and ambient temperature is only 0.64 per ft^3 of mixture. So, although the heat of combustion is high per unit weight, the gas is so light that the total heat of combustion of a volume unit of air-hydrogen mixture is relatively low.

The combustion pressure is constant for a given mixture, initial pressure and temperature, and geometry, regardless of the volume of gas burned. Increasing the initial pressure and temperature, however, causes the final pressure to rise. In bubble chambers the vent is always at atmospheric pressure and ambient temperature, and therefore the combustion pressure is known.

The combustion of hydrogen and air is well known in theory and has been proven by many experiments. But in order to gain familiarity with and to proof-test equipment, we conducted a simple combustion experiment with

---

[3] Chelton, Mann, and Hernandez, Pressure Rise Due to Hydrogen-Oxygen Reaction, UCRL Engineering Note 4311-14 M33, Oct. 1956.

[4] H. P. Hernandez, Combustion, UCRL Engineering Note 3320-01 M120, May 1956.

the setup shown in Fig. 8, using the 50-gal water-seal tank of the 10-in. bubble chamber vent system. The test results are shown in Table I, and are self-explanatory. The highest pressure indicated was about 120 psig* on the first run with 30% hydrogen and with the tank sealed.

Detonation of Hydrogen and Air

In the combustion of hydrogen and air at 1 atmos and ambient temperature, the burning velocity is about 250 cm/sec. However, when the mixture is ignited at one end of a tube of uniform bore, the ends of which may be either open or closed, the initial slow-moving combustion wave accelerates rapidly to a detonation wave whose velocity remains constant regardless of the length of the tube.[5] This shock wave moves with a detonation velocity of about 2800 m/sec when the initial temperature is 20° C and the initial pressure is 1 atmos.

A shock wave build-up is analogous to the development of an ocean wave except that once it gets steep it does not break but continues on. A shock wave compresses the gas mixture, which raises the pressure P_1. Now when combustion occurs the resulting pressure may be from 18 to 128 atmos[6] instead of about 10 as before.

Factory Mutual in their experiments[6] observed that the peak axial pressures were different for various length-to-diameter ratios. This difference is shown in Fig. 9 for acetylene and air. For hydrogen and air the type of variation may account for the discrepancy between the detonation pressure of 18 atmos calculated by the Chapman-Jouguet theory and the observed pressures of 80 atmos at UCRL and 128 atmos at Factory Mutual.

Peak pressures of up to 12,000 psig over very short periods of time have been reported, but the strain energy may be below that required to reach failure.

---

* This was read on a Bourdon Gage that is known from previous experience to indicate within about 10 psi of a condenser-type electronic pressure gage in this response range. For a proof test this gage was satisfactory, but it is not recommended for accurate work.

5 B. Lewis and G. von Elbe, Combustion, Flames and Explosions of Gases, Academic Press, New York 1951, p. 590-607.

6 J. B. Smith, Explosion Pressures in Industrial Piping Systems, Factory Mutual Lab., Boston, Massachusetts, April 1949.

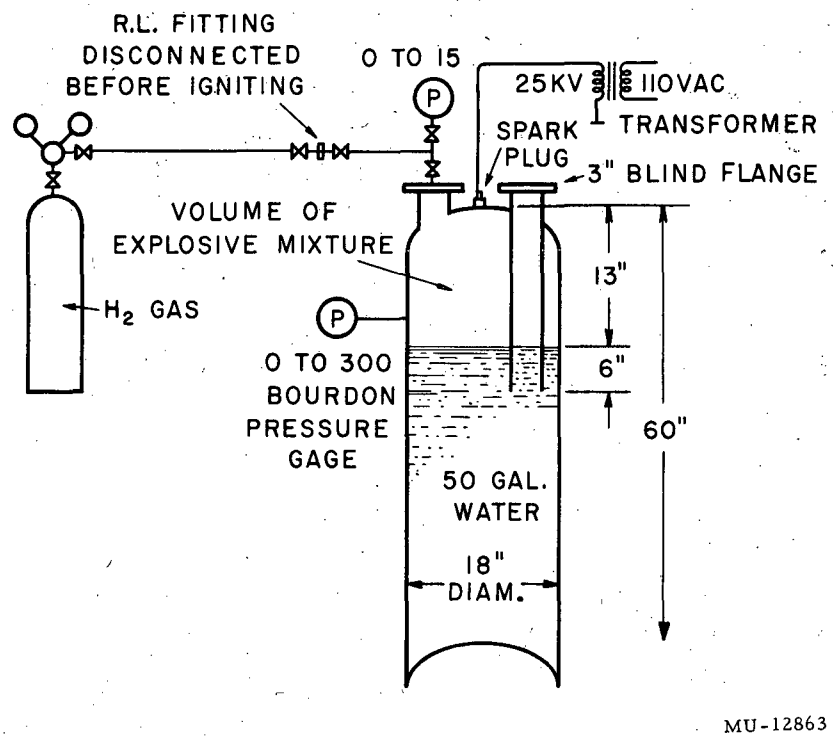

Fig. 8. Arrangement for proof-testing the 10-in. bubble chamber water-seal tank.

Table I

RUN NO.	Volume of explosive mixture (ft^3)	Percent hydrogen gas by volume	Maximum tank pressure (psig)	Gas diffusion time (min)	Noise	REMARK
1	1.9	30	120	5	Slight ping	After combustion, tank was coated white on inside. Temperature estimated by feel at ~ 120°F. Tank pressure at firing-1 atmos.
2	1.9	30	120	3	Slight whoosh	Three-inch blind flange removed; 4 gal of water blew about 60 ft high. Thin mixture of water and gas similiar to a garden hose stream. Stream lasted about 4 sec (estimated).
3	1.9	30	100	1	Slight whoosh	Three-inch blind flange removed. Test similiar to 2. Object to check height of water at 60 ft, and that water level in tank falls until bottom of 3-in. pipe is reached. Five gal. water lost.
4	2.5	40	75	3	Less Noise	Flanges on. More H_2 and more exp mix gave lower pressure.
5	8.9	30	15	2	Soft long whoosh	Sounded as if burning moved slowly through the tank. No water in tank; possibly poor diffusion.
6	8.9	32	50	3	Very soft noise	Spark plug moved to side. Attempt made to get out previous combustion gases and to get a good mixture of H_2 and air. Tried to fire with tank at 6 psig; would not fire. Checked equipment. Fired at 1 atmos. All ports covered.
7	8.9	30	0	10	Loud bang like Fourth of July aerial bomb	Top flanges removed so noise got out. Shock wave felt at 15 ft. Flash-back safe but noisy.

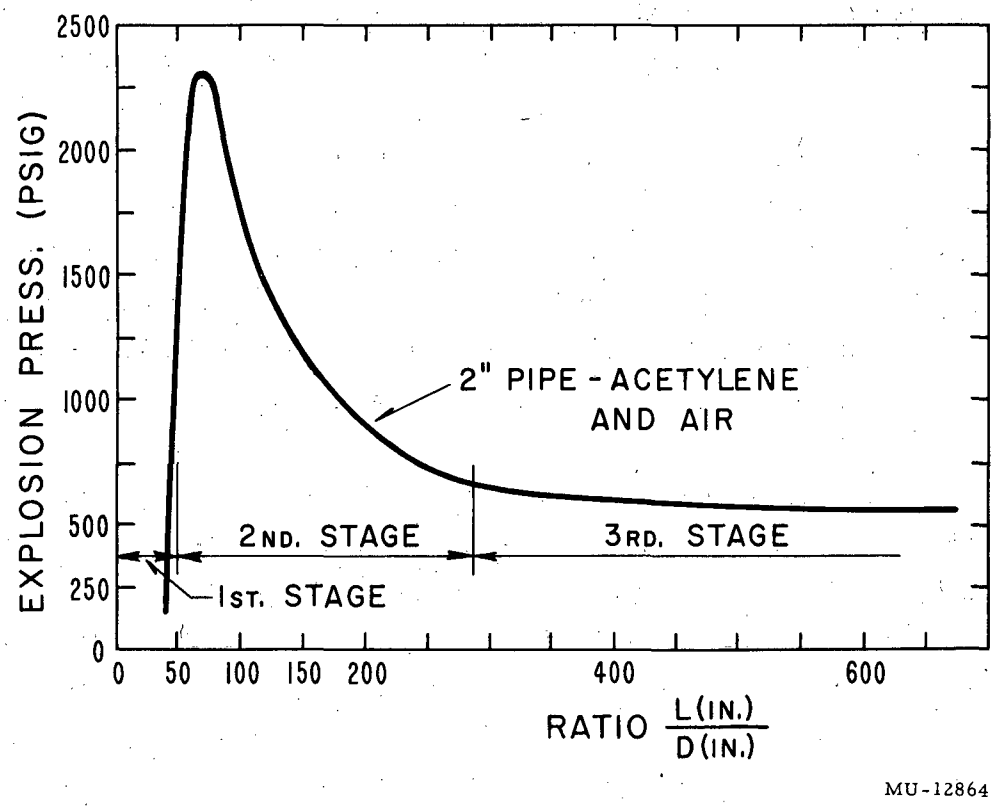

Fig. 9. Explosion pressures of acetylene mixtures in 2-inch pipe vs. length-to-diameter ratio. Axial pressure measured at one end; ignition at other end. Initial pressure is zero psig with both ends closed. Pressure value corresponds to that of the thickest disk that would rupture, plus one-half of the pressure that almost ruptured the disc of the next greater thickness.

In recent experiments at UCRL pressures of 1200 psig have been obtained many times in a 3-in. pipe 20 ft long with 30% hydrogen in air at 1 atmos and ambient temperature.

Because of this possibility of detonation, it is recommended that the water seal be located within about 5 ft of the flame so that a detonation wave cannot be generated, or that the vent line be made sufficiently strong to withstand the wave. This can usually be done with ordinary schedule-40 steel pipe.

In the UCRL system, that part of the vent line that is between the vacuum tank and the water seal is believed to be the safest because it normally contains hydrogen, nitrogen purge gas, or a mixture of these, and does not contain a known ignition source. However, to prevent detonations in this section the vent line can be designed to break up a shock wave periodically, as determined by the L/D ratio, and thus have to contain only simple combustion pressures.

Rupture discs and vent pipes will relieve pressure if the rate of pressure rise is slow, as in combustion.[7] But the rate of pressure rise can be so fast that the whole vessel is subjected to the high pressure before the disc fails; this can occur during detonation. In this case a rupture disc does not relieve the pressure soon enough and the vessel must withstand the detonation pressure or fail.

The behavior of detonation in the vent system is not yet fully understood. We are particularly interested to know under what conditions detonation may occur in the vent system and how it may be prevented. Until this is known, the design pressure of 128 atmospheres is being used on the 72-in. bubble chamber vent system.

---

[7] E. W. Cousins and P. E. Cotton, The Design of Closed Vessels to Withstand Internal Explosion, Chem. Eng. 58, 133 (1951).

THE VENT SYSTEM

The vent system collects, and burns above the building roof, all hydrogen gas from normal or emergency operation. The vent system is purged up as far as the water seal with nitrogen gas and the flame is ignited before hydrogen is used in the system. The 10-in. liquid-hydrogen bubble chamber and safety vent[8] are shown in Fig. 3. The water vent tank is used to stop flashbacks, which might occur if the H_2 flow were below velocity and air diffused down the pipe and mixed with hydrogen gas.

The vertical 3-in. vent that does not go through the water seal allows the system to vent faster in an emergency, and eliminates the risk that water might put out the flame. The natural gas flames have a spark plug operating continuously to keep the flame ignited. A thermocouple in each flame indicates at the bubble chamber rack the flame condition at the outer end of the vent.

An alternate vent design is to omit the water-seal tank and introduce the natural gas into the safety vent at a point near the vacuum tank so that the gas flows through the whole vent line and purges it. This method is also used by industrial plants for burning waste gas.

The effectiveness of the vent system was demonstrated by an incident during the operation of the 10-in. bubble chamber. The 180-psig rupture disc between the expansion line and the vent system failed, causing a sudden drop of pressure in the bubble chamber (Fig. 3). About 4 liters of the 8 liters in the chamber boiled almost instantly. The gas reached supersonic speed for a part of the time as it traveled, literally screaming, through the vent pipe. When the hydrogen gas reached the flame it burned with a big whoosh, estimated at less than a second, and with a flame estimated as from 10 to 20 ft high. The vent system functioned properly and there was no damage to any equipment. The rupture disc was replaced and the run continued. This event was a good test, and provided proof that these safety features are really needed and that they do protect personnel and equipment.

---

8 J. W. Mark, 10-Inch Liquid-Hydrogen Bubble Chamber Vent System, UCRL Engineering Note 4311-17 M9, Dec. 1955.

HANDLING HYDROGEN SAFELY

When liquid-hydrogen experimental apparatus is used, safety depends upon control of the hydrogen, ventilation, and the ignition sources.

Control of the hydrogen is effected in the equipment by keeping the hydrogen away from air and by venting and burning any boil-off hydrogen gas outside and away from the building. Hydrogen gas bottles and piping should be monitored for leaks, and kept outside if possible.

The transfer of liquid hydrogen from its shipping dewar to the apparatus is perhaps the weakest link in the whole safety chain, since gas escapes freely when dewars are changed. The possibility of formation of an ice plug in a dewar, causing the pressure to build up and the dewar to burst, should be guarded against.

Before liquid hydrogen experimental apparatus is introducted into an existing building, inspection should be made to discover ignition sources such as open flames, electrical sparking, and electrostatic sparking [9, 10] during hydrogen operation. These must be eliminated. If a building can be designed from the beginning for safety with liquid hydrogen, so much the better.

Building Design

Any building in which hydrogen is used should have

(a) a vent system for the apparatus,

(b) good ventilation,

(c) a good grounding system, and

(d) no pockets near the ceiling that can trap hydrogen.

The 72-in. bubble chamber will have its own building (Fig. 10) for assembly, maintenance, and some physics experiments.[11] It is to be designed and built with particular regard for hydrogen hazards.

---

[9] R. Beach, Industrial Fires and Explosions from Electrostatic Origin, Mech. Eng. 75, 307 (1953).

[10] A. Lehmicke, Static and Textile Processes, American Dyestuff Reporter 38, 853 (1949).

[11] Preliminary Proposal for Additions to Bevatron Building and Generator Room and a New Bubble Chamber Staging Area. UCRL - Plant Engineering, May 1956.

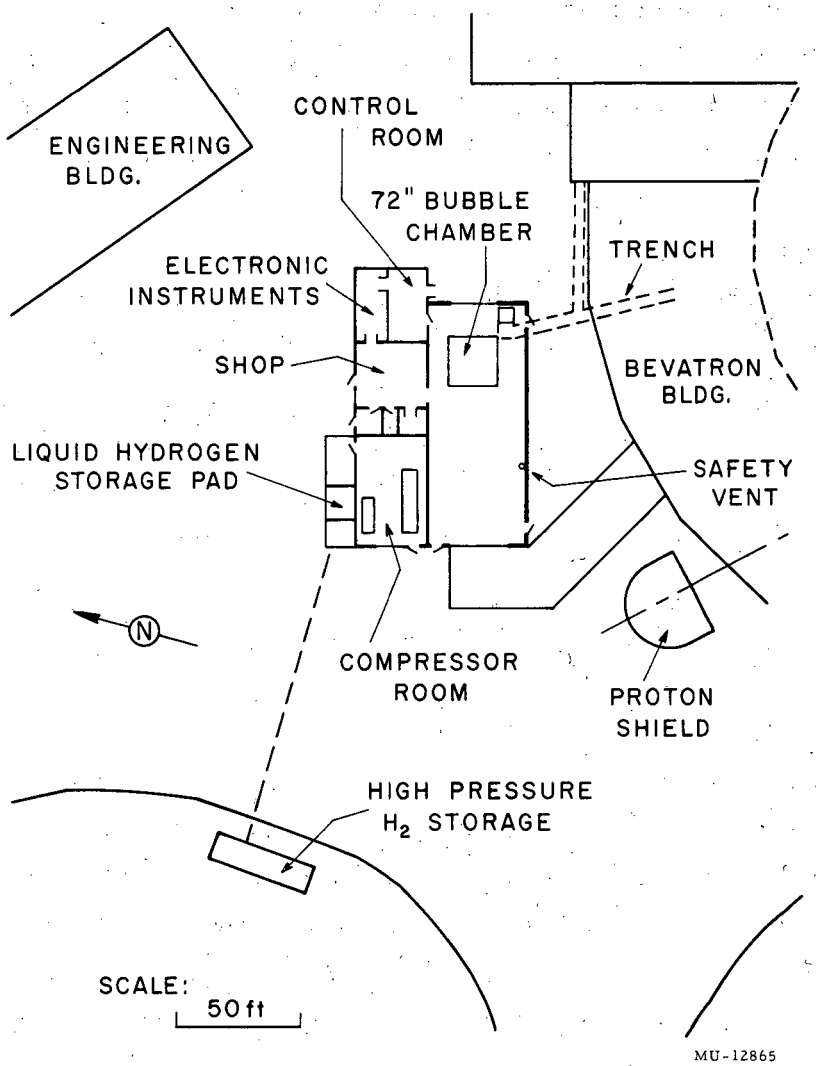

Fig. 10. Bubble chamber site plan.

The main assembly bay is specified to comply with the State of California Safety Orders and the National Electric Code for Hazardous Locations, Class I, Division II. This shall include the building and all permanent equipment installed in this area. However, when Group B or D, Class I, Division I equipment and fittings are available, they shall be used. Hydrogen test equipment and bubble chambers to be used in the building will be designed to comply with Group B, Class I, Division II. Among the specifications are these:

Floor. Conducting concrete.

Walls. Frangible, but such that panels hinge and do not fly from building.

The wall between the high bay and the low bay shall be fireproof reinforced concrete.

Windows. Thin plastic blowout type.

Ventilation. Natural.

The highest part of the building shall have permanent openings distributed the length of the building to permit natural ventilation. Windows, shutters, or other obstructions to ventilation shall not be placed over these openings.

Ventilation. Two-speed forced-draft:

Normal speed - 1 change every 3 min.

Emergency speed - 1 change every min.

Motors may be located outside the building on the roof to obviate explosion-proof construction. They must, however, be a totally enclosed 3-phase squirrel-cage induction type. A hydrogen-detection device shall be used that will automatically switch the ventilation system to high speed when hydrogen is detected. Manual push buttons complying with Group D, Class I, Division I shall be located in the high bay area and in the control room.

Roof. Designed so there are no pockets to trap hydrogen.

Lighting. Explosion-proof, Group B. Class I, Division I.

Heating. Steam.

Grounding Circuit. Ground straps shall be provided at all benches and work areas, along the dado line on walls (to be connected to the project grounding system).

Utility Power. The utility power for the area shall be distributed in blocks so that during hydrogen experiments all unnecessary power can be de-energized at the control room. For example, a block could be located every 20 ft along the wall. In the areas where there may be hydrogen, all equipment using power shall comply with Class I, Division II. The utility power circuits shall comply with Class I, Division II.

Convenience Outlets. A separate circuit of nonhazardous, 3-prong, twist-lock convenience outlets shall be installed every 10 feet. This circuit shall be de-energized by a switch in the control room when hydrogen is used.

Lightning Rods. Shall be provided.

The building will have also a hydrogen compressor room designed to the same safety standards. A shop and control room are also a part of the building and are to be isolated with reinforced concrete walls. (The shop and control room are isolated in nonhazardous areas and therefore do not have any special safety features.) The doors on the building are to be arranged so that during hydrogen experiments the entry of personnel can be controlled. The doors will also be arranged for easy escape.

Safety Survey

A safety survey should include:

1. A description of the system, consisting of
   (a) A complete flow diagram with all components numbered, and
   (b) A chart of mechanical and electrical safety interlocks.
2. A written description of all procedures, including
   (a) Safety check off,[12]
   (b) Start-up,
   (c) Stand-by,
   (d) Operation,
   (e) Emergency, and
   (f) Shut-down.

[12] C. R. Wintersteen and R. C. Mathewson, Safe Handling of Liquid Hydrogen in the Laboratory; UCRL Safety Precautions for the Hydrogen Bubble Chamber, UCRL-3072, July 1955.

3. A list showing what is expected to happen if any part fails, and the immediate action to be taken.
4. Performance of tests to prove the system.
5. Assurance that personnel know the equipment and operating procedures.

A written operating procedure listing operations completely and in proper sequence, and identifying valves, gages, and other components with a number, has been used very successfully on the 10-in. bubble chamber.[13] Writing a detailed operating procedure requires thinking in advance, is a good check on the piping diagram, and will eliminate many operating mistakes, thus increasing safety. It also gives all crew members the same objectives and permits them to anticipate the next step of the operation. There is less confusion because routine operating decisions have been eliminated. The operating instruction will vary in detail according to the size of the job, but whatever is written has to be accurate.

[13] D. Chelton, Operating Instructions, 10-inch Bubble Chamber, UCRL Engineering Note 4311-17 M6, Nov. 1955.

CONCLUSION

It has been emphasized that safety must be considered from the beginning of the job and constantly reviewed to reduce the probability of an accident. Safety codes act as a guide to indicate to all how much safety effort has been made, but they themselves do not guarantee that an accident will not occur. The amount of safety effort required is different for each job, and each case must be separately studied.

The hazards of operating a bubble chamber have been described as the failure of equipment due to overpressure, and the uncontrolled escape of hydrogen gas, which may cause an explosion. To reduce the probability of hydrogen explosions, we must

(a) Use good ventilation,

(b) Keep air and hydrogen gas apart,

(c) Vent and burn hydrogen gas, and

(d) Design equipment to withstand internal explosions.

Explosions may occur from the simple combustion of air and hydrogen or from detonation in the vent system. An overpressure in the vacuum system would occur also if a glass should fail and liquid hydrogen were to immediately lose its super-heat or come in contact with the room-temperature vacuum tank.

The building safety depends upon control of the hydrogen, the ventilation, and ignition sources during operation. A written operating procedure is very important in coordinating the group effort during start-up. During difficult periods this has been the thin thread of continuity.

Information Division
12-7-56 br