UCRL 3524

c.2

Hermanley ✓
Smith HR
Kennedy ✓
Burleigh ✓
Return to F. Porter
File Unclass. Reports File III

UNIVERSITY OF CALIFORNIA

Radiation Laboratory

PHYSICS DIVISION QUARTERLY REPORT

May, June, July 1956

TWO-WEEK LOAN COPY

This is a Library Circulating Copy which may be borrowed for two weeks. For a personal retention copy, call Tech. Info. Division, Ext. 5545

DISCLAIMER

This document was prepared as an account of work sponsored by the United States Government. While this document is believed to contain correct information, neither the United States Government nor any agency thereof, nor the Regents of the University of California, nor any of their employees, makes any warranty, express or implied, or assumes any legal responsibility for the accuracy, completeness, or usefulness of any information, apparatus, product, or process disclosed, or represents that its use would not infringe privately owned rights. Reference herein to any specific commercial product, process, or service by its trade name, trademark, manufacturer, or otherwise, does not necessarily constitute or imply its endorsement, recommendation, or favoring by the United States Government or any agency thereof, or the Regents of the University of California. The views and opinions of authors expressed herein do not necessarily state or reflect those of the United States Government or any agency thereof or the Regents of the University of California.

UCRL-3524
Physics Distribution

UNIVERSITY OF CALIFORNIA

Radiation Laboratory
Berkeley, California

Contract No. W-7405-eng-48

PHYSICS DIVISION QUARTERLY REPORT

May, June, July 1956

August 20, 1956

Some of the results reported in this document may be of a preliminary or incomplete nature. The Radiation Laboratory requests that the document not be quoted without consultation with the author or the Information Division.

Printed for the U. S. Atomic Energy Commission

PHYSICS DIVISION QUARTERLY REPORT

May, June, July 1956

Contents

GENERAL PHYSICS RESEARCH

Physics Research: Alvarez

Liquid Hydrogen Bubble Chambers
4-Inch Chamber Test Runs 4
10-Inch Chamber 4
72-Inch Chamber 5
Analysis of Data Obtained with Bubble Chambers 5
720-Mev π^--p Scattering 6
K^- Interactions in Hydrogen 6

Physics Research: Barkas

Study of Negative K Mesons, Hyperons, and Hyperfragments . 9
Development of the Negative K-Meson Beam 9
Interactions of Antiprotons in Emulsion 10
Measurement of $p\beta c$ in Emulsion by the Surface Angle Method 10

Theoretical Group: Judd 11

Physics Research: Lofgren

Antinucleon Experiments 18
A Coaxial Static Electromagnetic Velocity Spectrometer for High Energy Particles 20
Nuclear Emulsion Physics
Antiprotons 21
K-Meson Scattering 21
K-Meson Yield and Excitation Studies 21

Physics Research: Moyer

Nuclear Absorption of μ Mesons 23
Photon Energy Selector 23
π^- Nuclear Cross Sections at 4.3 Bev/c 23
π^0 Modes of Heavy-Meson and Hyperon Decay 24
Scattering of 100 Mev to 145 Mev Gamma Rays by Protons . . 24
Bismuth Fission Chamber 25
An Experiment in Preparation on the Direct Production of Antineutrons 25

* Preceding Quarterly Reports: UCRL-3410, UCRL-3326, UCRL-3223

Cloud Chamber Studies: Powell

Experiments with the Diffusion Chamber
5.3-Bev p-p Interactions 27
Propane Bubble Chamber: n-p and n-Carbon Interactions. 27
Report Issued 27

Equipment and Techniques
30-Inch Propane Bubble Chamber 28
35-Atmosphere Hydrogen Diffusion Chamber. 28

Physics Research: Richman

K Mesons 29
Negative Protons 29
Automatic Scanner 29

Physics Research: Segrè

Antiproton Work 30
Exposure of Photographic Emulsions to a 480-Mev/c Separated Positive K-Meson Beam 31
Study of the Antiproton Annihilation Process 31

Arc Research: VanAtta

High-Vacuum and Ultra-Low-Temperature Refrigeration . . . 32

ACCELERATOR OPERATION AND DEVELOPMENT

Bevatron. 33
184-Inch Cyclotron
Modification 33
Linear Accelerator
Operation 34
60-Inch Cyclotron
Development: Thermistors at Work on the 60-Inch Cyclotron . 35
Operation 41
Synchrotron
Research Program 44
Operation 44

PHYSICS DIVISION QUARTERLY REPORT

May, June, July 1956

Radiation Laboratory
University of California
Berkeley, California

August 20, 1956

GENERAL PHYSICS RESEARCH

PHYSICS RESEARCH

Luis W. Alvarez in charge

LIQUID-HYDROGEN BUBBLE CHAMBERS

Luis W. Alvarez, J. Donald Gow, and group

4-Inch Chamber Test Runs

The 4-inch chamber was used for testing bubble-chamber operation with deuterium. Successful operation was obtained with a deuterium temperature of 33° to 34° K, vapor pressure of 115 psia, and expanded pressure of 50 psia. No trouble with boiling due to tritium contamination was observed. The 10-inch chamber can therefore be operated with deuterium without changes, and the present 72-inch design is more than adequate for such operation.

10-Inch Chamber

The 10-inch chamber was utilized for a series of runs in the new northwest target area of the Bevatron. The experiment involved the stopping and capture of K^- mesons in hydrogen. Between two of these runs, a new expansion line and expansion valve were installed on the chamber. The new line is designed to give lower minimum pressure during the expanded phase and is flared into the chamber to reduce the turbulence previously encountered in the vicinity of the chamber expansion port. Because the new expansion valve operates on a faster recompression cycle than the old valve, temperature gradients in the chamber have been further reduced. The old cyclinder and piston recompression engine was replaced with a small compressor, which serves to transfer gas from the expansion bottle to the recompression bottle between expansions. These changes have resulted in a further reduction of the refrigeration requirements for the chamber. It is now possible to operate on a 10-per-minute expansion cycle with only 3 liters per hour of hydrogen boiloff (including static heat leaks).

Since installation of the chamber in the K^- beam, approximately 30,000 pictures have been obtained.

Status of 72-Inch Chamber

The design of the 72-inch chamber is proceeding satisfactorily. Both the vacuum tank and the copper for the magnet coils have been received from the fabricator. The compressor equipment is on order and the refrigerator is being designed. The internal liquid-nitrogen thermal shields are designed and ready for bid. A glass window for test purposes has been received and the final window ordered. No significant changes in the design of this instrument are contemplated.

ANALYSIS OF DATA OBTAINED WITH BUBBLE CHAMBERS

Hugh Bradner

The events on the K^--capture experiment in the hydrogen bubble chamber have been analyzed largely by graphical and trigonometric methods. Track coordinates of representative events were punched onto IBM cards by the precision-digitized reader and these cards have been run through the IBM-650 machine. The program for transforming the punched card information into spatial-coordinate and momentum data does not work on all tracks and consequently is being revised.

A photoelectric device to aid rapid setting of track coordinates has been made and tested. The electronic circuit for using this device to automatically center and punch out coordinates is being constructed.

An improved model of the machine for scanning film has been completed and a simple stereoscopic viewer for rapid scanning of film has been made.

Various proposed methods for retrodirective illumination of the 72-inch bubble chamber have been tested in the 4-inch chamber. The special Scotchlite, manufactured by Minnesota Mining and Manufacturing Co., appears reasonably satisfactory for light-field illumination. A special arrangement of 90° double-reflecting prisms appears satisfactory for dark-field illumination.

Tests of different films under various development conditions are being continued in search for a film of adequate speed, high resolution, and high contrast.

Tests have been made on various commercial lenses for the 72-inch bubble-chamber cameras. No lenses have been found that give adequately sharp images with the wide acceptance angle that is required of cameras centered 6 feet above the large chamber.

Theoretical study is continuing on the limiting factors to be expected in bubble-chamber analysis and on the accuracies in manufacture and measurement that will be required to achieve the accuracy ultimately set by multiple Coulomb scattering. Reports summarizing the present status of this work are in preparation.

720-Mev π^--p SCATTERING

Myron L. Good, Hugh Bradner, Frank S. Crawford,
and M. Lynn Stevenson

Interactions of negative π mesons from the Bevatron have been observed in the 4-inch liquid-hydrogen bubble chamber. Of 55 events analyzed, 34 are elastic scatters. Seven others are nearly coplanar but do not have angles appropriate to elastic scatter.

The following angular distributions of elastic π-meson scatters in equal increments of $\cos\theta$ were found:

Cos θ_π (c.m.)	No. Events
1.0 to 0.6*	18
0.6 to 0.2	11
0.2 to -0.2	2
-0.2 to -0.6	2
-0.6 to -1.0	3

* Corrected for scanning cutoff at approximately 15°.

The strong forward peak is consistent with diffraction scattering of cross section comparable with inelastic cross section.

Twenty-one inelastic events consisting of $\pi^- + \pi^+ + n$ and $\pi^- + \pi^0 + p$ were found. One case of $3\pi^\pm + p$ was seen.

K^- INTERACTIONS IN HYDROGEN

Luis Alvarez, Hugh Bradner, Paul Falk, Don Gow, Arthur H. Rosenfeld,
Frank Solmitz and Robert Tripp

About 57 K^- mesons that we have observed in the 10-inch hydrogen bubble chamber have been analyzed. The events were approximately reconstructed in space by use of the two-stereo view; track curvatures were measured by use of railroad curves. Reanalysis of the events will begin shortly with track coordinates punched into IBM cards. An IBM 650 machine will then yield a least-squares determination of the track curvature and the direction of the track at all vertices. This determination should considerably improve the precision of our measurements. Turbulence has made precise momentum analysis unreliable but a new expansion line should ameliorate conditions in coming runs.

The events are distributed in the following manner:

$\Sigma^- \rightarrow N + \pi^-$	18
$\Sigma^+ \rightarrow N + \pi^+$	7
$\Sigma^+ \rightarrow P + \pi^-$	5
$\Sigma^\pm \rightarrow$ (we can't distinguish)	3
Λ or $\Sigma^0 \rightarrow P + \pi^-$	9
Λ or $\Sigma^0 \rightarrow N + \pi^0$	5 (+4 or -2)(a)
Decays in flight	8
Uncertain	2
Total	57

(a) The uncertainty in the number of lambda decays via $N + \pi^0$ arises from the fact that we cannot positively identify a stopping K^- (if the K track is short) without observing, in addition, some phenomenon characteristic of a K^-. Most of the time the chamber sensitivity varied greatly from the top to the bottom and therefore bubble counting was unreliable. Recoil protons and charge-exchange pion scatterings occasionally look like stopping K^-.

The Λ's that we see can be produced in any of the following three ways:

(a) $K^- + P \rightarrow \Lambda + \pi^0$,

(b) $K^- + P \rightarrow \Sigma^0 + \pi^0$, $\Sigma^0 \rightarrow \gamma + \Lambda$,

(c) $K^- + P \rightarrow \Lambda^0 + \pi^0 + \pi^0$.

The spectrum for these three processes is indicated in Fig. 1.

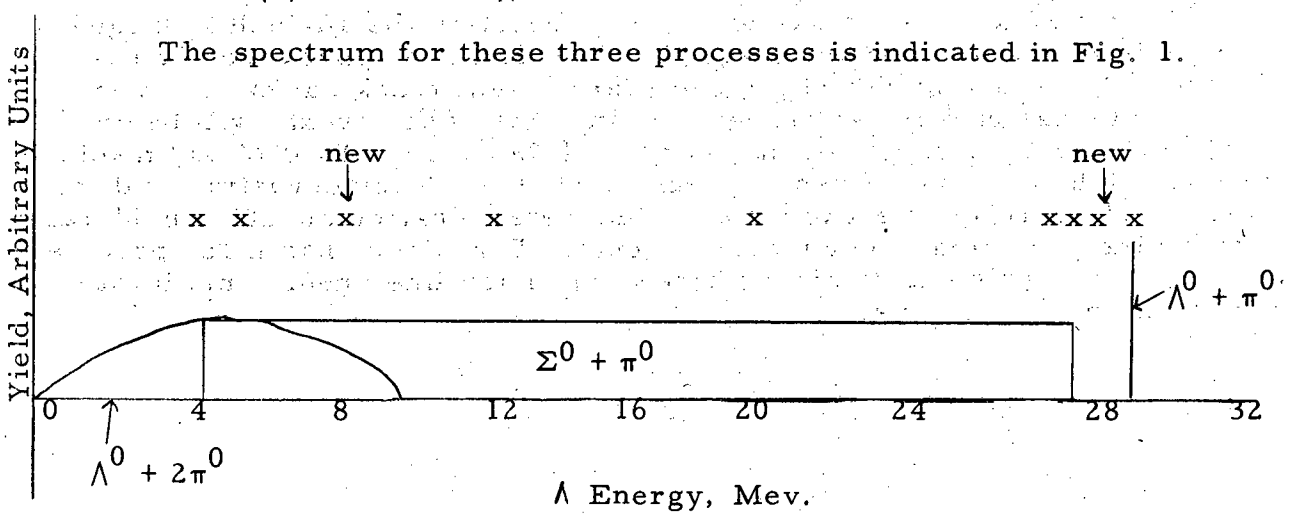

Fig. 1.

The x's are at the energies of the Λ's that we have found so far, namely, 3.7, 5, 12.5, 21, 27.5, and 29 Mev. The uncertainty in each energy is about ± 3 Mev. Hence, there is good evidence for the existence of the Σ^0. For that matter, all energies may be Σ^0. However, we would like to (a) get a few more unambiguous events, and (b) analyze these events with more precision before asserting the existence of the Σ^0.

In addition to the three reactions listed above, there is also the possible reaction

$$\text{(d)}\quad K^- + P \rightarrow \quad + \pi^+ + \pi^-,$$

for which the upper energy limit is even lower (no such events were observed). It should be noticed that the area under the three-body spectra (as calculated by phase space alone) is small compared with the area under the spectrum for Λ's from Σ^0's.

We obtain the following lifetimes for the sigmas and lambdas:

Σ^-	2.1×10^{-10} sec.	(on 14 events)
Σ^+	0.89×10^{-10} sec.	(on 8 events)
Λ	3.1×10^{-10} sec.	(on 7 events) .

The number of K^- decaying in flight is consistent with a lifetime equal to that of the K^+. Momentum measurements are not precise enough at present to distinguish between $K_{\pi 2}$ and $K_{\mu 2}$ decay modes.

The angular distribution of 27 sigma decays yields the table below. The center-of-mass angle is that of the pion with respect to the direction of motion of the sigma.

		Center-of-Mass Angle						
		$0^\circ - 60^\circ$	$60^\circ - 90^\circ$	$90^\circ - 120^\circ$	$120^\circ - 180^\circ$	For-ward	Back-ward	Total
Σ^- [a]		5	4	2	4	9	6	15
Σ^+	N	3	2	1	1	5	2	7
Σ^+	P	1	3	0	1	4	1	5

[a] Three Σ^- were not included. One was produced by a K^- interaction in flight. A second came to rest and charge-exchanged with a proton; another made a charge exchange in flight.

These results may indicate a fore-aft asymmetry. Folded through 90°, the distribution is consistent with isotropy.

No violation of the Gell-Mann–Nishijima scheme has been observed.

PHYSICS RESEARCH

Walter H. Barkas in charge

STUDY OF NEGATIVE K MESONS, HYPERONS, AND HYPERFRAGMENTS

Walter H. Barkas, Walter Dudziak, Peter Giles, Harry H. Heckman, Fred Inman, Conrad Mason, Norris Nickols, and Frances M. Smith

A study of "elementary" particles with a strangeness quantum number of minus one has been started. Survey work on the K^--meson beam mentioned below has yielded some usable emulsion stacks containing large numbers of negative K mesons. In interaction with matter they yield hyperons and hyperfragments.

In the systematic area scanning of two emulsion stacks, we have found fourteen hyperfragments. These hyperfragments are now being analyzed with the aid of a nuclear track photometer described in detail in a previous progress report. In the present stacks, the pion/K^- ratio lies between 5000:1 and 7000:1. In order to obtain more K^- interactions, we are preparing for an emulsion exposure in which a much more favorable ratio of K mesons to pi mesons should be obtained.

DEVELOPMENT OF THE NEGATIVE K-MESON BEAM

Walter H. Barkas, Walter Dudziak, Peter Giles, Harry H. Heckman Fred Inman, and Norris Nickols

Investigation of the problem of separating K from π mesons by large-angle magnetic deflection is continuing. To simplify the setup problem, we have changed the orientation of the magnet. As the new magnet arrangement reduced the return-flux path of the magnet by nine tons, a new survey of the magnetic field had to be made. The new field measurements show small variations from those previously obtained. These variations do not alter significantly the focusing properties of the 180°-deflection spectrometer that were reported in the previous quarterly report.

Two emulsion stacks have been exposed in the K beam at the exit of the quadruple focusing magnet. One of these was exposed at the position of the entrance window of the 180° spectrometer. The purpose of these exposures was to study the composition of the beam that will be incident on the energy degrader located at the entrance window. Some of these plates have been scanned and additional scanning is now in progress.

We have constructed six plastic scintillator counters, four of which will be used to analyze the spatial and momentum distribution of K mesons at the exit of the 180° spectrometer. Because of the large magnetic fields near the counters, we have developed a magnetic shield that can effectively shield a 6655 end-window photomultiplier from a 1-kgauss magnetic field. Plateaus are now being determined for each of the counters by using cosmic rays.

INTERACTIONS OF ANTIPROTONS IN EMULSION

Harry H. Heckman, Frances M. Smith, and Walter H. Barkas

A successful new irradiation of a 6-by-9-by-4-inch emulsion stack in the 700 Mev/c antiproton beam has been performed. Through July 31 fifteen antiprotons that led to annihilations were found entering the stack. This sample of events includes eight annihilations at rest and seven in flight. The total path length observed is 161 cm. No large-angle scattering events ($> 10^{\circ}$) have been detected. The mean flux of negative pions entering the stack is about 1.5×10^5 π/cm^2.

MEASUREMENT OF $p\beta c$ IN EMULSION BY THE SURFACE-ANGLE METHOD

Harry H. Heckman, Frances M. Smith, and Walter H. Barkas

A technique to measure the $p\beta$ of steeply diving tracks has been developed to augment the information obtained in the analysis of antiproton annihilations. In this method the projected entrance angles are measured at the surface of each pellicle (where the effects of distortion are expected to be small). If $\overline{\Delta\phi}$ is the mean deflection in the projected angle per pellicle, then the mean scattering angle per 100μ cell, $\overline{a}$, is given by

$$\overline{a} = \overline{\Delta\phi} \quad \frac{\cos\delta \sin^{1/2}\delta}{(T/100)^{1/2}} \quad ,$$

where δ is the dip angle and T is the emulsion thickness in microns.

Although the measurements are rather difficult and limited in statistics, we feel that this method does give satisfactory results. As a check we have measured the $p\beta$ of the secondaries from the $K_{\pi 2}$, $K_{\mu 2}$, and τ mesons having dip angles from 8° to 53°. The $p\beta$ of the secondaries from the $K_{\pi 2}$ and $K_{\mu 2}$ are 165 and 214 Mev/c, respectively, and the $p\beta$ of the pions from the τ decay are known from their ranges. The results are as follows:

Dip Angle (degrees)	Measured $p\beta$ (Mev/c)	Known $p\beta$ (Mev/c)
8	198 ± 35	214
53.3	166 ± 22	165
33	274 ± 55	214
45.7	68 ± 10	76.2 (from range)

The evaluation of noise was performed by studying the dependence of $\overline{\Delta\phi}$ on integral multiples of a standard cell length. All estimates of the noise are consistent with a mean error in individual $\Delta\phi$ measurements of 0.3°.

THEORETICAL GROUP

David L. Judd in charge

Recent lifetime and branching-ratio data have been reviewed to see whether or not equal production of opposite parity K mesons can be reconciled with the explanation of the nearly equal lifetimes given in Physical Review 102, 1420. Only if all the modes τ, K_β, $K_{\mu 3}$ originate solely from the 0^- parent and 0^- is appreciably shorter-lived than 0^+ can the observed decay mode abundances be conceivably reconciled with equal production of 0^+ and 0^-. This possibility will be definitely realized or rejected when narrower limits on the lifetime differences are established or when better experimental agreement is reached on the abundance of τ and K_β at short distances and of $K_{\mu 3}$ at further distances. (S. Bludman)

The possibility that all particles are parity doublets is being investigated. If no interactions couple the observed particles with their parity conjugates, then the theory may be, over-all, parity symmetrical, and yet the particles with which we are in interaction may by themselves show a left-handed, right-handed asymmetry. If the weak interactions violate this parity degeneracy, the problem is to explain why during the lifetime of the universe no detectable amounts of nucleons of abnormal parity have been produced. (S. Bludman and M. A. Ruderman)

Certain aspects of the decay of hyperons have been studied. Clarification of the Lee-Yang result in connection with the asymmetry of the decay of a dual-parity Σ has resulted. Work is under way to evaluate the effect of the final-state pion-nucleon interaction in the hyperon decay products. Insight into the spin, parity, and lifetimes of the hyperons can thereby be gained. In general, the final state of the Λ and Σ contain isotopic spin states of 1/2 and 3/2. The question of the relative phases of the matrix elements for decay into these states is under consideration. The use of the general properties of the S matrix, which has proved useful in connection with a similar problem in pion photoproduction, is questionable here, because for decaying states the S matrix is singular. (W. Holladay)

An attempt is being made to analyze the available data on the scattering of K^+ mesons from heavy nuclei, by use of a simple optical model of the nucleus. At present, calculations are being made at 60 and 180 Mev, assuming a complex square well nuclear potential and point charge. Two approaches have been used in calculating the nuclear well potential: (a) by curve-fitting methods to the experimental curve, and (b) through the Klein-Gordon equations and Schwinger's curve for the K nucleon differential cross section, giving a repulsive potential of V equal to 17 + i 3.46 Mev at 180 Mev. To be considered next are a more realistic charge distribution and calculations based on assumptions as to the nucleon momentum distribution. (O. Eldridge and Z. Guiragossian)

Preliminary results seem to indicate that on the basis of certain Yukawa-type interactions between K mesons, hyperons, and nucleons, lowest-order perturbation theory can predict a forward peaking of the θ^0 in associated production and of the K^+ in the scattering of K^+'s on protons. Other couplings definitely exclude the possibilities of forward peaking. (R. Spitzer)

A survey of the decays and nuclear reactions of the K particles and hyperons is in progress. This is being done by assuming the simplest couplings between these particles and then applying standard perturbation theory to them. (J. V. Lepore)

An interaction between pions and K mesons has been suggested in an attempt to interpret the strong forward and backward peaking of K mesons produced in association with hyperons in π-N and N-N collisions, as well as the peaking of K mesons toward the forward direction in K-N scattering. Some consequences of such an interaction are being investigated for the purpose of comparison with the experiments by Osher and Moyer, in which they observed the angular distribution of neutral unstable particles produced at the Bevatron. (Saul Barshay)

The momentum distribution of pions produced in p-Be and p-p collisions at the cosmotron have been observed to follow closely the distribution expected on the basis of a strong interaction in the 3/2, 3/2 state at the energy characteristic of the resonance in the π + p cross section. A model for the excitation of each nucleon into the isobaric state with subsequent decay by pion emission is being investigated. (S. Barshay)

A review article on statistical models for high-energy nuclear events is being prepared. (J. Lepore and M. Neuman)

A study of the influence of the K-π interaction postulated by Schwinger on the existence of K fragments has been undertaken. The lowest-order perturbation theory K-nucleon potential has been obtained and a variational principle to determine the minimum Kπ coupling consistent with binding has been set up. The potential has a $1/r^2$ singularity, and although for the coupling strength postulated by Schwinger the energy is bounded, a hard core at short distances is physically more reasonable. The potential has been modified accordingly. The integrals involved in the variational principle even with the simplest "reasonable" trial functions are quite complicated, and they are now being evaluated. (S. Gasiorowicz)

A survey has been made of a model wherein all V particles are regarded as complexes made from two basic units, the Λ and the N (nucleon). Fermion-fermion and fermion-antifermion interaction energies are roughly computed from experimental data; they are consistent with the view that the "hard core" of nucleon-nucleon interactions is reversed in sign for the nucleon-antinucleon case. Under any assumptions of symmetry between the N and Ξ (cascade particle), the model shows clearly that no further metastable V particles should be found, in accord with present experience. The model also provides a convenient vehicle for investigating the further consequences

of the Yang-Lee parity doublet scheme for Λ particles and K particles; the scheme proves upon examination to entail a number of complications. (D. C. Peaslee)

Considerations have been made on the dimensionality n of charge space. In principle, n is unlimited; in practice, experimental evidence becomes more and more tenuous with increasing n. It seems almost certain that $n > 2$, and there is some possibility that $n \geq 4$. Evidence that n is as large as 5 is rather tenuous, and that for $n = 6$ even more so; there is no evidence on $n > 6$. (D. C. Peaslee)

A study of parity-mixture schemes for K particles indicates that they are very limited in character and must be essentially equivalent to that of Yang-Lee, if the decay processes are to conserve parity. The same analysis can be applied to charge parity for the θ_1, θ_2 case and suggests that these particles cannot have different lifetimes. A long-lived neutral K not decaying into 2π should then be a τ^0. (D. C. Peaslee)

The approach applied successfully by Chew to the problem of π-nucleon scattering has been used to treat K-particle nucleon scattering. Two models have been investigated, one in which the K particles interact directly with the nucleon, and the second where the π-meson field transmits the force. The first model does not show the isotopic spin dependence indicated by the sparse experimental data. The second model shows correct general features, but the data are too limited for a detailed comparison. The possibility of an exact solution to the Chew-Low fixed-source scattering problem by means of the functional methods of Edwards and Peierls is being studied. (H. Stapp)

The problem of the fraction of π^- and K^- mesons that stop in hydrogen atoms in nuclear emulsion was investigated. The approach was to follow the history of the meson from the time when the meson is moving slowly through the emulsion to the time of its absorption by nuclear interaction. The fraction of mesons initially undergoing Coulomb capture on hydrogen has been estimated and formulae have been derived which give the partial Coulomb-capture cross sections. These cross sections are being evaluated numerically on the IBM 704 computer at the Livermore site. The rates of the other processes that occur after Coulomb capture have been estimated. It is hoped that the results will be in accord with the experimental observation that a significantly larger fraction of K^- particles is captured on hydrogen then π^-, so that it will not be necessary to postulate an extraordinary interaction for either the π^- or K^- mesons. (George A. Baker, Jr.)

An attempt is being made to fit the known elementary particles into a framework of a 16-dimensional spin space corresponding in the brouwer-Weyl terminology to $\nu = 4$, which is a natural generalization of the four-dimensional Dirac spin space ($\nu = 2$). (Maurice Neuman)

The data on photopion production from protons, together with dispersion relations for photon-proton scattering, are being used to predict the general nature of the differential cross section for elastic scattering

from protons of gamma rays in the energy range 100 to 250 Mev. A similar analysis using the impulse approximation is being made for gamma-deuteron scattering. (R. Capps)

The proton-antiproton exchange potential, with an exchange of many mesons, has been constructed in the form of a multiple integral. Its evaluation has so far proved resistant to standard procedures, but an approximate calculation suggests that such a potential could be long-range, strong, and attractive. (S. Gasiorowicz)

The scattering of bosons by "nucleons" in the Lee model (Phys. Rev. 95, 1329, 1954) for the case in which the "V" particle is unstable, and a resonance in the scattering cross section at the V mass have been found, in agreement with unpublished calculations by Glaser and Källén. (S. Gasiorowicz)

A study is being made of the neutron-momentum density in carbon using recent deuteron-pickup experimental results. A term describing the nuclear scattering of the incident proton in the process is being considered to supplement the original Chew-Goldberger theory. It appears that the more complete theory lessens the need for large high-momentum components in the nucleus to explain the data, and the momentum distribution approaches a Gaussian shape. (K. Greider and W. Heckrotte)

A number of calculations of magnetic moments and total binding energies have been made for spheroidally deformed nuclei, on the basis of wave functions calculated previously. These magnetic moments are in moderate agreement with experimental values. Some consideration has also been given to an alternate mode of formulation of the shell model. (Marvin Rich)

The effect of an extended nuclear-charge distribution (as indicated by the Stanford experiments) upon the charge-independence hypothesis, as manifested by the low-energy ^1S scattering of nucleons by nucleons, is being studied. Present indications are that the charge spread introduces a correction of about 10% in the zero-energy scattering length. The magnetic corrections are also being calculated and will probably give a comparable correction in the same direction. (W. Heckrotte, R. Raphael, and A. Garren)

It has been found that one of the 300-Mev p-p ^1S and ^1D phaseshift solutions of H. Stapp may be fitted by one of the singular potentials that Shapiro and Preston (Can. Physics 34, 451 (1956)) find consistent with low-energy n-p and p-p scattering and charge independence, if their potential is modified by increasing the hard-core radius. (W. Heckrotte and A. Garren)

The effects of injection conditions on the aperture requirements of alternating-gradient synchrotrons have been studied in some detail. The results show that in principle the required aperture is independent of the location of the injection point, although practical considerations will probably affect its choice. (D. H. Holland)

A study of methods for separating the constituents of momentum-analyzed beams has been started, with particular attention being given to a coaxial device suggested by J. J. Murray of the Bevatron group. (D. H. Holland, L. Smith, and A. Garren)

Work is beginning on a survey of possibilities for modification of the Bevatron injection system. (John Hiskes)

The possibility of coherent acceleration of particle bunches is being examined. (Maurice Neuman)

The antiproton-hydrogen total cross section has been measured by Piccioni et al. as ≈ 100 mb at 500 Mev. If this large cross section is elastic there is no difficulty in principle, for meson exchange might, for all we know, produce a much stronger $\bar{N}N$ than NN potential. But if this cross section should be largely due to annihilation, then either the annihilation force has a range considerably longer than M^{-1} (S. Gasiorowicz is considering a possible basis for such a force) or else the $\bar{N}N$ potential induces annihilation through radiative capture, i.e., the $\bar{N}$ and N fall into a bound state while emitting a meson. This process, meson production with bound final-nucleon state, would be observed as an annihilation with the peculiarity that among the annihilation products would be a π meson with an energy approximately equal to the initial kinetic plus final binding energy of the nucleons. An attempt has been made to estimate the cross section for this process, but the effect of the $\bar{N}N$ interaction in the initial state, and of the $\pi\,\bar{N}$ interactions in the final state has not as yet been accounted for. Both these effects could be large. It might be noted that radiative capture of $\bar{p}p$ into the ${}_1^1S$ state is especially slow because, except for retardation, the amplitudes for meson emission by the $\bar{p}$ and the p are equal but opposite and the potential due to one meson exchange is by far the deepest in this ${}_1^1S$ state. (Charles Goebel)

During the past quarter, mathematicians in the Theoretical Group have been engaged as follows:

An IBM Type-650 magnetic-drum computing machine has been rented, a library of subroutines has been established for it, and computations are now being done on a two-shift basis.

The first program for processing data from the bubble chamber was completed by Robert Johnston. A new program is now being developed to handle some special cases beyond the scope of the first program. The method of reducing the data is similar to that described in an earlier report, the only differences being the determination of the elevation angle of the tracks by a least-squares fitting and the additional feature of handling 35 coordinates per track rather than 20, as was previously done. The form of the output data has also been changed to be more convenient as input for a momentum-balance program yet to be developed. (Charles Stableford for the Bubble Chamber Group)

Work has continued on the revised Beverly Hill Willis report. At the suggestion of Dr. Luis Alvarez, the revised report will appear in three volumes rather than one. The first volume will contain only information concerning the kinematics of high-energy particles. Volume 2 will consist of range-energy graphs for all the particles, and Volume 3 will contain range-momentum graphs plus the addition of a table of densities and useful physical constants. It is hoped that such an arrangement will facilitate future revisions. (Charles Stableford for the Information Division at the suggestion of Dr. Luis Alvarez)

A program has been prepared which computes the orbit of a charged particle moving in the magnetic field of the Bevatron. Accuracy of these calculations will be of the order of 0.1%. Previous calculations, which employed analogue equipment, were not able to take advantage of the accuracy of the measurements of the Bevatron's magnetic field. (V. O. Brady for William Fowler of the Cloud Chamber Group)

A program to calculate partial Coulomb-capture cross sections for π^- mesons incident on monatomic hydrogen is being written for the IBM Type 704. (J. D. Monk for George Baker of the Theoretical Group)

A general three-point interpolation program has been written for the IBM Type 650. (J. D. Monk for the Magnetic Measurement Group)

A Monte Carlo calculation is in progress to determine how much of the background in an experiment investigating the possible reaction

$$K^+ \rightarrow \pi^+ + \pi^0 + \gamma$$

is produced by extraneous γ rays coming from conversion of π^0 and γ's in the experimental equipment and subsequent annihilation of the pairs. (H. Hanerfeld for Myron Good of the Bubble Chamber Group)

Work was started on a Monte Carlo investigation of scattering of protons by heavy nuclei using the impulse approximation in the manner of Chew and Goldberger. (K. Curtis for Lester Winsberg of Nuclear Chemistry)

Further cases of the problem of analysis of complex line spectra in heavy nuclei were done. (K. Curtis for John Rasmussen of Nuclear Chemistry)

A program to compute the magnetic field in the 184-inch cyclotron from raw field measurements has been completed. It is being used to prepare input for a previously prepared UNIVAC program that estimates necessary shim changes in the cyclotron. (H. Hanerfeld, J. Young, and J. Baker for the 184-inch Cyclotron Group)

A Fourier analysis of the angular variation of the cyclotron magnetic field was performed to find the contribution to field irregularities due to bolt holes. This was accomplished by means of a numerical integration of the Fourier coefficient integrals using measured values of the cyclotron field at 360 points at constant radius. In addition, some of the Fourier

terms with large coefficients were summed for a range of values of the independent variable to give a measure of their collective contribution to the field. (Eldon Hansen for Warren Stubbins of the 184-inch Cyclotron Group)

A numerical solution was made for three different expressions for nuclear cross sections. This solution involved an iterative variation of the parameters involved to give the measured cross sections. The computations were made for a range of values of parameters so as to give a complete picture of their possible relative values within given limits. (Eldon Hansen for N. F. Wikner of Burton Moyer's Group)

Work is under way with John Rasmussen of the Nuclear Chemistry Group on a numerical study of alpha emission from spheroidal nuclei. This study involves a numerical integration of four simultaneous differential equations for the first four angular-momentum states. Such an integration determines the distribution of the wave function at the nuclear surface. (Eldon Hansen)

The numerical calculation of an alternating-gradient focusing problem over 20 stages of focusing is in progress. Under consideration are space charge effects as well as effects from magnetic and electrostatic forces. (Eldon Hansen for John Hiskes of the Theoretical Group)

PHYSICS RESEARCH

Edward J. Lofgren in Charge

ANTINUCLEON EXPERIMENTS

Bruce Cork, Glen R. Lambertson, Oreste Piccioni, and William A. Wenzel

The selection system described previously for negative particles from an internal Bevatron target has been placed in operation, and experiments on the antinucleons are in progress.

Measurements have been made of the total hydrogen cross section for antiprotons at two energies. These measurements are being extended to lower energies, and the search for antineutrons is in progress.

The group of magnets needed for the experiment, the counting equipment, and the large hydrogen target, 5 ft long and 8 in. in diameter, were all in operation during this quarterly period. Four of the focusing quadrupoles were slightly modified in the direction of decreasing their focal length so that the ensemble of magnetic lenses could channel particles of 1.4 Bev/c momentum. The magnets are disposed as shown in Fig. 1, where the positions and sizes of counters can also be seen. With the introduction of the "field lenses," L_2 and L_4,[1] the optical system accepts more antiprotons and particularly allows particles within as large a momentum range Δp as desired. In fact, Δp is determined solely by the angles of deflection $\overline{A}$ and $\overline{B}$. For angles $\overline{A} = \overline{B}$ equal to 6°, $\Delta p/p$ is $\pm 5\%$. The counter system for the total-cross-section experiment consists of six 4- by-4-in. counters (A through F) defining the beam and a large counter L which detects antiprotons not removed by the hydrogen target (see Fig. 1).

The apparatus has operated first in a beam of 1.15 Bev/c (negative particles), and second in a beam of 1.4 Bev/c. The discrimination between pions and antiprotons, based on the difference in time of flight, is obtained electronically by two independent coincidence circuits of 2×10^{-9} sec resolving time (half width at 10% height).

Oscilloscope pictures of the pulses of Counters A, F, and L are also taken to confirm a $\overline{P}$ event and as a method of obtaining maximum efficiency for Counter L.

Direct coincidence counting gives the same information with less than 5% background. The electronic system is capable of counting antiprotons directly with a background of less than 5%. Counting rates as high as 10 per minute have been observed at 1.4 Bev/c. The normal rate is about one-half this maximum.

Preliminary analysis of obtained data shows that the total cross section of hydrogen for antiprotons is 100 mb, both at 1.15 Bev/c momentum (kinetic energy equal to 0.546 Bev) and 1.4 Bev/c (kinetic energy equal to 0.766 Bev).

---

[1] Physics Division Quarterly, UCRL-3326, Feb. 1956.

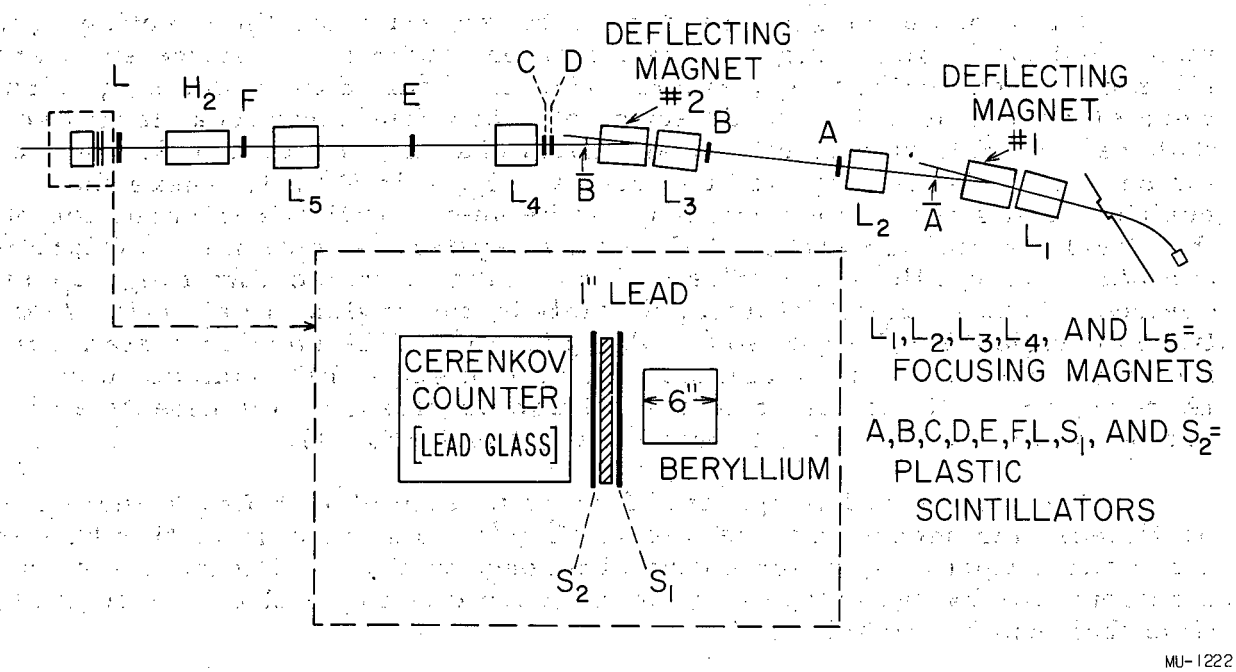

Fig. 1. Layout of the experiment.

A search for antineutrons produced from antiprotons by charge exchange is also in progress. Use is made of a lead glass Cerenkov counter at the very end of the telescope, as in the experiments of Brabant, Cork, Horwitz, Moyer, Murray, Wallace, and Wenzel.[2,3] A thick converter placed after the last counter, L, could cause some of the antiprotons to change into antineutrons. With an appreciable probability, the antineutrons would cross the two subsequent scintillation counters S_1 and S_2 without producing a pulse in them and would eventually interact in the glass counter, with a large release of energy. An oscilloscope picture is taken of the pulses in S_1, S_2, and the glass counter.

As yet there is no conclusion to report.

A COAXIAL STATIC ELECTROMAGNETIC VELOCITY SPECTROMETER FOR HIGH-ENERGY PARTICLES

Joseph J. Murray

Work has started on the construction of a coaxial static electromagnetic velocity spectrometer[4] suitable for separation of K^- mesons from π^- mesons at $\lesssim$ 435 Mev/c and under different operating conditions for separation of antiprotons from π^- mesons at $\lesssim$ 800 Mev/c. It is being built for a nominal 4-inch beam diameter. The spectrometer itself will be 14 ft long, and the length of typical systems (source to experiment) in which it will be employed for separation of K^- mesons will be 35 to 40 ft. At 435 Mev/c the ratio of K^- to π^- plus other contaminating particles at the end of a typical system is expected to be ~1 to 40, on the basis of a K^-/π^- production ratio of 1 to 400 at 0° laboratory angle and assuming a mean life of 10^{-8} sec.

---

[2] Brabant, Cork, Horwitz, Moyer, Murray, Wallace, and Wenzel, "Terminal Observations on 'Antiprotons'," Phys. Rev. 101, 498-501 (1956).

[3] Brabant, Cork, Horwitz, Moyer, Murray, Wallace, and Wenzel, "Interactions of Antiprotons in Lead Glass," Phys. Rev. 102, 1622-1626 (1956).

[4] Joseph J. Murray, A Coaxial Static Electromagnetic Velocity Spectrometer for High-Energy Particles, UCRL-3492, July 1956.

NUCLEAR EMULSION PHYSICS

Warren W. Chupp and Sulamith Goldhaber

Antiprotons

Scanning of emulsion and analysis of events is proceeding. Subsequent to the last quarter, an additional exposure has been made in the 700-Mev/c antiproton beam; the film is being scanned.

The total number of antiproton events found by this group to date is eight, of which six have been completely analyzed and two partially analyzed.

The events that have been analyzed are included in a paper to be submitted to the Physical Review in collaboration with the other nuclear emulsion groups at this laboratory.

K-Meson Scattering

The purpose of these studies is to examine in more detail the scattering of both positive and negative mesons and, specifically, to extend previous work[5] to higher energies.

At present K^- mesons of 430 Mev/c and K^+ mesons of 480 Mev/c are being studied. The K^+-meson exposure was carried out in a beam in which pions of the same momentum were removed by the interposition of a beryllium absorber and additional magnetic deflection. The exposure and analysis are being carried out in collaboration with Joseph E. Lannutti and Gerson Goldhaber. This exposure appears to have been quite successful and promises to yield results rapidly.

K-Meson Yield and Excitation Studies

In the course of our work a large number of data on the production of positive and negative K mesons has become available to us. Since these experimental yields of K mesons at various momenta and energies might be useful to other experimenters we have summarized the data in Table I.

[5] Lannutti, Chupp, Goldhaber, Goldhaber, Helmy, and Iloff, "Interaction of Positive K-Mesons," Phys. Rev. 101, 1617-1618 (1956).

Table I

Data on the production of positive and negative K mesons

T_p	Particle	θ_{lab} (degrees)	P_k	L (in.)	At Stack: $K/cm^2/10^{12}p$	At Stack: $\pi/cm^2/10^{12}$	At Stack: π/K	$\frac{K^+}{\pi^+}/\frac{K^-}{\pi^-}$ T_p, P_k, θ_ℓ const	At Target: π/K	Target material
6.2	K^+	90	250	119	40 ± 6	8.2×10^3	$2.0 \pm 0.3 \times 10^2$		22 ± 3	Cu 20.5 g/cm^2
6.2	K^-	90	250	119	0.7 ± 0.1	9.8×10^3	$1.4 \pm 0.3 \times 10^4$	68 ± 16	$1.5 \pm 0.3 \times 10^3$	"
6.2	K^+	90	350	137	50 ± 9	3.9×10^3	78 ± 14		15 ± 3	"
6.2	K^-	90	350	137	1.2 ± 0.2	3.8×10^3	$3.1 \pm 0.5 \times 10^3$	40 ± 10	600 ± 97	"
4.2	K^+	90	250	119	13 ± 2	5.5×10^3	$4.2 \pm 0.6 \times 10^2$		45 ± 6	"
2.6	K^+	90	250	119	9.8 ± 1.6	6.9×10^3	$7.1 \pm 1.2 \times 10^2$		75 ± 12	"
6.2	K^-	90	430	168	1.5 ± 0.4	7.5×10^3	$5.0 \pm 1.3 \times 10^3$		$1.2 \times 0.3 \times 10^3$	Al 8.9 g/cm^2
6.2	K^-	0	430	264	68 ± 12	2.3×10^5	$3.4 \pm 0.6 \times 10^3$		350 ± 64	Cu 79.8 g/cm^2

L = distance in inches from target to stack position

T_p = proton bombarding energy

PHYSICS RESEARCH

Burton J. Moyer in charge

NUCLEAR ABSORPTION OF μ MESONS

Selig Kaplan

An experiment is in progress to ascertain the nuclear excitation induced by cosmic ray μ mesons captured at rest. The technique consists of counting the number of neutrons emitted by the excited nucleus and, from known binding energies and an assumed thermodynamic model, inferring the nuclear excitation. The stopping mesons are identified by their signature in a cosmic ray telescope and the neutrons are detected in a cadmium-loaded liquid scintillator (Ref: Hicks, Pyle, and Ise, Phys. Rev. 101, 1016, 1956). The information is displayed on the faces of two oscilloscopes and is recorded on film.

The apparatus was first operated successfully as a unit early in May. For the first month of operation preliminary runs were made with Ag and Al targets and with no target as aids for making various electronic and mechanical adjustments. Since the middle of June data have been accumulated using a Pb target. On the average, one meson was stopped per 1.5 hours of running time. To date we have observed approximately 500 stopping mesons. The neutron data are not sufficiently reduced to present here at this time.

PHOTON ENERGY SELECTOR

Robert J. Cence

The development of a counter to select high-energy photons at the synchrotron is being continued. Experimentation with different arrangements of the scintillator light pipe and phototube are being carried out in an effort to reduce the large electron background that is present.

π^- NUCLEAR CROSS SECTIONS AT 4.3 Bev/c

N. Fredrick Wikner

Analysis of the π^- nuclear cross sections reported previously, in terms of the optical model, is nearly complete. This analysis yields values for the nuclear radius, mean free path, and opacity depending on the model of the nucleus employed--uniform, Gaussian, or some other distribution of nucleons in the nucleus.

A statistical model analysis of the nucleus is most valid for the heavier elements (e.g. Cu → U and perhaps Al). Since a heavy-element cross-section measurement was not obtained in our experiment, the measurements by Ise, Lagarrigue, and Pyle (UCRL-3124 and private communication) at 3.2 and 5 Bev/c in Pb using a multiplate cloud chamber will be employed when the values become available.

Another important parameter in the optical model analysis is the average nucleon cross section in a nucleus, $\bar{\sigma}$. Investigation of the best value to use for $\bar{\sigma}$ is under way at this time.

When these separate studies are completed, final analysis will be possible.

π^0 MODES OF HEAVY-MESON AND HYPERON DECAY

John E. Osher and Sherwood I. Parker

Work during this period involved brief extensions to the results described in the preceding Quarterly Report and preparation of a more detailed report published as UCRL-3449, June 1956.

The extensions were to be accomplished by using the counter telescope to examine regions very near the target for contributions from ξ^+ or ξ^0 decay products, including high-energy gamma rays. It was found, however, that bremsstrahlung from the slit jaws made measurements within 1 cm of the target (the region of interest) impractical with present collimation. In addition, a very brief run was made for off-target-axis decays upstream and downstream from the target, lending support to the previously reported very-peaked-backward (and presumably forward) K emission in the center of mass for associated production at energies near 6.0 Bev.

SCATTERING OF 100- TO 145-Mev GAMMA RAYS BY PROTONS

Larry L. Higgins

A repeat experiment has been carried out at the synchrotron to measure the cross section for scattering of gamma rays from protons. A fivefold coincidence converter-telescope, preceded by an anticoincidence scintillator, was used to count the high-energy photons scattered at 90° to the beam. The recoil protons were not detected because they stop in the target. A carbon absorber in front of the gamma-ray detector was used to stop low-energy electrons. A liquid hydrogen target was used, the effective dimensions of which were 1 in. diameter by 4 in. long. All counts were recorded photographically by means of a 517 Tektronix oscilloscope. The scope was triggered by a triple coincidence. Counts due to electrons scattered into the counter were rejected by photographic observations of the anticoincidence pulse.

The cross section was measured as a function of energy up to 145 Mev using the photon difference method by varying the energy of the synchrotron. The elastic-scattering cross section was measured only below the π^0 threshold. The counting rate at 140 Mev was about 5 counts/hour. The converter-in/converter-out ratio was 6. The target-full/target-empty ratio was 6. The gamma-ray detecter was calibrated for efficiency directly in the synchrotron bremsstrahlung beam by the photon difference method. The film is now being read, and the data seem to indicate that the cross section as a function of energy at 90° is constant up to the π^0 threshold. These results agree roughly with the calculation by Powell.

BISMUTH FISSION CHAMBER

Wilmot N. Hess

The large bismuth fission chamber and the duplicate chamber containing no bismuth were used in a run at the Bevatron in the neutral particle beam. Integral bias curves were taken for both chambers. The bismuth chamber counted several times as fast as the no-bismuth chamber for all bias settings. A typical ratio of bismuth-to-no-bismuth chamber counting rates was 12:1 at 15 volts bias and roughly 100 db amplification. Cf^{252} spontaneous fission sources placed in both chambers gave integral bias curves that were flat below 20 volts bias, indicating that all fission pulses were being counted. A transition curve was taken by placing up to 12 in. of lead in the neutral particle beam. After a small rise in counting rate--probably due to secondary particle production--the transition curve showed a decrease consistent with the geometric cross section of lead. This indicated that we were counting neutrons, not gamma rays.

As a result of the success with the bismuth fission chamber, we decided to try to use this chamber to obtain information about the high-energy cosmic-ray neutron flux. The bismuth and no-bismuth chambers, with their associated electronics and other counters to monitor lower-energy neutrons, were mounted in a trailer and taken to the White Mountain Research Station near Bishop, California. The apparatus is operating successfully in this situation at the present time. We have not yet tried to separate the charged-particle-induced events from the neutral-particle-induced events, but plan to do so.

AN EXPERIMENT ON THE DIRECT PRODUCTION OF ANTINEUTRONS

John M. Brabant, Lowell S. Brown, Burton J. Moyer, John E. Osher, Robert K. Squire, and Roger W. Wallace

Two possibilities exist for the creation of antineutrons that could be observed under laboratory experimental conditions. One possibility involves the charge-exchange collisions of antiprotons with protons. This method would be utilized by an appropriate charge-exchange converter in the antiproton beam, followed by a suitable counting apparatus for identifying the antineutrons. The second possibility involves the direct production of antineutrons in the Bevatron target and their identification as part of the primary radiation emerging therefrom.

The experiment described here is based upon the second possibility. We propose to distinguish the antineutrons from the ordinary neutrons, which are produced in vastly greater abundance, by the use of flight-time information coupled with pulse-height analysis of events in a large volume of dense glass.

In more detail, the principle of the experiment is the following. The Bevatron beam strikes the target with a radio-frequency structure associated with the operating principle of the machine. Each pulse of the magnet typically

involves approximately 10,000 traversals through the target of the bunch of particles that have been accelerated (not all particles of the bunch strike the target on each traversal). The fundamental beam-pulse associated with each traversal is ten to fifteen shakes in duration (one shake equals 10^{-8} sec). The ordinary neutrons and the antineutrons that progress in the forward direction from the target are to be detected by the glass counter array at a distance of 200 meters. The antineutrons, by virtue of the energy expended in creating a nucleon pair, will be moving with a velocity near that of the center of mass defined by the incident proton and its target nucleon. Consequently, the pulse of antinuetrons arriving at the distant glass counter will have become dispersed from ordinary neutrons of considerably higher energy. It is believed that the ordinary neutrons that move with the same velocity as possessed by the antineutrons will not produce pulses in the glass that compete in size with those due to the annihilation of antineutrons.

To select the proper time interval to bracket the arrival time during each rf cycle of the band of antineutrons of the desired velocity, it is necessary to define a counting gate about 10 shakes long at the appropriate phase of each rf cycle. Owing to the rather large background of cosmic-ray events in the array of glass counters, it is important to open this counting gate only in connection with rf cycles that actually deliver beam upon the Bevatron target. In addition, it is necessary to insure a type of Bevatron operation that preserves a desirably sharp rf pulse of beam at the target with a minimum of particles drifting outside of phase stability.

The various aspects of this experiment have been under study, and results have encouraged the preparation for trial of the experiment. The glass counting array is now essentially complete and will involve 20 glass blocks each 6 by 9 by 18 in. and each viewed by 14 photomultiplier tubes. An electronics arrangement which permits the identification and pulse-height analysis of large pulses occurring within the counting gate associated with each rf cycle has been prepared and tested. Considerable experience has already been acquired with such glass Cerenkov counters in connection with the antiproton experiment of last fall.

The rf structure of the beam has been the most uncertain feature, although proper control of operating parameters appears to allow the achievement of a pulse character in which the peak intensity during an rf cycle is several hundred times the minimum intensity during the cycle. It is possible that this structure will allow the experiment to succeed in principle.

A special experimental house to contain the glass counter and its associated electronic equipment has been prepared at a distance of 200 meters from the Bevatron target along the 0° beam line.

CLOUD CHAMBER STUDIES

Wilson M. Powell in charge

Experiments with Diffusion Chamber

5.3-Bev p-p INTERACTIONS

William B. Fowler, George Maenchen, Wilson Powell, and Robert Wright

About 100 additional events resulted from two Bevatron runs during this quarter. Standard diffusion chamber operation was used in the first of these runs (4 pulses per minute), while in the second run (1 pulse per minute) a new technique of partial expansion was successfully tried. The necessity of prohibiting intermediate Bevatron pulses during runs has significantly limited the diffusion chamber. This limitation is directly related to the complex mechanism of track formation in a diffusion chamber. The partial-expansion technique was tried in order to allow the Bevatron to operate at full repetition rate during diffusion chamber runs; the alternate Bevatron pulses were used for other experiments. Enough information was obtained during the second run to show that this new technique is very promising.

Detailed analysis of the new events is under way and a report should be available in the near future.

PROPANE BUBBLE CHAMBER: n-p and n-CARBON INTERACTIONS

John Elliot, Earle C. Fowler, William B. Fowler, Richard Lander, Larry Oswald, Richard Thomas, and Wilson Powell

After satisfactory tracks due to ionizing particles had been observed in the propane bubble chamber, the need for development runs at the Bevatron was apparent. The objective was to bring the chamber into optimum operation with the accelerator without interfering any more than was absolutely necessary with the already full Bevatron program. This objective was best accomplished by placing the propane chamber in a neutron beam from the 73° K-station target area. To date we have approximately 10,000 pictures. The chamber has been shown to cycle at ten pulses per minute, and information has been obtained on operational parameters. Analysis of interesting events is in process.

REPORT ISSUED

A report on "Analysis of V-Particle Decays at Bevatron Energies" (thesis), by Baxter H. Armstrong has been issued as UCRL-3470. The abstract is as follows.

Two hundred and twelve neutral V-particle decays are analyzed with respect to their angular and momentum distributions, Q values, and production ratios. These V particles were produced in the stainless steel walls of a 36-atmosphere hydrogen-filled diffusion cloud chamber, by π^--meson,

neutron, and proton beams from the Berkeley Bevatron. Particular attention is paid to cloud-chamber bias effects. No correlation in the angle between production and decay planes is found for these decays, and it is shown that in some instances previous results showing small-angle preferences for this angle can be explained in terms of a cloud-chamber bias. There appears to be an excess of forward π^+ emission in the c.m. system of the θ^0 decays. Similarly there is an excess of backward-emitted protons for the Λ^0 decays, but this is at least partly due to bias. Some of the complicating effects of production in heavy nuclei are discussed in appendices, and an extensive collection of graphs useful for the dynamical analysis of neutral and charged V's is included. Four "anomalous" neutral V's were found among these decays that do not fit a Λ^0 or θ^0 decay mode.

Equipment and Techniques

30-INCH PROPANE BUBBLE CHAMBER

Wilson M. Powell and group

A large propane chamber, 30 by 18 by 6 in., utilizing hydrostatic support, has been preliminarily designed. Emphasis has been placed on (a) simplicity, (b) standard proved techniques, and (c) minimum cost. The final chamber should be reliable, easy to operate, and available for experiments in a comparatively short time.

35-ATMOSPHERE HYDROGEN DIFFUSION CHAMBER

Robert Good and John Schonle

The partial-expansion technique discussed above opens up the possibility of using deuterium gas in the 35-atmos. hydrogen chamber. The deuterium gas that is available is unavoidably contaminated with tritium to a small extent. The beta particles from the decay of this small amount of tritium interfere with normal diffusion-chamber operation. The expansion technique eliminates this difficulty. Tests on operational parameters are being conducted with the goal of doing a 4.5-Bev π^--d experiment at the Bevatron.

PHYSICS RESEARCH

Chaim Richman in charge

K MESONS

Four emulsion stacks have been exposed to magnetically analyzed and focused beams of positive particles of about 500 Mev/c momentum, emitted from Bevatron targets at 0°, 30°, and 60° from the direction of the incident protons. The scanning of these emulsions will give the relative fluxes of protons, pions, and K particles. Comparison of the relative and the absolute fluxes will determine the best conditions for a proposed experiment to study the interaction of K^{+} particles with protons and neutrons. (Highest absolute K flux for still-acceptable pion-to-K ratio.)

In addition to the momentum-analyzing stack at the 30° exposure, another stack has been exposed to a momentum-focused pion and K beam, separated from the proton beam by an absorber between two magnetic fields. A similar experimental setup will be used for the final experiment on K-particle interaction.

At the 60° position a separated K beam was set up and was used to expose stacks that will be scanned at UCLA for K-particle interactions in emulsion. Numerous other stacks were exposed at the same time for other groups.

NEGATIVE PROTONS

The collaborative negative-proton work is being written up for publication. Work is still continuing on the analysis of elastic-scattering events of the negative protons. The number of p^{-} scatterings observed (9) are roughly consistent with diffraction scattering from "black" nuclei. One interesting feature is an apparent destructive interference between Rutherford and nuclear scattering between 2° and 6°. The probability that this would happen as a fluctuation from a Rutherford distribution is approximately 0.001. The scanning efficiency and correction factors have been checked by measurements on the tracks of 50 positive protons in the energy region 50 to 100 Mev, where it is known that Rutherford scattering predominates.

A second collaborative p^{-} exposure has been made, and the plates are now being scanned.

AUTOMATIC SCANNER

Preliminary designs are being considered for an automatic scanning device that will differentiate between tracks of various grain densities.

PHYSICS RESEARCH

Emilio Segrè in charge

ANTIPROTON WORK

The two preceding quarterly periods have mainly been spent in preparing for an antiproton run, with most of the group involved in one way or another. A liquid hydrogen target was constructed, with an absorption length of 36 inches, utilizing styrofoam insulation. A large multilayer scintillation counter has been constructed to provide a counter in which many of the products of antinucleon annihilation can be brought to rest. The dimensions of the active volume of the large counter are 24 by 24 by 24 inches; it is made up of alternate layers of lead and plastic scintillator such that the average density of the counter material is 3.9 g/cm^3 and the radiation length in this material is about 1.0 inch. This counter is expected to be especially useful in stopping antineutrons because it should be sensitive to both charged and neutral products of antinucleon annihilation.

Two 8-in.-diameter magnetic lenses each consisting of three quadrupole magnets were constructed and are now being tested.

Two velocity-selecting Cerenkov counters of the Fitch design have been constructed and partially tested. The Cerenkov radiator is made of an alcohol–carbon disulphide solution with optical index 1.59. These counters do not count particles below velocity 0.63 c and, because of the onset of total internal reflection, the counters should not count particles with velocities above 0.81 c, where c is the velocity of light. These counters act as crude velocity selectors, counting only those particles having a velocity within the interval 0.63 c to 0.81 c. With the aid of these counters we hope to be able to tolerate a very large flux of pi mesons through the antiproton-selecting apparatus without trouble from accidental coincidences due to the pi mesons.

A combination Cerenkov counter and target (11 in. long) has been constructed, to hold liquid oxygen, water, or heavy water. Annihilations can be detected from the Cerenkov radiation emitted in the target material. It is hoped that we may measure specifically the annihilation cross sections as well as the total cross sections for antiprotons incident on protons and on neutrons. The antiproton-proton cross sections will be obtained from an H_2O-O_2 difference procedure, and the antiproton-neutron cross sections from a D_2O-H_2O difference.

For use in the same experiments two 15-in.-diameter counters were made, one a Cerenkov counter with a water radiator and the other a plastic scintillation counter.

For the coming antiproton run a new trajectory has been calculated with which it is hoped that from one to three antiprotons per pulse of the Bevatron may be obtainable. The details of the work to be done during the run are dependent to a considerable extent on the progress made by other groups prior to the run. Probable work includes measurement of proton and neutron total and annihilation cross sections for antiprotons as outlined

above. The total cross sections for a few other elements such as aluminum, tin, lead, and uranium will also be measured to augment the work previously done on beryllium and copper. A search for the antineutron will be conducted if the antineutron has not been found in the meantime. If time permits a search for new charged particles in the mass range 1000 m_e to 3000 m_e may be included, and an attempt may be made to determine at least approximately the production cross section for antiprotons in proton-proton collisions at 6.2 Bev. It may be possible to obtain a direct measurement of the ratio of charged to neutral mesons emitted in antiproton annihilation.

EXPOSURE OF PHOTOGRAPHIC EMULSIONS TO A 480-Mev/c SEPARATED POSITIVE-K-MESON BEAM

Gerson Goldhaber and Joseph E. Lannutti

In line with our program of studying the interactions of K mesons in photographic emulsion, we, in conjunction with Donald Stork, have designed and used a system for obtaining a beam of positive K mesons with a much reduced light meson contamination and with an energy higher than that previously studied. The system employs focusing coils, two magnets, and a beryllium degrader. Particles produced by 6.2-Bev protons on a drop-string copper target are accepted by the system if emitted at an angle of 58° and with a momentum of 725 ± 23 Mev/c. After passing through the energy degrader the K mesons have been reduced to a momentum of 480 ± 33 Mev/c; they are focused on an emulsion stack.* Preliminary study of a stack indicates that we have obtained an average K-meson flux of approximately 400 K's/cm^2 for 4.7×10^{13} protons on the target. The ratio of K mesons to light mesons and electrons is roughly unity at beam center.

STUDY OF THE ANTIPROTON ANNIHILATION PROCESS

Gerson Goldhaber

As part of the cooperative program on the study of antiproton annihilations in nuclear emulsions, we have exposed another stack of plates, stack No. 72, to the 700-Mev/c P^- beam.* This stack consists of two hundred 6-by-9-in. plates having an emulsion layer 600μ thick. To date seven new P^- annihilation stars have been found in this stack. This brings the total number of P^- stars found by this group to twenty-two. A paper on the earlier work is in preparation.

---

* Exposure carried out jointly with Warren W. Chupp and Sulamith Goldhaber.

ARC RESEARCH

Chester VanAtta in charge

HIGH-VACUUM AND ULTRA-LOW-TEMPERATURE REFRIGERATION

Hugh R. Smith and Patrick B. Kennedy

Work is continuing on the attainment of lower pressures and higher pumping speeds with conventional diffusion pumps. The approach adopted has been to control the migration of the pump fluid and to trap out residual condensable vapors in the vacuum enclosure.

It has been found that a cold crown over the top nozzle hood in combination with a cold liner over the top jet condensation area on the inside of the barrel cuts down the backstreaming drastically. The major offender was found to be the hot top nozzle hood which reemitted pump fluids upward through the pump orifice at very high rates. Initial tests on a 32-inch mercury-diffusion pump indicate that these additions to the pump minimize the backstreaming to such an extent that the so-called "optically opaque" baffles are not required between the pump and the vacuum tank. Such a baffle has inherently high flow impedance and its elimination yields a net pumping speed for the pumping unit approximately twice as great as the speed with the baffle.

It is, however, often desirable to provide cold surfaces for trapping out condensable vapors from the vacuum enclosure. Water vapor is the most troublesome because of its extremely high vapor pressure (0.4 microns Hg at -80°C, for example) and liquid nitrogen has been the conventional refrigerant used to trap it out. Mechanical refrigeration units have been developed to replace the liquid nitrogen in permanent installations. The first of these units other than the developmental models was placed in operation in the heavy-ion accelerator during the week of Aug. 13, 1956. It is being brought into adjustment, and present indications are that its design operating temperature of -120°C will be readily achieved.

ACCELERATOR OPERATION AND DEVELOPMENT

BEVATRON

Edward J. Lofgren in charge

Further progress in the Bevatron program is the subject of a forthcoming separate report by Edward J. Lofgren and Walter D. Hartsough, "Bevatron Operation and Development. X, May, June, and July, 1956," UCRL-3519.

184-INCH CYCLOTRON

Robert L. Thornton in charge

MODIFICATION

Richard Burleigh

The following work on the modification has been finished during this quarter:

1. Magnet regulator testing.
2. Magnet measurements and shimming.
   - 2.1 Preliminary mapping of field over entire pole.
   - 2.2 Orbital surface position measurements.
   - 2.3 Preliminary testing for deflector.
   - 2.4 Shimming of 90° segment preliminary to shimming entire pole.
   - 2.5 First shimming of entire pole.
   - 2.6 Measurements for shimming out effects of bolts.
3. Installation of capacitor vacuum tank.
4. Installation of the last two of the six diffusion pumps.
5. Balancing of the two new pairs of blades, installation of the blades in the capacitor vacuum tank, and preliminary running of the two pairs together in vacuum for the first time.
6. Installation of final movable panels.
7. Installation of plumbing to blades and motors.
8. Installation of hinged door to capacitor vacuum tank.

Work is in progress on the following items:

1. Magnetic measurements on first shimming of entire pole.
2. Design of steering magnet (copper and steel out for bids).
3. Design of miscellaneous minor items associated with rf system.
4. Design and construction of final transmission lines.
5. Design of access doors to auxiliary coils.
6. Design of beam scraper.
7. Installation of the main platform.
8. Installation of phase lines and other counting leads to cave areas.
9. Completing electrical installations in the oscillator rectifier room.
10. Testing the vibrating blade control.

LINEAR ACCELERATOR

James Donald Gow in charge

OPERATION

The linear accelerator has operated on a normal schedule during the three-month period covered by this report. The oscillator system and tube design changes made early this spring have resulted in a greatly reduced tube-failure rate. The average life of oscillator tubes on the machine is now approaching 2000 hours. Metering of the filament and plate circuits indicates that the tubes are not deteriorating.

The feedback energy-control system has been successfully tested.

60-INCH CYCLOTRON

Joseph G. Hamilton in charge

DEVELOPMENT: THERMISTORS AT WORK ON THE 60-INCH CYCLOTRON

Kenneth Jenkins

The thermal-sensitive resistor has found many useful functions in the operation of the 60-inch cyclotron. The thermistor has replaced several previously complex circuits with simpler (and trouble-free) units. It has made possible the continuous monitoring of certain temperatures in the cyclotron that it was not considered economically feasible to monitor in the past.

Remote Thermometers

A simple thermometer (Fig. 1) is used to measure the temperature of the copper in the magnet coils. The thermistor element (Western Electric 14B is encased in a glass bead, thus enabling us to insert the thermistor into the magnet coil without any special insulation. The temperature indication is accurate within 5% (over a range of 20°C to 100°C) on a standard linear meter marked 0° to 100°. The accuracy could be improved by using a special calibrated scale, but no need has been found for the increased accuracy.

The resistor R3 is added to equalize the hot resistance if several thermistors are to be used with one meter. R1 is adjusted to calibrate the meter at 75°C. A standard calibrating resistor should be used to maintain calibration as the battery decays, but a mercury cell gives a constant voltage over its life (6 months).

Multichannel Temperature Recorder

A 12-channel Speedomax recorder is used to record the relationship of the various functions of the cyclotron while it is in operation. Most of the operational meters (beam, dee voltage, oscillator power, arc voltage, and magnet current meters) on the control desk have a 10-millivolt output to feed the recorder. In addition, 13 thermistors (one reference) are used to measure 12 water lines or contact temperatures. The control panel (Fig. 2) consists of a mercury cell, 12 zero adjustment potentiometers, and a sensitivity potentiometer, which adjust the range from 10° to 25°C. Each thermistor is encased in an open bakelite tube and is connected to a central block by a 12-foot cable.

Vacuum Pressure Gauges

Several thermistor vacuum gauges (Weston D176255) were purchased for observation of their effectiveness in measuring the range of vacuum pressures used around the cyclotron. Tests on the drydock showed that the gauge effectively covers the range from atmospheric pressure down to 0.1 micron. Below a pressure of 1 micron, the thermistor vacuum gauge was not as sensitive as our vacuum ion gauges for the detection of gases used for hunting leaks (hydrogen, helium, and petroleum ether).

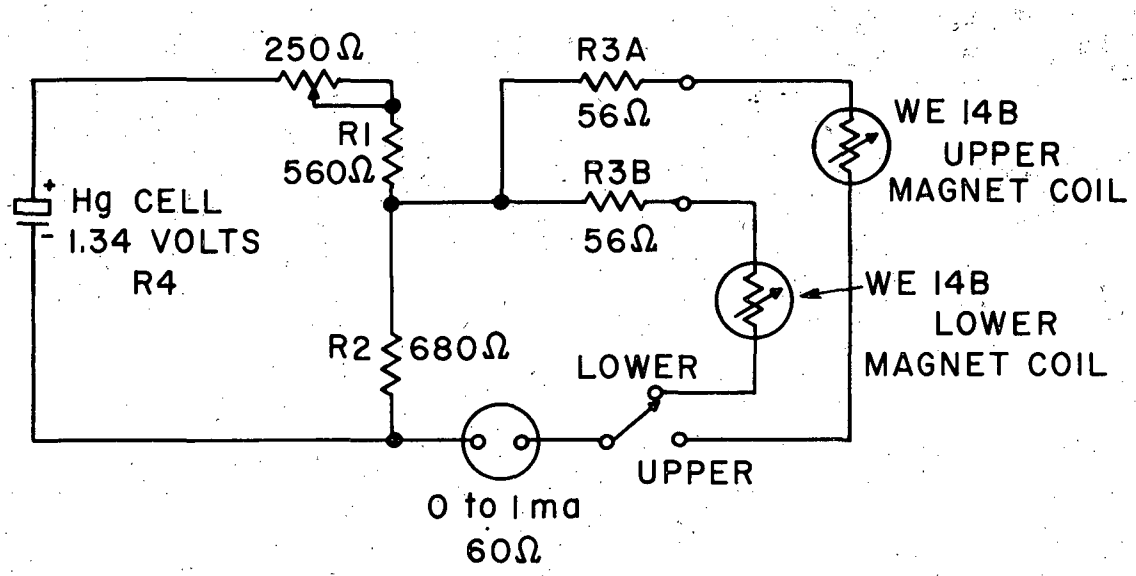

MU-12249

Fig. 1. Remote Thermometer.

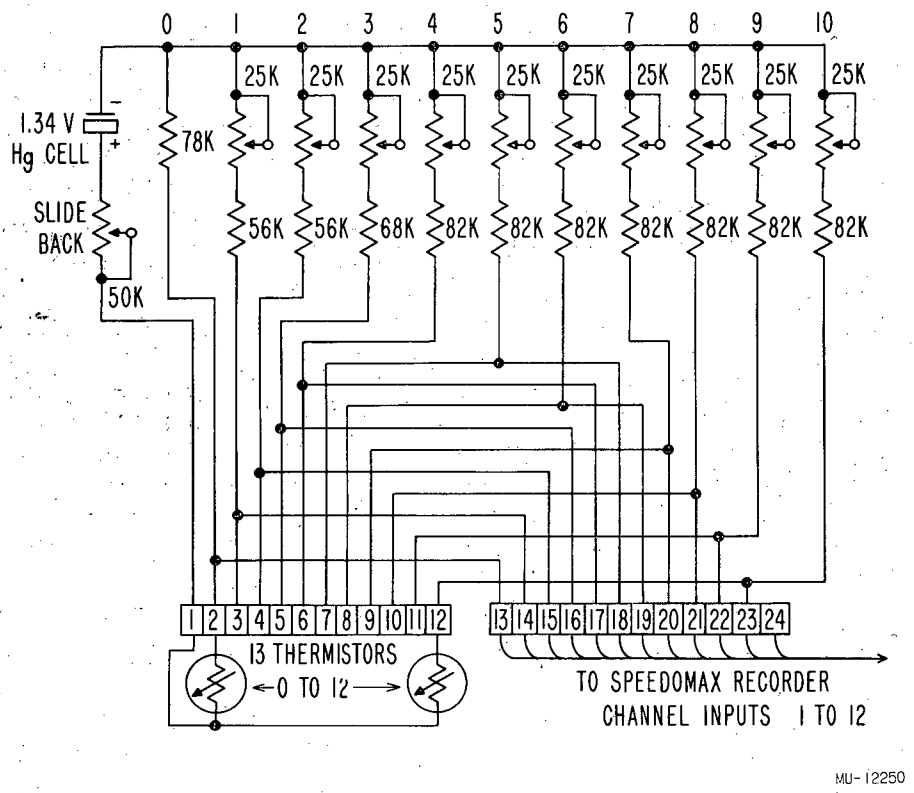

Fig. 2. Multichannel Temperature Recorder.

The sensitive element of the thermistor vacuum gauge is a small bead 0.02 inch in diameter suspended by two fine wire leads in a tubular bulb 3/8 inch in diameter. The thermistor vacuum gauge is similar to a Pirani gauge except that a thermistor is used instead of a platinum wire. A small current is passed through the thermistor, thereby heating it. The equilibrium temperature of the thermistor is dependent on the thermal conductivity of the gas around it. A relatively insensitive bridge can be used to measure the equilibrium temperature of the thermistor because of the high temperature coefficient of the thermistor. A similar evacuated thermistor is placed in the bridge to correct for changes in ambient temperature.

The thermistors are placed inside an old 6L6 metal tube shell for mechanical protection, and also, to prevent light from striking the two thermistors and upsetting the balance.

The volt-ampere characteristics of one of the thermistors are shown in Fig. 3 for air at several pressures between 10^{-5} and 760 millimeters of mercury. The operating point in general is to the right of the peak of these curves. The higher the current the lower the sensitivity and the higher the operating temperature of the thermistor. The maximum operating temperature must be limited to 200°C.

The circuit shown in Fig. 4 is sufficiently stable to measure down to 1 micron. The range switch increases the meter sensitivity, allowing the lower levels to be read with greater ease, thus making it possible to detect small changes in pressure.

The greatest advantage in the use of the gauge is in leak hunting at pressures too high for an ion gauge to operate safely. To further enhance the gauge's efficiency in leak hunting, a "slide wire" is used so that the meter can be left on a sensitive range. The slide wire is used to bring the meter reading on scale. Both the slide wire and the "zero set" serve the same function electrically, but by setting the zero set with the slide wire in the full clockwise position (while the gauge is connected to a high-vacuum system) one can avoid upsetting the true zero of the instrument by further adjustment of the slide wire control.

Beam Probe Monitor

The current collected on the internal beam probe is determined by measuring the amount of heat dissipated in the probe cooling water and converting this heat to an equivalent beam current.

The produce of the water flow and the temperature rise of the water gives the heat dissipated, but if we assume that the water flow remains relatively constant during a bombardment, the beam current can be taken as a function of the water temperature rise only. The system is calibrated before each bombardment by putting a power of 0.5 to 3 kw into a 20-ohm heater in the water-cooling line. A special wattmeter, which is adjustable for frequency of the cyclotron and the radius of the beam when it strikes the probe, reads the equivalent amount of beam for the particular cyclotron parameters. Two thermistors (Western Electric 14B) in the water line

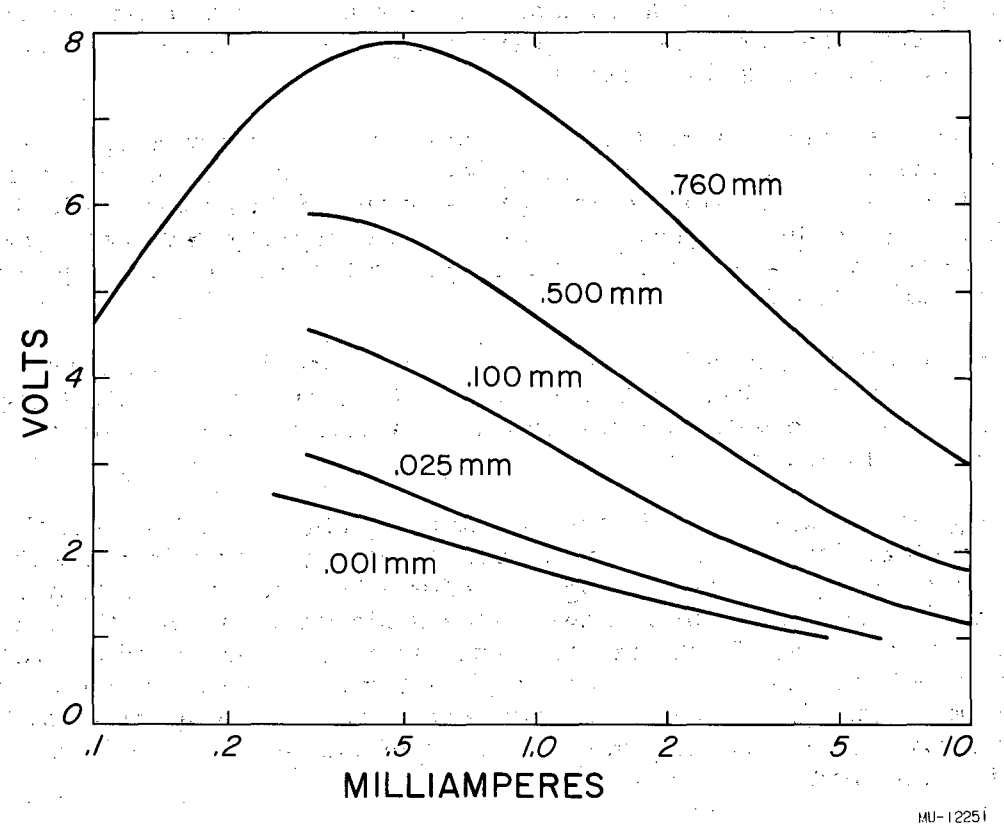

Fig. 3. Volt-Ampere Thermistor Characteristics for Different Air Pressures.

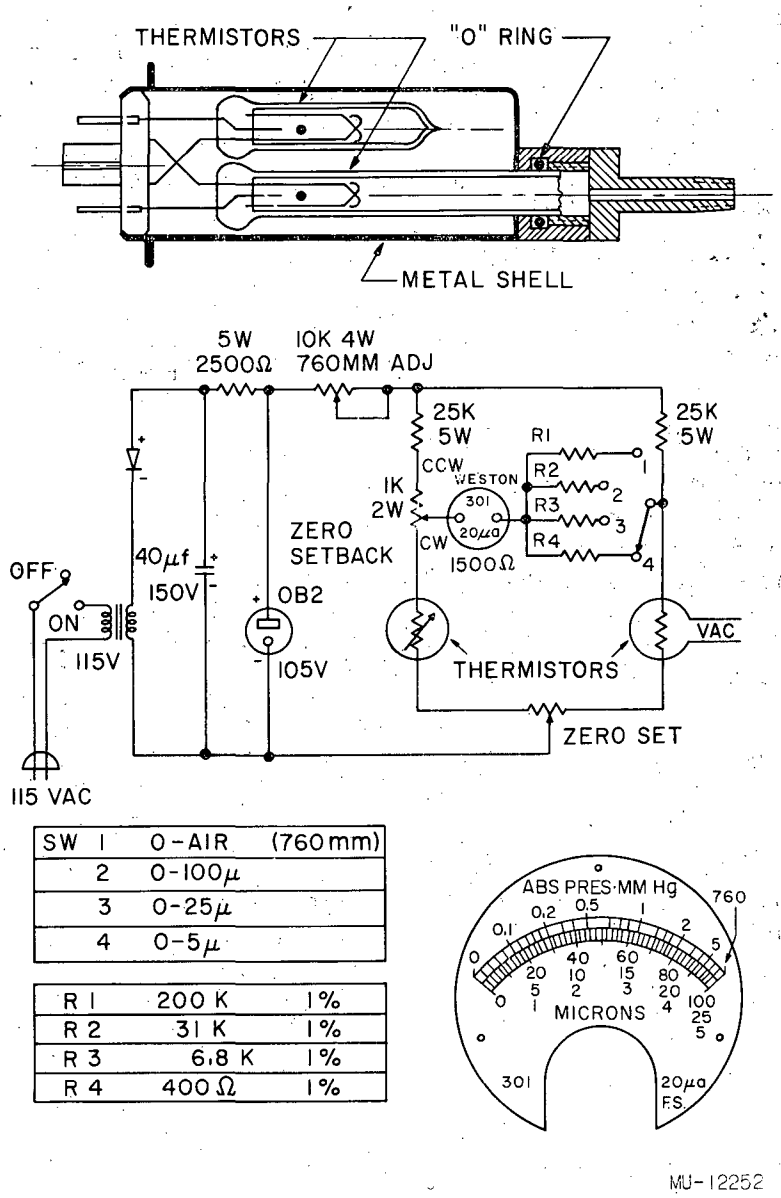

SW 1	0-AIR	(760mm)
2	0-100μ	
3	0-25μ	
4	0-5μ	

R 1	200 K	1%
R 2	31 K	1%
R 3	6.8 K	1%
R 4	400 Ω	1%

Fig. 4. Thermistor Vacuum Gauge.

measure the temperature rise of the water and convert this temperature into a current equivalent to that current that is read on the calibration wattmeter.

The schematic diagram of the temperature converter is shown in Fig. 5. Because of the wide variation of temperature and the need for a linear conversion, the nonlinear grid characteristics of a triode help to compensate for the logarithmic response of the thermistor. Tests show the current output to be linear within 5% for temperature between 10°C and 75°C. This temperature range will allow 500 microamperes of beam per gallon of water flow at the maximum energy of the beam. The high impedance and high voltage output of the converter allow the current to be fed directly into the regular beam-monitoring integrators. The variable calibration resistor can adjust for all variations in water flow and beam energy that are encountered on the cyclotron. For beams above 100 microamperes the calibration is adjusted to give a factor of 10.

OPERATION

Summary of operations as prepared by Peter McWalters for this quarter:

Alpha bombardments		761.6 hr
Deuteron bombardments		166.4 hr
Proton bombardments		16.4 hr
Beryllium bombardments		169.2 hr
Experimental bombardments		13.1 hr
	Operational total	1126.7 hr
Outage time		121.5 hr
	Available time	1248.2 hr
Shutdown		927.8 hr
Holiday		32.0 hr
		2208.0 hr

An operating efficiency of 90.3% was maintained throughout this quarterly period.

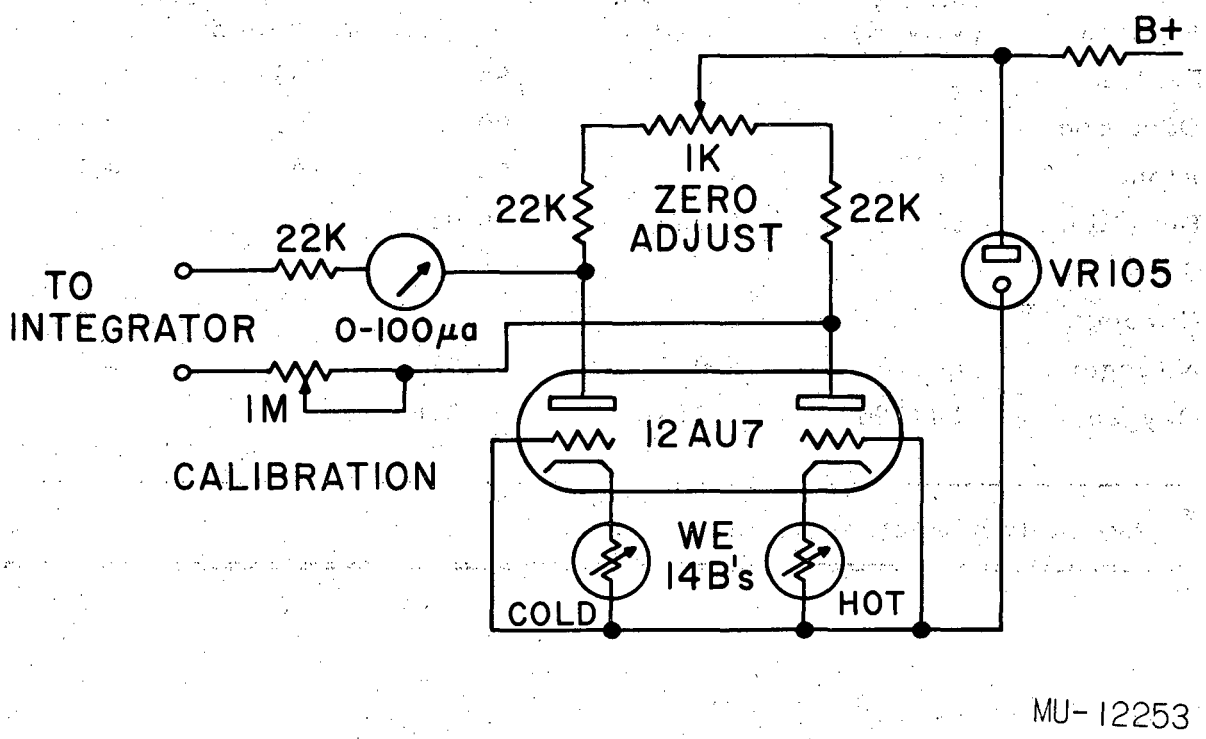

Fig. 5. Temperature Convertor.

During the last year (July 1955 to June 1956) the particles listed in Table I below were available for bombardments. The beam intensities and energies of the various particles are given in the table. No maximum intensities for internal proton, deuteron, and alpha beams are given, as the targets reached melting and (or) vaporizing points before maximum beams were attained. No attempts have yet been made on deflecting beryllium, nitrogen, and oxygen beams.

Table I

Particle Beam Intensities

		Beam Intensity, μa			
		Internal		External	
Particle	Energy (Mev/H)	Maximum	Average	Maximum	Average
Proton	12	--	180	85	50
Deuteron	24	--	500	150	70
Alpha	48	--	200	100	50
Beryllium	56	0.040	0.020	-	-
$Carbon^{12}$ *					
$Carbon^{13}$ *					
Nitrogen	100-168	0.060	0.020	-	-
Oxygen	104-196	0.018	0.010	-	-

* Available but not requested

SYNCHROTRON

Edwin M. McMillan in charge

RESEARCH PROGRAM

Robert W. Kenney

During the past quarter, the synchrotron has operated extremely well.

The major portion of the synchrotron's running time for this quarter was devoted to the observation of Compton scattering of photons from protons at 90°. The absolute cross section has been measured as a function of incident photon energy from 100 Mev to 140 Mev, and the data are now being reduced. Preliminary results indicate the cross section to be relatively independent of photon energy in the measured interval.

Robert Cence continued his development of a counting system for selecting photons of a given energy from the synchrotron bremsstrahlung beam. A counter observes electrons of a given energy after each has undergone a radiative collision in the synchrotron internal target. The associated photon then possesses a known energy and, with appropriate coincidence techniques, the synchrotron can be utilized as a monochromatic photon source.

A small fraction of the running time was devoted to adjustments of the synchrotron capacitor high-voltage regulator. This new device is now in full operation and has contributed measurably to the stability and high intensity of the synchrotron beam.

OPERATION

Rudin M. Johnson

The synchrotron was used for physics research experiments during this period. The peak energy of the beam was maintained below the meson threshold of 140 Mev during May and June. To maintain this energy, we ran the magnet at half voltage and adjusted the pulse so that the beam fell out before reaching 140 Mev. The synchrotron was run at full energy throughout July. The beam intensity continually improved over this period so that we are again running at the previous high intensity of 5×10^8 electrons/pulse.

The synchrotron-magnet voltage regulator has been debugged and is now in use. A marked improvement in the stability of the magnet voltage and the beam has resulted.

The electron beam spectrum of linac No. 2 was measured at approximately 3.3 Mev and was found to be 0.150 Mev wide at the half-intensity point. Dr. Lemmon and Dr. Newton continue to use the linac for chemistry experiments. A concrete radiation vault is being designed for the linac and will be located between the south synchrotron shield wall and Bldg. 68.

Information Division
10-2-56 sa