UCRL 3572
c.2

UNIVERSITY OF CALIFORNIA

Radiation Laboratory

TWO-WEEK LOAN COPY

This is a Library Circulating Copy which may be borrowed for two weeks. For a personal retention copy, call Tech. Info. Division, Ext. 5545

BERKELEY, CALIFORNIA

DISCLAIMER

This document was prepared as an account of work sponsored by the United States Government. While this document is believed to contain correct information, neither the United States Government nor any agency thereof, nor the Regents of the University of California, nor any of their employees, makes any warranty, express or implied, or assumes any legal responsibility for the accuracy, completeness, or usefulness of any information, apparatus, product, or process disclosed, or represents that its use would not infringe privately owned rights. Reference herein to any specific commercial product, process, or service by its trade name, trademark, manufacturer, or otherwise, does not necessarily constitute or imply its endorsement, recommendation, or favoring by the United States Government or any agency thereof, or the Regents of the University of California. The views and opinions of authors expressed herein do not necessarily state or reflect those of the United States Government or any agency thereof or the Regents of the University of California.

UCRL-3570

UNIVERSITY OF CALIFORNIA

Radiation Laboratory
Berkeley, California

Contract No. W-7405-eng-48

Z DEPENDENCE OF POSITIVE PION PRODUCTION BY 340 MEV PROTONS

William Imhof, Harry T. Easterday, and Victor Perez-Mendez

October, 1956

Printed for the U. S. Atomic Energy Commission

Z DEPENDENCE OF POSITIVE PION PRODUCTION BY 340 MEV PROTONS

William Imhof, Harry T. Easterday, and Victor Perez-Mendez

Radiation Laboratory
University of California
Berkeley, California

October, 1956

ABSTRACT

The relative yield of positive pions produced in various elements by the 340-Mev external beam of protons from the 184-in. Berkeley cyclotron was measured using a counter telescope to identify the mesons. The target materials used were Li (normal), Be, B^{10}, B^{11}, C, Al, Cu, Ag, and Pb. Mesons from these elements with energies 36 ± 4 Mev and 63 ± 4 Mev were observed at an angle of 135° relative to the proton beam.

The effect of the penetration of the protons into the heavier nuclei on the resultant yield of pions was observed and the result compared with Gasiorowicz's theory. In the lighter nuclei, the effects of the increasing momentum-density distribution from Li to C were noted and approximate 1/e values were obtained for assumed gaussian momentum distributions.

Z DEPENDENCE OF POSITIVE PION PRODUCTION BY 340 MEV PROTONS

William Imhof*, Harry T. Easterday**, and Victor Perez-Mendez

Radiation Laboratory
University of California
Berkeley, California

I. INTRODUCTION

The production of pions from complex nuclei, as contrasted with the basic production process from a free nucleon, is complicated by the effects of binding energy, internal momentum, the exclusion principle, the Coulomb barrier, and meson reabsorption.[1] Some experimental evidence for these modifications lies in the observation that the efficiency of photoproduction of pions exhibits approximately an $A^{-1/3}$ dependence.[2,3] The production of pions by proton bombardment is complicated further by the interaction of the incident protons in nuclear matter,[4] resulting in a more complicated A dependence for the production efficiency. In order to learn more about such processes, we bombarded Li, Be, B^{10}, B^{11}, C, Al, Cu, Ag, and Pb targets at the Berkeley 184-inch cyclotron, and counted positive pions emitted at 135° to the beam line.

* Present address: Lockheed Aircraft Corporation, Palo Alto, California.

** Present address: Department of Physics, University of Oregon, Eugene, Oregon.

II. EXPERIMENTAL METHOD

The experiment was done using the scattered external beam of 340-Mev protons produced by the 184-inch Berkeley cyclotron. The experimental arrangement is shown in Fig. 1. The proton beam current was monitored by a parallel-plate ionization chamber filled with argon. The positive pions emitted from the target at 135° to the incident proton beam were counted by a telescope consisting of three plastic scintillators in which identification of the pions was made by their characteristic π to μ decay.[5] The scintillators were 3 in. by 3 in. by 1/2 in. in size, and were each viewed by a matched pair of 1P21 photomultipliers, thus insuring a fairly uniform pulse-height response over the area of the scintillator. The operation of the counter telescope is as follows: Output pulses due to the passage of charged particles through the first two plastic scintillators were selected at a sufficiently high bias to minimize the response to low dE/dx particles. The output pulses of the first two scintillators were fed to a diode-coincidence circuit ($\tau \approx 5 \times 10^{-9}$ sec) and the output was amplified and used to trigger a fast univibrator circuit which produced a gate pulse 6×10^{-8} sec wide. This gate pulse was delayed by 3×10^{-8} sec and put in coincidence with pulses obtained from the third scintillator. In order for a positive pion to be counted, it had to pass through the first two scintillators with sufficient dE/dx, then stop, and decay into a μ meson in the third scintillator within a time interval of 3 to 9×10^{-8} sec. Thus, by requiring the pions to stop in the third scintillator, the energy band accepted by the telescope is determined by the amount of absorber placed in front of the telescope. Fig. 2 shows a block diagram of the electronic circuitry.

The accidental counts in the telescope were determined by use of a duplicate coincidence circuit in which the gate pulse was delayed by 12×10^{-8} sec and which, because of the long delay, counted mostly accidental counts. The tracking of the two circuits was checked periodically by triggering the gate generator with an auxiliary 1-Mc pulser while the telescope was in its normal counting position in the cyclotron beam. As there is no time correlation between the megacycle pulses and the detector pulses, both circuits should have statistically equal counting rates under these conditions, and their counting efficiencies were adjusted accordingly. The tracking stability of the circuits deviated less than 5% during the entire experiment. Because the background counting rates were always maintained at less than 30% of the meson count, these fluctuations could, at most, contribute a 2% error.

The targets were all considerably larger in cross-sectional area than the proton beam and were of thicknesses ranging from 1 g/cm^2 to 1.75g/cm^2. The boron targets were in the form of compressed powder held in place by aluminum foils 0.002 in. thick. A similar container was necessary to protect the lithium from the air. Identical empty containers were used to obtain the background counting rates for these elements.

III. RESULTS

Corrections were made for the nuclear absorption of the proton beam and the nuclear interactions of the emitted pions in each target, and for the variation, between various targets of the energy resolution of the detector. None of these corrections amounted to more than 4%. Corrections that would merely change the detection efficiency by the same factor for all targets were not considered because only the Z dependence at each meson energy was of interest.

Table I gives the final data after the corrections were applied to the raw data. The errors shown are the standard deviations due to the counting statistics.

Table I

Relative positive-pion yields per proton in the nucleus at 135° to the incident beam produced by 340-Mev protons. At each pion energy the relative yields have been normalized to a carbon value of 1.00.

Target Nucleus	Pion Yields: Pion Energy, 36 ± 4 Mev	Pion Yields: Pion Energy, 63 ± 4 Mev
Li	0.858 ± 0.077	0.569 ± 0.272
Be	0.892 ± 0.039	0.568 ± 0.089
B^{10}	0.971 ± 0.048	0.826 ± 0.112
B^{11}	1.034 ± 0.051	1.061 ± 0.118
C	1.000 ± 0.031	1.000 ± 0.104
Al	0.950 ± 0.054	
Cu	0.745 ± 0.043	
Ag	0.453 ± 0.033	
Pb	0.321 ± 0.027	

IV. INTERPRETATION OF DATA

A. Interaction of Incident Protons

Figure 3 shows the Z dependence for the production of 36-Mev pions at $135^{\circ} \pm 7^{\circ}$ to the incident beam by 340-Mev protons and by 335-Mev bremsstrahlung.[6] A comparison of the two sets of data for target nuclei heavier than aluminum indicates that the pion-production efficiency drops off faster with increasing A under proton bombardment than under gamma bombardment. It has been pointed out by Gasiorowicz[4] that in the former case meson production is possible only in the "front" of the struck nucleus due to the energy degradation of the incident protons in nuclear matter. Figure 3 shows the A dependence for the production efficiency predicted by Gasiorowicz for a proton mean free path in nuclear matter of about 4.3×10^{-13} cm and for a meson mean free path of $2\ r_o$, where r_o = (nuclear radius)/$A^{1/3}$. On the same graph is shown the photomeson yield curve predicted by Brueckner, Serber, and Watson[7] on the basis of the optical model for a meson mean free path of $2\ r_o$. Because internal momentum, discussed in the next paragraph, has a dominant effect for elements lighter than alumiunum, these theoretical curves have not been extended into this region.[8,9]

B. Internal Momentum

The increase in meson yield in the light elements from lithium to carbon can be explained in terms of the internal-momentum distribution of protons in these nuclei, for, under the conditions of this experiment, the yield of 36- and 63-Mev mesons from a proton at rest is kinematically impossible.

The Z dependence for the production of 36-Mev and 63-Mev pions at 135° by 340-Mev protons as well as Clark's data[10] on the production of

40-Mev pions at 140° by 240-Mev protons is shown in Fig. 4. For each of these experimental conditions Table II lists the minimum momentum, P_o, that the struck nucleon has to have in order to make the reaction possible. For the purpose of calculating P_o it was assumed that in the proton-proton collision the final nucleons form a deuteron. Such a deuteron-forming reaction accounts for about 70% of the π^+'s produced in P-P collisions.[11] It was also assumed, as proposed by Neher,[12] that 20 Mev must be supplied to cover 8-Mev binding energy for the removed proton and approximately 12 Mev for the excitation and recoil of the residual nucleus. As the value 20 Mev is somewhat arbitrary, P_o was also calculated assuming that 30 Mev must be supplied. The resulting values of P_o are 10% to 14% higher. In applying these values of P_o to estimate internal-momentum distributions, as discussed later, the resulting differences in the 1/ê energy values are about 5%. Such differences are smaller than the errors introduced by the counting statistics in cases I and II, so only results based on the supplying of 20 Mev to the residual nucleus will be given.

Table II

Minimum momentum, P_o, that the struck nucleon must have in order to make the reaction possible given as a function of meson angle, pion energy, and proton energy.

Case	Meson Angle (deg.)	Pion Energy (Mev.)	Proton Energy (Mev.)	P_o (Mev/c)
I	135	36	340	184
II	135	63	340	291
III	140	40	240	391

It is seen that the higher the value of P_o, the greater is the variation of meson yield with atomic number for elements lighter than carbon. This suggests an increase with atomic number of the occurrence of high-momentum components in the momentum distribution. The data indicate that the protons in B^{11} have a larger mean momentum than in B^{10}, although, because of the statistical error, the difference of the two cross sections is not very significant.

The apparent difference in average internal momentum between the light nuclei can be expressed quantitatively in terms of the change in 1/e value for assumed gaussian momentum distributions. The experimental ratios were first corrected for meson and proton absorption as discussed above. Assuming the 1/e value for carbon, E_c to be 19.3 Mev, the 1/e values for Li and Be, E_{Li} and E_{Be} respectively, were adjusted to predict the corrected experimental pion production from Li and Be. This calculation was made on the assumption that all the protons in a nucleus with an internal momentum greater than P_o are equally effective in producing the mesons observed. The values of E_{Li} and E_{Be} so obtained are given in Table III. The errors indicated are due solely to the counting statistics of the experimental data.

Table III

Relative 1/e values for Gaussian distributions

Case	E_C (Mev)	E_{B11} (Mev)	E_{B10} (Mev)	E_{Be} (Mev)	E_{Li} (Mev)
I	19.3	19.9 ± 2.0	17.4 ± 1.6	15.4 ± 1.0	14.1 ± 1.4
II	19.3	19.8 ± 1.5	17.2 ± 1.5	15.0 ± 1.4	14.6 ± 3.0
III	19.3			15.5 ± 0.3	

In view of the simplified nature of these calculations one should probably take the absolute values less seriously than the relative values.

Wattenberg et al.[13] have obtained internal-momentum distributions from studies of the high-energy photoejection of neutrons and protons. They obtained 1/e values of 9.0 ± 1.0 Mev and 19.7 ± 1.5 Mev for Li and C respectively, indicating the same general trend among the light nuclei as observed in this experiment.

Wilcox and Moyer[14] find by bombarding light nuclei with 340-Mev protons and detecting two emerging protons in coincidence, that the protons in beryllium have a larger momentum than the protons in lithium. Beryllium and boron were seen to be rather similar.

V. ACKNOWLEDGMENTS

Sincere thanks are given to Professor A. C. Helmholz for his encouragement and advice throughout the course of this experiment. The theoretical discussions we had with Dr. Stephen Gasiorowicz and Dr. Warren Heckrotte were very helpful.

The assistance of Mr. Edward Knapp in taking some of the data is greatly appreciated. Finally we would like to thank Mr. James Vale and other members of the cyclotron crew for their help and cooperation during the runs.

REFERENCES

1. R. E. Marshak, Meson Physics, McGraw-Hill Book Company, Inc., New York, 1952, p.72.
2. R. F. Mozley, Phys. Rev. 80, 493 (1950).
3. R. M. Littauer and D. Walker, Phys. Rev. 86, 838 (1952).
4. S. Gasiorowicz, Phys. Rev. 93, 843 (1954).
5. Jakobson, Schulz, and Steinberger, Phys. Rev. 81, 894 (L) (1951).
6. Imhof, Perez-Mendez, and Easterday, Phys. Rev. 100, 1798 (A) (1955); W. Imhof, Z Dependence of Positive-Pion Production by 335-Mev Bremsstrahlung and 340-Mev Protons (Thesis), UCRL-3383, April 1956.
7. Brueckner, Serber, and Watson, Phys. Rev. 84, 258 (1951).
8. M. Lax and H. Feshbach, Phys. Rev. 81, 189 (1951).
9. E. M. Henley, Phys. Rev. 85, 204 (1952).
10. D. L. Clark, Phys. Rev. 87, 157 (L) (1952).
11. M. Gell-Mann and K. Watson, [The Interactions Between π Mesons and Nucleons], Ann. Rev. of Nucl. Sci., 4, p. 219.
12. L. K. Neher, Meson Production by High-Energy Neutrons (Thesis), UCRL-2191, April 1953.
13. Wattenberg, Odian, Stein, Wilson, and Weinstein (to be published in Phys. Rev.).
14. J. M. Wilcox and B. J. Moyer, Phys. Rev. 99, 875 (1955).

FIGURE CAPTIONS

Fig. 1. Experimental lay-out in the meson cave showing relative positions of target, detector, and shielding.

Fig. 2. Block Diagram of Electronic Detecting Apparatus.

Fig. 3. Relative 36-Mev π^+ yields per proton in the nucleus at 135° produced by 340-Mev protons and by 335-Mev bremsstrahlung. Both sets of data have been normalized to a carbon value of 1.00. Curve A describes the photomeson yields predicted by Brueckner, Serber, and Watson on the basis of the optical model for a meson mean free path of $2r_0$. Curve B represents the pion production efficiency for 340-Mev proton bombardment predicted by Gasiorowicz for a meson mean free path of $2r_0$.

Fig. 4. Relative yields per proton in the nucleus of 36-Mev and 63-Mev pions at 135° produced by 340-Mev protons and of 40-Mev pions at 140° produced by 240-Mev protons. Each set of data has been normalized to a carbon value of 1.00, carbon being the most accurately measured element common to all three experiments.

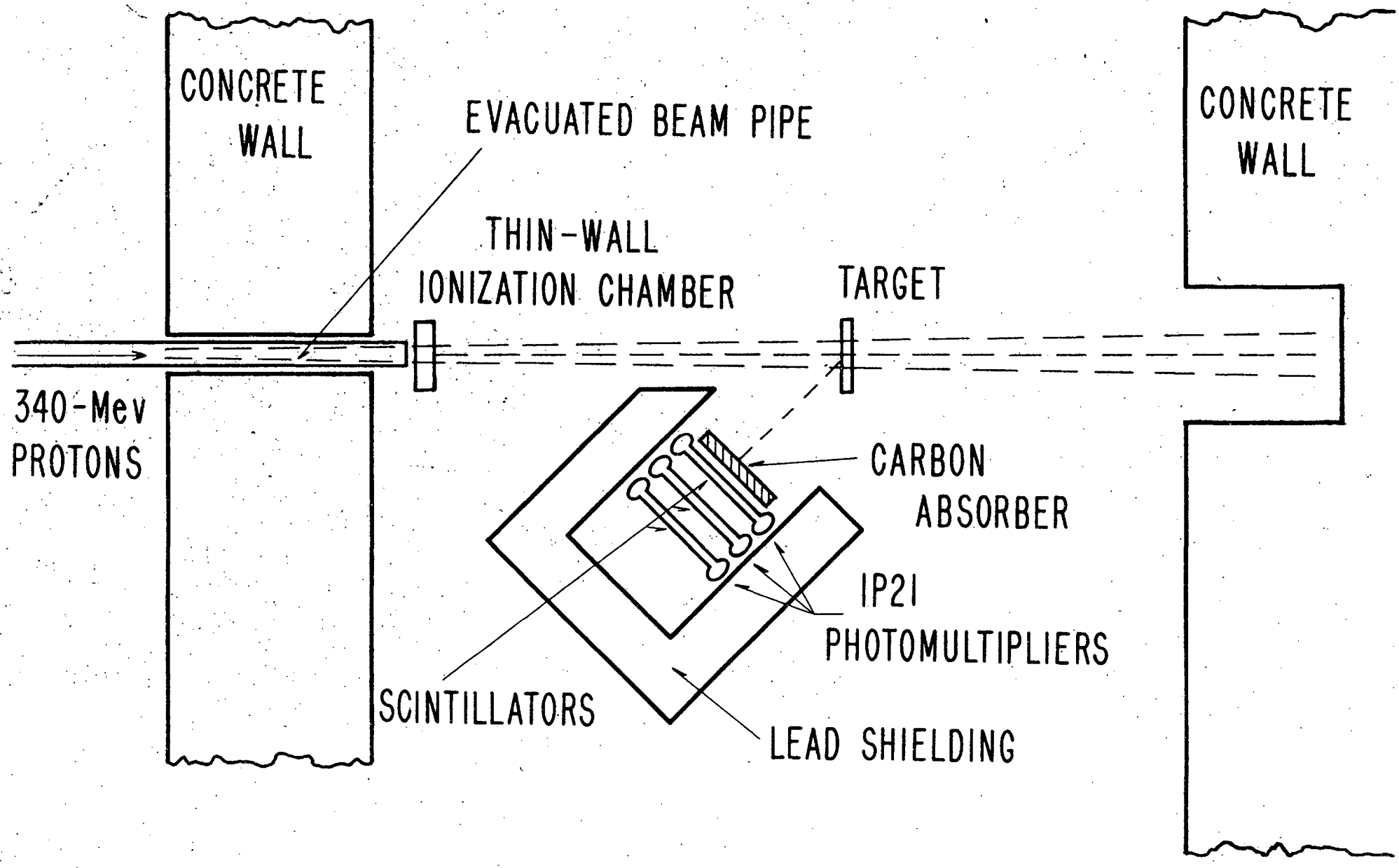
CONCRETE WALL
EVACUATED BEAM PIPE
THIN-WALL IONIZATION CHAMBER
TARGET
CONCRETE WALL
340-Mev PROTONS
CARBON ABSORBER
IP21 PHOTOMULTIPLIERS
SCINTILLATORS
LEAD SHIELDING

24701-1

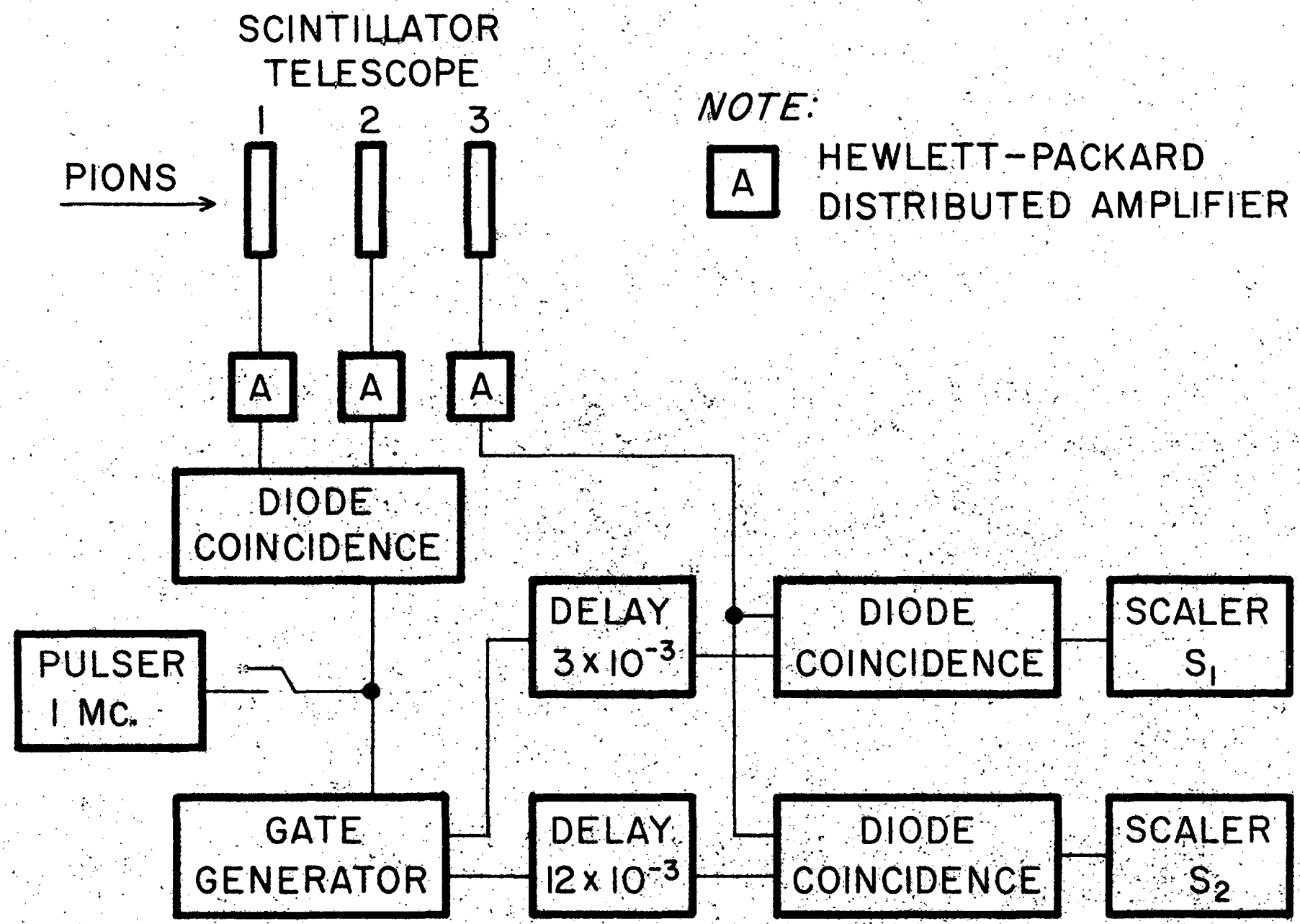
SCINTILLATOR
TELESCOPE
1
2
3
PIONS
NOTE:
A
HEWLETT-PACKARD
DISTRIBUTED AMPLIFIER
A
A
A
DIODE
COINCIDENCE
PULSER
1 Mc.
DELAY
3 x 10^-3
DIODE
COINCIDENCE
SCALER
S1
GATE
GENERATOR
DELAY
12 x 10^-3
DIODE
COINCIDENCE
SCALER
S2

24702-1

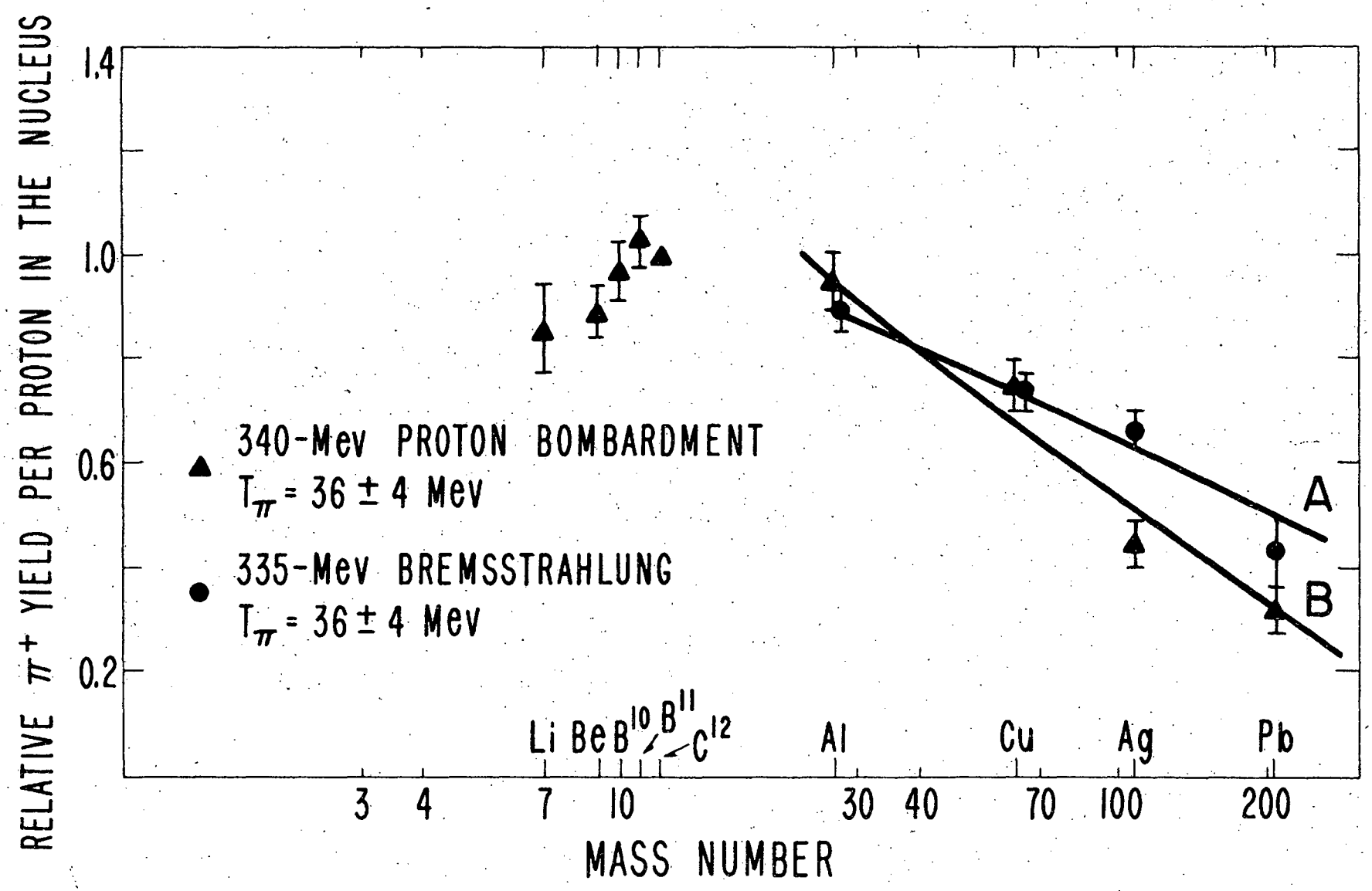
RELATIVE π^+ YIELD PER PROTON IN THE NUCLEUS
1.4
1.0
0.6
0.2
340-Mev PROTON BOMBARDMENT
T_π = 36 ± 4 Mev
335-Mev BREMSSTRAHLUNG
T_π = 36 ± 4 Mev
A
B
Li Be B^{10} B^{11} C^{12} Al Cu Ag Pb
3 4 7 10 30 40 70 100 200
MASS NUMBER

24703-1

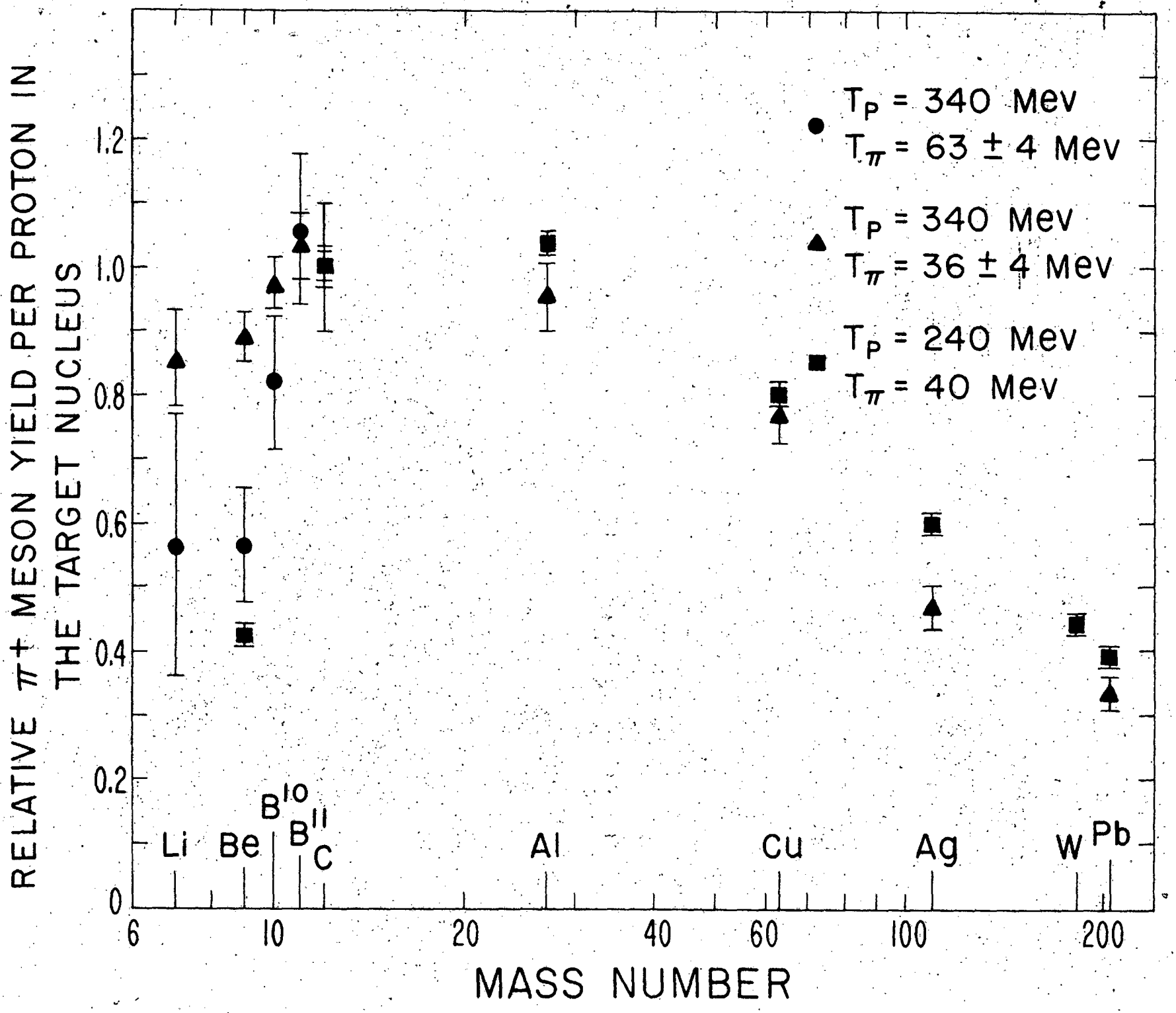
RELATIVE π+ MESON YIELD PER PROTON IN THE TARGET NUCLEUS
MASS NUMBER
T_P = 340 Mev
T_π = 63 ± 4 Mev
T_P = 340 Mev
T_π = 36 ± 4 Mev
T_P = 240 Mev
T_π = 40 Mev
Li
Be
B10
B11
C
Al
Cu
Ag
W
Pb
0
0.2
0.4
0.6
0.8
1.0
1.2
6
10
20
40
60
100
200