UCRL 3593
c.2

UNIVERSITY OF CALIFORNIA

Radiation Laboratory

PHYSICS DIVISION QUARTERLY REPORT

August, September, October 1956

TWO-WEEK LOAN COPY

This is a Library Circulating Copy which may be borrowed for two weeks. For a personal retention copy, call Tech. Info. Division, Ext. 5545

DISCLAIMER

This document was prepared as an account of work sponsored by the United States Government. While this document is believed to contain correct information, neither the United States Government nor any agency thereof, nor the Regents of the University of California, nor any of their employees, makes any warranty, express or implied, or assumes any legal responsibility for the accuracy, completeness, or usefulness of any information, apparatus, product, or process disclosed, or represents that its use would not infringe privately owned rights. Reference herein to any specific commercial product, process, or service by its trade name, trademark, manufacturer, or otherwise, does not necessarily constitute or imply its endorsement, recommendation, or favoring by the United States Government or any agency thereof, or the Regents of the University of California. The views and opinions of authors expressed herein do not necessarily state or reflect those of the United States Government or any agency thereof or the Regents of the University of California.

UCRL-3593
Physics Distribution

UNIVERSITY OF CALIFORNIA
Radiation Laboratory
Berkeley, California

Contract No. W-7405-eng-48

PHYSICS DIVISION QUARTERLY REPORT

August, September, October 1956

November 20, 1956

Some of the results reported in this document may be of a preliminary or incomplete nature. The Radiation Laboratory requests that the document not be quoted without consultation with the author or the Information Division.

Printed for the U. S. Atomic Energy Commission

PHYSICS DIVISION QUARTERLY REPORT

August, September, October 1956

Contents

GENERAL PHYSICS RESEARCH

Physics Research: Alvarez

Liquid Hydrogen Bubble Chambers
10-Inch Chamber 4
4-Inch Chamber 5
New Chamber 5
72-Inch Chamber 5
Data Analysis 5
Linear Accelerator 6
Search for Dirac Monopoles 6
Particle Interactions in Hydrogen 7
Destruction of Stored Cyclotron Beam by Coulomb Collisions . 7
Beam Storage in the 184-Inch Cyclotron 8
The Relativistic Clock Paradox 8
μ-Mesic Hydrogen Atoms 9
Studies of Neutral K Mesons 9
K^- Interactions in Liquid Hydrogen 9

Physics Research: Barkas

Enriched Negative K-Meson Beam 11
Antiproton Annihilation Process 11

Physics Research: Birge

K Mesons
Tau Mesons 12
K-Meson Fluxes 12
K-p Scattering 13
Charge-Exchange Scattering 13
Antiprotons
Scanning 13
Analysis 13

Theoretical Group: Judd 14

Physics Research: Lofgren

The K^- Mass and the Mass of the Σ^- Hyperon 23
Antiproton and Antineutron Experiments 25
Report Issued 26

---

* Preceding Quarterly Reports: UCRL-3524, UCRL-3410.

Physics Research: Moyer

Nuclear Absorption of μ Mesons 27
Neutron Spectrum and Yield from Proton Bombardment of Isotopes of Iron and Nickel 27
Photon Energy Selector at the Synchrotron 28
Gamma-Ray Scattering from Protons 28
Optical-Model Analysis of Nuclear Absorption Cross Sections for 4.2-Bev Negative Pions 28

Cloud Chamber Studies: Powell

Experiments with Diffusion Chamber 33
5-Bev π^--d Interactions 33
Experiments with Propane Chamber
Attempt to Observe θ_2^0 33
1.25-Bev π^-, K Collisions with Protons 34
Equipment and Techniques
12-Inch Propane Bubble Chamber 34
30-Inch Propane Bubble Chamber 34

Physics Research: Segrè

Antiproton Experiments 35
The Interactions of Positive K Mesons at Energies of 100 to 200 Mev 36
Example of a Positive $K_{\mu 2}$ Meson from an Antiproton Annihilation Star 36

Arc Research: Van Atta

High-Vacuum and Ultra-Low-Temperature Refrigeration . . . 37

ACCELERATOR OPERATION AND DEVELOPMENT

Bevatron 38

184-Inch Cyclotron
Modification 38

60-Inch Cyclotron
Development: Swivel Vacuum Seal 40
Operation 40

Linear Accelerator 42

Synchrotron
Research Program 43
Operation 44

PHYSICS DIVISION QUARTERLY REPORT

August, September, October 1956

Radiation Laboratory
University of California
Berkeley, California

November 20, 1956

GENERAL PHYSICS RESEARCH

PHYSICS RESEARCH

Luis W. Alvarez in charge

LIQUID HYDROGEN BUBBLE CHAMBERS

Luis W. Alvarez, J. Donald Gow, and group

10-Inch Chamber

The K^- capture experiment previously reported continued until the middle of August. At that time it was necessary to suspend operation owing to lack of hydrogen. The Cryogenic Laboratory found it necessary to replace certain equipment in the liquid hydrogen plant, a job which required a 7-week outage.

During the 7 weeks, the 10-inch chamber plumbing was cleaned up and a "graphic" valve panel was added. This period was also used to obtain much better field maps on the magnet, to improve the optical system, and to rebuild the electronic control rack. A new temperature control, using a sensitive differential pressure switch to control the heaters, and deriving the control signal from a vapor-pressure thermometer immersed in the chamber liquid, was added.

In mid-October, the K^- run was resumed, and the changes proved satisfactory. The vapor pressure method gives much closer temperature control than any other tried.

During the shutdown, two more vapor-pressure thermometers were installed in the chamber, one near the top and one near the bottom. These connect to a differential gauge, permitting measurement of the vertical temperature gradient in the chamber. Depending on operating conditions, we find differential temperatures from 0.2° to 0.4° C. A reduction in the expanded time reduces the differential. At present, the differential temperature increases as more beam passes through the chamber. These observations seem to confirm the accepted belief that the gradient is set up by bubbles which rise during the expanded time, carrying heat of vaporization with them.

4-Inch Chamber

The 4-inch chamber was made ready for a series of runs at the synchrotron and linear accelerator during the time liquid hydrogen was unavailable. A mylar window 0.007-in.-thick by 1 in. in diameter was installed, to permit the entrance of a high-energy x-ray beam with minimum production of electrons. The pulsed magnetic field coils were re-installed. Through most of October, the chamber operated well in the synchrotron beam. Experiments were done on pair production by x-rays on electrons. The chamber was also operated with sufficiently low sensitivity to discriminate against electron tracks while retaining sufficient sensitivity to permit observation of π^+ mesons and protons. The linac runs will begin in November.

New Chamber

Design has been begun on a liquid hydrogen chamber that will replace the present 10-inch chamber. This instrument will fit the same magnet and use the same external control system as the present one. It is to incorporate several features dictated by experience with the 10-inch chamber. Among these are: increased stereo angle, retrodirective illumination, variable heat leaks, and a faster expansion-recompression cycle. In addition, it will be of larger diameter, making better use of the available magnetic field volume. At present, it appears that a chamber 15 in. in diameter can be realized without changing the magnet geometry.

72-Inch Chamber

The 72-inch program is proceeding vigorously. The steel for the magnet has been cut and is being shipped to Berkeley. The coil winding is under way. A vacuum test has been completed on the vacuum tank and this tank is tight. The window has been cast and is in the annealing cycle. Minor design changes are being made in the chamber and expansion-line geometry to give a faster expansion-recompression cycle. Tests are being made to determine the best ways for minimizing temperature gradients in the liquid hydrogen.

DATA ANALYSIS

Hugh Bradner

The data analysis program is proceeding toward the goal of having fast semiautomatic scanning and reading equipment. Specifications for a fast reading system have been completed. A second new scanning table has been placed in operation. As a result of the film tests, panatomic-X (Eastman) has been selected for use in the 10-inch chamber cameras. Although relatively slow, this film offers much better contrast and resolution, which justifies its use.

A Goertz wide-angle lens (Dagor) of 7.5-in. focal length has been found acceptable for use in the cameras for the 72-inch chamber, and these are being ordered. Design on the 70-mm cameras has been begun.

A complete layout of the 90° prism retrodirective illumination system for the big chamber has been made.

LINEAR ACCELERATOR

James Donald Gow

The linear accelerator operated normally and well throughout the past quarter. The energy-control system previously tested is in routine operation and appears to give stabilization of the beam energy to approximately 1 part in 20,000. The Knowles experiment on B^9 states was completed. No major changes were made in the machine or in its accessory equipment during this period.

SEARCH FOR DIRAC MONOPOLES

Hugh Bradner and Luis W. Alvarez

If Dirac magnetic monopoles are formed by high-energy protons in Bevatron targets, they should gain several Bev in "falling" to the pole pieces in the magnetic field. They should then lose energy in matter at a rate of approximately 5000 times minimum.[1,2]

A special target and tongs have been made for inserting emulsions into the curved quadrant of the Bevatron through a small airlock in the straight section.

Ilford has kindly furnished special "G-minus", extremely insensitive emulsions.

Preliminary scanning of these emulsions has not revealed any monopoles.

---

[1] Willem R. Malkus, Phys. Rev. 83, 899 (1951).

[2] E. Bower, Cambridge Phil. Soc. 47, 777 (1951).

PARTICLE INTERACTIONS IN HYDROGEN

Frank S. Crawford, Jr., Lazar Goldzahl, Myron L. Good, M. Lynn Stevenson, and Harold K. Ticho

From about the beginning of September, we have been concerned with the preparation of a hydrogen bubble chamber run in a 1.5-Bev/c negative beam. Although interactions (especially associated production) due to incident pions will be of interest, we are primarily concerned with interactions of the K^- mesons and antiprotons. Of great interest are the reactions

$$K^- + p \rightarrow \Xi^- + K^+,$$

$$K^- + p \rightarrow \Xi^0 + K^0,$$

which are allowed by the strangeness rules. To distinguish K^- and p^- from the vastly more abundant pions, we have investigated the feasibility of various schemes of identification of the K-particle and antiproton tracks. We have decided on a "chronotron" type time-of-flight device to identify the particles, and a binary type hodoscope to locate the track in the bubble chamber once its existence is established by the chronotron. The required electronic apparatus has been constructed and is now being tested. We have also designed a special Fitch-type Cerenkov counter in which a sucrose solution is used as radiator, which should count only particles with β ranging from 0.85 to 0.97. Such a device has been constructed and is now being tested.

The beam that we plan to use is a modification of the Segrè group's beam. Calculations are in progress to determine the manner in which the beam should be modified to conform to our requirements of low flux but high momentum resolution.

DESTRUCTION OF STORED CYCLOTRON BEAM BY COULOMB COLLISIONS

Frank S. Crawford, Jr.

The storage of large amounts of circulating beam is of current interest in the design of some new types of accelerators. With a different motivation, beam-storage experiments were carried out in 1954 by Frank Crawford and Warren Stubbins. During those experiments, the rate of destruction of stored beam by gas scattering was measured for various storage radii. It was found that gas scattering caused the amount of stored circulating beam to decay exponentially as a function of time, with a mean life of a few seconds. No deviation from a simple exponential decay law was ever observed, although the decay of stored beam was often followed for more than two decades. This finding at first suggested that single catastrophic collisions were responsible, for it is well known that exponential decay laws usually represent "one-shot" processes. Consideration of possible single collision processes (nuclear scattering, Rutherford scattering, and electron pickup) showed that they all were too improbable

to account for the observed mean lives. A new calculation shows that a combination of small-angle multiple and single Coulomb collisions accounts quantitatively for the observed storage-lifetime data. The results of the calculation are contained in UCRL-3464,[3] which expresses the mean life of the stored beam as a function of the relevant parameters.

BEAM STORAGE IN THE 184-INCH CYCLOTRON

Frank S. Crawford, Jr.

The storage within a circular machine of a large number of particles, accumulated during many acceleration cycles, and their subsequent simultaneous removal would provide a decided advantage in some types of experiments. For example, in experiments using detectors that must be recycled, such as cloud chambers or bubble chambers, intense pulses of particles occurring at the recycling rate would often provide a distinct advantage over the more frequent normal output of a pulsed machine. In fact, this investigation was initiated in an effort to increase the yield of low-energy pions stopping in a liquid hydrogen bubble chamber.

How to achieve the piling up of bunches of beam particles, how to store them without undue loss, and how to recapture and remove them by the accelerating voltage constitute the problem. A study of the equations of motion of particles in a circular machine and of the factors that attenuate a circulating beam may enable one to learn the necessary conditions for storage and subsequent pickup. The problems of storage and pile-up (but not recapture, which was not attempted) are discussed in UCRL-3463.[4]

THE RELATIVISTIC CLOCK PARADOX

Frank S. Crawford, Jr.

An experiment to test the "clock paradox" prediction of relativity has been proposed in a recent UCRL report.[5] The experiment would involve π mesons produced by accelerators. The report then shows that the proposed experiment has already been carried out with cosmic-ray μ mesons through the four combined experiments of Rossi, Hilberry, and Hoag; Rasetti; Blackett; and Ticho. Their results verify the asymmetric aging predicted by relativity.

---

[3] Frank S. Crawford, Jr., Destruction of Stored Cyclotron Beam by Coulomb Scattering, UCRL-3464, July 1956.

[4] Frank S. Crawford, Jr. and Warren F. Stubbins, Beam Storage in the 184-Inch Cyclotron, UCRL-3463, July 1956.

[5] Frank S. Crawford, Jr., Experimental Verification of the "Clock Paradox" of Relativity, UCRL-3540 (Rev.) Oct. 1956.

μ-MESIC HYDROGEN ATOMS

Hugh Bradner

When negative μ mesons stop in the liquid hydrogen bubble chamber, we observe that the neutral μ-mesic atom travels distances as large as 2 mm before decaying to electron plus neutrinos. Rough calculations of mesic-atom mean free path, for thermal diffusion at 27°K, indicate that 1/2 mm distances are to be expected.

Data are being gathered on a large number of μ-e decays, to establish the distribution in diffusion distance for the neutral atoms.

STUDIES OF NEUTRAL K MESONS

Myron L. Good

A theoretical study of the particle-mixture aspect of the θ^0 meson has led to a simple relationship between the θ_1's regenerated by scattering, and the θ_1's regenerated in the unscattered beam. This is to be published soon. The results depend on the spin of the θ^0.

The above investigations also led to the prediction of a new phenomenon, which should occur if the θ^0-Meson has a nonzero spin and a magnetic moment: the passage of $\theta_2{}^0$ mesons through a magnetic field should convert them into $\theta_1{}^0$'s, which quickly decay. This phenomenon, if observed, would provide a measurement of the spin and magnetic moment of the θ^0 meson.

K^- INTERACTIONS IN LIQUID HYDROGEN

Luis W. Alvarez, Hugh Bradner, Paul Falk-Variant, J. Donald Gow, Arthur H. Rosenfeld, Frank T. Solmitz, and Robert D. Tripp

This experiment is still in progress; 150 K^- interactions have been observed. The findings thus far are given in a separate report,[6] the abstract of which is as follows:

> K^- mesons from the Bevatron have been stopped in a 10-inch hydrogen bubble chamber. The following reactions have been observed:
>
> 51 cases of $K^- + p \rightarrow \Sigma^- + \pi^+$,
> 27 cases of $K^- + p \rightarrow \Sigma^+ + \pi^-$,
> 14 cases of $K^- + p \rightarrow \Sigma^0 + \pi^0 (\Sigma^0 \rightarrow \Lambda + \gamma,\ \Lambda \rightarrow p + \pi^-)$,
> 7 cases of $K^- + p \rightarrow \Lambda + \pi^0 (\Lambda \rightarrow p + \pi^-)$.
>
> In addition there were 26 ± 10 K^- endings that gave no visible products.

---

[6] Alvarez, Bradner, Falk-Vairant, Gow, Rosenfeld, Solmitz, and Tripp, K^- Interactions in Hydrogen, UCRL-3583, Nov. 1956.

Three examples of the process

$$K^- + p \rightarrow \bar{\theta}^0 + n, \ \bar{\theta}^0 \rightarrow \pi^+ + \pi^-$$

were observed; at least one, and possibly all of these took place in flight. There were nine K^- interactions in flight three of them elastic scatters, and six which led to visible hyperons (4 Σ^-, 1 Σ^+, 1 Λ).

Fourteen Σ^+ decay into $\pi^+ + N$ and 14 into $\pi^0 + p$. Forty-eight Σ^- decay into $\pi^- + n$, the remaining seven Σ^- interact with protons (one in flight and six at the ends of their ranges). Two of the Σ^- interactions are identified as

$$\Sigma^- + p \rightarrow \Sigma^0 + n, \text{ two as } \Sigma^- + p \rightarrow \Lambda + n,$$

and three give no tracks in the chamber. The angular distribution of the $\Sigma^\pm$ decay products is somewhat anisotropic, suggesting a Σ spin $> 1/2$; there was no significant forward-backward asymmetry.

The measured mean lives are $T_{\Sigma^-} = (1.86 \pm 0.26)\times 10^{-10}$ sec., $T_{\Sigma^+} = (0.86 \pm 0.17)\times 10^{-10}$ sec., $T_{\Lambda} = (3.25 \pm 0.60)\times 10^{-10}$ sec.; there was no evidence for more than one lifetime for any of these hyperons.

Seventeen K^- mesons decayed in flight, four of them into three charged pions each.

PHYSICS RESEARCH

Walter H. Barkas, in charge

ENRICHED NEGATIVE K-MESON BEAM

Walter H. Barkas, Walter F. Dudziak, Peter C. Giles, Harry H. Heckman, Fred W. Inman, Conrad J. Mason, Norris A. Nichols, and Frances M. Smith

Much of the work of this quarter was devoted to preparing for and carrying out emulsion exposures to negative K mesons for our own use and for other laboratories. The exposures were made in an enriched K^--meson beam which we have developed. The particles were emitted in the forward direction from a target in the Bevatron northwest quadrant, and they were momentum-analyzed by the magnetic field of the Bevatron at its peak intensity. Particles of 430 Mev/c emerged from the machine radially and were focused by a quadrupole lens on a polystyrene degrader which reduces the K-meson momentum to 300 Mev/c while the accompanying pions are reduced in momentum to about 390 Mev/c. On emerging from the degrader the K mesons enter a large electromagnet that bends the beam horizontally through 180°, and also introduces vertical focusing. The pion beam is then completely separated from the K mesons, and the intensity emitted in the forward direction is such that it is possible to obtain about 10 K mesons in an emulsion stack for each pulse of the Bevatron. The running time is limited primarily by electrons and mu mesons which accompany the K mesons. A test stack of emulsion was exposed in lining up the beam, and the K mesons in this emulsion were studied while a larger stack was exposed and processed. A group of 1100 particle tracks was selected on the basis of grain density on entering the emulsion, and each track was followed until the particle interacted or decayed. More than 98% of the tracks selected were those of K^- mesons. A large number of interesting processes can be initiated by K^- particles, and many examples of interactions in flight with protons as well as with other nuclei were seen. Some are observed to decay, and in interactions both in flight and at rest, hyperons and hyperfragments are often produced. A number of fundamental measurements are possible on these events, and systematic observations are now in progress. The data are being coded on IBM data cards. Our large emulsion stack, in which are the tracks of perhaps 50,000 K^- mesons, is expected to yield very complete data. The density of all the emulsion has been carefully determined in order that quantitative energy measurements may be made.

ANTIPROTON ANNIHILATION PROCESS

Harry H. Heckman, Frances M. Smith, and Walter H. Barkas

In a second and better antiproton emulsion stack studied by us, 20 antiproton events have been found thus far. Of these, 8 interacted in flight and 12 came to rest before annihilation. The behavior of these events generally confirms the conclusions of the earlier study carried out by us and reported in cooperation with a number of other groups in The Antiproton-Nucleon Annihilation Process, UCRL-3520, Sept. 1956.

PHYSICS RESEARCH

Robert W. Birge in charge

K MESONS

Tau Mesons

Our τ-meson study was completed in this quarter. The results are summarized as follows: A total of 177 taus have been found by an unbiased scanning technique in three stacks, which were large enough so that geometric bias is negligible. These taus were obtained in exposures with the Kerth-Stork K-meson beam at the Bevatron. The conclusions of the study are (a) the tau mass is $966.5 \pm 0.74\ m_e$, (b) the spin-parity of the tau is incompatible with the θ.

This study is reported by Roy P. Haddock, Analysis of Bevatron Tau Mesons (thesis) UCRL-3580, Nov. 1956.

K-Meson Fluxes

The survey of K^+ intensities under various conditions has been completed and is to be reported at the Monterey meeting of the American Physical Society December 1956, by Leroy Kerth and Ludwig van Rossum, in UCRL-3547(Abstract), Nov. 1956, as follows:

> K^+ Production at Forward Angles by 6.2-Bev Protons on Copper.* L. van ROSSUM and L. T. KERTH, Radiation Laboratory, University of California, Berkeley, California. The characteristics of various 500-Mev/c K^+ beams from the Bevatron have been investigated with emulsion stacks. The table gives the estimated differential production cross sections per Cu nucleus for K^+ and the relative cross sections for π^+ and p^+. We include the corresponding figures for 90°.[1] All data have been reduced assuming a single mean life of 1.2×10^{-8} sec. The path length d from the target to the detector is given in Col. 7. Owing to uncertainties in the monitoring of the proton beam, the absolute cross sections may be in error by 70%. The errors given for $d\sigma_{\pi^+}/d\sigma_{K^+}$ and $d\sigma_{p^+}/d\sigma_{K^+}$ are standard deviations.

Prod. angle	Av. Prod. momentum (Mev/c)	$\frac{d\sigma_{K^+}}{d\omega\, dp}$ mb/(sterad x Mev/c)	$\frac{d\sigma_{K^+}}{d\omega\, dT}$ mb/(sterad x Mev/c)	$\left(\frac{d\sigma_{\pi^+}}{d\sigma_{K^+}}\right)_p$	$\left(\frac{d\sigma_{p^+}}{d\sigma_{K^+}}\right)_p$	d (cm)
0°	505	7.4	10	71 ± 21	28 ± 8	673
30°	520	3.4	4.7	34 ± 10	60 ± 18	691
60°	490	1.1	1.5	23 ± 7	87 ± 26	538
90°(1)	460	1.0	1.6	28 ± 11	300 ± 90	410

*This work was done under the auspices of the U. S. Atomic Energy Commission and supported in part by the National Academy of Sciences.

[1] F. S. Crawford, UCRL eng. Note 4310-03, M5 (Mean proton energy 5 Bev).

K-p Scattering

A counter experiment to determine the total cross section for K^+ particles on hydrogen was begun in this period. The K particles are identified by momentum (560 Mev/c) and β, and are scattered by carbon and polyethylene. At present this experiment is using the same production target as the antiproton setup.

Charge-Exchange Scattering

Preliminary tests are being conducted with a multiplate cloud chamber and counter control system to determine the feasibility of an experiment to investigate the decay of neutral K mesons produced by charge exchange of positive K particles. The preliminary work has included magnet studies to produce the K^+ beam, counter control tests, and tests of cloud chamber operation in synchronization with the Bevatron.

ANTIPROTONS

Scanning

Scanning is continuing on the stack obtained in the most recent p^- exposure; 12 p^-'s have been found.

Analysis

The results of recently completed work are to be issued as a report: Jack Sandweiss, On The Spin of K Mesons from the Analysis of Antiproton Annihilation in Nuclear Emulsion (thesis), UCRL-3577, Nov. 1956. The Abstract of the thesis is reproduced here:

> The antiproton-nucleon annihilation process has been shown to proceed primarily through pion production with occasional emission of K mesons. The fraction of stars yielding K-K pairs (conservation of "strangeness" is assumed) depends upon the spin, I, of the K mesons. A statistical-theory method has been developed for analyzing the annihilation data for information regarding the K mesons' spin. The theory employed is essentially that of Fermi; however, conservation of angular momentum has been included and the interaction volume is treated as an adjustable parameter. We find I = 0 most likely for the K mesons but, with present data, cannot exclude higher values. Under favorable circumstances this analysis may also yield information about the number of distinct types of K mesons. Various experimental tests have been devised to investigate the validity of the assumptions of the statistical-theory analysis. The existing data are consistent with the validity of these assumptions.

THEORETICAL GROUP

David L. Judd

A study has been made of the feasibility of extending the "conventional" design of alternating-gradient synchrotrons (e.g., the Brookhaven machine now under construction) into the 100-to 200-Bev range. If one retains the same magnet cross section as in the Brookhaven accelerator, but increases the length of magnets and straight sections in proportion to the square root of the radius of the machine, the various tolerances become more stringent--but only as the square root of the desired energy, at most. It looks possible, therefore, to consider machines of such a design, though it might be necessary to develop more elaborate correction schemes than are presently being contemplated by CERN or Brookhaven. An increase in absolute aperture, with attendant decrease in attainable magnetic gradient, would ease the tolerance on physical misalignment of magnets, but require relatively more radial space for phase oscillations. Thus, the extra cost of a larger aperture is not clearly justified. (Lloyd Smith)

We have examined the principles involved in the recently proposed storage rings for high-energy accelerators (G. K. O'Neill, Phys. Rev. 102, 1418 (1956)), and have come to the conclusion that it is not possible by means of foils, gas jets, or similar devices, to evade the consequences of Liouville's theorem, even though the additional forces are non-Hamiltonian in character. In particular, it is not possible to damp phase and betatron oscillations simultaneously, as would be required in the storage rings to retain protons while introducing others from the accelerator proper. (Lloyd Smith and David L. Judd)

Some work has been devoted to studying the proposals relating to new principles of particle acceleration that were put forward at the CERN high-energy accelerator conference in June 1956. A great deal of theoretical work must be done in order to assess the practical value of these proposals. (David L. Judd, Maurice Neuman, Stephen Gasiorowicz, and Sidney A. Bludman)

Work reported earlier on the theory of second- and third-order aberrations and fringing effects in a 180° double-focusing magnetic spectrometer has been extended and improved during this quarter, and the final results submitted and accepted for publication in the first issue of the new international journal "Nuclear Instruments," being published in Sweden. It is believed that this work makes possible the design and construction of such instruments with a resolution of 0.1% in energy and an acceptance of considerably greater than 0.01 steradian. The UCRL α-ray spectrometer of Asaro and Perlman, for which these calculations were made, already approaches this performance and should surpass it when additional known corrections are made in its field shape. (David L. Judd and Sidney A. Bludman)

The experimental results for the energy spectrum of low-energy neutrons (0 to 15 Mev) produced by the interaction of high-energy protons with heavy nuclei have been analyzed on the basis of the usual statistical model.[1] The effect of the varying excitation energy during the evaporation process and the initial distribution of excitation energy of the nucleus were taken into account, and it was found that the experimental results could be fitted very well. Unfortunately, however, the calculated results are not very sensitive to the assumed form of the initial distribution of nuclear excitation energy, which leads to a corresponding uncertainty in the value of the constant in the formula relating temperature of the excited nucleus to the excitation energy; $E = \lambda T^2$. The value of λ obtained in fitting the data is $\lambda = \frac{A}{10}$, where A is the mass number; the factor 10 is uncertain by about 20%. Also, it can only be assumed correct for large excitation energies. (Warren Heckrotte)

The cross section for the high-energy (p, d) pickup reaction on carbon has been calculated, with consideration given to the interaction of the proton with all the nucleons in the nucleus as opposed to the usual Born approximation treatment that considers the interaction with the picked-up neutron only. The interaction was treated semiempirically by using compatible elastic proton-scattering data for carbon targets. This method results in the scattering of the proton into intermediate momentum states before pickup, which enhances the wide-angle scattering over the usual Born-approximation treatment. It was found that the experimental angular distributions[2] could be fitted best with a nuclear momentum-density distribution of the form exp(-E/14), with E in Mev. (Kenneth R. Greider)

The optical model of neutron scattering (Feshbach, Porter, and Weisskopf, Phys. Rev. 96, 448 (1954)) seems to give poor agreement with experiment in the vicinity of the rare earth elements. One might suppose that the discrepancy arises from the fact that these nuclei give evidence of being quite nonspherical in shape (Bohr and Mottleson, Dan. Mat. Phys. Medd. 27, No. 16 (1953)). Calculations have been carried out to determine the effect of including spheroidal distortions within the framework of the optical model. It appears that the inclusion of such distortions can improve the agreement with experiment. Details of this calculation will be submitted for publication within the next few days. (Jack L. Uretsky)

---

1 Edward Gross, The Absolute Yield of Low-Energy Neutrons from 190-Mev Proton Bombardment of Gold, Silver, Nickel, Aluminum, and Carbon (Thesis), UCRL-3330, Feb. 1956.

2 Walter Selove, Phys. Rev. 101, 231 (1956).

The ground state of Se^{79} is assumed to be given by a $(g\ 9/2)^3$ configuration coupling to a total spin of J = 7/2. Calculations by Flowers and Talmi have shown that it is not possible to couple the $(g\ 9/2)^3$ configuration to obtain this spin by means of any simple scalar or spin-dependent two-body interaction. In detail, what happens is that as the range of the two-body force is varied from zero to infinity the levels corresponding to the J values 9/2, 7/2, 5/2 behave in the following way,

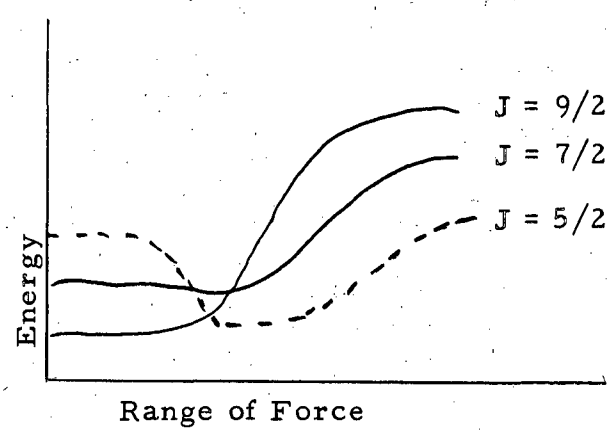

so that the 7/2 state never lies lowest. The rapid crossing of the 5/2 and 7/2 state is interpreted as indicating that the 5/2 wave function is more sensitive to high-momentum components in the interaction than is the wave function for the 7/2 state. In order to suppress this behavior one might introduce a two-body interaction which depends explicitly upon the relative momenta. Accordingly, calculations are being carried out with such a two-body interaction. (Jack L. Uretsky, in collaboration with Robert D. Lawson)

Both V^{51} and Mn^{55} are characterized by proton configurations $(f\ 7/2)^{\pm 3}$, where ± indicates holes or particles. Any simple two-body interaction among the protons would be expected to give the same ground state for each nucleus. In fact, however, the ground-state spins for V^{51} and Mn^{55} are known to be 7/2 and 5/2, respectively. The essential difference between V^{51} and Mn^{55} lies in the nature of the neutron configurations: in vanadium the neutron shell is closed, whereas in manganese there are two neutrons lying outside the closed shell. A straightforward shell-model calculation is under way to attempt to determine whether a simple two-body interaction, including the interaction with the neutrons, can give the correct results. An alternative way of looking at the problem is by means of the distorted-well formalism of Nielsen (Dan. Mat. Fys. Medd. 29, No. 16, (1955)), which, it should be emphasized, should not be valid for these nuclei. The procedure that is followed is to put the nucleons into the levels of a potential well according to the Pauli principle and then to minimize the energy of the system as a function of the (constant

volume) spheroidal distortion of the well. When this is done for vanadium, it turns out that the "equilibrium" deformation is identically zero, and if the interaction among the three extra protons is of very short range one obtains a ground-state spin of 7/2, consistent with experiment. For Mn^{55}, on the other hand, the equilibrium deformation is not zero and one finds that the Nielsen formalism give the correct spin, magnetic moment, and quadrupole moment with a high degree of accuracy. It has already been indicated that this is an unexpected result. The purpose of the present computational program is to attempt to relate this result to the usual shell-model formalism. (Jack L. Uretsky, in collaboration with Robert D. Lawson)

Many authors, including the present one, have studied solutions of Schroedinger's equation for various potentials of spheroidal symmetry. If one requires also that the potential be of short range and finite depth the problem becomes nearly insuperable because then the Schroedinger equation is usually nonseparable. There is one such potential for which the Schroedinger equation does separate, although this potential has the disadvantage that its depth is a function of angle. One might expect that the lowest eigenvalues, which are important for nuclear ground-state calculations, might not be too sensitive to the angular variations. Mr. Jonathan Young is programming the solutions of the Schroedinger equation for this potential in order to test the validity of this assumption. (Jack L. Uretsky)

A calculation of the self-consistent solutions for the platinum atom has been started on the Livermore IBM 704 computer. This is a continuation of a survey of the atomic structure of heavy atoms. A routine for the accurate calculation of the differences in binding energies of individual electrons, which makes use of these self-consistent solutions, is being set up. Since all sizable contributions to the energy differences other than that due to the Lamb shift are included in this calculation, the discrepancy between the calculated $2P_{3/2}$ - 1S difference and the experimental results will be attributed to the Lamb shift in the 1S state. The discrepancy between the calculated and experimental results of the $2P_{1/2}$ - $2P_{3/2}$ difference will give some measure of the nuclear size as discussed by Christy and Keller, Phys. Rev. 61, 147 (1942). (Stanley Cohen)

The fixed-source method used by Chew in the treatment of pion-nucleon scattering has been applied to the scattering of K^+ particles by nucleons. The recoil effects may be included by an extension of the method, but this work has not been completed. In the no-recoil approximation two mechanisms have been treated. In the first the K^+ particles interact directly with the nucleons, and in the second the force is transmitted by π mesons. Angular distributions and energy dependences are derived. The very limited data seem to favor a direct γ_5 interaction between the K^+ and the baryons. A coupling constant considerably larger than that needed in Born approximation is indicated. (Henry P. Stapp)

The possibility of distinguishing between the single-particle and parity-doublet interpretations of strange-particle behavior by means of charge-exchange scattering of beams of neutral K particles has been investigated. If the scattering is invariant under time reversal and is

charge-independent, the ratio of $K^+_{3\pi}$ to $K^+_{2\pi}$ in either the forward or the backward elastically scattered beams must be four times that obtained in ordinary K beams, i.e., those for which the K particles are initially charged. (Henry P. Stapp)

The impulse-approximation treatment of the scattering and polarization of deuterons by carbon has been extended to include the effects of the deuteron D state and the effects of the simultaneous scattering of the two particles of the deuteron. These effects are now being evaluated by machine computations. (Henry P. Stapp)

The scattering of photons of 100 to 200 Mev from protons and deuterons has been examined in a model in which it is assumed that only electric and magnetic dipole photons scatter. Two dispersion relations derived by Gell-Mann, Goldberger, and Thirring, and the analysis of photopion production from nucleons by Watson, Keck, Tollestrop, and Walker, are used to guide the theoretical prediction of differential scattering cross sections. Several approximations are made, including the impulse approximation in the case of photon-deuteron scattering; the accuracy of these approximations is estimated. In this model the photon-proton cross section and the sum of the elastic and inelastic photon-deuteron cross sections are largest at backward scattering angles. (Richard H. Capps)

An attempt is being made to see whether the dispersion relations together with the unitarity condition uniquely determine the scattering amplitude in a nonrelativistic potential-well problem. It has so far been shown that for potentials for which the behavior of the S-wave phase shift is of the form

$$k \cot \delta = P(k^2),$$

where P is a polynomial, there is no uniqueness. However, such potentials have redundant poles, and it is not clear that such relatively "long-ranged" potentials lead to scattering amplitudes obeying the dispersion relations. This problem is of interest as an indication whether it is likely that the recently suggested formulations of relativistic field theories in terms of dispersion relations contain all the useful information contained in the Hamiltonian. (Stephen Gasiorowicz, in collaboration with Malvin Ruderman)

Two members of the group were requested by the sponsors of the International Congress of Theoretical Physics, held in Seattle in September 1956, to serve as editors of that portion of the proceedings of the conference relating to field theory and strange particles. They attended the conference, supervised the recording of the addresses, and are now preparing this material for publication in the Reviews of Modern Physics (April 1957). (Stephen Gasiorowicz and Richard H. Capps)

Work is continuing on the problem of the possible implications of the apparent parity paradox of the τ - θ decay. (Sidney A. Bludman, in collaboratory with Malvin Ruderman)

An analysis of some strange-particle reactions in terms of the isotopic spin states through which they proceed has been carried out. This leads to some interesting results. For weak interactions the decay rates of particles of different charge are in general not related. Some relation may be found, however, if it is assumed that they decay by the emission of a "spurion," i.e., a fictitious particle with isotopic spin S. The lifetime ratio

$$\tau_{\Sigma^+}/\tau_{\Sigma^-}$$

has been compared with the transition ratio

$$\frac{\Sigma^+ \rightarrow p + \pi^0}{\Sigma^+ \rightarrow n + \pi^+}$$

under the assumption that a spurion of isotopic spin $S = 1/2$ is absorbed by the Σ. A comparison with Dr. Alvarez' data indicates that if this mechanism is assumed one gets a larger contribution from the $I = 1/2$ state than from the $I = 3/2$ state, in spite of the expected dominance of the $I = 3/2$ state in the region considered. A similar study can be applied to the K^0 and K^+ decays. In this case an admixture of about 10% of a spurion with $S = 3/2$ is sufficient to explain the data. (Tsuneyuki Kotani)

For the strong interactions, in which a strangeness quantum number is conserved, the process of capture of K mesons by hydrogen has been studied. Here the predominance of the $I = 0$ state is evident; however, the interference effect between states of $I = 1$ and $I = 0$ is not so small. Thus, it may be necessary to consider such an interference effect for the scattering of K mesons by nucleons. Although the statistics of the experimental results are not yet sufficient to yield a reliable conclusion, one can put a limit on the ratio of the charge-exchange scattering to the direct scattering. (Tsuneyuki Kotani)

The Coulomb interference effect for K-nucleon scattering has also been studied. The analyses of the recent scattering data indicate a repulsive potential for K-meson–nucleon interaction. Until now, it has been believed that this potential is an attractive one. However, a firm conclusion can be obtained only after more reliable data are available. (Tsuneyuki Kotani)

Work is continuing on a review article on statistical models for very-high-energy nuclear interactions. (Joseph V. Lepore and Maurice Neuman)

A calculation of single and double meson production in proton-proton collisions up to 2 Bev has been completed. The calculation has been based on a model of an intermediate state involving the excitation of one or both of the nucleons to an isobaric state of spin and isotopic spin 3/2. Two striking features of the experiments--the marked preference for emission of mesons with kinetic energies of 100 to 200 Mev, and the sharp increase in double production processes above 1 Bev--seem to be reproduced. This work is described in detail in a doctoral thesis now being prepared. (Saul Barshay)

Computations of single-particle binding states in a spheroidal nuclear potential, described in previous progress reports, have been completed. A doctoral thesis containing these calculations and several applications to various properties of deformed nuclei has been prepared.[3] (Marvin Rich)

It has been shown that if three or more different spinor fields interact with each other via Yukawa-type interactions, the assumption that they commute with one another is incompatible with the requirement that the Hamiltonian density commute with itself at two points on a spacelike surface. If the Hamiltonian contains only two different spinor fields, they may be assumed to either commute or anticommute without violating the above requirement. Some speculations concerning the apparent distinction between the cases of two and three or more interacting spinor fields are made. An abbreviated account of this work has been submitted to the Physical Review. In addition, a preliminary survey of the strong interactions of K mesons and hyperons is almost completed. The calculations have been done on the assumption that these strong interactions are of the Yukawa type and are charge-independent. Both of the foregoing two topics are fully discussed in a doctoral thesis now being prepared. (Richard Spitzer)

The production of charged Σ mesons in the bombardment of hydrogen in a bubble chamber by K^- mesons is being investigated. (Owen Eldridge)

An expansion in almost periodic functions has been developed for the solution of the time-dependent Schrodinger equation. The application of this series to the problem of an electron in a crystal lattice is being considered. (Frank Halpern)

The mesic corrections to the absorption rate of π^- mesons by deuterium are being calculated. (Frank Halpern)

During the past quarter the mathematical staff of the theoretical group has been occupied as follows:

A program has been prepared to compute (Ax, x), where A is an arbitrary matrix of order less than twenty-one and x is a vector. (James Baker for Marvin Rich of the Theoretical Group)

A study is being made to determine the best techniques of transcribing data from nuclear emulsion experiments for analysis on an automatic computing machine. (James A. Baker for the Barkas Emulsion Group)

Progress has been made on the development of a program for the IBM type 701 to calculate the inelastic scattering cross section of nucleons on heavy nuclei, using an impulse approximation and Monte Carlo techniques and taking the Pauli exclusion principle into account. (Tom Clements for Lester Winsberg of the Nuclear Chemistry Group)

---

[3] Marvin Rich, Single-Particle States in a Spheroidal Nuclear Potential (Thesis), UCRL-3587, Nov. 1956.

A calculation has been made to identify the event and give probability of correct identification of Λ and θ decays in a diffusion cloud chamber experiment. (Michael Lourié for Baxter Armstrong of the Cloud Chamber Group)

A program has been written to fit nuclear radii to measured absorption cross sections. The computations of radii have been performed under two different assumptions about the nucleon density in a nucleus, namely, a tapered density function and a uniform distribution. Also, several different values of the elementary total cross section in a nucleus were used. (Marjory Simmons for Fred Wikner of the Moyer Physics Group)

A program to integrate three simultaneous second-order differential equations has been developed and applied to the determination of orbits in the 184-inch cyclotron. (Kent Curtis for Warren Stubbins of the 184-inch Cyclotron Group)

A program has been developed to compute kinematical quantities of interest in either elastic or inelastic two-body scattering. The quantities computed include the energies, momenta, scattering angles, and solid-angle transformations associated with both incoming and both outgoing particles for the barycentric and the laboratory systems. The results are presented as tables with the incident energy and the scattering angle of one of the particles in the laboratory system as independent variables. (Kent Curtis for the Bubble Chamber Group)

A new program has been developed to supplement the original bubble chamber data-processing program. This program analyzes each event by constructing the orientation and geometry of each prong in space. The input for this program is the direct output of the original program. The output of the new program includes the dip or elevation angle, the azimuthal angle, and the included angle between a number of predetermined prongs. (Charles Stableford for the Bubble Chamber Group)

A revised edition of the Beverly Hill Willis report on high-energy particle data has been completed; an appendix has been added which includes tables of densities, physical constants, and a graph of radiation length vs atomic number. (Charles Stableford and Marjory Simmons for the Information Division)

A program to calculate solutions of the equations of motion of charged particles in the magnetic field of the Bevatron was completed. (Victor Brady for the Cloud Chamber Group)

Solutions of the equations of motion of charged particles in the magnetic field of the cyclotron were calculated by use of the differential analyzer. (Victor Brady for Warren Stubbins of the 184-inch Cyclotron Group)

Computations were made in connection with the design of a K-meson spectrometer. Solutions were constructed for the differential equation of

motion of high-energy particles in an electrostatic field by the use of an electronic analogue computer. The probabilities of particle separation by mass for various apertures were determined. (Jonathan Young for Joseph Murray of the Bevatron Group)

PHYSICS RESEARCH

Edward J. Lofgren in charge

THE K^- MASS AND THE MASS OF THE Σ^- HYPERON

Warren W. Chupp and Sulamith Goldhaber*

During the course of systematic nucleon emulsion studies of K^- mesons, five events have been observed which we interpreted as the absorption of a slow K^- meson in hydrogen.[1] We have reported earlier[2] on four of these events. At that time it was possible to proceed only to the point of stating that if the K^- mesons involved possess a unique mass, then the Σ^- hyperon is heavier than the Σ^+ hyperon by about 14 m_e.

The reactions with which we are concerned are

$$K^- + p \rightarrow \Sigma^+ + \pi^- + Q_1, \qquad (1)$$

$$K^- + p \rightarrow \Sigma^- + \pi^+ + Q_2. \qquad (2)$$

An improved value of the Σ^+ mass has recently been determined by Fry et al.[3] Their value, $M_{\Sigma^+} = 2327.4 \pm 1.0\ m_e$, was obtained by measuring the energy release in the decay scheme

$$\Sigma^+ \rightarrow p + \pi^0 + Q.$$

Using this datum and Reaction (1) we have determined Q_1 from the measured Σ^+ range and the application of conservation of momentum between Σ^+ and π^-. Two events of the type of Eq. (1) give the following results:

$R_{\Sigma^+} = 806 \pm 13\mu$,	$R_{\Sigma^+} = 805 \pm 23\mu$;
$Q_1 = 103.3 \pm 0.7$ Mev,	$Q_1 = 103.2 \pm 1.2$ Mev;
$M_{K^-} = 966.2 \pm 1.7\ m_e$,	$M_{K^-} = 966.0 \pm 2.6\ m_e$.

The weighted mean of these two measurements yields the values $Q = 103.24 \pm 0.60$ and $M_{K^-} = 966.1 \pm 1.6\ m_e$. The uncertainties included in the estimated error are the Bohr straggling of the Σ^+ range, observational

---

* This work was carried out in collaboration with Professor Gerson Goldhaber and F. H. Webb.

1 Three of these events were observed by us in Berkeley. One was observed at MIT-Harvard by A. Pevsner, D. Ritson, and M. Widgoff, and we are grateful to them for making their unpublished data available to us. One further event observed at MIT-Harvard can now be interpreted as giving rise to a Σ^+ decaying in flight.

2 W. W. Chupp, G. Goldhaber, S. Goldhaber, and F. H. Webb, Interactions of Negative K Particles at Rest, UCRL-3044, June 1955; K^- Interactions at Rest (paper presented at Pisa Conference, June 1955; Sulamith Goldhaber, Production and Interaction of Heavy Mesons and Hyperons (paper presented at Rochester Conference, April, 1956), VI-1.

3 W. F. Fry, J. Schneps, G. Snow, and M. S. Swami, Phys. Rev. 103, 226 (1956).

errors in the range measurements, 5% uncertainty in the emulsion shrinkage factor, and the uncertainties in the Σ^+ and π^- masses. This measured value of the K^- mass was used to determine the Σ^- mass from Reaction (2).

The resulting data are

$$R_{\Sigma^-} = 694 \pm 22\mu, \qquad R_{\Sigma^-} = 688 \pm 10\mu;$$

$$M_{\Sigma^-} = 2339.8 \pm 3.0\ m_e, \qquad M_{\Sigma^-} = 2340.8 \pm 1.6\ m_e;$$

and the weighted averages

$$\bar{R}_{\Sigma^-} = 688.8 \pm 9.4, \qquad \bar{M}_{\Sigma^-} = 2340.6 \pm 1.3\ m_e.$$

Including now the K^- mass uncertainty, we have

$$M_{\Sigma^-} = 2340.5 \pm 1.9\ m_e.$$

Using Fry's value of $M_{\Sigma^+} = 2327.4 \pm 1.0\ m_e$, we get

$$M_{\Sigma^-} - M_{\Sigma^+} = 13.2 \pm 2.2\ m_e.$$

Using our data alone, we compute the mass difference

$$M_{\Sigma^-} - M_{\Sigma^+} = Q_1 - Q_2 = 13.7 \pm 1.8\ m_e,$$

which serves as a self-consistency check of our data. In this case, the mass difference of the hyperons is quite insensitive to the K^- mass and the stopping power of the emulsion, and the error is reduced because the uncertainty in the K^- mass does not enter.

The best mass values that can be given at present are obtained by two similar events found recently by Fry et al.[4]

They are

$$M_{K^-} = 966.2 \pm 1.4\ m_e,$$

$$M_{\Sigma^+} = 2327.4 \pm 1\ m_e, \quad \text{(Fry et al.)}$$

$$M_{\Sigma^-} = 2341.5 \pm 1.5\ m_e,$$

$$M_{\Sigma^-} - M_{\Sigma^+} = 14.3 \pm 1.5\ m_e.$$

---

[4] W. F. Fry, J. Schneps, G. A. Snow, M. S. Swami, and D. C. Wold, Phys. Rev. 104, 270 (1956).

ANTIPROTON AND ANTINEUTRON EXPERIMENTS

Bruce Cork, Glen R. Lambertson, Oreste Piccioni, and William A. Wenzel

The measured cross sections for antiprotons on several elements, as recently determined in Bevatron experiments, are listed in Table I. The cross section for carbon was measured by letting the antiprotons be incident on a toluene liquid scintillator, observing the pulse height due to the interactions, and selecting the inelastic collisions. The inelastic cross section for carbon is observed to be approximately twice the elastic cross section.

For determining the inelastic cross section for lead, five wafers 0.5 in. thick were inserted in the liquid scintillator. We selected inelastic events by observing the pulse height produced in the liquid scintillator. This method is quite effective in selecting inelastic events.

Table I

Cross sections for antiproton interactions

T (Mev)	Z	σ_{inel} (mb)	σ_{total} (mb)
190	H		135 ± 16
300	H		104 ± 14
300	C	568 ± 100	670 ± 120
500	H		97 ± 4
500	Be		484 ± 60
700	H		94 ± 4
700	Be		425 ± 50
700	C	462 ± 50	665 ± 60
660	Pb	2270 ± 400	

The total cross section for 0.9-Bev/c K^- mesons was measured in hydrogen and observed to be 55 ± 9 millibarns. Corrections and probable errors are being calculated. A paper is being prepared for the Physical Review.

Our article, Antineutrons Produced from Antiprotons in Charge-Exchange Collisions (UCRL-3533, Sept. 1956), has been submitted as a letter to the editor of the Physical Review.

Also, an abstract--Total Proton-Antiproton Cross Section at 700, 500, 300, and 190 Mev Kinetic Energy (UCRL-3563 (Abstract), Oct. 1956)--has been submitted for the Christmas meeting of the American Physical Society at Monterey.

REPORT ISSUED

A paper by Bruce Cork and William A. Wenzel at the Radiation Laboratory, University of California, Berkeley, and C. W. Causey, Jr., at the United States Naval Postgraduate School, Monterey, California, entitled "Elastic Proton-Proton Scattering at 2.24, 4.40, and 6.15 Bev," has been issued as UCRL-3548 (Abstract), Oct. 1956.

PHYSICS RESEARCH

Burton J. Moyer in charge

NUCLEAR ABSORPTION OF μ MESONS

Selig N. Kaplan

The collection of data for the determination of neutron multiplicities is still in progress. The average neutron multiplicity for lead was determined to be

$$\bar{\nu}_{Pb} = 1.41 \pm 14.$$

This answer is still subject to a small target-out correction. Incomplete data for silver give

$$\bar{\nu}_{Ag} = 1.40 \pm 17.$$

In view of the discrepancy between our results and those of other experiments (i.e., Widgoff, Phys. Rev. 90, 891 (1953) gives

$$\bar{\nu}_{Pb} = 2.14 \pm .13),$$

and because the other results are normalized to a RaBe neutron spectrum and ours to a fission spectrum, we are now making measurements of the relative neutron density as a function of distance in paraffin for a RaBe source and a mock fission source.

NEUTRON SPECTRUM AND YIELD FROM PROTON BOMBARDMENT OF ISOTOPES OF IRON AND NICKEL

Hoyt A. Bostick and Harold Adelson

A program has been initiated for the study of the energy spectrum and yield of neutrons from selected isotopes of iron and nickel bombarded by 32-Mev protons. Foils of other elements will also be bombarded in an investigation of the (p, n) reaction. This work, to be performed at the proton linear accelerator, will involve use of a 4-inch liquid hydrogen bubble chamber as a neutron detector by the analysis of photographs of recoil proton tracks. Electromagnetically separated isotopes Fe^{54}, Fe^{56}, Ni^{58}, Ni^{60}, Ni^{62} have been supplied by the Oak Ridge National Laboratory in the form of oxides and are undergoing reduction to allow thin-target fabrication.

A proton-beam monitor of the induction electrode type sensitive to single 500-μsec pulses of beam has been developed in order to facilitate beam-intensity measurements required for the analysis of the bubble chamber pictures. The experimental work is expected to begin early in November.

PHOTON ENERGY SELECTOR AT THE SYNCHROTRON

Robert J. Cence

An attempt has been made to reduce the background seen by the counter being developed to select high-energy photons at the synchrotron by the use of a lead-plastic shield. A composition was necessary so as to eliminate eddy-current heating, becuase the shield projects into the synchrotron guide field. No eddy-current heating was observed. This first design, however, failed to provide adequate shielding.

Recently the dE/dx multiple range counter developed by Dwight Dixon has been used to observe high-energy pi mesons, protons, and deuterons produced at 90° by 340-Mev bremsstrahlung on carbon. Other targets will be bombarded in the near future.

GAMMA-RAY SCATTERING FROM PROTONS

Larry L. Higgins

Analysis of the film data pertaining to an experiment at the synchrotron, to measure the differential cross section at 90° of photons scattering by protons, has been completed. These data provide information extending from 40 to 130 Mev gamma-ray energy, and the cross section computed from them indicates within rather large statistics that the cross section is constant with energy. However, the data are uniformly about 40% greater than the Thompson scattering cross section, which is well outside the statistical errors in the measurements. As the cross section for photon energies that are very much less than the rest-mass energy of the proton is expected to be the Thompson value, the observed discrepancy is disturbing. A study of possible explanations due to experimental technique is being made. A complete report concerning all phases of this present experiment is being compiled.

OPTICAL-MODEL ANALYSIS OF NUCLEAR ABSORPTION CROSS SECTIONS FOR 4.2-Bev NEGATIVE PIONS

N. Frederick Wikner

The cross sections obtained when high-energy particles are scattered from nuclei can yield information concerning the size and the gross features of the interior of nuclei, when analyzed in terms of the transparent or "optical" model of Fernbach, Serber, and Taylor.[1] This analysis becomes quite simple at very high energies because the semi-classical picture of independent nucleons in the nucleus is more nearly valid, and because the experiments yield absorption cross sections directly. This latter fact allows one to use only a portion of the optical-model formalism and, in addition, requires the choice of only one unknown

---

[1] Fernbach, Serber, and Taylor, Phys. Rev. 75, 1352 (1949).

parameter--the average pion-nucleon cross section in a nucleus. Now it is generally believed that at these high energies this cross section, denoted $\bar{\sigma}$, is very close in value to the free pion-proton or pion-neutron cross section. Any reduction in this value due to effects of nuclear binding, which inhibits those collisions involving small momentum transfers, is very small, since the pion-proton cross section is mainly inelastic (75%).[2] (This portion of the cross section involves large momentum transfers.[3]) Only those elastic collisions in the forward direction ($\theta < 2^{\circ}$) are affected by the exclusion principle; momentum transfers here are small. No quantitative calculation concerned with determining the proper value to use for $\bar{\sigma}$ has yet been done at these high energies,[4] therefore the sensitivity of the optical-model calculations to the parameter $\bar{\sigma}$ will be investigated.

The pion cross sections that were measured are not sufficient to determine the form of the nuclear density distribution, $\rho(r)$. The typical calculation in the past has assumed a uniform distribution of nucleons in a nucleus;[1] however, the results of electromagnetic experiments have shown that the charge distribution in nuclei has a shape such as that shown in Fig. 1, where we see a density distribution having a uniform central region which then falls smoothly to zero. The distance for falling from 90% to 10% is essentially a constant for all nuclei and has a value

$$\Delta r_{90-10} \approx 2.3 \times 10^{-13} \text{ cm.}^{5}$$

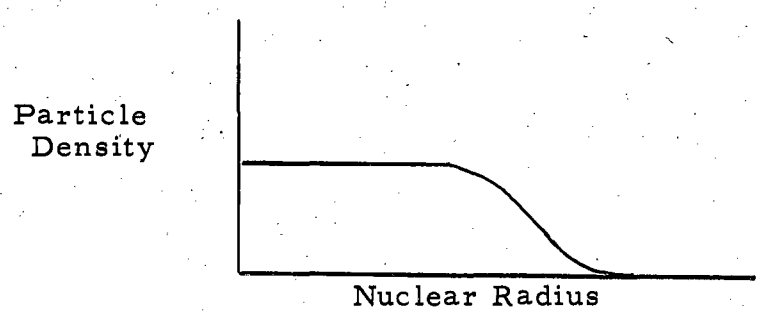

Fig. 1. Shape of nucleon-density distribution in nuclei according to electromagnetic experiments.

---

[2] George Maenchen, private communication.

[3] See the report of the Sixth Annual Rochester Conference on High-Energy Physics (Interscience, New York, 1956).

[4] This investigation has been done only for 90-Mev neutrons by M. L. Goldberger, Phys. Rev. 74, 1268 (1948); and at 400 Mev by Bernardini, Booth, and Lindenbaum, Phys. Rev. 88, 1017 (1952).

[5] R. Hoftstadter, Revs. Modern Phys. 28, 214 (1956).

Our interest is mainly in the value we will obtain for the nuclear radius from an optical-model analysis using a density distribution of the above shape. In order to compare our results with the results obtained in years gone by, a uniform density will also be used.

The pion wave is attenuated exponentially as it passes through the nucleus with an absorption coefficient $K(r) = \rho(r)\bar{\sigma}$, where $\rho(r)$ is the nucleon density in the nucleus and $\bar{\sigma}$ is the average pion-nucleon cross section in a nucleus. With coordinates defined as in Fig. 2 the total attenuation is obtained by an integral over s, the coordinate along the pion trajectory, and the cross section is then the probability of interaction integrated over the impact parameter b.

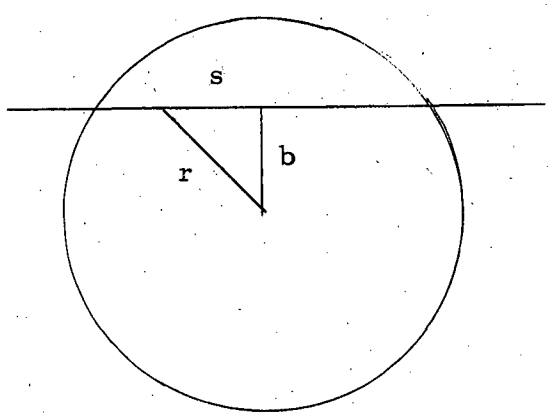

Fig. 2. Coordinates used in determining attenuation of a pion wave.

Thus we have

$$\sigma_a = \int_0^\infty \{ 1-\exp [- \int_{-\infty}^{\infty} K((s^2+b^2)^{1/2}) \, s] \} \, 2\pi \, b \, d \, b.$$

For a uniform density we have

$$\rho(r) = \frac{A}{4/3 \, \pi \, R^3} ,$$

where A is the atomic number and R is the nuclear radius. For tapered density distribution in Fig. 1, $\rho(r)$ will have the form[6]

$$\rho(r) = \rho_0 \, f \, (\frac{r}{Q}),$$

[6] R. W. Williams, Phys. Rev. 98, 1387 (1955).

where

$$\rho(r) = \rho_0, \qquad r \leq Q,$$

$$\rho(r) = \rho_0\left(\frac{2r^3}{Q^3} - \frac{9r^2}{Q^2} + \frac{12r}{Q} - 4\right) \qquad Q \leq r \leq 2Q,$$

$$\rho(r) = 0, \qquad r \geq 2Q.$$

The radius parameter Q for any nucleus is given by $Q = a\,A^{1/3}$, where a is a constant to be determined. Then we have

$$\rho_0 = 1/a^3 v,$$

where v is a volume normalization coefficient and has the following value for the particular $f(r/Q)$ defined above,

$$v \equiv \int_0^\infty f(x)\ 4\pi x^2 dx = 24\pi/5.$$

From a plot of the opacity,

$$O = \sigma a/_{\pi Q^2} = \sigma a/_{\pi a^2 A^{2/3}} \quad \text{vs}$$

$$(K_0 R)^{-1} = va^2/\bar{\sigma}\ A^{1/3},$$

one can determine a value for a and thus a nuclear radius R. Then, following Ford and Hill,[7] we can quote our results in terms of the radius of the <u>uniform</u> density distribution, which yields the same

$$\langle r^2 \rangle_{av}.$$

This is determined from the following simple relation:[7]

$$R = r_0 A^{1/3} = \left[\frac{5}{3}\ \langle r^2 \rangle_{av}\right]^{1/2}.$$

The calculations are still in progress and to date have yielded the following result.

Using the following absorption cross sections (all values in millibarns),

Be	=	177 ± 10,
C	=	218 ± 7,
Al	=	407 ± 10,
Cu	=	725 ± 25,
Pb[8]	=	1780 ± 90,

---

[7] K. W. Ford and D. L. Hill, Phys. Rev. 94, 1630 (1954); D. L. Hill and K. W. Ford, Phys. Rev. 94, 1617 (1954).

and $\bar{\sigma}$ = 28 mb, we have found

$$a = 0.750 \times 10^{-13} \text{ cm},$$

which results in

$$R = 1.22\ A^{1/3} \times 10^{-13} \text{ cm}.$$

(This expression for R is a tapered-model calculation expressing the result in terms of the equivalent uniform density distribution.)

This value or r_0 is in quite good agreement with the analysis by Williams[6] of the 1.4-Bev neutron-scattering experiments by Coor, Hill, Hornyak, Smith, and Snow,[8] and also with the electromagnetic measurements of the charge distribution.[5]

The calculational program is just beginning, and when finished will yield the variation in the value of R with $\bar{\sigma}$; results for R will be obtained for the case of a uniform density, here also as a function of $\bar{\sigma}$.

---

[8] Coor, Hill, Hornyak, Smith, and Snow, Phys. Rev. 98, 1369 (1955).

CLOUD CHAMBER STUDIES

Wilson M. Powell in charge

Experiments with Diffusion Chamber

Analysis of previously obtained data is continuing. Three abstracts have been submitted for the Monterey Meeting of the American Physical Society, as follows:

1. π^--Proton Interactions at 5 Bev by George Maenchen, W. B. Fowler, and Wilson Powell, UCRL-3555, Abstract, Oct. 1956.

2. Proton - Proton Interactions at 5.3 Bev, by Robert Wright, Wilson Powell, George Maenchen, and W. B. Fowler, UCRL-3554, Abstract, Oct. 1956.

3. Meson Production in n-p Collisions at Bevatron Energies, by Fred Holmquist, William Fowler, and Wilson Powell, UCRL-3556, Abstract, Oct. 1956.

5-Bev π^--d INTERACTIONS

Robert Good and John Schonle

Preparation for a survey experiment similar to the previous diffusion chamber experiments has been started. This experiment is to use 5-Bev pions on deuterium. This will yield a direct comparison with the 5-Bev π^--p experiment that is close to being completely analyzed, and by subtraction should show the qualitative features of π^--n reactions.

Experiments with Propane Chamber

ATTEMPT TO OBSERVE θ^0_2

Twenty-four thousand pictures were taken of the 12-inch propane bubble chamber during this quarter in an attempt to observe the theoretically predicted θ^0_2 meson. A beam of 1.25-Bev/c π^- mesons was focused on a 4-by-4-by-12-in. Al producer. Neutral particles emitted from the producer at an angle of 5° with respect to the π^- beam traveled 9.3 ft to the chamber, operated in a 12-kilogauss magnetic field. A magnet swept charged particles from this beam. A total of 360,000,000 pions struck the Al producer. Preliminary analysis shows 10 possible Ω^0 hyperons and eight possible θ^0_1 meson decays in the chamber. Investigation of possible sources of background is in progress.

An abstract, the K^0 Meson as a Particle Mixture, by Richard Lander, William Fowler, and Wilson Powell, UCRL-3553(Abstract), Oct. 1956, has been submitted for the Monterey Meeting of the American Physical Society.

1.25-Bev π^-, K^- COLLISIONS WITH PROTONS

A thousand pictures have so far been taken of 1.25-Bev/c π^- mesons traversing the propane bubble chamber.

Separation between hydrogen and carbon events presents the most difficult problem in interpretation of these pictures. However, as has been demonstrated by Steinberger, this problem is easily solved in unstable-particle production by charged mesons in which only two particles are produced in the final state. In this film and in additional film to be taken we propose to look at

$$\pi^- + p \rightarrow \Omega^0 + \theta^0$$
$$\rightarrow \Sigma^- + K^+$$
$$\rightarrow \Sigma^0 + \theta^0,$$

and

$$K^- + p \rightarrow K^- + p$$
$$\rightarrow \bar{\theta}^0 + n$$
$$\rightarrow \Xi^- + K^+$$
$$\rightarrow \Xi^0 + \theta^0.$$

Equipment and Techniques

12-INCH PROPANE BUBBLE CHAMBER

Larry Oswald, John Elliott, and Wilson Powell

For some experiments it is desirable to have more material for the interaction of particles than is available in the propane. Therefore a quarter-inch tungsten plate has been mounted in the propane bubble chamber and a test will be made to see if this plate interferes with the normal operation of the chamber.

30-INCH PROPANE BUBBLE CHAMBER

Wilson Powell and group

Design studies continued during this quarter. A more detailed cost estimate was prepared.

PHYSICS RESEARCH

Emilio Segrè in charge

ANTIPROTON EXPERIMENTS

We are in the process of performing an antiproton run with a new spectrograph. This instrument is about 20 times as luminous as the first spectrograph with which the antiproton was discovered. It gives about 0.3 antiproton usable for study for every 10^{10} protons impinging on the Bevatron target.

The studies started with this instrument are

(a) n-p^- and p-p^- cross sections as a difference between D_2O, H_2O, and O_2. Annihilation and scattering cross sections are measured separately.

(b) Annihilation and scattering cross sections for lead (possibly also to be undertaken for other elements).

(c) The excitation function of the antiproton on carbon and CH_4, in order to obtain some quantitative data, and--if possible--to collect information on the antiproton production in p-p^- collisions.

(d) An exploration for particles of mass between 1000 and 3000 electron masses.

(e) Antineutron production by charge exchange.

(f) A photographic exposure with a beam of antiprotons separated at least partially from the mesons. This should be obtained by changing the relative momentum of n^- and p^- at the first focus of our spectrograph by the use of a hydrogen moderator.

We will carry this program as far as possible within the allotted Bevatron time.

The emulsion stacks irradiated in the antiproton beam last December and distributed in this laboratory and to Rome have now been completely analyzed by the several groups. The results--35 stars--are reported in The Antiproton-Nucleon Annihilation Process (Antiproton Collaboration Experiment), UCRL-3520, Sept. 1956.

THE INTERACTIONS OF POSITIVE K MESONS AT ENERGIES OF 100 TO 200 Mev*

Joseph E. Lannutti, Warren W. Chupp,
Gerson Goldhaber, and Sulamith Goldhaber

In continuing our study of K-meson interactions with complex nuclei,[1] we recently exposed a stack of nuclear emulsions to a separated positive K-meson beam[2] of momentum 430 to 500 Mev/c. To date we have followed about 15 meters of positive K-meson track in the energy region 200 to 100 Mev. In this path length, 30 inelastic scattering events were found. Within the present limited statistics the mean free path in nuclear emulsions (~50 cm) is shorter than the value found at lower energies (~95 cm).[1] In this work all elastic scatters above 2° were recorded and will be compared with similar data for negative K mesons.

EXAMPLE OF A POSITIVE $K_{\mu 2}$ MESON FROM AN ANTIPROTON ANNIHILATION STAR*

Gerson Goldhaber and Louis R. Jauneau†

In the study of antiproton annihilation stars in photographic emulsions[3] evidence has been presented from multiple scattering and grain-counting measurements for the emission of K mesons in about 10% of the stars. We have now found an annihilation star at rest, Number 3-25, emitting one black prong (A) and one grey prong (B). Particle B comes to rest in the stack after a range of 3.87 cm and then emits a near-minimum secondary (B'). The secondary, B', emitted at a 43° dip angle, traverses 147 plates (11.2 cm) and then leaves the stack. Gap coefficient measurements on the track B gives $g/g_{min} = 2.38 \pm 0.23$ and combined with the residual range this yields a mass of $740 \pm 130\ m_e$ where the statistical error is quoted. Grain counts on the secondary (B') give $g/g_{min} = 1.06 \pm 0.04$ near the decay point and $g/g_{min} = 1.11 \pm 0.04$ after traversing 8 cm.

Surface-angle measurements[3] on the secondary track (B') near the decay point give $p\beta = 270 \pm 100$ Mev/c.

We conclude from these observations that particle B produced in the antiproton annihilation is most probably a positive $K_{\mu 2}$ meson.

---

* Abstract of report for presentation at the Monterey meeting of the American Physical Society, December 1956.

† National Council Fellow under I.C.A. grant.

1 Lannutti, Chupp, Goldhaber, Goldhaber, Helmy, Iloff, Pevsner, and Ritson, Phys. Rev. 101, 1617 (1956).

2 Exposure in conjunction with Dr. Donald H. Stork.

3 "The Antiproton-Nucleon Annihilation Process." Barkas, Birge, Chupp, Ekspong, Goldhaber, Goldhaber, Heckman, Perkins, Sandweiss, Segrè, Smith, Stork, Van Rossum, Amaldi, Baroni, Castagnoli, Franzinetti, and Manfredini, UCRL-3520, Sept. 1956; also Phys. Rev. (To be published).

ARC RESEARCH

Chester M. Van Atta in charge

HIGH-VACUUM AND ULTRA-LOW-TEMPERATURE REFRIGERATION

Hugh R. Smith

The preceding quarterly report described additions made to a 32-inch mercury diffusion pump for the control of pump-fluid backstreaming. The same principles have since been applied in modifying 6-inch and 4-inch diffusion pumps of both mercury and oil types. Although only semiquantitative data have been taken as yet, the results so far are as follows:

1. The addition of a water-cooled crown over the top nozzle hood of a 6-inch oil diffusion pump (MCF-700) decreased the backstreaming of oil vapor through the pump opening by about 95%. A cold vapor trap was used to measure the quantity of backstreaming with and without the hood in place. Most of the remaining backstreaming seems to originate on the barrel wall at the vapor condensation interface. No attempt was made to measure any effect on pump speed.

2. A 4-inch mercury diffusion pump (MHG-180) was fitted with a refrigerated cold crown (-36°F) over the top nozzle hood. This feature, in conjunction with a refrigerated barrel (also at -36°F) resulted in the attainment of a base pressure of 6×10^{-9} mm Hg in an all-metal mass-spectrometer vacuum system.

Similar modifications are being made on a 4-inch oil diffusion pump (MCF-300). This pump will be operated with both the barrel and the crown refrigerated down to as low as -75°F in an attempt to evaluate the expected effect on the base pressure of the pump.

The first of the low-temperature refrigeration systems has been in operation in the Heavy Ion Accelerator for approximately 6 weeks. This unit maintains the baffle of the 32-inch mercury diffusion pump on the prestripper tank at between -180°F and -190°F. The steady operation brought out what is hoped to be the last of the operating difficulties. This is due to a very slow build-up of ice in the cold sections of the system (-100°F to -150°F) just preceding the baffle expansion valve. This eventually results in clogging of the valve and, of course, warming up of the baffle. More complete drying of the refrigerants during charging, down to a dew point corresponding to or below system operating temperatures, has corrected this trouble.

ACCELERATOR OPERATION AND DEVELOPMENT

BEVATRON

Edward J. Lofgren in charge

OPERATION

A report for August, September, October 1956 is to be issued separately under the title "Bevatron Operation and Development. XI."

184-INCH CYCLOTRON

Robert L. Thornton in charge

MODIFICATION

Richard Burleigh

It was originally planned to install the deflected beam system during the present shutdown. It became apparent, however, that this would result in considerable delay in putting the machine into operation, as the final design of the deflecting system depends on rather complete knowledge of the field and therefore could not be started until the magnet shimming and measurements were essentially complete. It was therefore decided to complete the machine at this time without the deflecting system, thereby allowing the design and construction of the deflecting system to proceed concurrently with the installation and trial runs of the rf system. It is planned that near the beginning of next year the machine will again be shut down for the installation of the deflecting system and the final reshimming and measurement of the field.

The following work on the modification has been finished during this quarter:

1. Continued magnet measurements and shimming including the following (this concludes this phase of the work for this shut-down):

   1.1 Reshimming of entire pole.

   1.2 Installation of pole-tip bolt shims.

   1.3 Installation of pole pump-out shims.

   1.4 Installation of auxiliary shims at periphery of pole.

   1.5 Installation of filler pieces for ion source slot.

2. Vacuum testing.

3. Installation of auxiliary-coil access doors.

4. Installation of pole liners.

5. Fabrication of internal and external transmission lines.

6. Continued testing of blade controls.

7. Removal of temporary vacuum barrier between capacitor vacuum tank and dee tank.

8. Installation of movable-panel limit switches.

9. Installation of permanent stators.

10. Installation of scatterer target in dee.

11. Installation of platforms.

12. Fabrication of dee voltmeters.

13. Fabrication of meson windows.

Work is in progress on the following items:

1. Installation of dee.

2. Installation of transmission lines.

3. Design of steering magnet (copper received, steel contracted for, coil winding out for bids).

4. Design of deflecting system.

5. Installation of meson windows.

6. Minor design revisions to 4-inch quadrupole.

7. Design of remote position indicator for movable panels.

8. Revisions of "old" ion source to suit modification.

9. Revisions of "old" main probe to suit modification.

60-INCH CYCLOTRON

Joseph G. Hamilton in charge

DEVELOPMENT: SWIVEL VACUUM SEAL

Charles Corum and William B. Jones

Crocker Laboratory 60-inch Cyclotron Group has developed a new multipurpose device that permits wide-angle access to continuously evacuated systems. At present the device is used for installing, removing, and positioning our vertical feelers. It has been used for access for the removal of debris from the tank floor. A broom has been fabricated for sweeping up small flakes and scale. The shaft has a removable head so that a variety of tools can be used with the same seal plate.

The swivel seal-plate unit consists of a sphere with a tubular extension, retained between two lucite rings with beveled inner surfaces. The seal plate is made of lucite, both for visibility and for ease in machining. An O ring is positioned about the pivot axis of the sphere to effect the vacuum seal.

An O ring inside the sphere forms the vacuum seal for the in-and-out motion of the tool being used. The conical movement of about 50° allowed by the present unit gives more than ample flexibility (see Fig. 1).

OPERATION

Summary of operations as prepared by Peter McWalters for this quarter:

Alpha bombardments	650.2 hr
Deuteron bombardments	173.0 hr
Proton bombardments	89.9 hr
Beryllium bombardments	222.8 hr
Lithium bombardments	17.0 hr
Experimental bombardments	27.4 hr
Operational total	1180.3 hr
Outage time	124.6 hr
Available time	1304.9 hr
Shutdown	871.1
Holidays	32.0 hr
	2208.0 hr

An operating efficiency of 90.3% was maintained throughout this quarterly period.

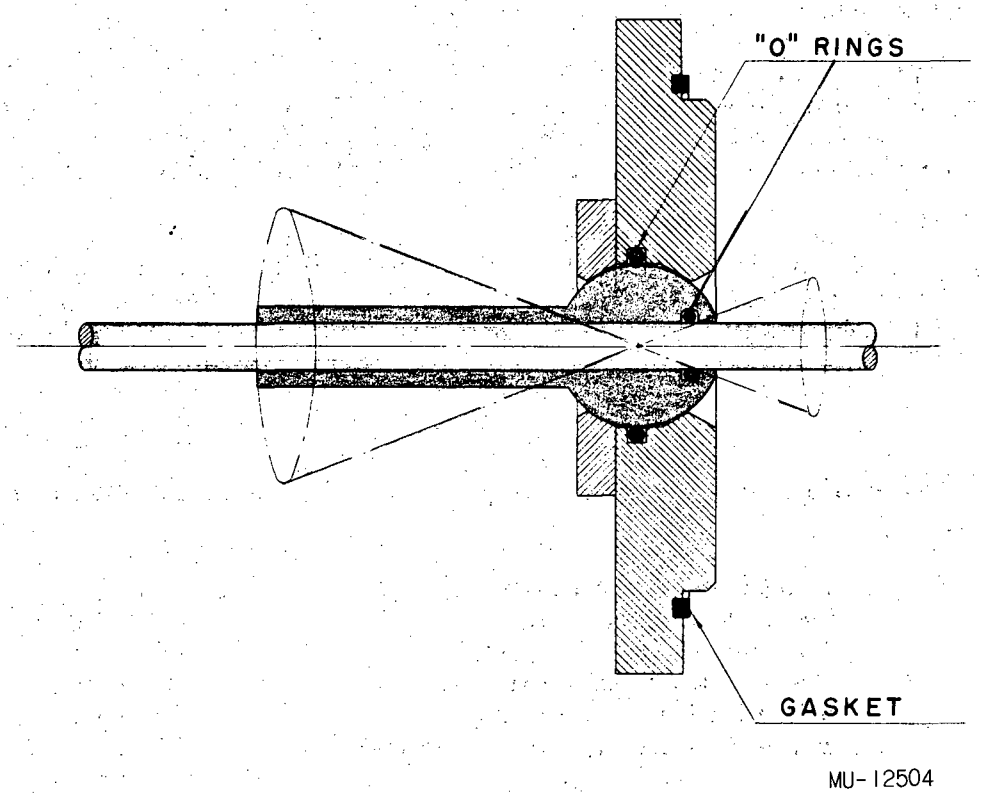

Fig. 1. Swivel seal-plate unit for use with cyclotron vacuum system.

LINEAR ACCELERATOR

James Donald Gow in charge

~~Material for this section had not been received at the time of publication, but may be expected in a subsequent report.~~

See p. 6.

SYNCHROTRON

Edwin M. McMillan in charge

RESEARCH PROGRAM

Robert W. Kenney

Robert Kenney, Edward Knapp, and Victor Perez-Mendez have completed the testing of counters and shielding geometries that will be used in determining $d\sigma/d\Omega$ for the reaction $\gamma + p \rightarrow \pi^+ + n$ in the angular range between 0° and 45° in the laboratory system. A liquid hydrogen target in a magnetic field has been completed and will be used to observe pion photoproduction from both liquid hydrogen and liquid deuterium. The data will provide a test of the Chew-Low theory and will yield information on the proton spin flip in pion photoproduction.

William Imhof, Edward Knapp, and Victor Perez-Mendez have extended their observations of the z dependence of π^+ photoproduction to 46- and 65-Mev pions in the angular range from 45° to 150° (lab) and to 95- and 125-Mev pions in the range from 90° to 135°. Carbon, copper, silver and lead were observed, and the angular distributions were found to be quite flat. These data bear upon the photoproduction model and, under certain assumptions, yield a value of 1.3×10^{-13} cm for the pion mean free path in nuclear matter. The results will shortly appear in report form, and an abstract has been submitted for the Christmas meeting of the American Physical Society.

Robert Cence has employed a multiple counter telescope to identify photopions, protons, and deuterons from carbon at 90^o(lab). This apparatus will be used to study the proton and deuteron spectra from various elements in an effort to determine internal momentum distribution.

Duane Gates, Robert Kenney, and William Swanson, with John Anderson, Thomas Jenkins, and Charles McDonald of Livermore, used the 4-inch hydrogen bubble chamber, which was provided and operated by the bubble chamber group, to observe the production of electron triplets in hydrogen. Both neutral and charged photopion production were also seen. Twenty-eight thousand stereo pictures were taken. The scanning of the film has begun, and emphasis is being placed upon the large momentum-transfer case in triplet production and upon the forward angles and low energies in pion production. An abstract has been submitted for the Christmas meeting of the American Physical Society.

OPERATION

Rudin M. Johnson

The synchrotron was run entirely for physics research experiments during this period. The beam was run at peak energy for all experiments. The beam intensity was a maximum of 5×10^{-8} electrons per pulse and fairly steady except when running for the 4-inch H_2 bubble chamber. When running for the bubble chamber, the beam intensity and pulse rate were reduced so as not to saturate the chamber.

A magnetic pulsed inflector coil is being designed to be used for injecting beam with the 2-Mev linac.

A second 100-kv injector gun mount has been made and will be installed adjacent to the present injector. Thus another point will be available for injection.

A synchrotron injector gun has run in the machine for more than two months, with a record total of 782 hours of good beam.

The linac No. 2 has been used for chemistry experiments by Drs. Lemmon, Hirshberg, and Lindblom in Dr. Calvin's group. Choline derivatives at liquid nitrogen temperatures were studied.

An experiment to polymerize ethylene trichloride was run by Futrell and Newton.

The radiation shield vault design for linac No. 2 has been completed by Plant Engineering. Heavy aggregate ballast blocks from Mare Island will be used for the shield walls.

Information Division
12-13-56 sa