UCRL 3654

UNIVERSITY OF CALIFORNIA

Radiation Laboratory

TWO-WEEK LOAN COPY

This is a Library Circulating Copy which may be borrowed for two weeks. For a personal retention copy, call Tech. Info. Division, Ext. 5545

BERKELEY, CALIFORNIA

DISCLAIMER

This document was prepared as an account of work sponsored by the United States Government. While this document is believed to contain correct information, neither the United States Government nor any agency thereof, nor the Regents of the University of California, nor any of their employees, makes any warranty, express or implied, or assumes any legal responsibility for the accuracy, completeness, or usefulness of any information, apparatus, product, or process disclosed, or represents that its use would not infringe privately owned rights. Reference herein to any specific commercial product, process, or service by its trade name, trademark, manufacturer, or otherwise, does not necessarily constitute or imply its endorsement, recommendation, or favoring by the United States Government or any agency thereof, or the Regents of the University of California. The views and opinions of authors expressed herein do not necessarily state or reflect those of the United States Government or any agency thereof or the Regents of the University of California.

UCRL-3331

UNIVERSITY OF CALIFORNIA

Radiation Laboratory
Berkeley, California

Contract No. W-7405-eng-48

LIFETIME AND HYDROGEN CROSS SECTION OF K^- MESONS

Bruce Cork, Glen R. Lambertson, Oreste Piccioni, and William Wenzel

January 30, 1957

Printed for the U.S. Atomic Energy Commission

LIFETIME AND HYDROGEN CROSS SECTION OF K^- MESONS

Bruce Cork, Glen R. Lambertson, Oreste Piccioni,* and William Wenzel

Radiation Laboratory
University of California
Berkeley, California

January 30, 1957

In the course of experiments requiring the detection of antiprotons in a negative external beam from the Bevatron,[1,2] it was found that K^- mesons also could be distinguished from the large background of lighter charged particles, primarily π^- mesons. Particles of a fixed momentum emitted in the forward direction from an internal beryllium target were channeled by a series of focusing quadrupole magnets for a distance of 100 feet from the target. In this beam, particles of a given mass were identified by velocity. The momentum was defined by the internal magnetic field of the Bevatron and an external deflecting magnet; velocity was measured by time-of-flight coincidence of six scintillation counters approximately equally spaced over the last 60 feet of the beam channel.

With particles of momentum of 0.9 Bev/c, the lengths of the delay cables on the time-of-flight coincidence counters were adjusted to produce a coincidence with particles of a selected velocity. Figure 1 shows the counting rate obtained for delays in a velocity range including particles of K^- meson mass. The presence of K^- mesons in the beam is clearly indicated. From the slope of the delay curve on either side of the "plateau" we estimate an upper limit of 5% for the contamination of the K^- beam when the delays are set for the edge of the plateau.

In order to measure the K^- - p total cross section, a 62-inch long liquid hydrogen target was located after the last scintillator, F, of the time-of-flight selection system, Fig. 2. Beyond this, at a distance of 13.4 feet from F, a 13-inch-diameter scintillation counter, L, detected those particles which passed through the hydrogen target without interaction or decay. This counter was large enough to include the effects of the natural beam divergence and of the multiple Coulomb scattering in the hydrogen target.

---

* On leave from Brookhaven National Laboratory.

In principle, the change in transmission resulting from filling the hydrogen target is a measure of the total cross section; several corrections must be considered in this calculation, however. A large fraction of the K^- mesons (approximately 40%) decays in the interval from F to L. Decay secondaries that originate in the region ahead of the hydrogen target are only slightly attenuated in the hydrogen, and since only about 1% of these secondaries are detected by L, the net effect of decay ahead of the target is negligible in the transmission difference. In the region after the target, the rate of decay of K^- mesons is increased by the energy loss in the hydrogen when the target is full. The apparent decrease in transmission from this cause requires a calculated correction of 6% in the cross section. Charged secondaries from interacting K's could occasionally be detected by L; this effect is small because of the "good" geometry of L and the relatively low center-of-mass velocity in the $K^- - p$ interaction. The correction to the cross section required by this effect is estimated to be about 1%, and has been neglected.

After correction for the difference in decay in flight between the target and L, the value of the $K^- - p$ cross section computed from the observed transmissions is

$$\sigma_T = 52 \pm 9 \text{ mb.}$$

The indicated error is statistical only. Using the measured $\pi^- - p$ cross section,[3] we compute that a 5% contamination of the beam by π^- mesons would require that this value be increased by 1 mb. The correction for forward scattering[4] into counter L is less than 1 mb and has been neglected.

The K^- lifetime may to a first approximation be calculated from the observed transmission t_0 measured by L with no hydrogen in the target, i.e.,

$$t_0 = e^{-d/\lambda},$$

where d is the separation of counters F and L, and λ is the mean decay distance related to the mean life τ by

$$\lambda = c\tau \frac{Pc}{Mc^2},$$

where c is the velocity of light and P and M are the momentum and the mass,

respectively, of the K^- meson. Several corrections are necessary. Because the empty hydrogen target was in place during the measurement, a correction must be made for attenuation in the windows and insulation of the target. This factor had been measured for antiprotons, for which the transmission was 0.90. Taking into account the relatively larger cross section for the interaction of antiprotons in matter at this momentum,[2] we estimate the transmission for K^- mesons of the empty target at 0.95 ± 0.02. Counters L and F will detect the K^- decay products with a probability that depends on the kinematics of the decay and the position along the beam where the decay occurs. Since Counter L is larger than Counter F, this correction is equivalent to a reduction of the effective value of d. With the assumption that the decay modes are the same for the K^- and the K^+ meson,[5] we compute a correction for this effect of 9% to the counting rate of L and 3% to the rate of F. Therefore, we have made a net correction of -6% to the observed transmission. The uncertainty in the mean life from counting statistics is $\pm$ 13%, and an additional uncertainty of $^{+0}_{-6}$% comes from the possible contamination due to π^- mesons. The uncertainty in the K^- momentum contributes $\pm$ 5%. Combining the uncertainties, we find for the mean life of the K^- meson

$$\tau = 14.9 \; ^{+2.2}_{-2.4} \times 10^{-9} \text{ second.}$$

Hoff et al.[6] obtain $9.5 \; ^{+3.6}_{-2.5} \times 10^{-9}$ sec, and a later measurement[7] gives $10.2 \; ^{+3.1}_{-1.9} \times 10^{-9}$ sec for the mean lifetime of the K^- meson measured in emulsion experiments performed at a distance of one to two mean lives from the target. Because our experiment was performed at a distance of four mean lives from the target, our greater value for the measured mean life is in the direction expected if there is a long-life component in the K^- decay. However, the uncertainties are such that both K^- lifetime measurements are consistent with a single value for the K^- lifetime of 12 or 13×10^{-9} sec, or about the same as that obtained for the K^+ lifetime.[8,9]

From the measured K^- mean lifetime and the observed yield (Fig. 1) of K^- mesons relative to π's at Counter F, we find that the ratio of K^- mesons to π^- mesons produced with momentum 0.9 Bev/c in the forward direction by 6-Bev protons on a 6-inch beryllium target is about 1 to 150.

LEGENDS

Fig. 1. Delay curve of time-of-flight selector at 0.9 Bev/c. Calculated delays for π^- mesons, K^- mesons, and antiprotons are shown on the horizontal axis. Coincidence C_1C_2 is made between the outputs of the two threefold coincidence circuits.

Fig. 2. Geometry of attenuation experiment with liquid hydrogen target.

FOOTNOTES

1. Cork, Lambertson, Piccioni, and Wenzel, Phys. Rev. 104, 1193 (1956).
2. Cork, Lambertson, Piccioni, and Wenzel, Cross Sections of Antiprotons in Hydrogen, Beryllium, Carbon, and Lead, UCRL-3650, Jan. 1957; and to be published.
3. Cool, Piccioni, Clark, Phys. Rev. 103, 1082 (1956).
4. Bethe and de Hoffman, Mesons and Fields, Vol. II (Row-Peterson, Evanston, Ill., 1955), p. 76.
5. Birge, Perkins, Peterson, Stork, and Whitehead, Nuovo Cimento 4, 834 (1956).
6. Iloff, Goldhaber, Goldhaber, Lannutti, Gilbert, Violet, White, Fournet, Pevsner, Ritson, and Widgoff, Phys. Rev. 102, 927 (1956).
7. Chupp, Goldhaber, Goldhaber, and Lannutti (private communication).
8. Fitch and Motley, Phys. Rev. 101, 496 (1956).
9. Alvarez, Crawford, Good, and Stevenson, Phys. Rev. 101, 503 (1956), and private communication: mean lifetime of $K^+_{\mu 2} = 12.4 \pm 0.2 \times 10^{-9}$ sec.

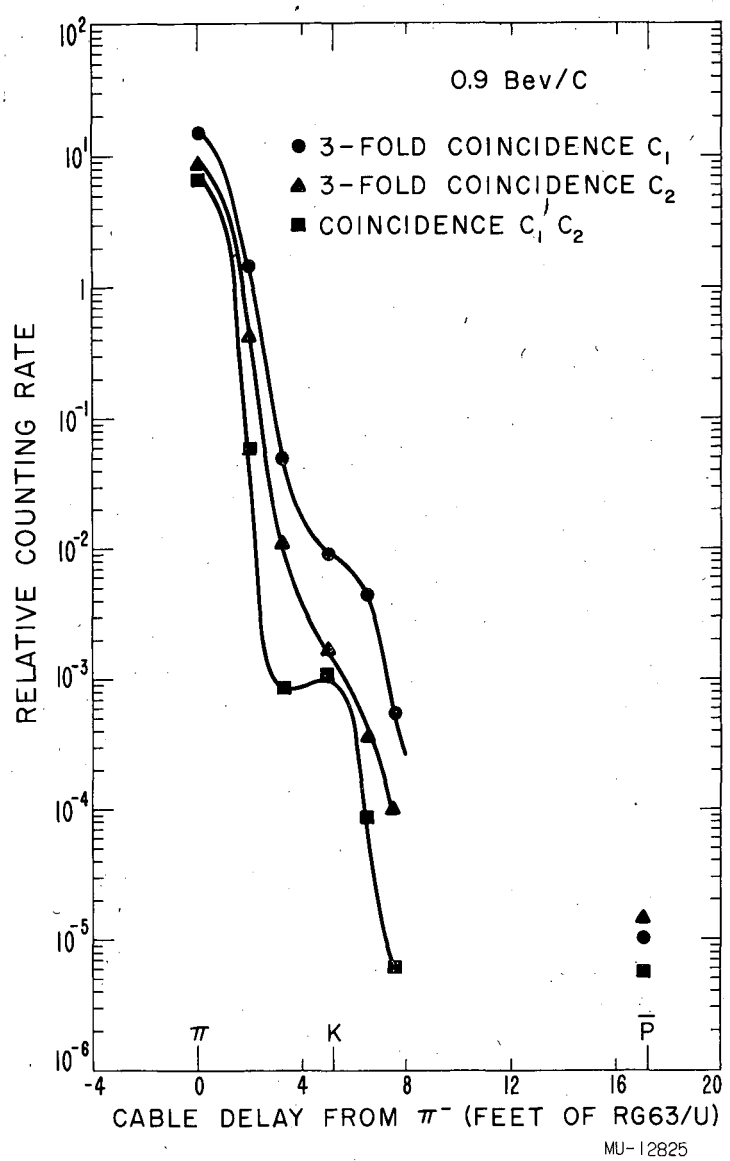
0.9 Bev/C
● 3-FOLD COINCIDENCE C_1
▲ 3-FOLD COINCIDENCE C_2
■ COINCIDENCE $C_1 C_2$
RELATIVE COUNTING RATE
10^2
10^1
1
10^{-1}
10^{-2}
10^{-3}
10^{-4}
10^{-5}
10^{-6}
π
K
$\bar{P}$
-4
0
4
8
12
16
20
CABLE DELAY FROM π^- (FEET OF RG63/U)
MU-12825

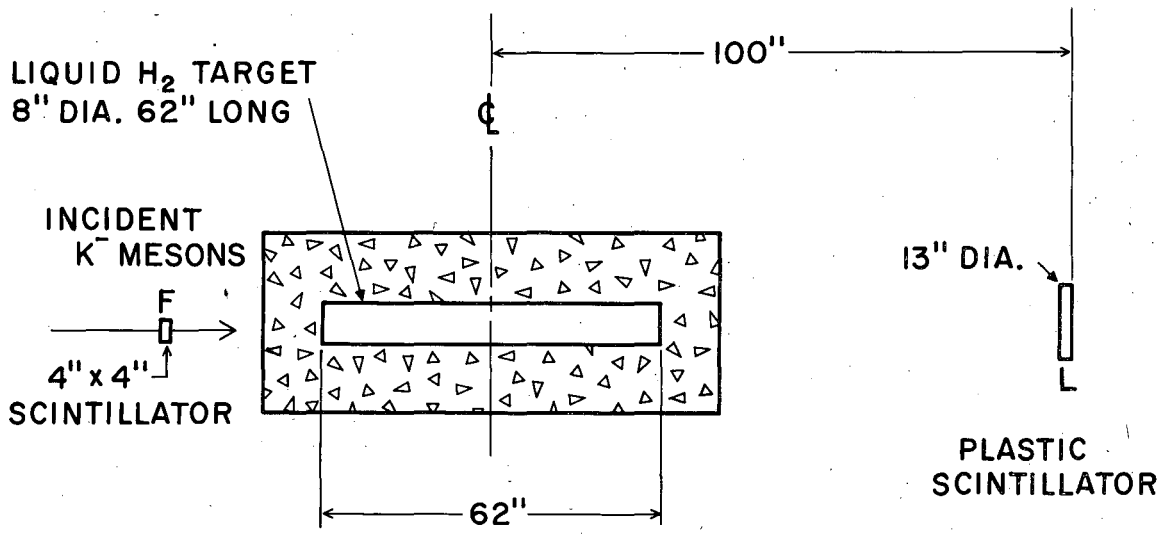
LIQUID H_2 TARGET
8" DIA. 62" LONG
100"
℄
INCIDENT
K^- MESONS
F
4" x 4"
SCINTILLATOR
13" DIA.
L
PLASTIC
SCINTILLATOR
62"

MU-12826