UCRL 3656

UNIVERSITY OF
CALIFORNIA

Radiation Laboratory

DIRECTION OF POLARIZATION PRODUCED BY QUASI-ELASTIC SCATTERING OF 315-Mev PROTONS

BERKELEY, CALIFORNIA

TWO-WEEK LOAN COPY
This is a Library Circulating Copy
which may be borrowed for two weeks.
For a personal retention copy, call
Tech. Info. Division, Ext. 5545

DISCLAIMER

This document was prepared as an account of work sponsored by the United States Government. While this document is believed to contain correct information, neither the United States Government nor any agency thereof, nor the Regents of the University of California, nor any of their employees, makes any warranty, express or implied, or assumes any legal responsibility for the accuracy, completeness, or usefulness of any information, apparatus, product, or process disclosed, or represents that its use would not infringe privately owned rights. Reference herein to any specific commercial product, process, or service by its trade name, trademark, manufacturer, or otherwise, does not necessarily constitute or imply its endorsement, recommendation, or favoring by the United States Government or any agency thereof, or the Regents of the University of California. The views and opinions of authors expressed herein do not necessarily state or reflect those of the United States Government or any agency thereof or the Regents of the University of California.

UCRL-3656
Physics Distribution

UNIVERSITY OF CALIFORNIA
Radiation Laboratory
Berkeley, California

Contract No. W-7405-eng-48

DIRECTION OF POLARIZATION PRODUCED BY QUASI-ELASTIC SCATTERING OF 315-Mev PROTONS

Hugh Bradner and William Isbell

January 30, 1957

Printed for the U. S. Atomic Energy Commission

DIRECTION OF POLARIZATION PRODUCED BY QUASI-ELASTIC SCATTERING OF 315-Mev PROTONS

Hugh Bradner and William Isbell

Radiation Laboratory
University of California
Berkeley, California

January 30, 1957

ABSTRACT

Protons scattered quasi-elastically with energy 315 Mev at 13° from a beryllium target in the Berkeley synchrocyclotron were brought out of the machine, slowed by absorbers, and scattered in helium at 765 psi absolute pressure. Scatters at angles of $90^{\circ} \pm 22.5^{\circ}$ were detected in nuclear emulsions. Observed asymmetries in left versus right scattering of protons with energies below 14 Mev were used, in conjuction with phase shifts from p-He scattering data, to compute the direction of spin polarization. We find spin up from left scatter, in agreement with the predictions of spin-orbit coupling theory, and with the findings of other experimenters.

DIRECTION OF POLARIZATION PRODUCED BY QUASI-ELASTIC SCATTERING OF 315-Mev PROTONS

Hugh Bradner and William Isbell

Radiation Laboratory
University of California
Berkeley, California

January 30, 1957

INTRODUCTION

In 1954, Edwin Iloff and Hugh Bradner undertook an experiment to determine the spin direction in the polarization experimentally observed[1] from small-angle nuclear quasi-elastic scattering of high-energy protons. The final results presented here are a confirmation, with somewhat improved statistics and background, of work by Marshall[2] and of Brinkworth,[3] who did very similar experiments. All three experiments indicate a direction of polarization in agreement with theoretical predictions based on spin-orbit coupling.[4]

PRINCIPLE

When a beam of low-energy protons with polarization P is scattered from a material such as helium with known polarizing properties, it can be shown that the scattered beam will have an asymmetric angular distribution,

$$\sigma_i(\theta_i \phi_i E_i, P) = g_i(\theta_i E_i)[1 + PP_i(\theta_i, E_i)\cos \phi_i] , \qquad (1)$$

where $P_i(\theta_i E_i)$ is the polarization that would be produced if an unpolarized proton beam of energy E_i were scattered at a center-of-mass angle θ_i in helium; while ϕ_i is the angle between the plane of scatter in helium, and the plane of original scatter which produced the polarization P.[5]

The function $P_i(\theta_i E_i)$ for helium can be calculated for energies up to about 15 Mev from phase-shifts for proton-helium elastic scattering.[5] The polarization of a higher-energy beam can be determined by passing the protons through a degrader before scattering them in helium; since Wolfenstein has shown that reducing the proton energy in this way produces negligible depolarization.[6]

METHOD

In the experimental arrangement shown in Fig. 1, a 73 ± 8% polarized beam of 315 ± 5 Mev protons was obtained by scattering protons from a 1-inch thick beryllium target in the circulating beam of the 184-inch synchrocyclotron.[7] The beam, scattered outward--i.e., "left"--was trimmed by a 2-in.-high, 0.5-in.-wide premagnet collimator. It then passed through a bending magnet, and a second collimator 1 in. in diameter which extended through the concrete shielding wall of the cyclotron. Next, the beam passed through a thin-walled ion-chamber beam monitor and integrator, and then through a 69.1-g/cm^2

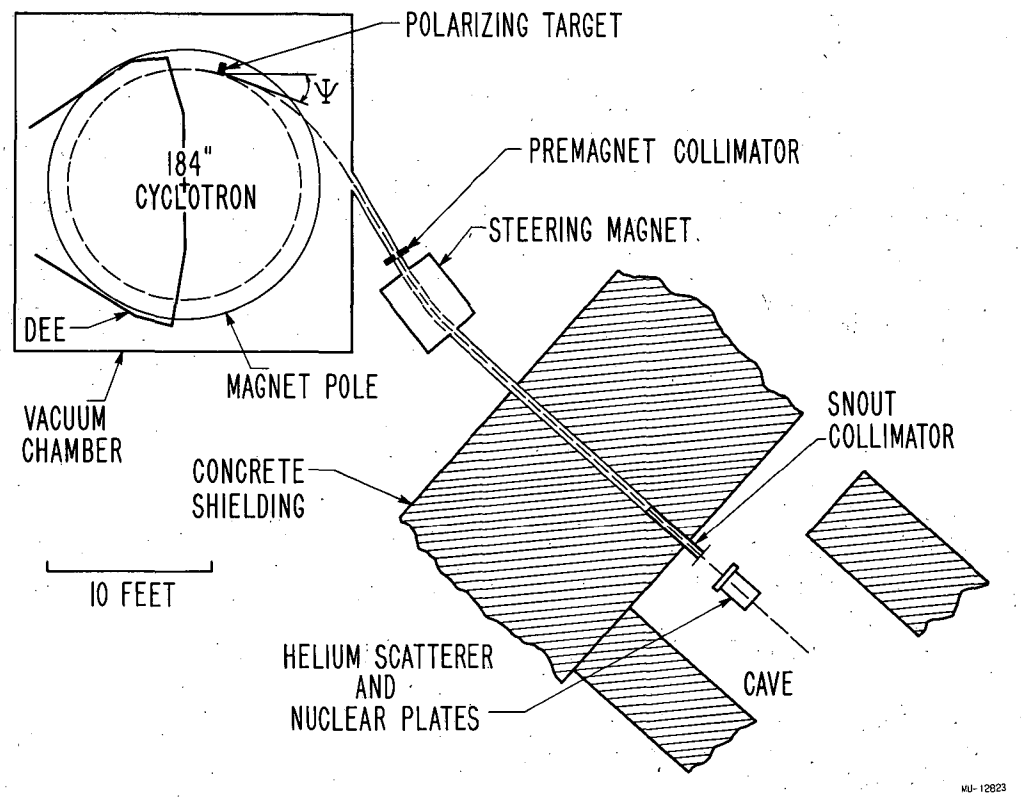

Fig. 1. Plan view of cyclotron, showing experimental arrangement for scattering polarized proton beam in helium. The setup is identical to that used by Segrè for double-scattering experiments, except that we placed the helium pressure vessel containing nuclear emulsions in the position normally occupied by Segrè's second scatterer.

copper absorber. Beyond the absorber was 4 in. of lead brick collimation in the form of a slit, tapered from 1.75 in. to 2 in. wide; and finally a 5-in.-diameter scattering chamber containing an iron collimator 1 in. in diameter and 1 in. deep, and 200-micron C-2 nuclear emulsion detectors in helium gas at 765 psi absolute pressure. The chamber was made as long as practical for handling, viz., 14 in., to minimize background from back-scattering.

The sides of the chamber were surrounded by a 4-in. layer of lead shielding. The front of the chamber was an iron plate of 0.759-inch thickness. The 69.1-g/cm^2 copper absorber, plus iron plate, were chosen to give protons a most probable energy of 10 Mev as they entered the helium.

The emulsions were placed in the chamber as shown in Fig. 2. We chose to place the plates with their faces horizontal, so that the direction and range of the protons could be determined accurately. In this arrangement, it is almost always possible to decide whether the particle is one which entered from the surface and stopped in the emulsion, or originated in the emulsion and recoiled out through the surface. Furthermore, observation of the tracks entering the emulsion from directions prohibited by the collimators allowed us to make accurate corrections for background. The 1-by-3-in. nuclear plates were clamped on 3/4 in. of the front end in an accurately machined fixture, so that their positions were symmetrical about the axis of the chamber, and reproducible to ± 0.050 inches. The surfaces of the emulsions were 0.50 in. above or below the centerline of the beam. The leading edges of the emulsion were 1.00 in. to the side of the center line.

PROCEDURE

The scattering chamber containing the emulsions was evacuated for 1/2 hour, and then filled with helium to 765 psi. A gage permanently attached to the chamber showed that there was no gas leak during any of the runs.

The polarized proton beam was obtained with the assistance of T. Ypsilantis, by duplicating the cyclotron running conditions of the Segrè group.[7] The energy was determined by measuring a Bragg curve with their ionization chamber inserted in place of the scattering chamber. Calibrated copper absorbers, plus an iron plate of the same thickness as the entrance window of the scattering chamber, were used for the determination.

The position of the beam was determined by exposing x-ray film. After the film was processed, it was carefully replaced in the same position, and a machinist's surface gage, mounted on the flange of the cyclotron deflected-beam exit window, was positioned on the center of the beam. The beam direction was determined by exposing a second film approximately 12 ft beyond the first one, and stretching a string between the two. A grooved plate was aligned visually with the string. The scattering chamber was set into the grooved plate; and the center of the front window of the chamber was positioned, at the point indicated by the surface gage, by using the motor-driven movable platform of the cyclotron cave.

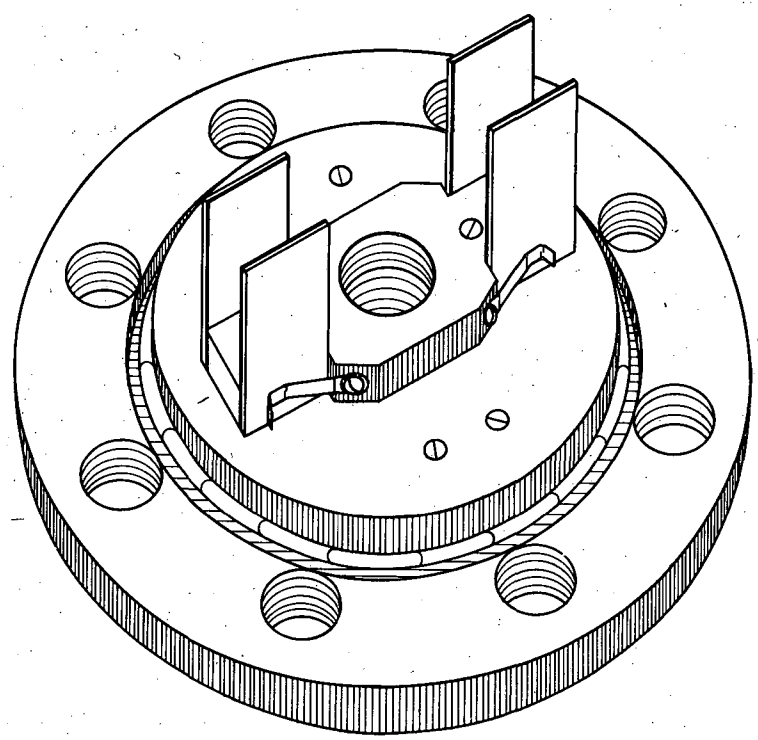

Fig. 2. View of holder for nuclear emulsions. Plates held in a machined fixture were arranged symmetrically around the proton beam.

A copper absorber of 69.07 g/cm^2 was placed in the beam, so that protons would have a most probable energy of 10 Mev as they entered the helium. Straggling produced a beam with substantially flat energy distribution between zero and our upper measured energy of 14 Mev. The polarized beam was integrated to a total of 0.164 units (with arbitrary scale factor) during a run of 8 hours.

Then the scattering chamber was removed, loaded with new emulsions, evacuated, and filled with helium to 765 psi. The cyclotron was changed to give pulse-deflected unpolarized beam, and the location of the beam center was found to be unchanged. The scattering chamber was carefully replaced in position, and a 5-minute run of unpolarized beam was integrated to a total of 28.5 units.

The scattering chamber was again removed, loaded with new plates, evacuated, and replaced. A 5-minute run gave an integrated beam of 28.6 units. Cyclotron time did not permit making a run with evacuated scattering chamber and polarized beam.

Emulsions were processed in a normal way in D-19 developer, and were soaked for 1 hour in 5% glycerine before drying. The shrinkage of the emulsion was 50%.

The plates were scanned with a 10 X eyepiece and 22 X objective on a Bausch and Lomb microscope. Angles and dips were checked under a 100 X objective. Scanning was done with an overlap of one-half field of view on successive sweeps, so that all areas of the emulsions were viewed twice. Only tracks entering the free surface and stopping in the emulsion were considered. Only tracks with projected length between 44μ and 590μ, and incident direction at 90° ± 22.5° to the direction of the beam were considered. The upper limit of acceptable range corresponded to a proton energy of 14 Mev before scattering in helium. The lower limit of acceptable range corresponded to the shortest proton tracks that could be reliably distinguished from α particles, which could arise from neutrons passing through the helium. Projected length, dip, and entering angle were recorded. Information on background was obtained by noting tracks coming from the bottom as well as from the top of the field of view, and by noting tracks with too steep a dip to come from the proton beam.

Table I shows the results of the scanning of twelve plates. Two separate scans were made on areas of the unpolarized emulsions.

The initial energy before scattering in helium, and the horizontal and azimuthal scattering angles, were computed for each accepted track. In order to do this, a line was constructed, corresponding to the trajectory of each scattered proton, by projecting backwards the track in the emulsion. Correction was made for emulsion shrinkage. Only tracks were accepted which projected back through the 1-in.-diameter proton beam. The length of each track in helium after scattering was taken to be the mean between maximum and minimum intersections with the proton beam.

Table I

Number of accepted tracks traveling in each direction, in the twelve plates that were scanned.

	Right up		Right down		Left up		Left down	
	corr. dir.	wrong dir.	corr. dir.	wrong dir.	corr. dir.	wrong dir.	corr. dir.	wrong dir.
Polarized	77	9	72	6	49	10	64	9
Unpolarized (1)			25	5			29	3
Unpolarized (2)	59	4	46	2	56	7	70	3
Background	27	8	23	15	12	18	19	11

ANALYSIS

In the interest of brevity, we follow the nomenclature and analysis method of the Marshalls.[2] Their equations are in agreement with a more formal treatment of the maximum-likelihood method, applied by Solmitz to this particular experiment.[8]

It is obvious from our Eq. (1) that the probability of having found an event of characteristics $(\theta_i \phi_i E_i)$ is proportional to σ_i, and hence that the probability Q_N of finding the events $(\theta_1 \phi_1 E_1)$, $(\theta_2 \phi_2 E_2)$ --- $(\theta_N \phi_N E_N)$ is proportional to the product of the corresponding σ_i's. Taking logarithms of both sides, we can write

$$\ln Q_N = \text{const} + \sum_{i=1}^{N} \ln \sigma_i(\theta_i \phi_i E_i P) . \qquad (2)$$

Let us call the true value for the polarization of the proton beam incident on the helium P*, and expand $\ln\sigma$ in a Taylor's series about this value. The experimental estimates of P should lie in a reasonably narrow Gaussian distribution about P*; and this implies that the term in (P-P*) must be zero, while the terms beyond $(P-P^*)^3$ must be small. Using the same convention as the Marshalls for the direction of positive unit vector--viz., cos ϕ positive for scattering to the right--we obtain their Condition (4),

$$\sum_{\text{right}} \left(\frac{P_i \cos\phi}{1 + PP_i \cos\phi_i} \right)_{P=P^*} = \sum_{\text{left}} \left(\frac{P_i \cos\phi_i}{1 - PP_i \cos\phi_i} \right)_{P=P^*} . \qquad (3)$$

The expected polarization $P_i(\theta_i E_i)$ was computed in terms of phase shifts for proton-helium scattering, following the treatment by Lepore.[4] With proper interpretation of the Coulomb dependence, Lepore's treatment is in agreement with Wolfenstein.[6] Calculations were made in 0.5-Mev intervals

from 3.5 Mev to 14 Mev by IBM - CPC machine, using the phase shifts through d-wave for low-energy proton-helium scattering.[9] Coulomb dependence was included. Phase shifts were extrapolated graphically in the region from 9.48 to 14 Mev. Computed polarizations for even integral energies are shown in Fig. 3. Our values are in good agreement with curves by Dodder,[10] and with the curves by Brinkworth, if account is taken of the reversal in sign. The results are only in qualitative agreement with the curves by Marshall.

Figure 4 shows the weighted sums of the left versus right scattering, as a function of assumed polarization of the beam incident on the helium. Figure 5 shows the results of a similar computation, done as a check, on the unpolarized-beam plates. The probable errors indicated on the curves were obtained, following the Marshalls, by computing

$$\frac{\sqrt{2}}{\left[\sum_{rt.}\left(\frac{P_i \cos\phi_i}{1 + PP_i\cos\phi}\right)^2 + \sum_{left}\left(\frac{P_i \cos\phi_i}{1 - PP_i\cos\phi}\right)^2\right]^{1/2}} . \tag{4}$$

The higher-order terms in our expansion gave

$$\Sigma \ln\sigma_i(P) =$$

$$\text{const.} - \left(\frac{\overline{\Delta P}}{0.14}\right)^2 - \frac{(\overline{\Delta P})^3}{3}(4.92) - \frac{(\overline{\Delta P})^4}{4}(7.52) + \frac{(\overline{\Delta P})^5}{5}(0.99) + \ldots \tag{5}$$

DISCUSSION

Our computed polarization of + 0.30 indicates that the nuclear polarization vector of 315-Mev protons scattered out of the Berkeley synchrocyclotron is in the direction predicted by spin-orbit coupling theory. If we consider our results statistically, we see that the sign could be reversed only if our data sample were in error by 2.8 standard deviations or more.

Our computed magnitude of polarization does not agree with the known magnitude of the original beam polarization.[7] Our randomly distributed background of 13% would not lower the polarization from 70% to our observed value. Such a reduction would occur only if approximately 40% of the background tracks were oriented in directions corresponding to large polarizations. The effect of a background $h_i(\theta_i E_i)$ can be treated by adding this function h_i to Eq. (1). We can regroup terms, to obtain an expression similar to (1):

$$\sigma_i(\theta_i \phi_i E_i P) = g^*_i(\theta_i E_i)\left[1 + P_{c_i} P_i(\theta_i E_i)\cos\phi_i\right] , \tag{6}$$

where

$$g^*_i(\theta_i E_i) = \left[g_i(\theta_i E_i) + h_i(\theta_i E_i)\right] \tag{7}$$

and

$$P_c(\theta_i E_i) = \frac{g_i(\theta_i E_i)}{g_i^*(\theta_i E_i)} P . \tag{8}$$

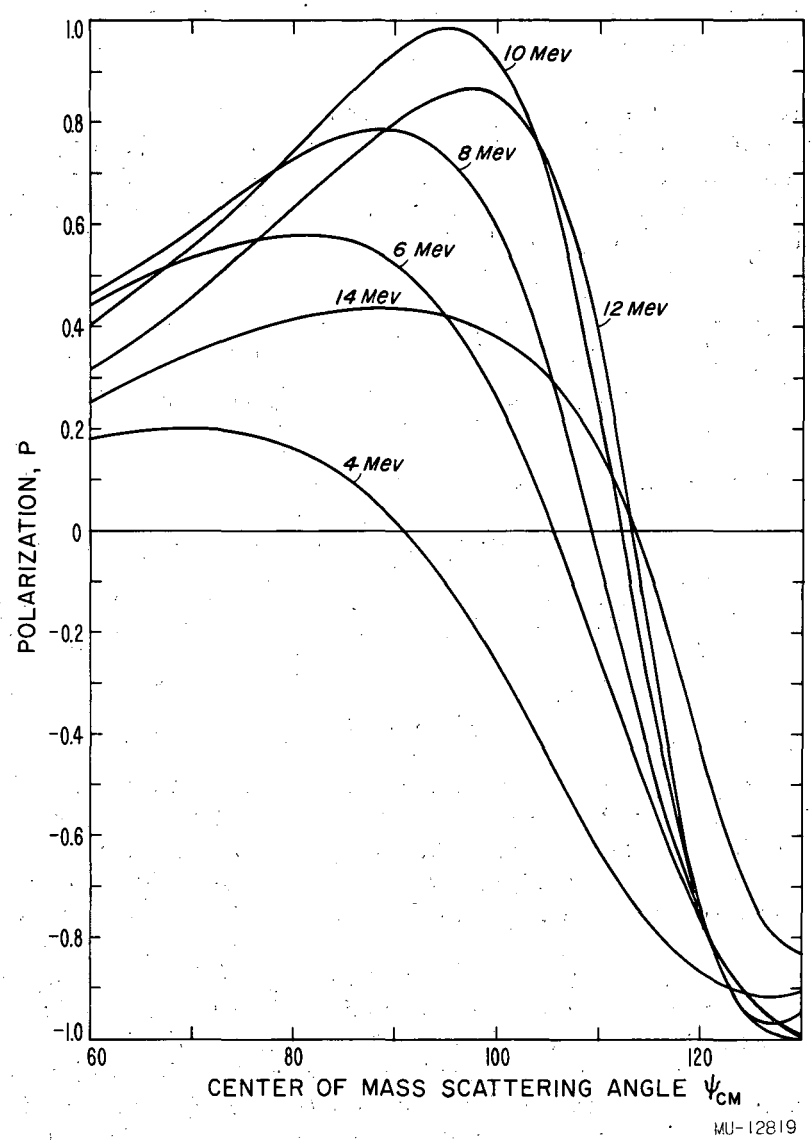

Fig. 3. Graph of computed values for polarization P that would be produced when protons of incident energy E (lab system) are scattered at center-of-mass angles ϕ in helium. Values were computed from phase-shift analyses of proton-helium scattering experiments up to 9.48 Mev, and by extrapolation of the phase shifts up to 14 Mev.

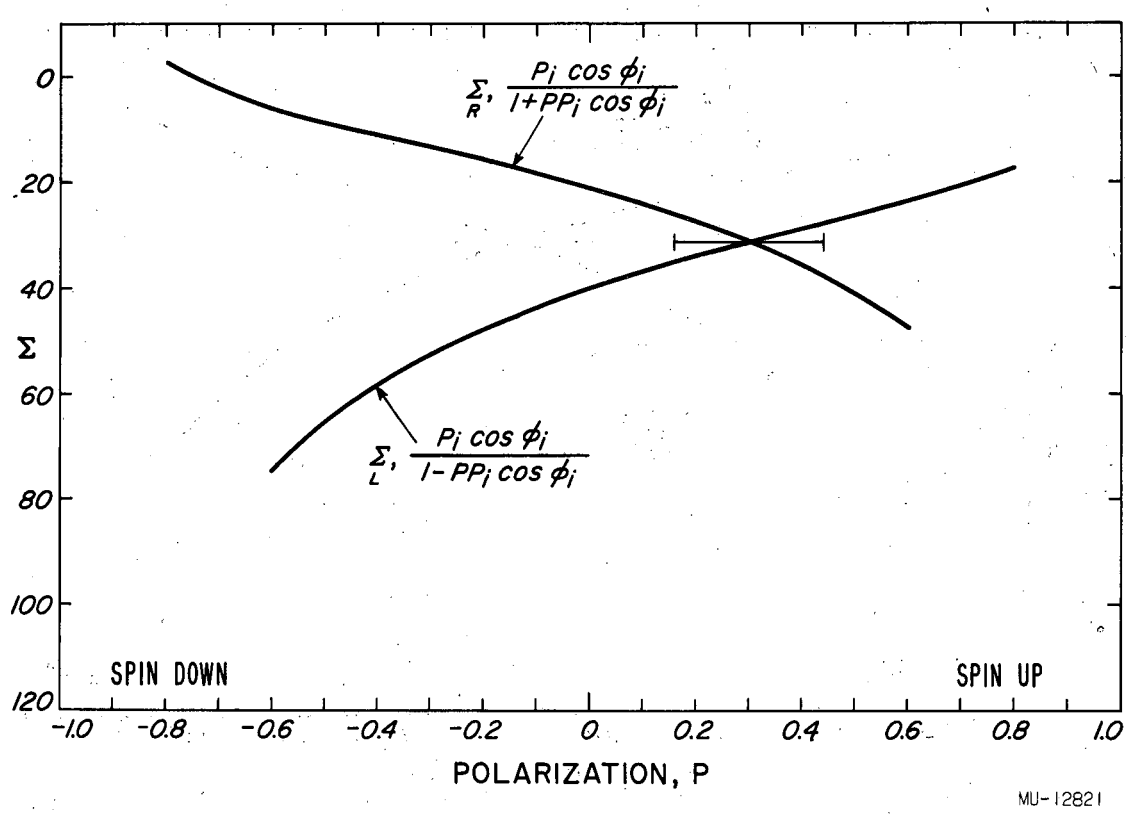

Fig. 4. Scattering of polarized beam in helium. Plot of weighted sums of left scatters and right scatters vs assumed initial polarization P. A correction for background, amounting to 2%, has been made. The maximum-likelihood value of P is at the intersection of the two curves, viz., +0.30. The error shown is statistical probable error computed from Eq. (4).

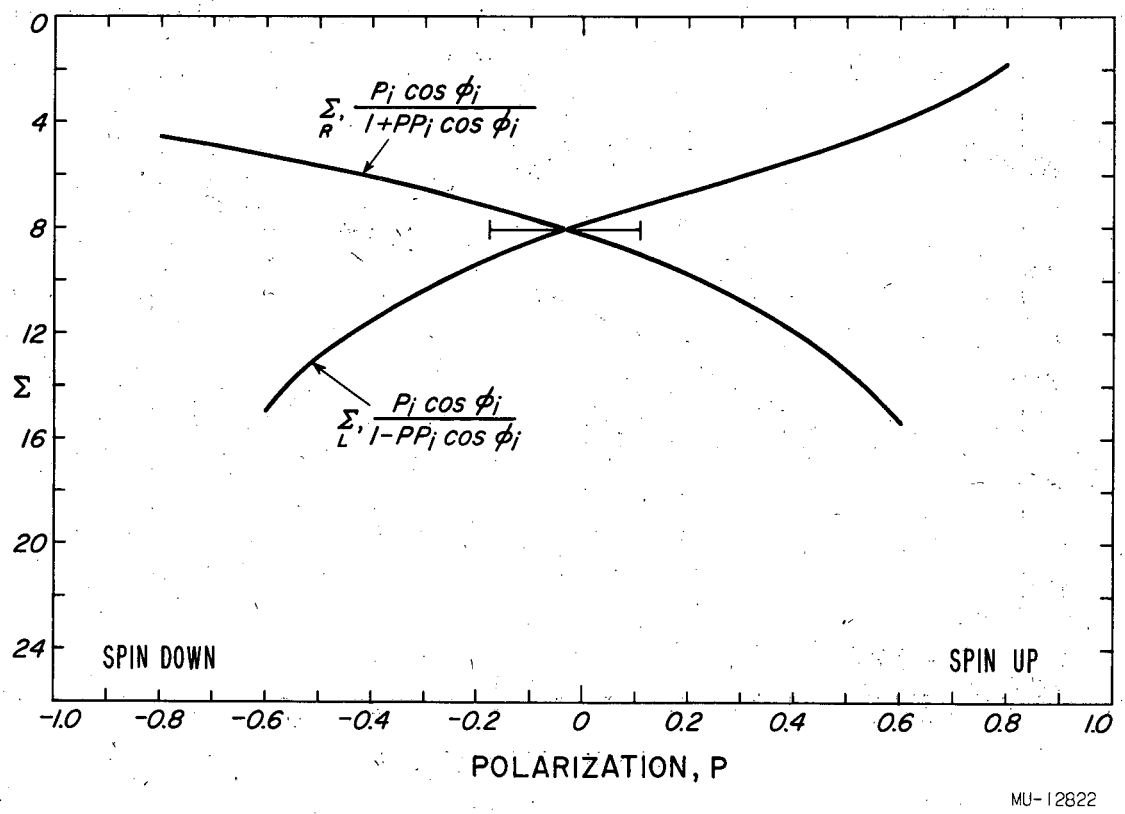

Fig. 5. Scattering of unpolarized beam in helium. Plot of weighted sums of left scatters and right scatters, vs assumed initial polarization P. A correction for background, amounting to 2%, has been made. Maximum-likelihood analysis in this case gives a value of -0.03 ± 0.14 for the polarization of the incident unpolarized beam.

The emulsions are detectors with substantially constant efficiency over the range of angles and energies accepted, so that the term $g_i(\theta_i E_i)$ can be taken to be proportional to the proton-helium differential scattering cross section. For the computation in this paper, our background h_i can be taken as 13% of the total number of tracks, and independent of angle and energy. By reference to the experimental curves of $d\sigma/d\Omega$ versus θ and E, we can say that the maximum and minimum values of $g_i(\theta_i E_i)/g_i^*(\theta_i E_i)$ are approximately 0.95 and 0.70. Values below 0.80 correspond to such small scattering cross sections that they rarely occur. We are justified in taking an average value for $g_i/g^*_i = 0.85$ or 0.90. Thus we conclude that the polarization computed in the presence of background should be corrected by a factor of 1.1 or 1.2.

In computing polarization, we took the path length of protons after scattering in helium to be the mean between the closest and farthest parts of the incident beam. The energy loss of our low-energy protons in helium is not small; therefore the finite beam diameter introduces an appreciable uncertainty in polarization. For example, a proton of 50 μ range stopping in the middle of an emulsion after a 90° scatter in helium could have had an initial energy of 7.7 Mev to 10.3 Mev, and hence a corresponding polarization between + 0.3 and + 0.7.

Another possible cause for our low polarization is a dilution due to inelastic scattering of protons in helium. Since the initial 310-Mev proton beam had an energy spread of ± 5 Mev, our degraded beam was a broad Gaussian, peaked near 10 Mev, with about 25% contamination of energy above 35 Mev. The data from Benveniste and Cork,[11] and of Eisberg[12] on scattering of 32-Mev and of 40-Mev protons do not show any large inelastic peaks, and hence support the conclusion that the dilution in asymmetry due to this contamination is small.

The apparent polarization is reduced in our experiment, compared with the double-scattering experiments, because of the Larmor precession of the polarization vector in the horizontal components of the magnetic fields in the cyclotron and steering magnets. This effect is small.

An unknown, but possibly large, source of error is in the choice of phase shifts. Predicted polarization is strongly dependent on the choice of phase shifts from scattering data. For example, the errors of ± 3° in S-wave and ± 2° in p-wave shifts in the work of Kreger[13] produce uncertainties of about 25% in double-scattering polarization in the 3-Mev experiment of Scott and Segal.[14]

Our phase shifts were extrapolated graphically in the region above 9.48 Mev. At 13 Mev, our S_1^+ and S_1^- phase shifts were respectively - 3° and + 8° away from the corresponding shifts that would be obtained by linear extrapolation of the logarithmic derivatives, (aY), of the P-wave functions.[15]

Recently, Brockman has computed phase shifts from 17.5-Mev p - α scattering data.[16] If the linear relation between (aY) and energy is made to fit his 17.5-Mev p-wave shifts as well as the lower-energy data, the resultant S_1^+ and S_1^- shifts at 13 Mev are found to be approximately - 4° and + 6° different from the values we used for computing polarizations. The differences between extrapolated and interpolated values for the other phase shifts have not been estimated; but the effect on the predicted polarization can clearly be large.

CONCLUSION

The direction of polarization produced by small-angle quasi-elastic scattering of protons on beryllium is found to agree with the predictions of spin-orbit coupling theory. The difference in magnitude between computed and previously measured polarization of the beam can probably be accounted for by uncertainties in the phase shifts for proton-helium elastic scattering.

ACKNOWLEDGMENT

The helium scattering method was suggested by Edward Teller. The IBM program, and calculation of expected polarizations for proton-helium scattering, were done by Robert Johnston. We are indebted to a number of people at the Radiation Laboratory for duscussions and counsel, especially Warren Heckrotte, Joseph Lepore, Myron Heusinkveld, and Frank Solmitz.

This work was done under the auspices of the U. S. Atomic Energy Commission.

REFERENCES

1. Oxley, Cartwright, Rouvina, Baskir, Klein, Ring, and Skillman, Phys. Rev. 91, 419 (1953);
   Chamberlain, Segrè, Tripp, Wiegand, and Ypsilantis, Phys. Rev. 93, 1430 (1954).
   Marshall, Wedzel, and Marshall, Phys. Rev. 93, 927 (1954).

2. L. Marshall and J. Marshall, Phys. Rev. 98, 1398 (1955).

3. M. J. Brinkworth and B. Rose, Nuovo Cimento 3, 195 (1956).

4. J. V. Lepore, Phys. Rev. 79, 137 (1950);
   E. Fermi, Nuovo Cimento II, 407 (1954);
   Snow, Sternheimer, and Yang, Phys. Rev. 94, 407 (1954);
   W. Heckrotte and J. V. Lepore, Phys. Rev. 95, 1109 (1954).

5. See, for example, Lepore, Phys. Rev. 79, 137 (1950).

6. S. Wolfenstein, Phys. Rev. 75, 1664 (1949).

7. Chamberlain, Segrè, Tripp, Wiegand, and Ypsilantis, Phys. Rev. 102, 1659 (1956).

8. Frank Solmitz, private communication.

9. D. C. Dodder and J. L. Gammel, Phys. Rev. 88, 520 (1952). We used the values listed as "A" in their tabulation.

10. D. C. Dodder, private communication.

11. J. Benveniste and B. Cork, Phys. Rev. 89, 422 (1953).

12. R. Eisberg, Phys. Rev. 102, 1104 (1956).

13. Kreger, Jentschke, and Kruger, Phys. Rev. 93, 837 (1954).

14. M. J. Scott and R. E. Segal, Phys. Rev. 100, 1244A (1955).

15. Dodder and Gammel, loc. cit. We have adjusted abscissa of their Fig. 1 by a factor 5/4.

16. Karl W. Brockman, Jr., Phys. Rev. 102, 391 (1956).