UCRL 369

UNIVERSITY OF CALIFORNIA

Radiation Laboratory

For Reference

Not to be taken from this room

BERKELEY, CALIFORNIA

Special Review of
Declassified Reports
UCRL-369
Authorized by USDOE JK Bratton
Unclassified TWX P182206Z May 79 N/949

REPORT PROPERLY DECLASSIFIED

J. U. Green 3-25-80
Authorized Derivative Classifier Date
Larry Bakken

DISCLAIMER

This document was prepared as an account of work sponsored by the United States Government. While this document is believed to contain correct information, neither the United States Government nor any agency thereof, nor the Regents of the University of California, nor any of their employees, makes any warranty, express or implied, or assumes any legal responsibility for the accuracy, completeness, or usefulness of any information, apparatus, product, or process disclosed, or represents that its use would not infringe privately owned rights. Reference herein to any specific commercial product, process, or service by its trade name, trademark, manufacturer, or otherwise, does not necessarily constitute or imply its endorsement, recommendation, or favoring by the United States Government or any agency thereof, or the Regents of the University of California. The views and opinions of authors expressed herein do not necessarily state or reflect those of the United States Government or any agency thereof or the Regents of the University of California.

UNIVERSITY OF CALIFORNIA
Radiation Laboratory

Cover Sheet
Do not remove

INDEX NO. UCRL-369
This document contains ____ pages
and ____ plates of figures.
This is copy 10 of 18 Series A

DECLASSIFIED

Issued to Info Div. Files

~~CONFIDENTIAL~~
Classification

Each person who receives this document must sign the cover sheet in the space below

Route to	Noted by	Date	Route to	Noted by	Date

CONFIDENTIAL

Fission Excitation Functions for Charged Particles

DECLASSIFIED

By

John Albert Jungerman
A.B. (University of California) 1943

DISSERTATION

Submitted in partial satisfaction of the requirements for the degree of

DOCTOR OF PHILOSOPHY

in

Physics

in the

GRADUATE DIVISION

of the

UNIVERSITY OF CALIFORNIA

Approved:

. . . . . .

. . . . . .

. . . . . .

Committee in Charge

Deposited in the University Library . . . . . .
Date Librarian

[redacted]AL

DECLASSIFIED

OUTLINE

Abstract

I. Introduction

II. Preliminary Experiment

A. Introduction

B. Experimental Details

C. Results

D. Discussion

III. Concluding Experiment

A. Introduction

B. Apparatus

1. Beam Collimation and Energy Reducing Equipment

2. Fission Ionization Chamber and Beam Current Collecting Equipment

3. Electronics

4. Beam Current Integrator

5. Control Box

6. Targets

C. Method

1. Excitation Functions

2. Measurement of the Average Energy Required to Form an Ion Pair

3. Beam Energy Determination

D. Results

1. Excitation Functions

2. Value of w

3. Value of $Bi(\alpha,2n)At^{211}$ cross section

DECLASSIFIED

ABSTRACT

The absolute excitation functions for the production of fission were investigated with the 37.5 Mev alpha-particles and the 18.7 Mev deuterons available from the 60-inch Crocker cyclotron. Thorium and uranium of ordinary isotopic composition were used as targets in a preliminary experiment which employed the stacked foil technique and assumed that the beta activity of the complex of fission fragments could be used as an indicator of the relative number of fissions in a given excitation function.

A second experiment was done to measure the same excitation functions by a more direct method. In this work the pulses of ionization produced by the fission fragments were counted in the presence of the ionization produced by the cyclotron beam. The effect of the latter was largely nullified by using an additional cancellation electrode in the fission ionization chamber. The excitation functions for U^{235} were also obtained in this experiment. In order to find the absolute fission cross section it was necessary to measure the average amount of energy required to form an ion pair in argon. The values 29.6 ev and 30.5 ev were obtained for 17 Mev deuterons and 30 Mev alpha-particles respectively.

Consideration of the calculated total cross section and the observed fission cross sections in the threshold energy region indicates that r_o must be greater than 1.3 (the nuclear radius, $R = r_o A^{1/3} \times 10^{-13}$ cm) and that appreciable competition exists with the fission process in the higher energy region in any of the reactions observed. The competition

is least in the case of U^{235} and greatest for Th^{232}. On the other hand preliminary measurements using the 184-inch synchro-cyclotron show that the fission cross section is still of the order of one barn for 340 Mev protons. Thus the fission process can still compete effectively at high energies whereas it has been observed that the excitation functions for reactions in which a certain number of particles is emitted decrease rapidly in the high energy region if they have an appreciable cross section at lower energies.

DECLASSIFIED

FISSION EXCITATION FUNCTIONS FOR CHARGED PARTICLES

John Jungerman

I. INTRODUCTION

The production of fission by means of bombardment with charged particles was first observed by Gant.[1] He found that uranium had a fission threshold for a deuteron energy of 8 Mev and that the fission cross section rapidly increased in the region 8 to 9 Mev. Jacobsen and Lassen[2] tried to get a quantitative fission cross section for deuteron-induced fission by measuring the beta activity of the fission fragments. By making the assumption that three beta-particles were emitted, on the average, from every fission fragment during the time of their beta activity measurement they obtained a cross section of 5×10^{-27} cm^2 for the fission cross section 9 Mev deuterons on a uranium target. They also found the value .7 for the ratio of the fission cross sections of thorium and uranium bombarded with 9.5 Mev deuterons. Dessauer and Hafner[3] found that fission could also be induced in uranium and thorium by proton bombardment. The production of fission was identified by means of the complex decay curve of the fission fragment beta activity. The proton energy used for these experiments was 6.9 Mev. Fermi and Segrè[4] first discovered the production of fission in uranium by alpha-particle bombardment using the 32 Mev alpha-particles of the 60-inch Crocker cyclotron. Several of the more prominent members of the fission chains were separated chemically and identified from their beta activities.

II. PRELIMINARY EXPERIMENT

A. Introduction

The following is a description of a preliminary attempt to measure absolutely excitation functions for fission induced in thorium and uranium of ordinary isotopic composition under alpha-particle and deuteron bombardment. This experiment was performed by S. C. Wright and the author.[5] The method used consisted of placing thorium or uranium coated aluminum foils alternately with aluminum "catchers" in a stack. The stack was then bombarded with alpha-particles or deuterons. Later the beta activities of the recoil fission fragments collected in these "catcher" foils were counted. If it is assumed that, for a particular reaction, the distribution of fission products is independent of the energy of the bombarding particle, then the measurement of these beta activities at a given time after bombardment gives a relative excitation function.

B. Experimental Details

Absolute calibration of the cross sections was made possible by the measurements of E. Segrè. He used the Chicago pile to produce a known number of fissions in one of the foil stacks. The decay curve obtained from the beta activity of one of these "catchers" provides an absolute cross section scale if one assumes that counters of identical construction used in Berkeley and Chicago had the same efficiency for fragment activities when they had the same counting rates for a uranium glass standard. It must also be assumed that the complex of the fission products formed in the slow neutron and charged-particle reactions have the same decay curves for a given number of fissions. It was fully

realized that this last assumption is open to serious objections because of the probability of different composition of the product complexes in the various cases.

The thorium or uranium coated foils were prepared by being alternately painted with a solution of the nitrate on .001 inch aluminum and then baked at 550° C until the oxide was formed.[6] Alpha counting determined the amount of material per foil. Collimation of the cyclotron beam was attained by using a collimating tube about two and one-half feet long which was terminated by a 1/8 inch slit of tungsten. The tube was attached directly to the cyclotron vacuum system. The beam passed through the slit into a wheel with 20 slots which contained different thicknesses of aluminum absorbers and in one slot contained the foil stack. After passing through the wheel, the beam was caught in a Faraday cup, which also formed the vacuum seal for the collimating system. The position of the wheel could be changed by remote control. Thus each of the absorbers was in turn placed in the path of the beam, while the amount of beam current stopped and the amount transmitted were determined simultaneously by current amplifiers. This gave the fraction of the total beam current transmitted for various thicknesses of absorber. Thus the mean beam range was determined for each bombardment. During a bombardment the current collected by the Faraday cup was amplified and recorded on an Esterline Angus Recording Milliammeter. The resulting trace was planimetered to determine the number of particles that had passed through the foil stack.

The beta activity of the "catcher" foils was counted at standard times after bombardment, corrected for the aluminum background, and

for counter coincidence when necessary. Then all counts were reduced to one microampere hour of particles incident upon a fixed number of uranium or thorium atoms. Conversion of the beam energy from mg/cm^2 of aluminum to Mev was made using the range ratio of air to aluminum obtained by R. R. Wilson[7] and the range in air obtained by Livingston and Bethe.[8]

Activities of the fission products in the various "catchers" of the foil stack remained in a constant ratio during the course of time, within the limits of experimental error. This constant ratio indicates that the beta activity of the fission products in the complex, for a given reaction is independent of the energy of the particle causing the fission. This circumstance supports the use of the fragment activity as an indicator of the relative number of fissions occurring at different energies in a given reaction and also makes it possible to obtain a more accurate decay curve of the fragment complex of each reaction by averaging the activities of several of the associated "catchers."

C. Results

Figure 1 shows the decay curves of the fission product complexes formed in the various reactions. To obtain these curves the activity of each of twenty or more "catchers" associated with a particular reaction was measured at a given time after bombardment. The average of these activities gives a point on the corresponding decay curve. All these curves are normalized to 100 c/m at 66 hours after the end of a bombardment. At this time the beta activity of a catcher from a

foil bombarded with the full beam energy was several thousand counts per minute.

Figure 2 shows the fission excitation functions measured. The absolute cross sections for the alpha-fission reactions were obtained by matching the recoil fragment decay curves directly to the slow neutron fission fragment decay curve at 2.75, 3.0, and 5.0 days and averaging. As a slow neutron fission fragment decay curve was not available beyond 5 days, the deuteron decay curves were matched to the thorium alpha curve of Figure 1 at 12, 28, and 42 days and averaged. The experimental probable error due to beta counting, non-uniformity of foils, integrated current measurement, etc., is estimated to be about twenty percent.

This method was found inapplicable to proton-induced fission because the maximum proton energy (9.4 Mev) available was just above the fission threshold and therefore the aluminum background was prohibitive. This background activity was instead less than five percent of the fragment activity seven days after a short alpha-particle bombardment and twelve days after a short deuteron bombardment. Bombardments were of 40 minutes to 90 minutes duration, and the beam current was of the order of 10^{-8} ampere.

D. Discussion

If no competing processes are assumed, a calculation of the cross section may be made by a method given by Bethe[9] and Bethe and Konopinski.[10] According to this treatment

$$\sigma_{total} = \pi \lambda\!\!\!^{-2} \sum_{\ell} (2\ell + 1) P_{\ell}$$

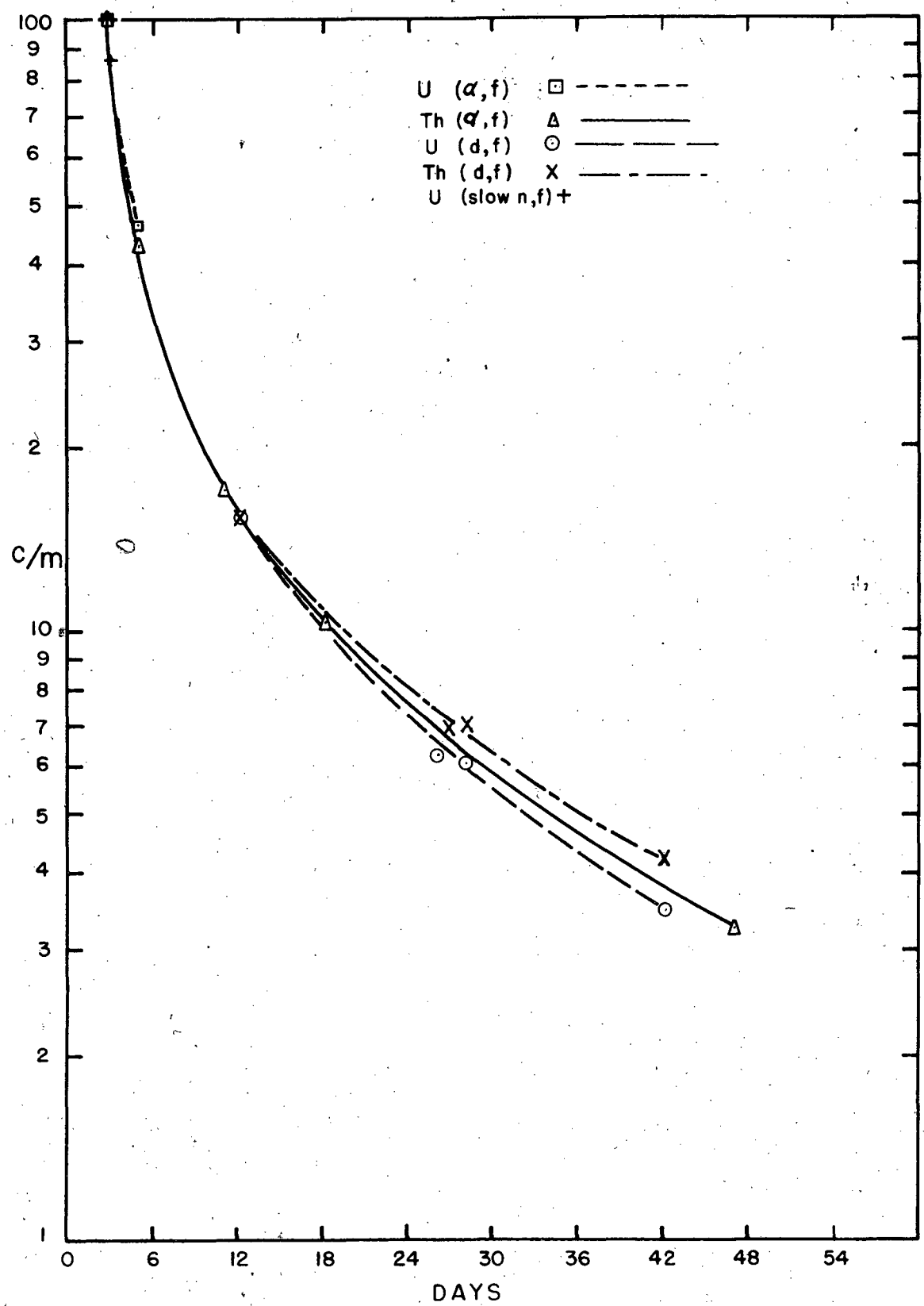

FIG. 1

FISSION PRODUCT DECAY CURVES

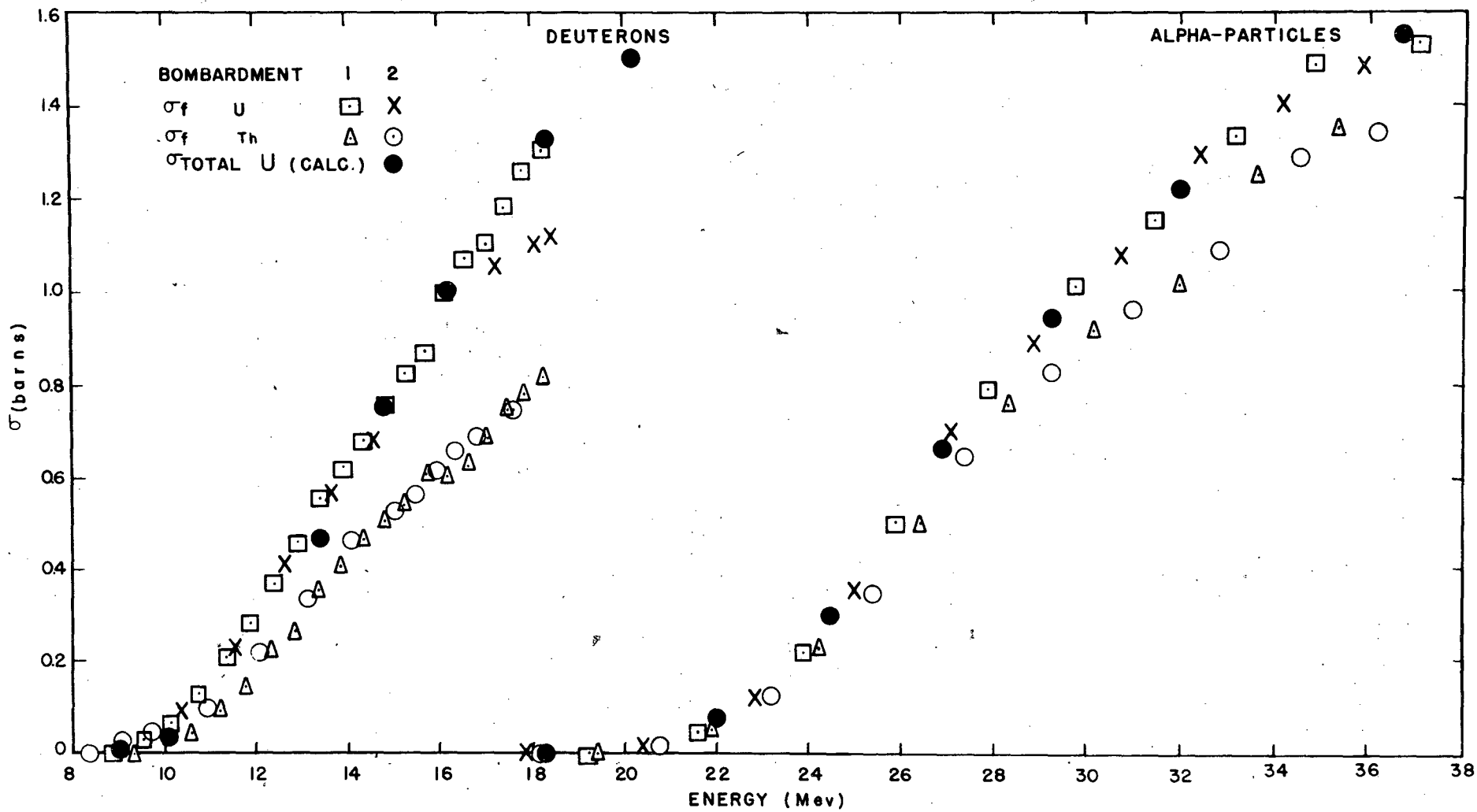

FIG. 2
FISSION EXCITATION FUNCTIONS

σ_{total} is the total cross section for formation of the compound nucleus. $\lambda\!\!\!^{-}$ is the wave length of the incident particle divided by 2π. P_ℓ is the penetration probability of the coulomb barrier of an incoming wave having an angular momentum $\ell\hbar$ with respect to the nucleus. Using the above expression an effective nuclear radius for the interaction of uranium and alpha-particles of $R = 1.78 \times 10^{-13} A^{1/3}$ cm fits the observed excitation function. Again if no competing processes are assumed and Oppenheimer-Phillips type interaction is neglected, an effective radius for uranium bombarded with deuterons is $1.60 \times 10^{-13} A^{1/3}$ cm in order to get agreement with the U(d, fission) excitation function. As will be seen later, the assumption of no competition with the fission process in the case of uranium is not confirmed by the results of the next experiment.

III. CONCLUDING EXPERIMENT

A. Introduction

In recognition of the possibly unwarranted assumptions made in the above experiment concerning the beta activity of the fragments from the charged particle fission, it was decided to repeat the experiment by a more direct method. This method consisted in counting the pulses of ionization produced by the fission fragments in an ionization chamber. The detection of a fission pulse in the presence of the ionization produced by the beam itself is made possible by using a cancellation principle suggested by C. Wiegand.*

B. Apparatus

1. Beam Collimation and Energy Reducing Equipment

Figure 3 shows a schematic drawing of the experimental arrangement. The beam collimation was done as in the preliminary experiment except that the slit width at the end of the tube was widened to 1/4 inch. The beam emerging from the defining slit was found to be quite homogenous in energy by Kelly and Segrè.[11] because the fringing field of the cyclotron magnet causes the collimating tube to act as a velocity selector. The energy of this homogenous beam could be varied by means of aluminum foils placed in the two wheels shown in the figure. The arrangement was similar to that described by Kelly[12] except that a window of .001 inch dural was substituted for the Faraday cup. One of the wheels could be rotated while the cyclotron was in operation. This

---

*It was later discovered that this method had been used by Baldwin and Klaiber[13] to measure fission pulses in an x-ray background.

wheel had aluminum foils ranging in thickness from 1.5 mg/cm^2 to 30 mg/cm^2 and one slot had 339 mg/cm^2 of aluminum, which was greater than the range of either the deuteron or alpha-particle beams. The second wheel was provided with aluminum foils whose thickness increased about 30 mg/cm^2 from slot to slot. In this way it was possible to vary the energy of the beam particles over the entire energy range of the excitation function in steps corresponding to the energy loss in 1.5 mg/cm^2 of aluminum.

2. Fission Ionization Chamber and Beam Current Collecting Equipment

After leaving the wheels the beam passed through a .001 inch dural window, then through about 1 cm of air, and then entered the fission chamber through another .001 dural window. The beam encountered the fissionable material after passing through 3.4 cm of argon and another .001 inch of aluminum upon which the fissionable material was deposited. Six different samples could be selected while the cyclotron was in operation. This was accomplished by means of a direct current computer-motor and a control circuit which automatically stopped the motor when a previously selected sample had reached the proper position in the ionization chamber. A direct current motor was necessary since the apparatus operated in a magnetic field of 2000 gauss which was caused by the cyclotron magnet. The usual magnetic clutch brake used in the computer motor was inoperative and had to be removed because of the strong external magnetic field. However it was found that the samples would still position accurately since the eddy currents set up in the moving armature quickly dissipated its angular momentum.

Each sample was provided with a mask which covered all but a circular area of 3/8 inch diameter. The mask was made of .002 inch brass and was therefore of a thickness which was greater than the range either of the fission fragments or of the alpha-particles emitted by the radioactive samples. Before striking the sample the beam was further collimated by passing through a hole 5/16 inch in diameter in aluminum of .0625 inch thickness. The hole was accurately positioned with respect to the sample mask. It was thus assured that all the beam particles passing through the ionization chamber had actually traversed the fissionable substance.

The distance from the sample wheel to plate B was one-half inch. This was equal to the range of the fission fragments at the pressures used (about 150 cm Hg). Plate B was connected to the grid of the first tube of the preamplifier. It was constructed of aluminum leaf (.17mg/cm^2) which was held in position by a brass ring. Plate C was constructed similarly and served as a cancellation electrode. It was placed such that plate B was equidistant from A and C. The potentials were as indicated on the diagram. Since the pulse from the ionization in the chamber was determined by the collection of the electrons, the cancellation action can be understood as follows: an electron falling in the potential gradient from A to B produces a small change in voltage of plate B. An electron falling from B to C produces a change in voltage of equal magnitude, but of opposite sign on plate B. If the distance AB is made equal to BC, then the ionization pulse produced by the charged particle beam from side AB will be cancelled by an equal and

opposite pulse from side BC. This is explained in greater detail in the appendix. The fission fragment, however, spends its kinetic energy producing ionization in side AB only and hence produces a relatively large unbalanced voltage on the preamplifier grid.

Plates D, E, and F constituted an ionization chamber used to measure the beam current. The center collecting electrode, E, was surrounded by plates at high potential (600V) so that the charges would not be collected that were not formed in the region between the ionization chamber plates. Plates D, E, and F were constructed of aluminum leaf supported on copper wire rings. Aquadag was used to bind the leaf to the wire. Insulation was provided by ceramic standoff insulators on all parts (including plates A, B, and C).

After traversing the ion chamber, the beam passed through a .001 inch dural window. It then passed through 2 cm of air and entered a Faraday cup through a similar window. The vacuum in the cup was maintained by means of a connection to the cyclotron vacuum by means of two feet of rubber hose of 3/8 inch inside diameter. Insulation for the Faraday cup was provided by a piece of polystyrene. Since the apparatus was operated in a magnetic field of 2000 gauss, the geometry of the cup was such that secondary electrons ejected by the beam would have to exceed 220 ev. in order that they would not be captured by the cup.

3. Electronics

A block diagram of the experimental arrangement is also shown in Figure 3. The pulses from the fission ionization chamber were preamp-

lified before the signal was sent through the thirty feet of cable that was necessary to reach the amplifier outside the cyclotron shielding. The preamplifier was equipped with magnetic shields around each tube so that the effect of the magnetic field on the tube gain would be minimized. The preamplifier was so oriented that the path of the electrons in the tubes was parallel to the magnetic lines of force. A test showed that the electron collection in the fission ionization chamber was unaffected by the magnetic field. This matter is treated more fully in the appendix.

The output of the amplifier was connected to a scale of 64 and mechanical register. Parallel outputs fed a pulse into a blocking oscillator which triggered the sweep of a Du Mont No. 248 oscilloscope while another pulse was simultaneously delivered to a delay line of two microseconds which terminated on the deflection plates of the oscilloscope. By means of this arrangement the form of the ionization pulse could be observed if a five microsecond sweep speed was used. The delay in the arrival of the pulse on the deflection plates provided time for the sweep to start. By this method one can also observe the form of the base line before the ionization pulse arrives at the deflection plates. The shape of a typical fission pulse can be obtained by observing the pulse form when fission is induced by slow neutrons. It is shown in the following diagram. Amplifier RC was adjusted so that the pulse decayed to 1/e in 5 microseconds.

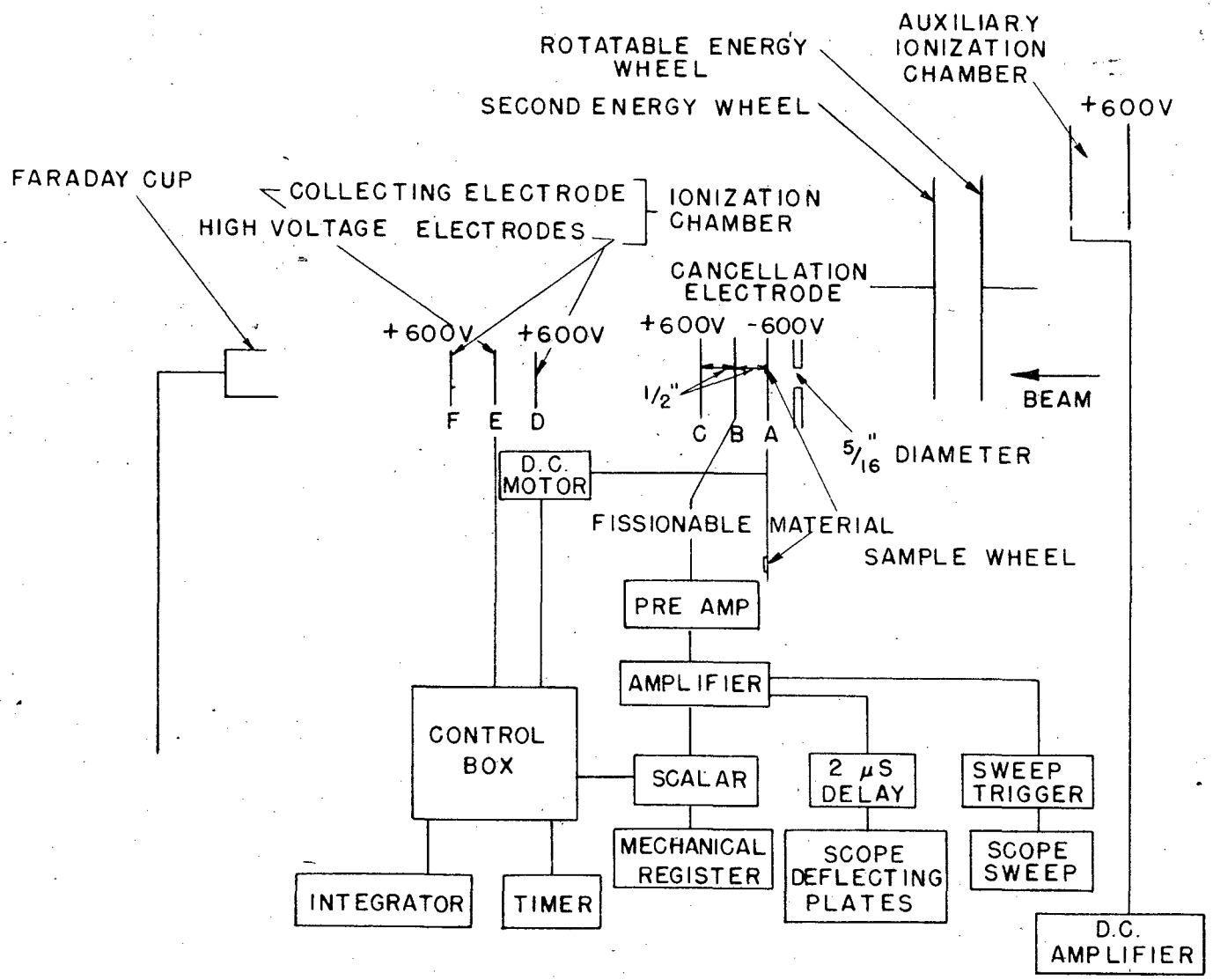

FIG. 3
EXPERIMENTAL ARRANGEMENT

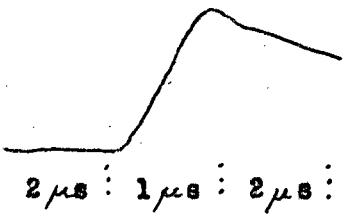

The pulses recorded as fissions in this experiment were observed to have the same form and magnitude as the slow neutron fission pulses. (Slow neutrons were generated with paraffin and a Ra-Be source.)

4. Beam Current Integrator

The beam current was integrated by measuring the voltage attained by a known capacitor. The capacitor could be charged directly by the beam current caught in the Faraday cup or it could be charged with the beam current magnified by the order of ten thousand times by measuring the charge collected by the ionization chamber. Polystyrene coaxial cables conducted the currents to the voltage measuring equipment. The voltage measurement was done electronically using a modification of a circuit of Vance[14] designed by C. Wiegand. The circuit is characterized by a high input resistance and therefore makes it possible to measure the voltage of the condenser without changing the value of the voltage. This was tested for the lowest capacity used in this experiment, that of the coaxial cables themselves (.001 microfarad), by charging the condenser to .7 volt and observing that the reading was unchanged after five minutes. The usual time for charging the condenser during the experiment was about two minutes. This instrument was calibrated using a Leeds and Northrup potentiometer. It was

found that no appreciable change in calibration occurred during the course of the experiment.

For the integration of the current from the ionization chamber a capacity of about 10 microfarads was needed. Several of the usual oil-filled condensers were tried but none proved satisfactory. That is, the test described above showed that the condensers had enough dielectric absorption so that about one-half of the charge originally stored in them would reappear during successive discharges. The condensers made by the John Fast Co. of Chicago did not show appreciable dielectric absorption or leakage by the above test. Their dielectric is made of polystyrene.

Since "fast" condensers of greater than .1 microfarad were not available, the range of the instrument was extended by using a potential dividing arrangement of capacitors as shown in the control box circuit, Figure 4. This had the consequence that the collecting electrode of the ionization chamber could reach as high as 100 volts on the least sensitive capacity selector position, while the integrator received only 1 volt. It might be suspected that such a high potential might have an effect on the current collected. This was proven not to be the case by collecting the current with a voltage of 100 volts and 1 volt with no detectable change in the amount of current obtained per unit beam current. (The beam current was monitored with the Faraday cup.) By this potential dividing arrangement equivalent capacities of 21.7, 2.00, and .205 microfarads could be selected. All capacity elements were measured with a General Radio capacity bridge which was

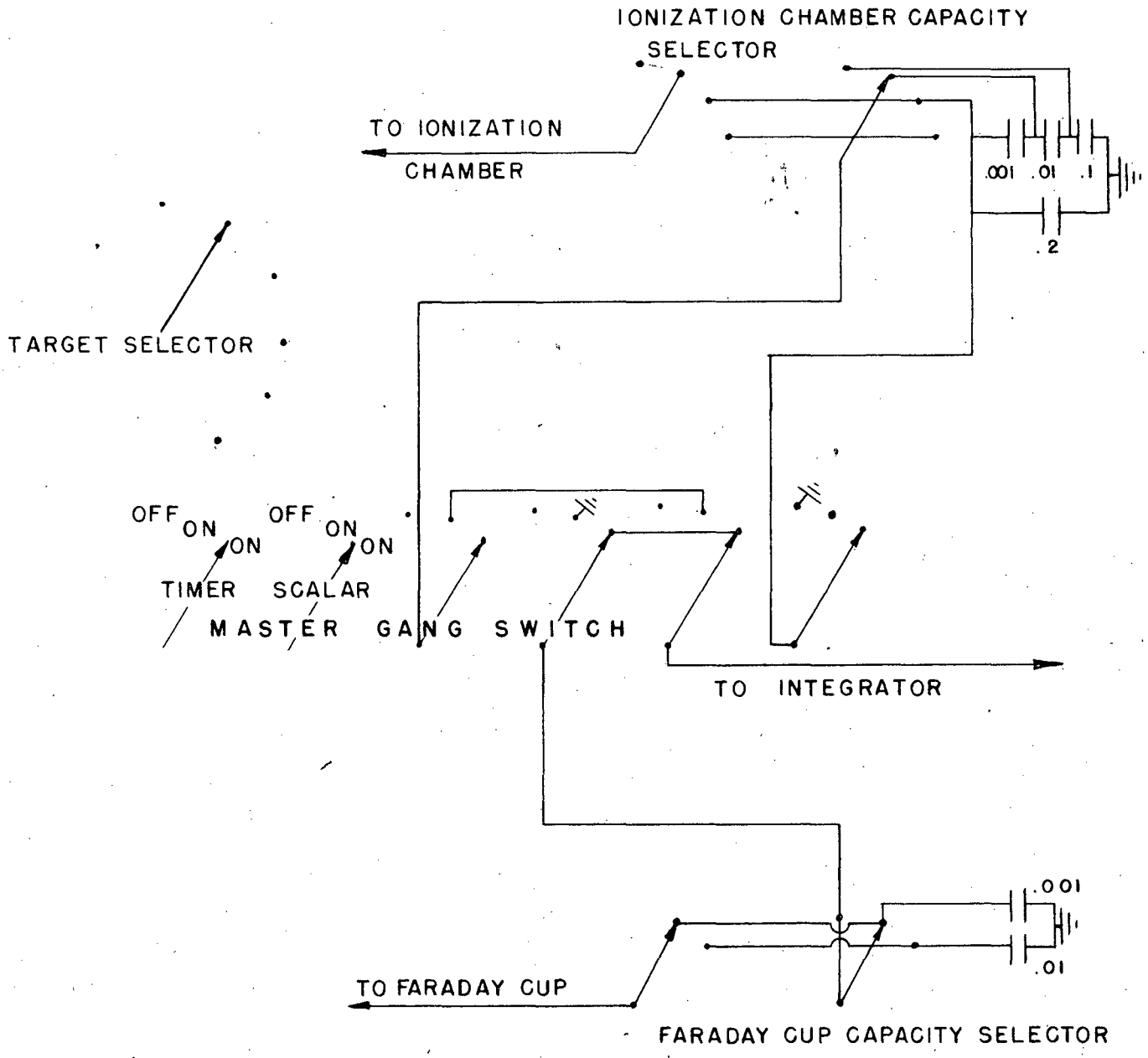

FIG. 4

CONTROL BOX

.13785-1

in turn calibrated with a standard capacitor.

5. Control Box

The control box contained a master gang switch which simultaneously actuated a sweep second timer, the scaling circuit, and the current integrator. It had two "on" positions; the one labeled I. C. in the diagram allowed voltage on the ionisation chamber to be measured by the integrator, while the one labeled F. C. connected the Faraday cup to the integrator. When the master switch was in the "off" position, an additional circuit returned the potential dividing capacitors to zero potential. The control box also contained the target selector circuit.

6. Targets

The samples of fissionable material were prepared as described in the stacked foil experiment. They were masked to 3/8 inch diameter circle in order to minimize the fission background due to neutrons generated by the cyclotron. The amount of fissionable material was determined by alpha counting. The alpha counting was done with the ionization chamber and the electronic equipment used for the experiment. In addition the samples were removed and counted in the laboratory alpha counter. The thicknesses agreed within experimental error (3 percent). In the case of U^{238} the specific activity was assumed to be known and equal to 750 counts per minute per milligram of uranium. Since the radioactive composition of the Th^{232} and U^{235} was unknown, the specific activity was determined experimentally. Two determinations of the specific activity were made for each substance. They agreed within two percent.

The homogeneity of the Th^{232} and U^{238} samples was tested by alpha counting portions of the large foil from which the bombarded sample was cut. These portions were of the same area as the sample and the alpha activities differed by a maximum of three percent from the mean. In the case of U^{235} the inhomogeneity would be expected to be greater since it was made in 21 coats and bakings whereas the other samples were made in 130. As a consequence it was also about 1/4 as thick as the other samples. If the painting is indeed random, then one would expect the inhomogeneity as measured above would be inversely proportional to the square root of the number of paintings. Thus one would expect an inhomogeneity of about 7.5 percent for the U^{235} sample. The following evidence of inhomogeneity was obtained for this sample: a circular area of 1.0 inch diameter was alpha counted and found to be 7.5 percent lower in thickness than that obtained from a 3/8 inch diameter circle in the center of the 1.0 inch diameter sample. The 3/8 inch diameter sample was the one used in the excitation function experiment. The thicknesses of the targets were as follows: U^{238}, $.85_0$ mg/cm^2; Th^{232}, $.68_3$ mg/cm^2; and U^{235}, $.19_2$ mg/cm^2. The U^{235} sample contained greater than 95 percent U^{235}.

C. Method

1. Excitation Functions

In the excitation function measurements, operation was as follows: a value of the beam energy was selected by rotating the wheel containing the fine steps of aluminum thickness to the appropriate position. A target was selected with the sample changer. Then the master switch

was turned to the ionization chamber position. This started the charging of the capacity of the ionization chamber circuit, started the scalar operating, connected the ionization chamber circuit to the current integrator, and started the timing clock. When the integrator showed that the capacity had reached the appropriate potential, the master switch was returned to "off" position and the number of fissions and the time was recorded. At full beam energy this process would take about two minutes and several thousand fissions would be obtained. The target was then changed and the process repeated. After all three targets had been bombarded, the energy was again changed by a small amount. In this manner three excitation functions were obtained simultaneously.

At the beginning of each bombardment the number of fissions per unit beam versus the discriminator setting of the scalar was measured. After a certain value of the bias is reached, practically all the fissions are counted and therefore one obtains a fission plateau. Figure 5 shows a typical fission count versus discriminator bias curve. At very low values of the bias setting a point is reached where the pulses due to the beam ionization are counted and the plateau ends. The The beam ionization will always make some pulses due to the fact that the distance AB is not exactly equal to BC. Also nuclear reactions other than fission would cause a condition of unbalance if charged particles were emitted that did not pass through both of regions AB and BC. In order to minimize the number of spurious counts from the beam ionization, the operating point was chosen near the end of the plateau on

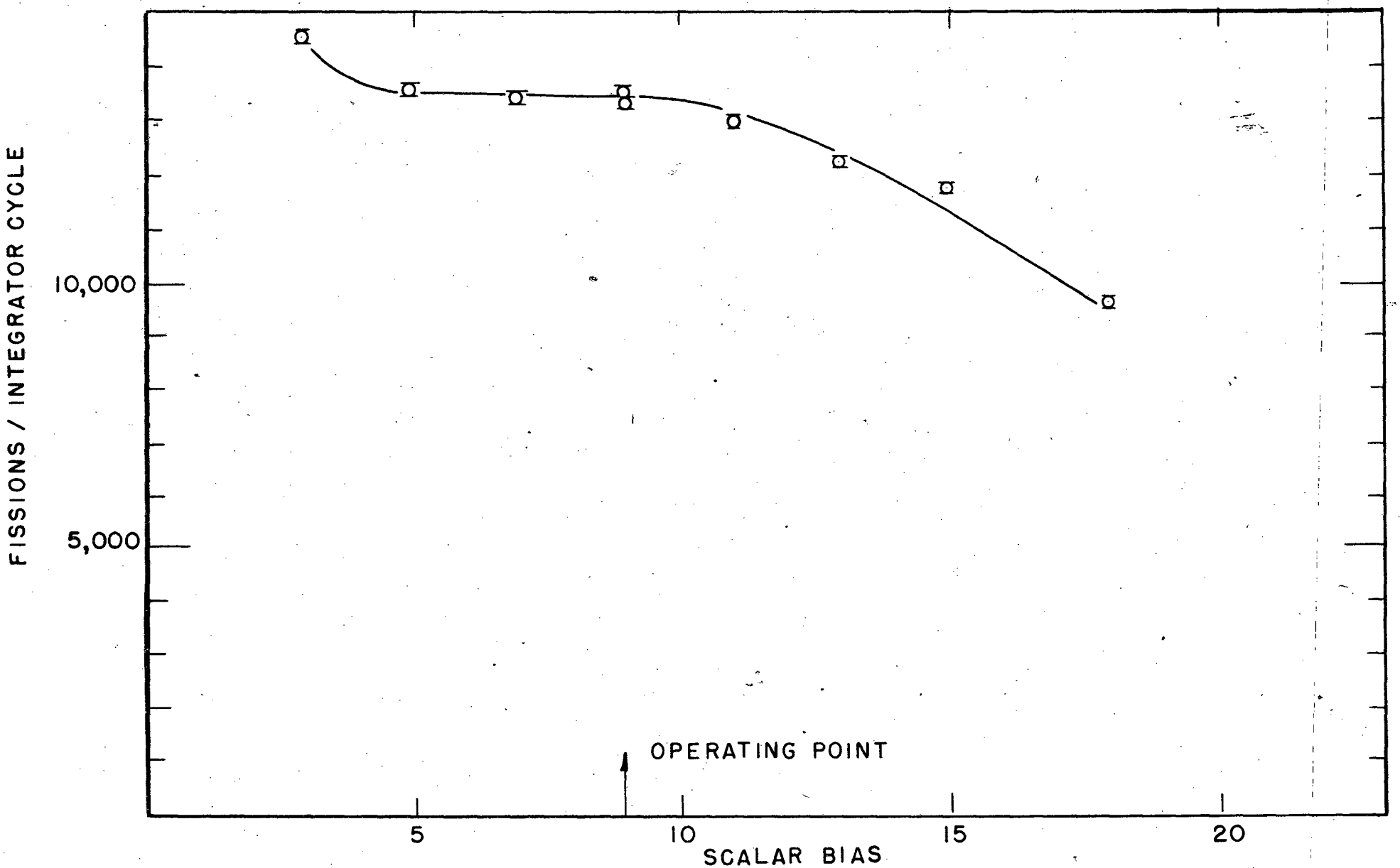

FIG. 5

FISSION PLATEAU, d BOMBARDMENT NO. I

13786-1

the high bias side. Fallacious counts could also arise from sparking of the deflector or of the high voltage on the dees of the cyclotron. These were of greater height than the fission pulses and therefore could not be removed by discrimination. It was therefore necessary to have the cyclotron in a very steady condition if reliable results were to be obtained. This was found to be the case if the cyclotron had been running previously for several days so that it was well baked in.

One of the samples consisted of an aluminum blank of the same thickness (.001 inch) as that upon which the fissionable materials were deposited. By selecting this sample while the cyclotron continued to operate at the same level, it was possible to discover how many spurious counts were being recorded as fissions for a given discriminator setting. If operating conditions of the cyclotron were satisfactory, it was always possible to reduce the number of spurious counts from the aluminum blank to zero.

A second condition on the method of operating the cyclotron was the demand that it produce as few neutrons as possible. To minimize the effect of the neutrons the sample area was made as near the beam area as practicable. Since slow neutrons are very effective for producing fission in U^{235}, the entire fission ionization chamber was covered with 1/32 inch of cadmium. The cadmium resonance and subsequent 1/v capture cross section effectively removes all neutrons below .3 ev energy. Even with these precautions the neutron effect was very sensitive to cyclotron conditions. An upper limit for the neutron fission

background could be obtained for any fissionable sample selected by rotating the energy wheel to the slot which had sufficient aluminum thickness to stop the cyclotron beam. This gives an upper limit because some neutrons are formed in the aluminum in the slot as the beam is stopped there, whereas under conditions in which the beam passes through the slot the number formed there would be less. Some neutrons are always generated in the slot since it in general contains aluminum to lower the incident beam energy. The background was obtained by counting the number of neutron fissions for the same time as the charged particle bombardment. The auxiliary ionization chamber, discussed below, monitored the cyclotron radiation level during the measurement.

It was found that the lowest neutron background was reached when the arc current and voltage of the cyclotron were as low as possible. This is reasonable since then the amount of beam that is circulating between (and some of it striking) the dees is as small as possible. It was further found that the background was in general lowest when the magnetic field of the cyclotron was on the high side of resonance. In practice the auxiliary ionization chamber shown in Figure 3 was found useful for estimating the neutron background. It was merely a large (108 in^3) air-filled chamber with 600V positive potential and a collecting electrode. It was placed near the target chamber of the cyclotron. The collected current was delivered to a direct current amplifier which read 10^{-9} amperes full scale. It was discovered that there was a definite positive correlation between the neutron background and the reading of the d.c. amplifier. This is plausible since it

means that the general density of radiation in the target area increased when the neutron density increased. In this manner a continuous check on the quality of the beam was obtained. When optimum conditions were reached the current from this ionization chamber was of the order of 10^{-11} ampere. A steady beam satisfying the conditions described above was in general more difficult to obtain in the case of alpha-particle bombardments. This may possibly be due to the increased difficulty of forming He^{++} instead of D^{+}. This difficulty with the alpha-particles was reflected in a neutron background which was comparable or greater than that formed by deuterons, although one might expect the opposite to be the case because of the small binding energy of the deuteron. The neutron background was especially important in the case of U^{235}. In this case, although it was only one percent at the full beam energy, it became the limiting factor at threshold energies.

The unsteadiness of the alpha-particle beam was particularly troublesome at the energies near the fission threshold. In this region the fission counting rate is at a minimum and the energy loss by the beam in the fission chamber at a maximum. In order to get sufficient fissions in a reasonable time, it is then necessary to have the beam intensity as high as possible. Actually it was necessary to lower the beam intensity from the high energy value to avoid spurious counts. Now if the beam is unsteady, the beam level must be so low that the intensity on the peak of the fluctuation still does not give spurious counts. If the beam is very unsteady this may well demand intensities

that give quite poor fission statistics. Furthermore a very occasional larger burst of ions from the cyclotron arc source would easily invalidate the result under these conditions.

2. Measurement of the Average Energy Required to Form an Ion Pair

In each excitation function bombardment, data was also taken to find the number of ions pairs produced by one of the beam particles in passing through the ionization chamber. This was done by turning the master switch to the Faraday cup (F.C.) position so that the integrator measured the voltage on the Faraday cup. In the meantime the ionization chamber was charging its circuit. After the Faraday cup had reached an appropriate potential, the energy wheel was turned so as to stop the beam. After grounding the Faraday cup and integrator, the master switch was turned to the ionization chamber position and the potential of its condenser was determined. Photographs of the beam were taken at the entrance to the Faraday cup to check the alignment of the apparatus. The multiplication (number of ions produced by one beam particle) produced in the ionization chamber is then:

$$M = \frac{C_{I.C.}V_{I.C.}v}{C_{F.C.}V_{F.C.}}$$

where v is the number of charges on the beam particle (v = 2 for alpha-particles and v= 1 for deuterons) C and V refer to the capacities and voltages of the Faraday cup and ionization chamber circuits. If the energy lost by one of the beam particles in the ionization chamber is known, the average number of electron volts, w, necessary to form an ion pair in argon can be determined for the energy region involved.

$$w = \Delta E/M$$

ΔE is the energy loss in the ionization chamber in electron volts and M is the quantity referred to above. In this experiment ΔE was calculated from the usual expression for the rate of energy loss by ionization:

$$dE/dx = \frac{4\pi NzZe^4}{mv^2} \ln \frac{2mv^2}{I}$$

This calculation was made by Aron and Hoffman[15] and they used the value 11.5 Z for I. This value was determined by Wilson[7] for protons of 4 Mev. If dE/dx is multiplied by the length of the ionization chamber (1.90 cm), ΔE is obtained. The value of dE/dx depends on the number of argon atoms per cm^3, N. This can be determined from the gas laws if the pressure and temperature of the gas is known. The temperature was measured for each bombardment and the pressure was measured on a mechanical pressure gauge which in turn was calibrated against a mercury column.

3. Beam Energy Determination

In each bombardment the energy of the beam particles was determined. This was done by measuring the current collected by the ionization chamber as a function of the amount of aluminum placed in the beam by rotating the energy wheel. A slot in the second energy wheel was selected that would cause the beam to end in the ionization chamber in the middle of the range of the rotatable energy wheel. Only the cable capacity was used in the ionization chamber circuit (of necessity) and the integrator was used with 10^6 ohms to ground across its input. Thus in this case the integrator became a current measuring device of

10^{-6} amperes full scale. The auxiliary ionization chamber used for the neutron background was useful here in monitoring the cyclotron beam in a rough way. Actually if the cyclotron was running steadily, the beam was sufficiently constant to obtain a reproducable Bragg curve without using a monitor. A Bragg curve obtained in this way is shown in Figure 6. The slope at the end of the curve is not as steep as usual due to the finite depth of the ionization chamber. When the mean range was determined, the beam energy was obtained from the range-energy relation.[15] The loss of energy of the beam in passing through the argon gas was converted to equivalent mg/cm^2 of aluminum by using the previous expression for dE/dx. A similar procedure determined the energy of the beam on the fissionable material.

D. Results

1. Excitation Functions

Figures 7, 8, and 9 show the excitation functions for the three substances investigated. A third bombardment was made with both alpha-particle and deuteron projectiles in order to investigate the fission thresholds. In the case of deuterons the number of fissions observed for a point at full beam energy was about 13,000 for U^{238}, 7500 for Th^{232} and 4300 for U^{235}. In the case of alpha-particle bombardment the corresponding number of fissions was 7300 for U^{238}, 5400 for Th^{232}, and 1800 in the case of U^{235}. The value of the beam energy differed as much as 2.5 percent from run to run. Since the fission cross section rises rapidly with energy, this difference is important if agreement is to be obtained between different bombardments. Besides changing the

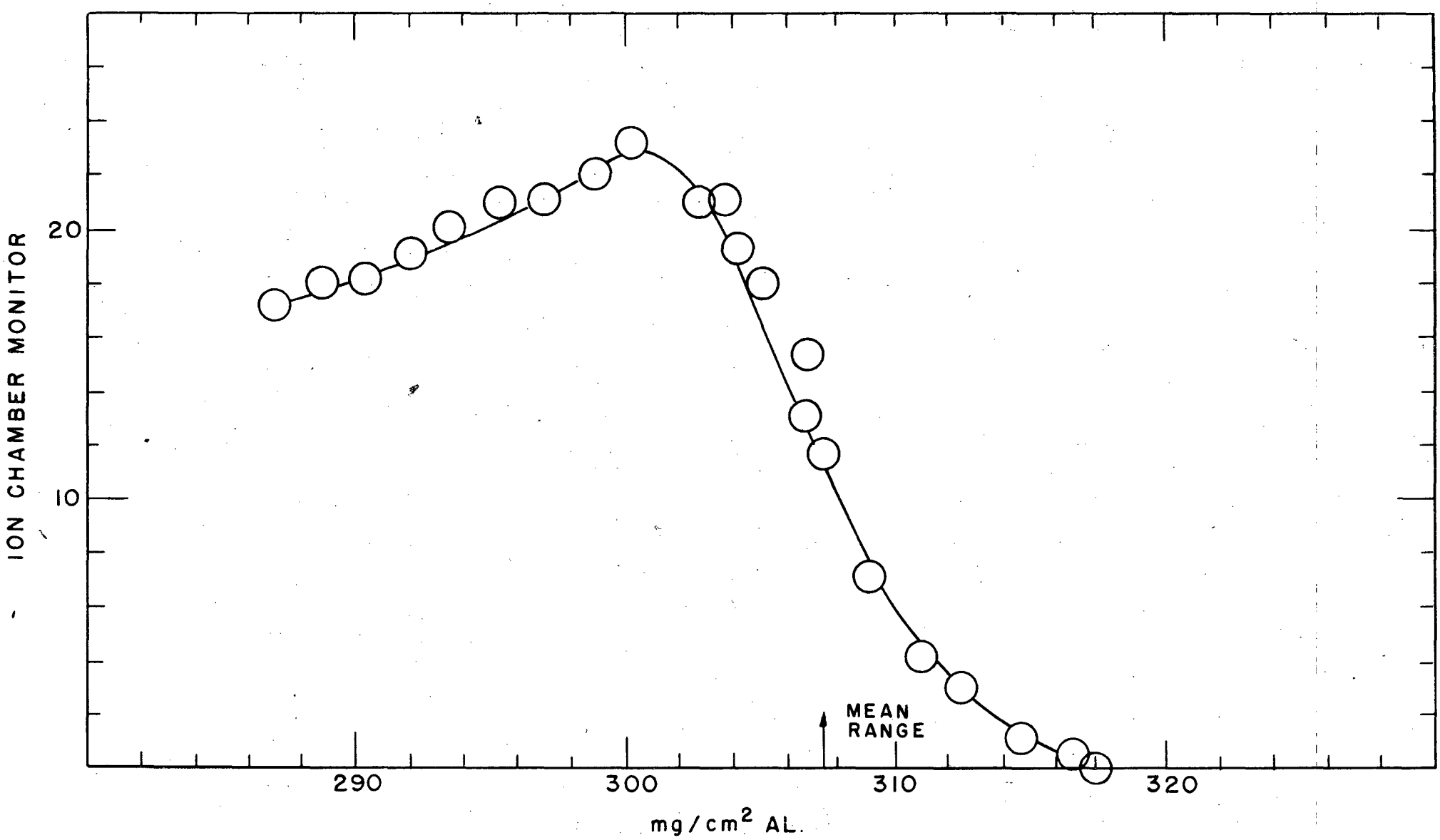

FIG. 6
ENERGY DETERMINATION, d BOMBARDMENT # 2

13785-1

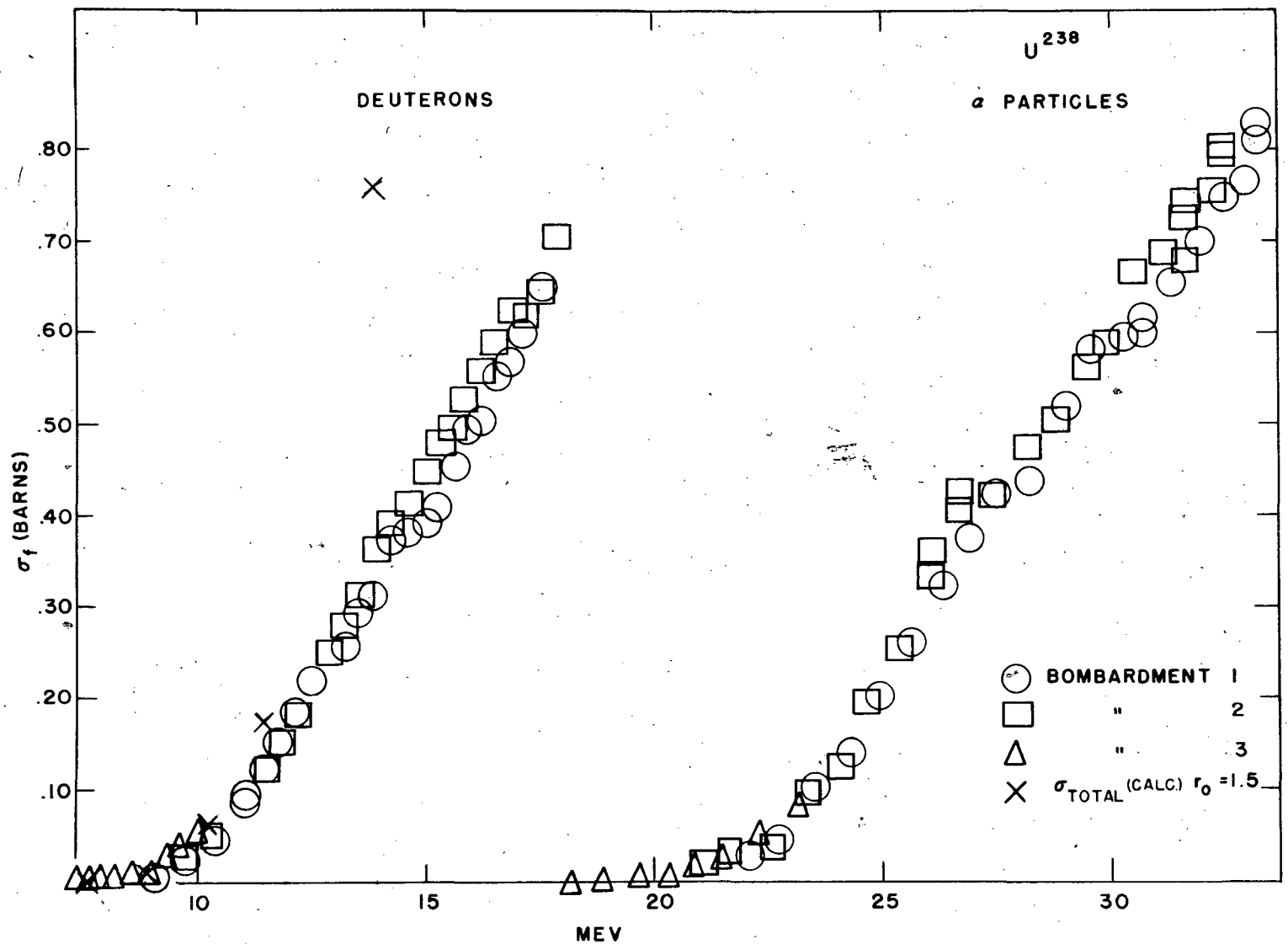

FIG. 7
FISSION EXCITATION FUNCTION

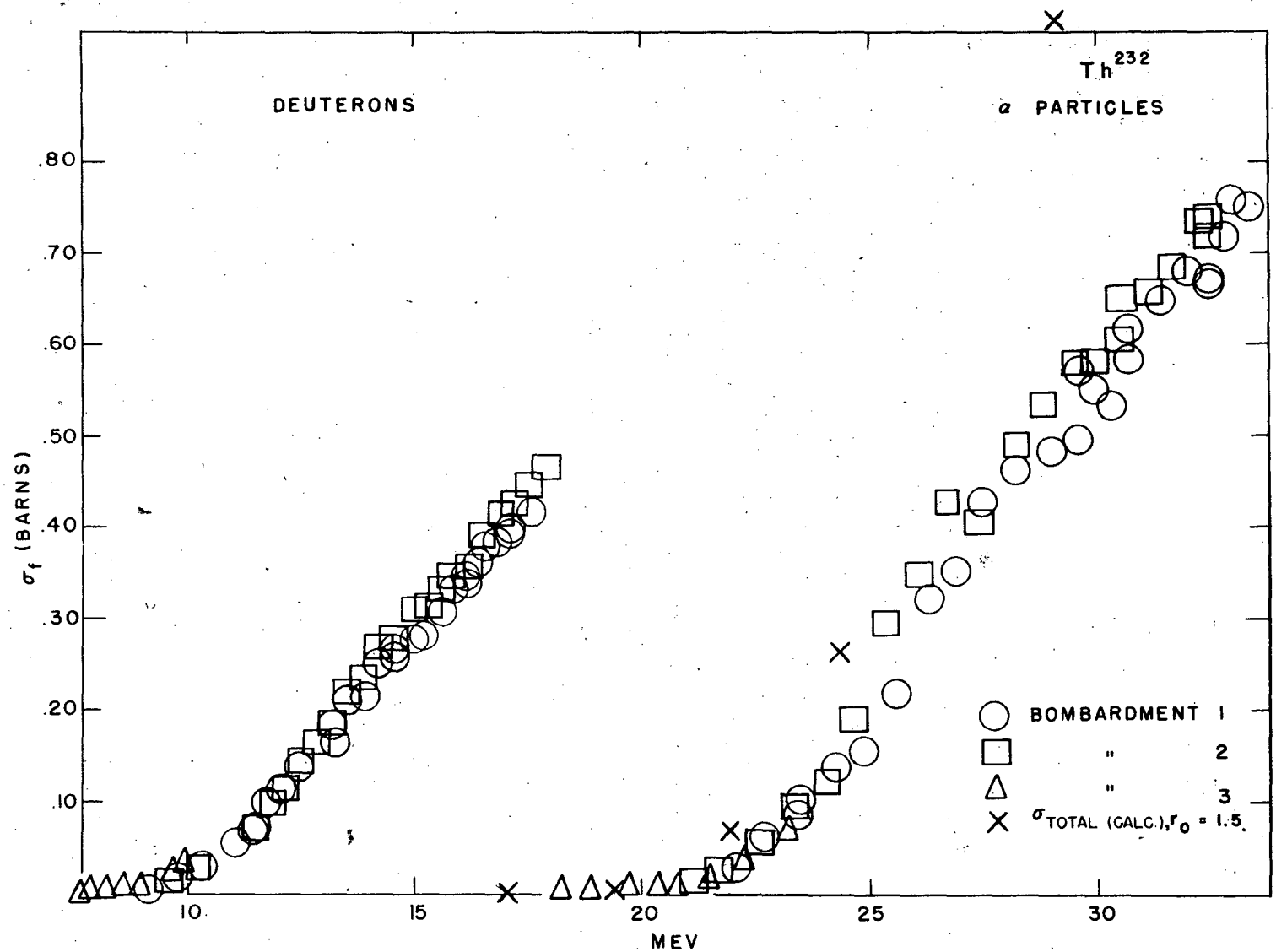

FIG. 8
FISSION EXCITATION FUNCTION

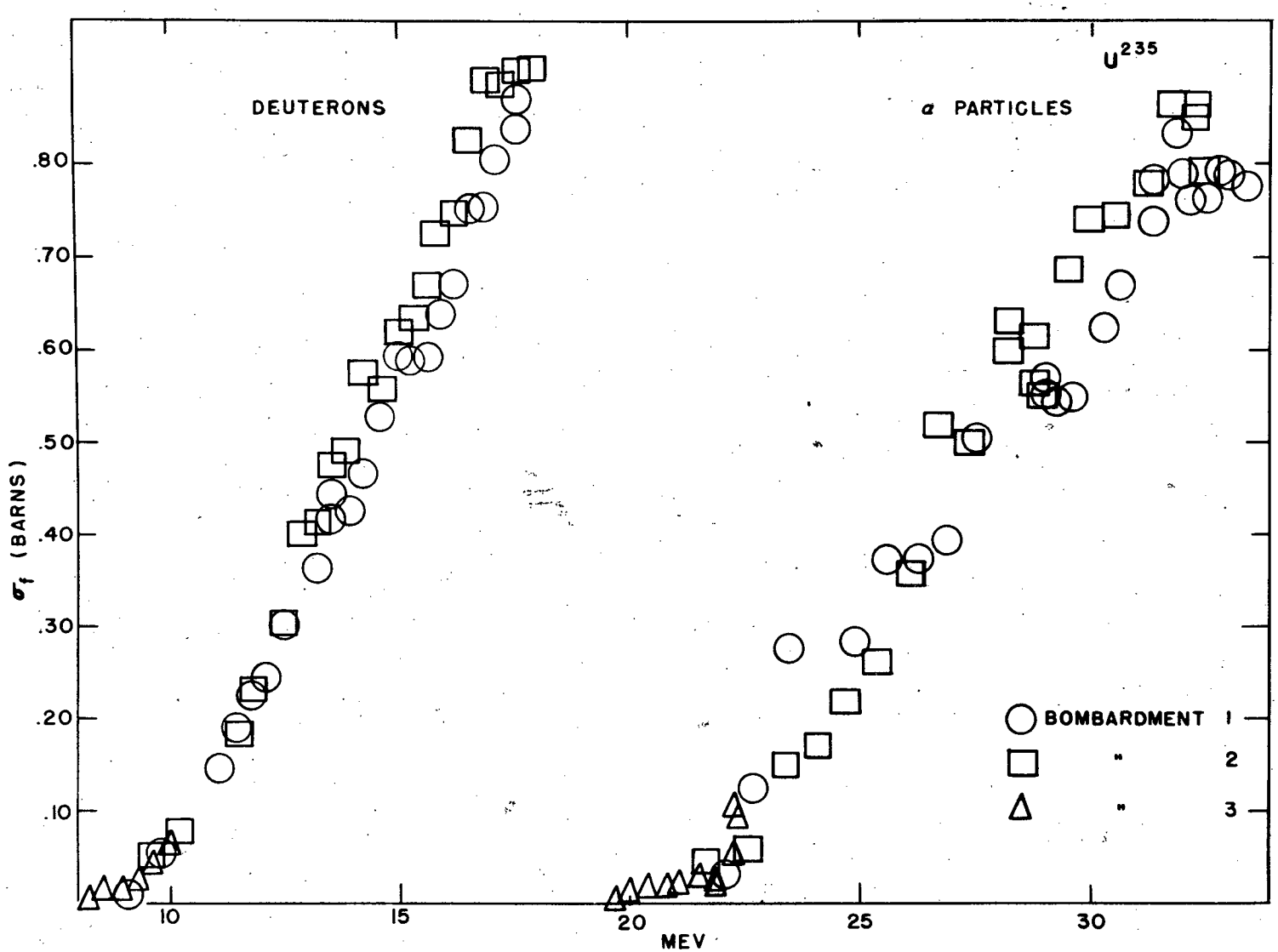

FIG. 9
FISSION EXCITATION FUNCTION

abscissa of the excitation function plot, an error in the energy also changes the ordinate such that if the energy is higher than the correct value, the ordinate is lower and vice versa. This effect arises from the fact that the number of beam particles depends inversely on the energy loss in the ionization chamber.

In the case of deuteron bombardments the neutron fission background was found to be about 2 counts for U^{238}, 0 for Th^{232}, and about 20 for U^{235}. These background figures are given relative to the number of beam particles corresponding to the charged particle fissions quoted above. For the alpha-particle bombardments the neutron fission backgound was about 1 count for U^{238}, 0 for Th^{232}, and about 15 in the case of U^{235}. For the latter substance it was necessary to find the neutron background for each point since the numbers given could vary as much as a factor five at different times during a bombardment. The sensitivity of the neutron background to beam conditions is illustrated by the fact that during one of the alpha-particle bombardments a change of filament in the ion source raised the neutron background by a factor four above the figures given.

Frequent checks were made during the course of a bombardment on the number of spurious counts given by the aluminum blank target. This was especially necessary if the beam energy was changed appreciably or if the fission threshold was being investigated. Beam conditions were always adjusted so that this counting rate was zero.

Figure 10 and Figure 11 show the fission excitation function near the threshold in greater detail. A logarithmic ordinate was used

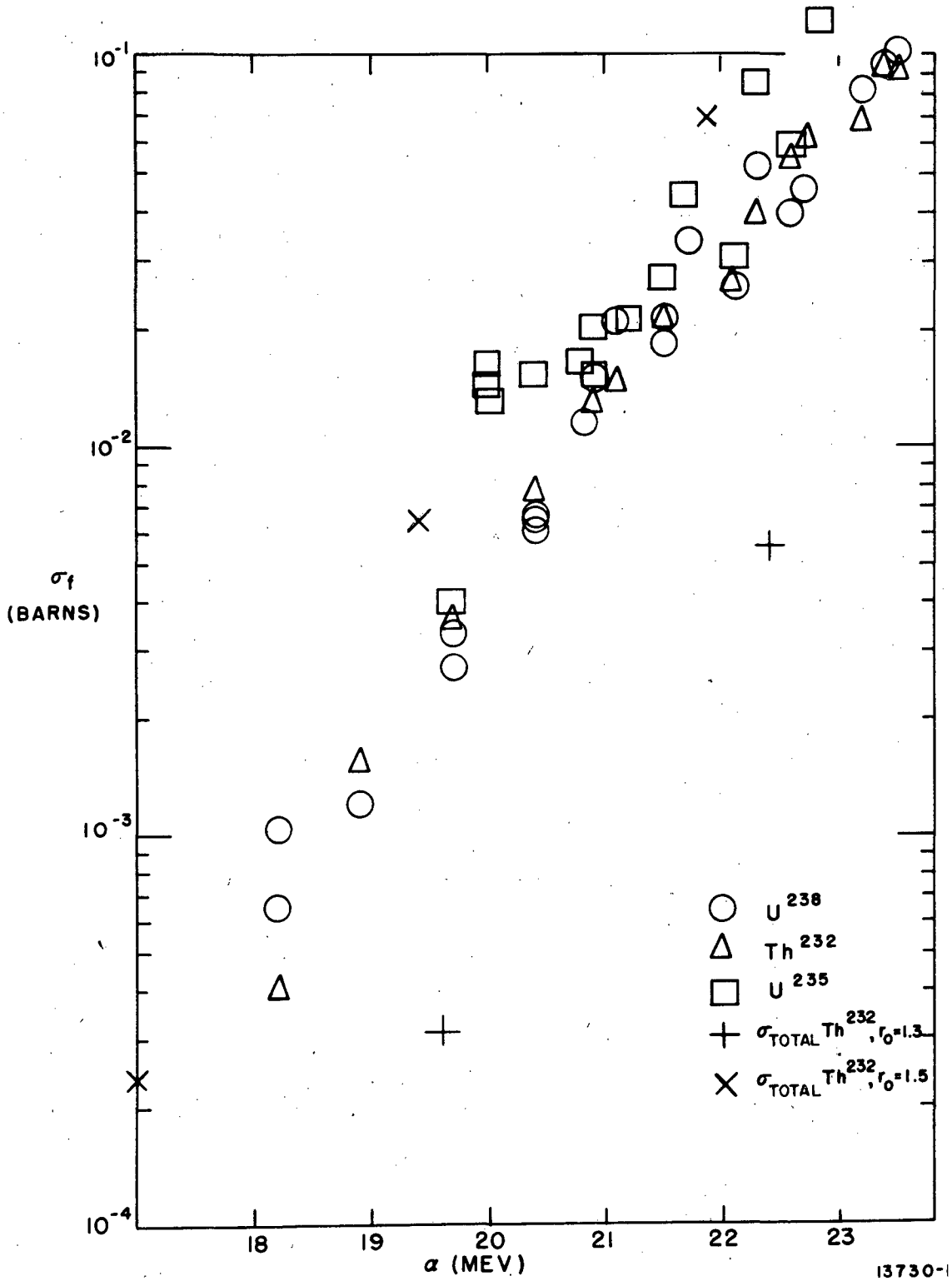

FIG 10

FISSION EXCITATION FUNCTIONS AT THRESHOLD FOR ALPHA - PARTICLES

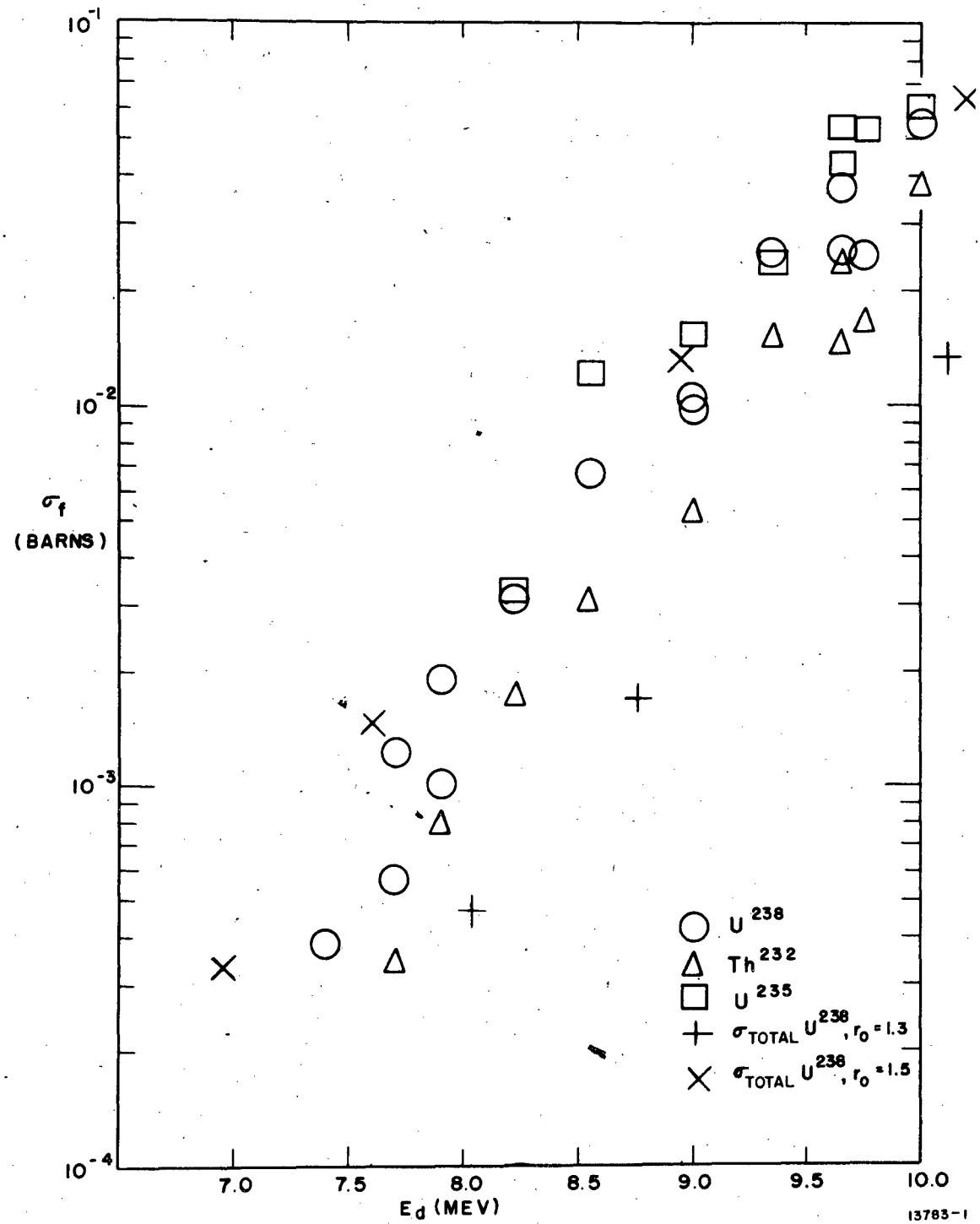

FIG. 11

FISSION EXCITATION FUNCTIONS AT THRESHOLD FOR DEUTERONS

since in this energy region the cross section is limited by penetration of the Coulomb potential barrier. The results shown include the ends of bombardments 1 and 2 as well as the special threshold bombardment, 3. The lowest points on these curves represent the observation of less than 10 fissions and are therefore unreliable. In the case of U^{235} the excitation function was not carried below the energy at which the neutron background became one-half of the total fission count.

2. Value of w

The value of w, the average number of electron volts necessary to form an ion pair, was determined in several preliminary bombardments as well as bombardments that proved unsatisfactory for the determination of the fission excitation functions. The results are tabulated in Table I. Each value given represents the average of several observations for the given bombardment. The results for lower energy seem to show that the value of w is constant over the energy range of the experiment within the experimental error.

Table I

Particle	Energy (Mev)	w (ev)
d	16.9	27.1
d	17.0	28.4
d	17.0	29.7
d	16.0	33.2
d	9.6	31.8
α	30.1	31.6
α	28.8	28.7
α	30.4	30.5
α	29.6	31.0
α	22.4	31.4

The average value of w for deuterons of about 17 Mev is then 29.6 ev, and for alpha-particles of about 30 Mev it is 30.5 ev. These values were used to find the multiplication factor, M, introduced by the ionization chamber when the computation of the fission cross sections was made. The results reported here for w in argon are higher than those given by other investigators. Nicodemus[16] gives 26.9 for 17.4 Mev electrons* and Schmieder[17] reports 24.9 for the alpha-particles of polonium. Fano[18] has given an approximate calculation of w which makes it plausible that w should be fairly insensitive to the energy or type of projectile.

3. Value of $Bi(\alpha, 2n)At^{211}$ Cross Section

In order to have an independent check on the absolut value of the cross section, it was decided to measure the $Bi(\alpha,2n)At^{211}$ cross section with the equipment used in this experiment. The excitation function for this reaction has been extensively studied by Kelly and Segrè.[11] A bismuth foil of known thickness was kindly supplied by Kelly and it was placed as one of the target on the sample wheel. The At^{211} formed by the alpha bombardment is an alpha emitter of 7.5 hour half life. An alpha count of the bismuth sample after a bombardment with a known number of alpha-particles then furnished the cross section for formation of the At^{211}. At the beam energy used (32.4 Mev) At^{210} is also formed with about one-half the cross section as that of At^{211}. Since it decays by K capture to Po^{210}, which has a 140 day alpha activity, it contributes a negligible activity if the sample is counted immediately after bombardment. The alpha count was made using the fission excitation function equipment; it was only necessary to increase

---

* Quoted from Rossi and Staub, LA-1004R, Vol. I, Part II, p. 308.

the gain of the amplifier so that the scalar would be actuated. To provide a check on the reliability of the apparatus as an alpha counter another of the target positions of the sample wheel was provided with a thin sample of U^{238} which had been carefully counted in the laboratory alpha counter. By selecting this target with the sample changer the condition of the apparatus could be checked at any time. In order to obtain a reasonable alpha activity (300 c/m) it was necessary to charge the equivalent 21.7 microfarad condenser in the ionization chamber circuit 15 times. A slight error was introduced here since a finite time is required to turn the master switch to ground position and then return it to the ionization chamber position. However, the time to charge the system to full scale on the integrator was of the order of 40 seconds, so this error was less than one or two percent. The alpha activity was determined to about three percent. The value for the cross section obtained was .73 barns which is in agreement with the result given by Kelly and Segrè[11] of .75 barns.

E. Discussion

1. Comparison with Preliminary Experiment

Comparison of the present results with those found in the preliminary experiment indicates that the assumption made concerning the beta-activity of the complex of fission fragments is incorrect by a factor of about 1.5 to 1.7. The assumption was that the beta-activity of the complex of fission fragments is the same, for a given number of fissions, for charged particle induced fission and for fission produced by slow neutrons. In each case the charged particle fission seems to

give more beta activity in the fragments for the times after bombardment investigated. Newton[19] has investigated the fission yield versus mass spectrum for fission induced in thorium by alpha-particles. He finds that the usual dip in the distribution found with low energy projectiles (neutrons) has risen from 1/600 to 1/2 of the peaks of the distribution. The corresponding new beta activities appearing in the fission fragments might well account for the apparent increase in beta activity per fission. Newton finds the value .6 barn for the fission cross section at 37.5 Mev. This is considerably lower than the results of the present experiment. Part of the discrepancy may be found in that he assumes the incident alpha-particle energy to be 39 Mev whereas measurements made with the collimated beam by Jungerman and Wright[5], by Kelly and Segrè[11], and in the present experiment indicate that the maximum alpha-particle energy available was more nearly 37.5 Mev. This would also account for the discrepancy in the fission threshold reported by Newton. He finds 23 to 24 Mev for the threshold whereas the results of the preliminary experiment and the present one indicate a value of around 21 Mev.

2. Comparison of Fission Cross Sections and Calculated Total Cross Sections

If Oppenheimer-Phillips type interaction is neglected, it is possible to compute the total cross section for formation of the compound nucleus of any pair of target and bombarding nuclei using the method of Bethe[9] and Bethe and Konopinski.[10] This calculation is based on the transmission of the incident particle through the potential

barrier of the target nucleus. The potential consists not only of the coulomb forces but in addition includes the centrifugal potential of the ℓth partial wave. Thus we find

$$\sigma_{tot} = \pi \lambda\!\!\!^{-2} \sum_{\ell} (2\ell + 1) P_{\ell}$$

as given in the discussion of the preliminary experiment. This can also be written

$$\sigma_{tot} = \pi \lambda\!\!\!^{-2} P_o \ell_c^2$$

where P_o is the penetration probability for the s wave ($\ell = 0$) and

$$\ell_c^2 = \sum_{\ell} (2\ell + 1) P_{\ell}/P_o$$

Bethe and Konopinski give limiting expressions for ℓ_c^2 in the cases that $x > 1$ and $x < 1$ where $x = E/B'$. Here E is the energy of the bombarding particle in the laboratory system and B' is the Coulomb barrier adjusted so that E can be used in place of the relative kinetic energy. For $x < 1$

$$\ell_c^2 = g/(2 - x)$$

$$\text{where} \quad g = .262\ (zZaAr_o/[a + A])^{\frac{1}{2}} A^{1/6}$$

z and a refer to the charge and mass of the incident particle and Z and A refer to the same quantities for the target nucleus. $r_o = RA^{-1/3}\ 10^{+13}$ where R is the nuclear radius. For the case considered, deuterons on uranium, $g = 8.9\ r_o^{\frac{1}{2}}$.

$$B' = zZe^2(a + A)/RA$$

$$= 19.0/r_o \quad \text{in this case.}$$

If $E > B'$, $x > 1$ $\quad \ell_c^2 = g^2(x - 1) + .744\ g^{4/3}(2x - 1)^{2/3}$

P_o is determined from the following expression:

$$P_o = e^{-2g\,\gamma(x)}$$

The function $\gamma(x)$ is given in graphical form by Bethe.[20] It is also seen that P_o depends on r_o through the factor g.

For a given choice of r_o these expressions then allow calculation of the total cross section. The value at $x = 1$ can be obtained by interpolation between the two expressions for $x<1$ and $x>1$. Two choices of r_o were taken, $r_o = 1.5$ and $r_o = 1.3$. The resulting curves are plotted on the U^{238} deuteron excitation function for the fission threshold. It is seen immediately that the choice $r_o = 1.3$ is excluded since it predicts a total cross section which is lower than the one observed for fission alone. The choice $r_o = 1.5$ gives a total cross section which is greater than the fission cross section and therefore some competition with the fission process is allowed. On the dubious assumption of no competition one obtains $r_o = 1.43$. One might expect competition to be less below the Coulomb barrier because particle reactions involving the emission of charged particles will tend to be suppressed. However, reactions which emit neutrons are still possible.

Weisskopf[21] has calculated the total cross section for alpha-particles on a thorium target by a procedure which he says is equivalent to the one discussed here. The curves he obtained are plotted on the corresponding threshold excitation function. The threshold curves give results which are very similar to the U^{238} (d, fission) conclusions. Again it is necessary to exclude the choice $r_o = 1.3$. Interpolation for a value of r_o which would make the fission cross section equal to the total cross section between $r_o = 1.5$ and $r_o = 1.3$ gives the value $r_o = 1.45$ ~~as above~~. It should be remarked here that the Coulomb barrier

IV. APPENDIX

1. Cancellation

The cancellation mechanism can be understood in the following way:* a schematic diagram is shown of the fission ionization chamber and the cancellation electrode and their associated circuit.

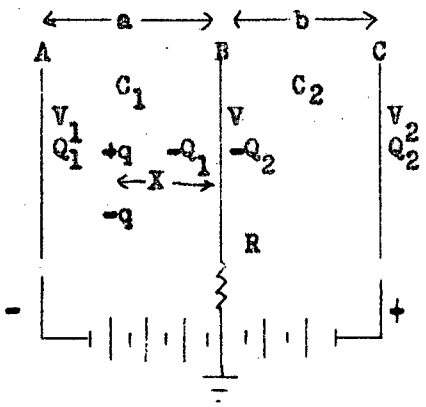

Capacities C_1 and C_2

Voltages V_1, V, and V_2

Charges Q_1 and Q_2

Suppose an ion pair of charges q and -q is generated at a point x in the side AB. Since the mobility of the positive ions is much less than the electrons, we need only consider the electron motion. As an electron moves toward the collecting plate, B, it gains kinetic energy at the expense of the electrical system. This changes the voltage of the collecting electrode by an amount δV. Since the charge on condenser C_2 is $Q_2 = C_2(V_2 - V)$ this means that the charge Q_2 on plate C will change by an amount

$$\delta Q_2 = -C_2 \delta V \qquad (1)$$

The charge on plate B will be assumed invariant in the electron collection time because of the high value of R (15 megohms). When the charge -q has been collected, the sum of the charges on all plates of the condensers C_1 and C_2 must be zero. Thus, allowing for a change in

---

*The author is indebted to Prof. G. C. Wick and S. C. Wright for helpful discussions of this subject.

the charge on plate A, we have the condition:

$$Q_1 + \delta Q_1 + Q_2 + \delta Q_2 + q = -(-Q_1 - Q_2 - q)$$

$$\text{or} \quad -\delta Q_1 = \delta Q_2 \qquad (2)$$

Work is done by the batteries in supplying these charges at their respective potentials. Since the change in electrical energy of the system is equal to the gain in energy of the electron we have,

$$\delta\left[\tfrac{1}{2}C_1(V_1 - V)^2 + \tfrac{1}{2}C_2(V_2 - V)^2\right] + V_1\,\delta Q_1 + V_2\,\delta Q_2 = -q\,\frac{(V_1 - V)X}{a}$$

using (1) and (2)

$$\delta V = -\frac{q}{(C_1 + C_2)}\,\frac{X}{a}$$

Thus, as in the case of the usual ionization chamber, the pulse height is independent of the collecting voltage (if saturation has been reached). The factor $1/(C_1 + C_2)$ is reasonable as this is what one would expect for the case $V_1 = V_2$. That is the plate C merely adds capacity to the system. The fact that the alpha-pulse height was independent of whether $V_1 = +V_2$ or $-V_2$ was checked experimentally.

We now consider the passage of a high energy particle through the entire chamber with the production of practically uniform density of charge per unit length, ρ. We then obtain for the pulse height:

$$\delta V_a = \frac{-\rho}{a(C_1 + C_2)}\int_0^a x\,dx = -\rho a/2(C_1 + C_2)$$

A treatment for side BC similar to the one given for side AB shows that

$$\delta V = +\,qy/b(C_1 + C_2)$$

where again an electron has been collected. y is the distance of the electron from plate C and b is the distance BC. Integration for the

pulse height from a uniform distribution of charge gives for this case

$$\delta V_b = \rho b/2(C_1 + C_2)$$

Thus for complete cancellation it is necessary that a = b. The cancellation is differential as well as integral for this simple case. That is, the pulse height is cancelled exactly for every instant of time, dt, if a = b. This is not the case, for example, if one wishes to measure pulse heights and puts a grid in side AB. Cancellation in this case is complete only after the charges have been collected. This is due to the different form of $d\delta V/dt$ for the side with the grid and the side without.

2. Effect of Magnetic Field on Electron Collection

It might be expected that the operation of an ionization chamber in a magnetic field of 2000 gauss would meet with some difficulty if electron collection is employed. It was shown experimentally that this was not the case by orienting the ionization chamber parallel and perpendicular to the magnetic field and observing that there was no change in the pulse heights from an alpha-particle source. The reason for the ineffectiveness of the magnetic field is the enormous number of collisions made by the electrons with the gas atoms. This is made plausible by an argument of Prof. G. C. Wick. In this argument one assumes that the collisions made by the electron may be represented by a "friction" term in the equations of motion for the vacuum case. Let the electric field in the ionization chamber be directed along the positive x direction and the magnetic field along the positive z direction. Then the equations of motion are:

$$m\ddot{x} = eE + H\dot{y}e/c - k\dot{x}$$

$$m\ddot{y} = -H\dot{x}e/c - k\dot{y}$$

E and H are the electric and magnetic fields; m and e are the mass and charge of the electron; and k is the friction constant.

When the electron has reached a steady drift velocity, $\ddot{x} = \ddot{y} = 0$, $\dot{y}$ may then be eliminated from the equations above and one has

$$\dot{x} = \frac{eE}{k + \frac{H^2e^2}{c^2k}}$$

One may evaluate k from the case H = 0 for then $\dot{x} = eE/k$. By measurement of the rise time of an ionization pulse $\dot{x}$ was measured to be about 10^6 cm/sec. Thus $k = 10^{-6}$ Ee. (E was the same for H = 0 or H $\neq$ 0.) Inserting this value for k in the expression for $\dot{x}$ one obtains

$$\dot{x} = \frac{10^6}{1 + \frac{H^2\ 10^{12}}{E^2\ c^2}}$$

For H = 2000 gauss and E = 470 volts/cm = 1.57 e.s.u. volts/cm one finds

$$\dot{x} = 10^6\ (1 - .0018)\ \text{cm/sec}$$

which is practically the same as the case of no magnetic field. Since the correction term due to H is very small, the procedure used in evaluating k is justified. $\dot{y}$ can also be calculated immediately,

$$\dot{y} = -eH\dot{x}/ck = -10^6H\dot{x}/cE = -.042\dot{x}$$

for the values of E and H given above. Thus the electrons are collected at an angle of about 2.4 degrees with respect to the electric field direction.

V. BIBLIOGRAPHY

1. D. H. T. Gant, Nature 144, 707, (1939)
2. I. C. Jacobsen and N. O. Lassen, Phys. Rev. 58, 867, (1940)
3. G. Dessauer and E. M. Hafner, Phys. Rev. 59, 880, (1941)
4. E. Fermi and E. Segrè, Phys. Rev. 59, 680, (1941)
5. J. Jungerman and S. C. Wright, Phys. Rev. 74, 150, (1948)
6. T. Jorgenson, MDDC No. 467
7. R. R. Wilson, Phys. Rev. 60, 749, (1941)
8. M. S. Livingston and H. A. Bethe, Rev. Mod. Phys. 9, 261, (1937)
9. H. A. Bethe, Rev. Mod Phys. 9, 177, (1937)
10. H. A. Bethe and E. J. Konopinski, Phys. Rev. 54, 130, (1938)
11. E. L. Kelly and E. Segrè, Phys. Rev. 75, 999, (1949)
12. E. L. Kelly, Phys. Rev. 75, 1006, (1949)
13. G. C. Baldwin and G. S. Klaiber, Phys. Rev. 71, 3, (1947)
14. A. W. Vance, Rev. Sci. Inst. 7, 489, (1936)
15. W. A. Aron, B. G. Hoffman and F. C. Williams, UCRL 121 Revised
16. P. B. Nicodemus, Thesis, Stanford University, (1946)
17. K. Schmieder, Ann. der Phys. 35, 445 (1939)
18. U. Fano, Phys. Rev. 70, 44, (1946)
19. A. S. Newton, Phys. Rev. 75, 17, (1949)
20. H. A. Bethe, Rev. Mod. Phys. 9, 165, (1937)
21. V. F. Weisskopf, MDDC 1175, (1947), Lecture Series in Nuclear Physics, LA24, Chapter 36, p. 105.

VI. ACKNOWLEDGMENTS

The author is especially grateful for the stimulating interest of Prof. E. Segrè throughout this investigation and also wishes to thank Prof. G. C. Wick for his helpful discussions of the theoretical problems.

The cooperation of the personnel of the Crocker cyclotron is gratefully acknowledged. In particular, special credit is due the crew for their generous assistance in taking the data.

CONFIDENTIAL