UCRL 3763

UNIVERSITY OF CALIFORNIA

Radiation Laboratory

TWO-WEEK LOAN COPY

This is a Library Circulating Copy which may be borrowed for two weeks. For a personal retention copy, call Tech. Info. Division, Ext. 5545

BERKELEY, CALIFORNIA

DISCLAIMER

This document was prepared as an account of work sponsored by the United States Government. While this document is believed to contain correct information, neither the United States Government nor any agency thereof, nor the Regents of the University of California, nor any of their employees, makes any warranty, express or implied, or assumes any legal responsibility for the accuracy, completeness, or usefulness of any information, apparatus, product, or process disclosed, or represents that its use would not infringe privately owned rights. Reference herein to any specific commercial product, process, or service by its trade name, trademark, manufacturer, or otherwise, does not necessarily constitute or imply its endorsement, recommendation, or favoring by the United States Government or any agency thereof, or the Regents of the University of California. The views and opinions of authors expressed herein do not necessarily state or reflect those of the United States Government or any agency thereof or the Regents of the University of California.

UCRL-3763
Biology and Medicine

UNIVERSITY OF CALIFORNIA

Radiation Laboratory
Berkeley, California

Contract No. W-7405-eng-48

EFFECTS OF CHRONIC EXPOSURE TO X-RAYS ON A STEADY-STATE POPULATION OF SACCHAROMYCES CEREVISIAE

Graeme Perry Welch

(Thesis)

June 1957

Printed for the U. S. Atomic Energy Commission

EFFECTS OF CHRONIC EXPOSURE TO X-RAYS ON A STEADY-STATE POPULATION OF SACCHAROMYCES CEREVISIAE

Contents

Abstract 4

I. Introduction 5

A. Chronic Irradiation Experiments on Various Biological Materials 6
1. Several Mammals 6
2. Drosophila, Maize and Tradescantia 6
3. Yeast and E. coli. 7

B. This Problem 8

II. Continuous-Culture Principles 8

III. Materials and Methods 10

A. Apparatus 10
1. Growth Tube 14
2. Nutrient Supply 14
3. Removal of Excess Cell Suspension. 17
4. Aeration and Agitation 18
5. Population-Density Measurement 18
6. pH Measurement 22
7. X-Ray Irradiation, Automatic Timer, and Dose Monitor 22

B. Calibrations 25
1. Growth-Tube Volume 25
2. Population-Density Recording System 25
3. X-Ray Dose Rate 27
4. pH Meter 30

C. Temperature Control 30

D. Nutrient Preparation 31

E. Procedure for Obtaining Growth Rates 31

F. Procedure for Determining Radiation Resistance for Acute Exposure 31

IV. Results and Discussion 32

A. Demonstration That Normal Growth Rates Are Independent of Population Density 32

B. Demonstration of Sensitivity of Growing Cultures to Environmental Change. 34

C. Effect on Growth of a Limiting Nutrient 36

D. Chronic Irradiation Effects 41
1. State of Aggregation. 41
2. Average Cell Size 41
3. Average Division Rate 42
a. Qualitative Description of Change. 42
b. Presentation of Data 42
c. Comparison with Data of Rubin. 47
d. Comparison with Data of Burns 47
e. Comparison with Data from Chronic Exposure of Animals 49
4. Recovery After Turning off X-Rays 49
5. Acquired Resistance to Acute Exposure 51
6. Respiration Change. 51
7. General Discussion of Continuous Radiation Effect 52

E. Division-Synchrony Attempt by Pulsed Irradiations . . 52

V. Summary 54

VI. Acknowledgments 55

VII. Bibliography 56

EFFECTS OF CHRONIC EXPOSURE TO X-RAYS ON A STEADY-STATE POPULATION OF SACCHAROMYCES CEREVISIAE

Graeme Perry Welch

University of California
Radiation Laboratory
Berkeley, California

June 1957

ABSTRACT

An improved apparatus for the continuous culture of yeast in liquid media under nutrient flow-rate control has been developed, and the effects of continuous exposure to 85-kv x-rays on the division rate of diploid S. cerevisiae have been studied. Dose rates up to 6150 r/generation were used (approximately 2000 r/hr), and exposure to radiation in the longest run covered 115 generations. The accumulated dose to the ancestral populations was approximately 4×10^5 r. When the radiation was turned on, the steady-state division rate decreased over a period of several generation times before a new steady state at a lower division rate became established. Exposure to radiation increased the cells' average size, which then appeared to have a much greater range than without the radiation. On removal of irradiation from a steady state at 6150 r/generation, the division rate returned to normal in approximately eight generation times.

Steady states with continuous exposure to radiation were established twenty-one different times, and the results are presented graphically. The decrease in division rate with dose rate is nearly linear at 1×10^{-4} hr^{-1} r^{-1} generation out to about 2500 r per generation. Then it tends to level off up to 6150 r/generation. In terms of generation time, a dose rate of 6150 r/generation time, which kills approximately 13% of the cells, results in an approximately 2 1/2-fold increase in generation time.

Without irradiation and with insufficient nutrient flow to maintain a steady state at maximum division rate, the population density went through a series of damped oscillations before attaining a new steady state. This unusual observation is discussed.

EFFECTS OF CHRONIC EXPOSURE TO X-RAYS ON A STEADY-STATE POPULATION OF SACCHAROMYCES CEREVISIAE

Graeme Perry Welch

University of California
Radiation Laboratory
Berkeley, California

June 1957

I. INTRODUCTION

In the course of evolution all life has been continually exposed to a sea of penetrating ionizing radiations, and it is likely that this has influenced the rate of evolution and also the levels of closed populations. For a long time the radiations, due only to cosmic rays and natural radioactivity, had remained low, but at present the average level, though still low, has risen, and it probably will continue to rise as a result of scientific and technological development.

Most experience with radiation so far has indicated that when applied acutely it is detrimental to life, causing a decrease in fertility, a decrease in cell-division rate, an increase of lethal mutations, and a general slowing of biological processes. Although much recent work concerns continuous exposure to radiations, the question still remains largely open: to what extent can a population of living organisms adapt itself to a new environment at a higher radiation level? Snyder has recently reemphasized this in a consideration of "What We Most Need to Know."[1]

The magnitude of the general problem of radiation effects is shown by the tremendous size and variety of the literature on the subject. Although most of the work concerns acute radiation problems, observations on effects of chronic irradiation are indeed an important part and, as with acute irradiation effects, date almost from the discovery of the radiation phenomenon itself.[2] Recently the stimulation brought about by the increasingly common use of nuclear processes and high-energy particle accelerators, together with improved measuring techniques and better-understood biological material, have led to many significant chronic-irradiation experiments. Following is a brief discussion of several of these, covering a wide range of experimental material, which form a background for the work described here.

A. Chronic-Irradiation Experiments on Various Biological Materials

1. Several Mammals

Rats, dogs, rabbits, and monkeys have been exposed to small daily doses of 250-kv x-rays by Boche.[3] In many cases the irradiations were continued for duration of life at doses ranging from 0.1 to 10 r per day. He derived a generalization, for all dose rates and all species, that the increase in mortality* per r was very nearly the same, lying in the range 1.1 to 2.4×10^{-4} per r. Data on mice by Henshaw[4] were included in this generalization. A similar figure of merit resulting in a species generalization has been presented by Sacher[5, 6] and Brues and Sacher.[7] Their theory was developed on the assumption that lethality is a result of a linear combination of the many physiological responses of the system to irradiation. In summarizing their experiments and those of ten other workers, including Lorenz et al.,[8] they concluded that for mouse, rat, rabbit, dog, guinea pig, and monkey the dose sensitivity of the lethal process is essentially constant.

In an attempt to better understand chronic irradiation effects at the level of damage to specific tissues, Spargo et al. have given mice daily γ-ray doses of 1.1, 4.4, and 8.8 r, each dose distributed over an 8-hr period.[9] Animals, sacrificed bimonthly, were analyzed for changes in ovaries, testes, thymus, spleen, bone and bone marrow, mesenteric lymph node, and blood. Many qualitative changes were noted, but at the lowest dose rate only ovary and thymus showed changes. Thus mice exposed to 1 r/day clearly show damaging effects.

Mutation-rate studies on mice in a continuous x-ray field have been made by Russell.[10] By mating irradiated wild type with a strain homozygous recessive at seven loci, he found the mutation rate to recessive visibles to be $(25.0 \pm 3.7) \times 10^{-8}$ per r per locus.

2. Drosophila, Maize, and Tradescantia

Most of the work on induced mutation rates with chronic irradiation exposure have been made on lower organisms, which could be handled without the large facilities required for the studies on mammals. Pioneer studies on chronic low-level γ-ray irradiation of Drosophila were made by Caspari and Stern[11] and Uphoff and Stern.[12] They found 0.002% induced sex-linked lethal mutations per r, and concluded from these and earlier experiments[13] that the effect was linear with dose and had no threshold. Singleton[14, 15] and Sparrow and Singleton[16] irradiated maize continuously with cobalt-60 γ rays, and observed gametic mutations of endosperm characters. Their results, not in agreement with those above, gave an exponential relationship of mutation rate vs dose rate up to 127 r/day, with a threshold rate of 5 r/day. On other experiments with chronic γ-ray irradiation, Sax

---

* Mortality is the fraction of the animals that have died. Increase in mortality per r is the slope of the curve of mortality rate vs dose rate.

obtained rather different results.[17] His observations on chromosome aberrations in microspores of Tradescantia showed increasing effect with time up to approximately 3 weeks, but plateaued thereafter with no further increase up to 22 weeks.

Viability studies have been made on Drosophila by Wallace, who exposed large populations continuously to radium γ rays and periodically tested the second chromosome of the population for mutations that affect viability.[18] He concluded that the accumulation of chromosomes deleterious when homozygous does not necessarily result in a continual decline in viability of the heterozygote carriers. In other chronic-irradiation studies on Drosophila, Buzzatti-Traverso has concluded that an increased mutation rate may be of significance for bringing about a more rapid change under artificial or natural selection.[19]

3. Yeast and E. coli

In all the chronic irradiation experiments mentioned so far, the measured effect was obtained over a relatively short term, that is, times of the order of only one to a few life spans. Long-term accumulative irradiation effects, as well as changes, such as growth, that require several generations to gain steady state, are best measured on unicellular organisms in which the generation time is fairly short. Although observations were limited to a few generations at most, the irradiation of batch cultures has produced some data. Among these are comparisons by Spoerl et al. of α and x-ray irradiation of yeast and E. coli.[20, 21] They noted that, with sublethal doses, division in E. coli was inhibited, but not growth, while in yeast also division was inhibited but growth was only retarded. Growth was determined from dry weights of aliquots. It is interesting to note that Brace earlier observed in yeast a similar division inhibition, with marked cell-volume increase due to single-dose x-ray irradiation.[22] He showed this to be due largely to nonselective increase in cell constituents and not merely due to water uptake. With special techniques, Rubin has very successfully extended batch-culture procedures to 14 generations; he observed that the growth rate of E. coli was unaffected by continuous exposure to P^{32} β rays or x-rays, and that only the lag period was proportionately lengthened.[23] Here growth was determined by increase in optical density of the suspension of cells.

In the irradiation of batch cultures not only are measurements limited to a few generations, but also during this time the cell's environment is changing, often drastically. Smith has pointed out how really variable the results of such experiments may be, owing to dynamic environmental conditions.[24] Thus, as might be expected, the best conditions for chronic irradiation measurements over many generations are obtained in a continuous-culture apparatus such that the population of microorganisms and its environment are in a steady state. Although the idea of continuous culture had been applied earlier to the problem of crystal growth,[25, 26] the principles involved were rediscovered and applied to microbial growth independently by Monod[27] and Novick and Szilard[28] in 1950 for measuring spontaneous mutation rates. In addition, these workers introduced the principle of internal control on the growth rate by limiting the concentration of an essential nutrient. Since then a number of experiments employing continuous-culture machines have been performed (cf. References 29-35), but to the writer's knowledge only Novick[36] and Marcovich[37] have measured radiation effects. Novick grew several strains of E. coli with tryptophane control

and exposed them to chronic low-level uv and Co^{60} γ radiation as well as to a number of chemical mutagenic agents. He observed mutants to resistance to T5 and T6 phage, and showed a linear dependence of mutation rate on uv intensity and a marked increase in mutation rate with γ-ray intensity. In irradiating a lysogenic strain of E. coli with radium γ rays for 60 generations, Marcovich found that lysogenicity reached new higher values depending on dose, but he had not sufficient data to establish the functional dependence.

B. This Problem

The work presented here was undertaken to

(a) develop a satisfactory continuous-culture apparatus for yeast cells,
(b) study the response of yeast cells to continuous culture,
(c) measure the functional dependence of division rate on x-ray dose rate with continuous exposure,
(d) observe for evidence of evolution under conditions of long-term irradiation, and
(e) seek possible synchrony in division by means of once-per-generation irradiation pulses,

with the hope of adding to the information on radiation damage, something that may contribute to solution of the complex problem of cell-division delay caused by irradiation.

II. CONTINUOUS-CULTURE PRINCIPLES

The following development through Eq. (4) differs only in minor details from that presented by several others (cf. References 38-41). The remainder through Eq. (14) is original.

Continuous culturing of microorganisms at constant volume requires that a liquid culture be maintained with a continuously flowing fresh nutrient input and an equal output rate of spent nutrient and cells, mixing at all times being instantaneous and complete. In order to derive the equation describing this operation, consider a culture volume V containing n cells per cm^3 in active (i.e., logarithmic) growth, and assume that the life of each cell is long compared with the washout time. In a homogeneous population at any time t, cells are being produced at a rate that is proportional to their existent number, and cells are being removed by washing out at a rate, not necessarily the same, that is also proportional to the existent number. The time rate of cell production is described, as in batch culturing, by

$$(dn/dt)_g = \alpha n, \qquad (1)$$

where α is the division rate per unit time characteristic of the microorganism, and subscript g indicates growth process. For cell removal, consider the removal of a small volume dv which contains dn cells, and instantaneous replacement of dv by incoming fresh nutrient so that the total volume V remains constant. Then, since the number of cells is proportional to the volume, we have

$$dn/n = dv/1\ cm^3,$$

and if the removal is done in time dt, $(dn/ndt)_w = -dv/dt$, where subscript w indicates washout process. Now, dv/dt is the instantaneous rate of volume change per unit volume of the growth tube,

and the corresponding value per total volume is

$$V\, dv/dt = w,$$

where w is the rate of nutrient flow. Thus, for cell removal, the instantaneous time rate of population change is

$$(dn/dt)_w = (-w/V)n = -\beta n. \qquad (2)$$

The independence of Eqs. (1) and (2) leads to a net rate of population change

$$dn/dt = (dn/dt)_g - (dn/dt)_w = (\alpha-\beta)n. \qquad (3)$$

For steady state, we have $dn/dt = 0$, and therefore

$$\alpha = \beta. \qquad (4)$$

The division rate may also be obtained from non-steady-state conditions, for integration of Eq. (3) leads to

$$\ln n = (\alpha-\beta)t + \text{constant}, \qquad (5)$$

and substituting conditions such as may easily be read from a semilog plot of n vs t, e.g., $n_2 = 2\, n_1$, in Eq. (5) leads to

$$\ln 2 = (\alpha-\beta)\, t^{o}_{1/2}\,, \qquad (6)$$

where $t^{o}_{1/2}$ is the observed time for the population density to change by a factor of two. Then we have

$$\alpha = 0.693/t^{o}_{1/2} + \beta. \qquad (7)$$

With the exception of the radiation, all physical and chemical conditions upon which the division rate α depends are either kept constant or kept within limits where α is uninfluenced.

Chronic exposure to irradiation slows the division rate and simultaneously induces a small percentage of division inhibition. For the purposes of analysis the two effects may be separated as follows:

Let n = concentration of viable cells,

m = concentration of nonviable cells,

p = n + m = total concentration of cells,

α = division rate of n,

γ = rate of inhibiting division of n,

β = washout rate for both n and m.

Then $dn/dt = \alpha n - \gamma n - \beta n = (\alpha-\beta-\gamma)n,$ (8)

$dm/dt = \gamma n - \beta m,$ (9)

$dp/dt = dn/dt + dm/dt.$

For steady state we have $dp/dt = 0$. This requires

$$dn/dt = -dm/dt = 0. \tag{10}$$

Other conditions on n and m satisfying $dn/dt = -dm/dt$ are possible. Any condition of this sort, however, must eventually disappear, as both n and m are bounded by environmental conditions.

From Eqs. (8), (9), and (10) we have

$$\alpha = \beta + \gamma, \tag{11}$$

$$\gamma n = \beta m \text{ or } \gamma/\beta = m/n, \tag{12}$$

$$(\gamma + \beta)/\beta = (m + n)/n. \tag{13}$$

Substituting Eq. (11) in (13) we obtain

$$\alpha = \beta(m + n)/n. \tag{14}$$

Thus the division rate of the viable cells may be obtained from the washout rate and the fraction of viable cells, $n/(m + n)$.

III. MATERIALS AND METHODS

Continuous propagation of the diploid yeast Saccharomyces cerevisiae (strain SC-6, the same as used by Zirkle and Tobias[42]) is maintained in an apparatus constructed on principles described by Monod[27] and Novick and Szilard,[28, 38] who obtained control of their organism's growth rates by limiting the amount of an essential nutrient. Operation so that the organism's own maximum synthesizing capacity limits its growth rate is possible, however, provided that the nutrient flow rate be made continuously and readily variable over a wide range. In the experiments reported here, use of the yeast's own maximum synthesizing capacity was considered essential in order to lessen the complication in interpretation of the chronic irradiation effects. The question of chronic irradiation effects upon the utilization of various nutrients may be answered by future experiments using nutrient-limited continuous culturing.

A. Apparatus

Figure 1 is a schematic of the setup as it finally evolved. Associated with the growth tube G (Subsection 1 below) are six service systems performing the functions of

2. nutrient supply,
3. removal of excess cell suspension,
4. aeration and agitation,
5. population-density measurement,

Figure I.
SCHEMATIC OF CONTINUOUS PROPAGATION EQUIPMENT

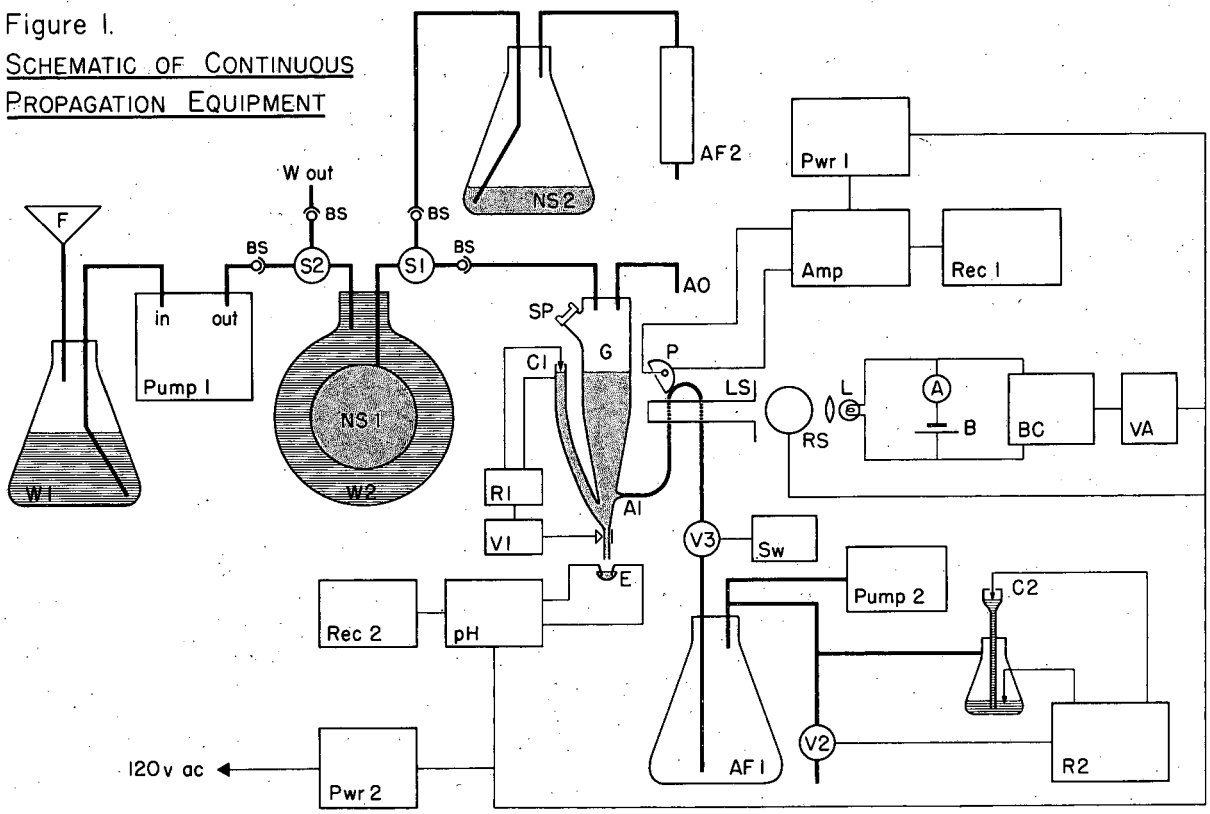

Key for Fig. 1: Schematic of Continous Propagation Equipment

A	ammeter, 0–10 amp dc
AF 1	air filter, 1-liter flask stuffed with cotton
AF 2	air filter, 1.5-by-8-in. glass tube stuffed with cotton
AI	air inlet for stirring and aeration
AO	air outlet-glass tubing looped to prevent contamination of culture
Amp	stabilized, band-pass amplifier (see text)
B	two 6-volt 120 AH storage batteries in parallel
BC	battery charger (Mallory 6AC6-3)
BS	standard ball-and-socket connections
C 1	contacts in side arm of growth tube for Volume control
C 2	contacts in water column for air-pressure control
E	pH electrodes (see text)
F	funnel
G	growth tube (see text)
L	light source, adapted from Spencer universal microscope illuminator; 6.5 v, 2.75-amp bulb, 3-lens condensing system
LS	light shield
NS 1	nutrient solution reservoir, 2.5-liter rubber breathing bag (E and J B-204)
NS 2	nutrient-solution sterilizing flask, 4 liter, containing 2 liter
P	photoelectric cell type 922
pH	pH meter (Beckman model H-2)
pump 1	water pump in medium supply system (see text)
pump 2	air pump, aquarium type (Marco model A)
pwr 1	voltage-regulated dc power supply (see text)
pwr 2	voltage-regulated ac power supply (Sorenson model 1000-S)
R 1, R 2	electronic relays (see text)
Rec 1	graphic recorder, Esterline-Angus 0–5-amp ac
Rec 2	graphic recorder, Leeds and Northrup Speedomax, 0–10-mv dc
RS	rotating shutter (see text)

S 1, S 2	three-way stopcocks
SP	sampling port
Sw	motor-driven switch, on for 5 sec. once per minute
V 1	magnetically operated valve (see text)
V 2, V 3	magnetically operated valves (Skinner V5-100 ST)
VA	variable autotransformer
W 1	water reservoir, 2-liter Erlenmyer flask
W 2	water reservoir, 6-liter spherical flask
W out	connection for removing water in order to fill NS 1 from NS 2

6. pH measurement,
7. x-ray irradiation, dose-rate monitor, and automatic exposure timer.

Each is described in detail below.

1. Growth Tube

In the course of the first experiments it was found that the tendency for the yeast cells to settle made it impossible to use the overflow-syphon volume-maintenance system of Novick and Szilard[28] or the surface overflow of Northrup[31] or the surface syphon of Monod[27] and Anderson.[32] Even with fairly vigorous agitation of the suspension the differential settling tendency between pairs and fours (the predominant state of aggregation) and the infrequent larger groups of cells was great enough eventually to accumulate clumps at the bottom. Placing the outlet at the bottom, however, selects against clumps, since they are then preferentially removed. It was also found necessary to make the walls smooth and steep, especially where the auxiliary side arms join, in order to prevent cells from becoming lodged and growing into colonies. As a result of these considerations, the growth tube, shown in close-up view in Fig. 2, was fabricated from a 15-ml pyrex centrifuge tube, extended 5 cm at the top in order to eliminate back-contamination to the nutrient supply due to splashing. At the bottom the outlet is of 2-mm capillary tubing, the air inlet A1 (cf. Fig. 1) is of 1-mm capillary tubing, and the level-control arm with contacts C1 is of 6-mm standard tubing. (The exact location of these is discussed more fully in Section IIIB on calibration.) Near the top is a port SP with a puncture-type rubber stopper through which inoculations may be made and samples withdrawn with sterile hypodermic syringes.

2. Nutrient Supply

Positive nutrient feed, with flow rate continuously variable over a wide range, is accomplished by pump No. 1 of Fig. 1 and Fig. 3, a specially constructed two-cylinder reciprocating pump. Referring to Fig. 3, in the upper left corner is a synchronous motor (Bodine KYC-22, 8-watt, 1 rpm) which turns a 0.5-in.-diameter 10-in.-long 40-pitch screw. A split nut rides the screw and works one end of a crossarm which terminates at a small cart between two 10-ml hypodermic syringes. The crossarm's fulcrum, located near the center of the picture, is positioned along the slot in the base plate by a 20-pitch screw beneath the base plate, and operated by the hand crank on the front panel. Connected to the distal ends of the two syringe cylinders are two three-way solenoid valves (Skinner V5-100 ST) which have their inlets and outlets joined by 0.25-in. copper tubing.

In operation one syringe is filling while the other is discharging. A limit switch operates at the extremes of travel which reverses the synchronous motor, releases one valve, and actuates the other.

Sturdy construction and elimination of mechanical play are essential in order to minimize liquid-flow error at reversal. To this end

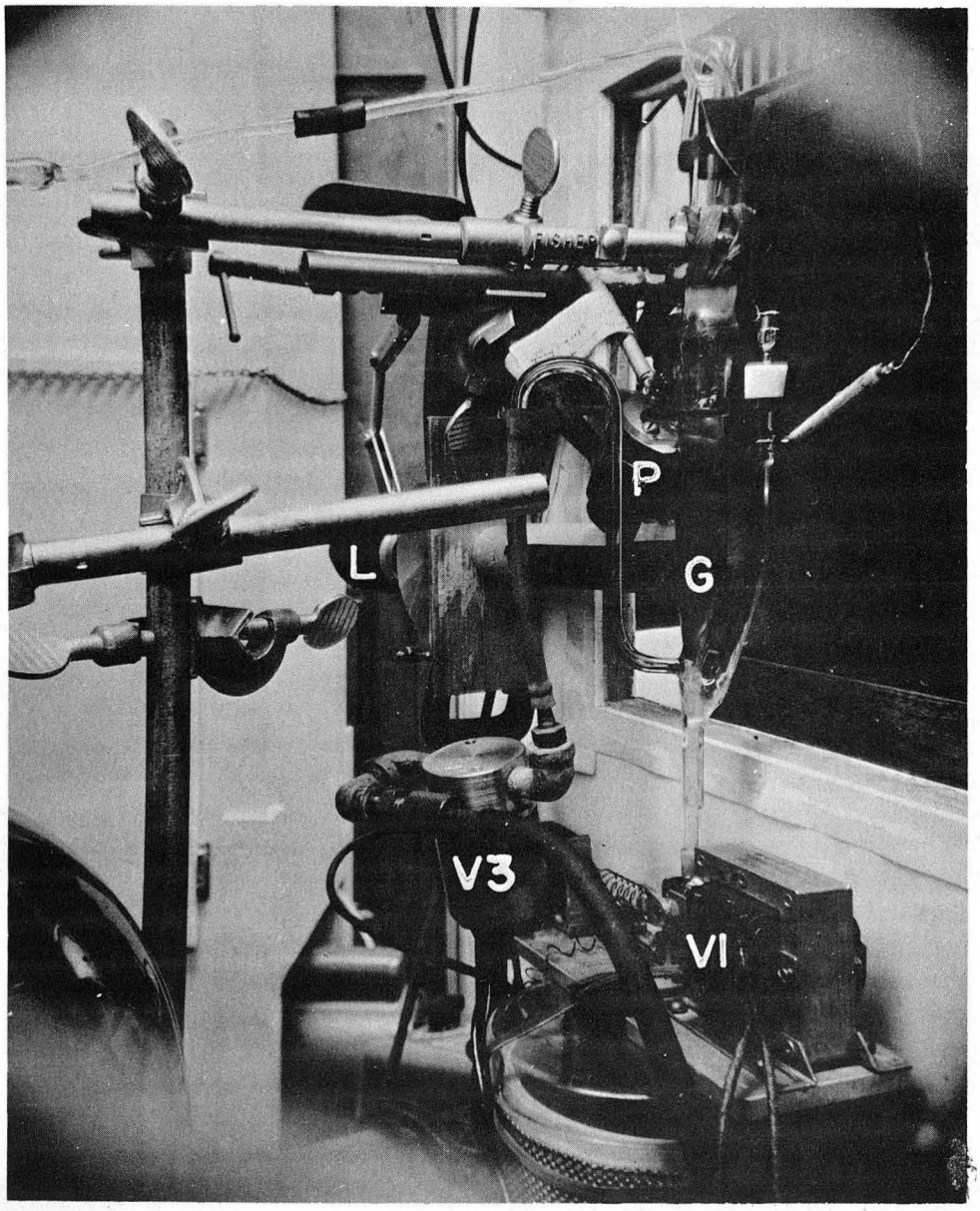

ZN-1741

Fig. 2. General view of apparatus

G	growth tube
V1, V3	values
P	phototube
L	light source and shield

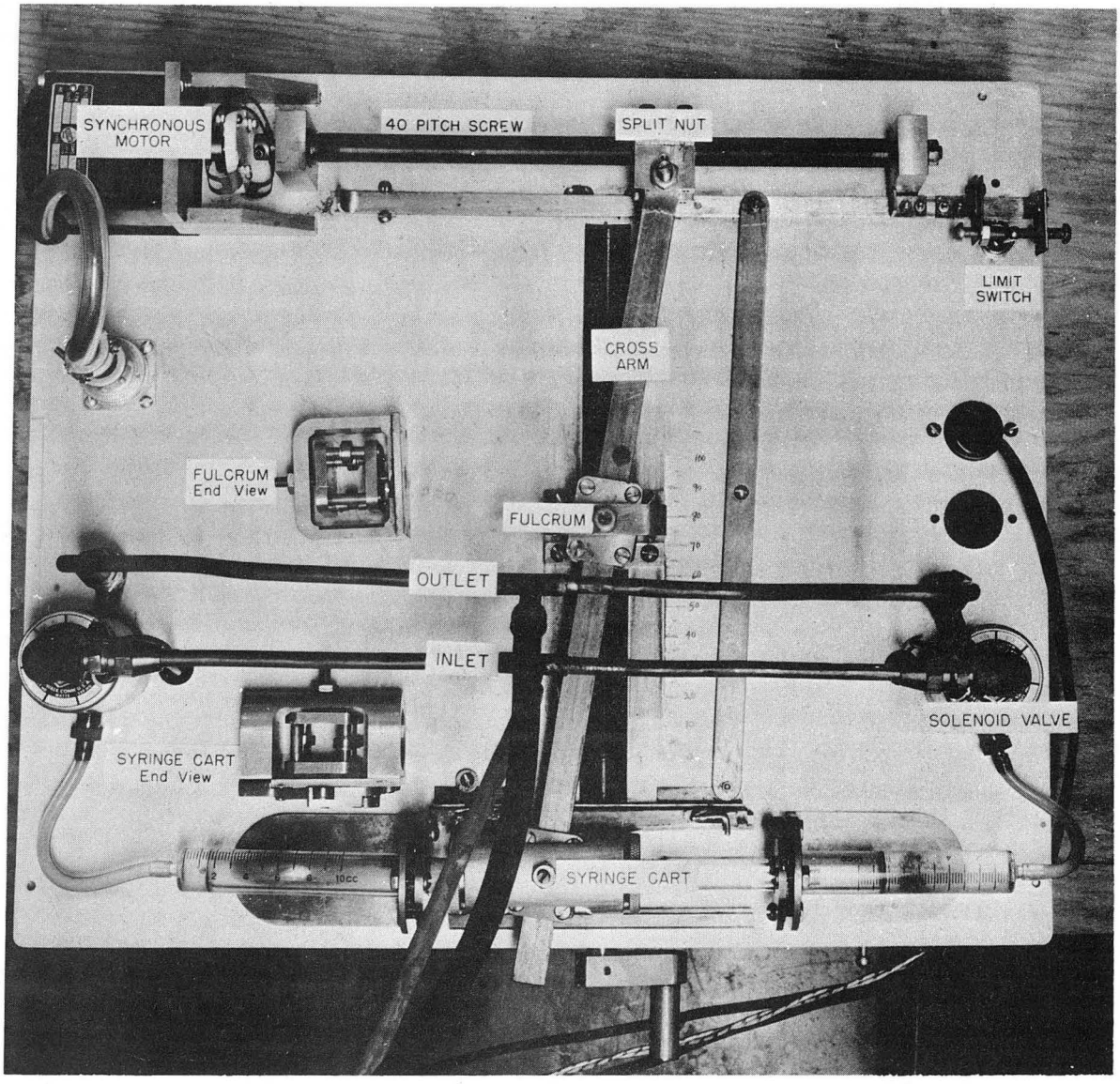

ZN-1742

Fig. 3. Pump for nutrient supply system.

the 40-pitch screw is supported at the left end by ball bearings and at the right end by an adjustable point bearing consisting of a pointed 1/4-28 screw bearing on a center-drilled hole. The split nut is fitted by means of shims for free movement and no play; the crossarm pivots from point bearings at the split nut and passes through bearing carriers mounted at the fulcrum and syringe cart on point bearings; the bearing carriers have three ball bearings (New Departure R-2), one of them spring-loaded, mounted between two plates so as to roll along the crossarm; and the cart runs along a track on three bearing wheels (also R-2), one spring-loaded. As a result of this construction the pause in fluid flow at reversal amounts to one drop (approximately 0.02 ml) as measured at the input to the growth tube.

As mentioned above, the flow rate is varied by shifting the crossarm's fulcrum. The range of motion is such that flow rates from 1.8 to 7 cc/hr are obtainable. In order to obtain higher flow rates, the synchronous motor is arranged for easy exchange; 1.4, 2, 5, and 10 rpm are available as well as the 1 rpm used. The two 10-ml matched syringes were selected from a large stock so that the plungers were interchangeable. The difference in diameter that satisfies this condition is approximately 0.0001 in. This corresponds to 0.04% difference in volume and hence 0.04% difference in fluid-flow rate between the two directions of movement. The actual flow rates were calculated from physical measurements of syringe diameter and crossarm length, using a micrometer and vernier caliper. Errors may reason ably be assumed to be of the order of 0.0002 inch on micrometer measurements and 0.002 inch on caliper measurements; then the error in the flow rate may be of the order of 0.1 to 0.2%, depending on fulcrum position. Relative values of flow rate, however, do not share this error, and depend only on the accuracy of the screws and of the frequency of the ac supply that drives the synchronous motor.

Returning again to Fig. 1, we see that water from reservoir W1 is pumped into the closed 6-liter spherical flask W2, thus displacing nutrient solution from its 2.5-liter rubber bag reservoir NS1 through stopcock S1 to growth tube G. Reservoir NS1 is filled by syphoning from the 4-liter flask NS2 (in which the nutrient solution is sterilized in 2-liter batches) while at the same time excess water in W2 is removed through stopcock S2 at connection W out. A 1.5-by-10-in. glass tube AF2, stuffed with cotton, filters the air entering NS2 as the nutrient solution is removed.

3. Removal of Excess Cell Suspension

The removal of excess cell suspension in the growth tube is triggered by electrical contacts C1 in a side arm. One contact is of tungsten and fused through the glass wall, the other is a 0.5-in.-long No. 27 stainless steel hypodermic syringe needle which passes through a teflon insulator cap on the side arm. Use of a side arm for control was found necessary because, when the contacts were in the growth tube proper, premature electrical contact was made by aeration bubbles as they broke the surface.

In operation, as the growth volume becomes too large, contact at C1 drains off the electron-accumulated grid bias in relay R1, Fig. 4, so that the increase in plate current operates the high-sensitivity relay. This relay in turn actuates the coil of valve V1, which pulls a spring-loaded armature. (Valve V1 may be seen in Fig. 2 below the growth tube.) A pinch on a section of thin-walled rubber tubing is thus removed, and excess yeast-cell suspension drains out until electrical contact at C1 is interrupted.

Approximately 0.1 ml is removed per operation. In R1 it was found necessary to use a high-vacuum tube and relay instead of a gas control tube, owing to interference caused by the gas tube in the population-density measuring system, and, further, to use a 45-volt battery plate supply, rather than rectified and filtered ac, to avoid triggering of this circuit by line-switching transients.

4. Aeration and Agitation

Air, supplied by Pump 2, is filtered by passing through cotton stuffed into a 1-liter Erlenmyer flask AF1 and released into the growth tube once per minute for 5 seconds through valve V3. Intermittent aeration allows unobstructed time intervals for measurement of cell population density by the optical system, and minimizes accumulation of surface bubbles. Since the liquid volume in the growth tube is affected by aeration-bubble size, constant air pressure is required.

The air pressure is controlled by means of a salted water column with electrical contacts C2 and electronic relay R2, which in turn operates valve V2 to allow escape of excess air. Relay R2, Fig. 4 bottom, suggested by a circuit of Strong,[43] employs a gas tetrode with the coil of V2 in its plate circuit. The grid is normally biased past plate current cutoff by dc obtained by rectifying the tube's heater voltage. When contacts C2 close, as the air pressure forces the water column up, the grid bias to the gas tetrode virtually disappears. This causes the tube to conduct and to open bypass valve V2, which then relieves the excess pressure. The air pressure thus controlled oscillates ± 1/4 cm about 16 cm of water, with a period of about 1 second.

5. Population-Density Measurement

The previously described elements of the system were in operation before it was realized that for the type of operation desired--i.e., steady state established by nutrient flow rate, rather than a limiting nutrient--it was impossible to follow changes in division rate and keep the population density within bounds without almost continuous sampling and counting. Hence a more rapid population-density measuring system, incorporating continuous recording, was a real necessity. For making these measurements a conventional method[44] was chosen, i.e., measuring the amount of light scattered from the cell suspension. The system constructed to make these measurements, however, consisting of light source, photocell, amplifier, and recorder, is unique and will be described.

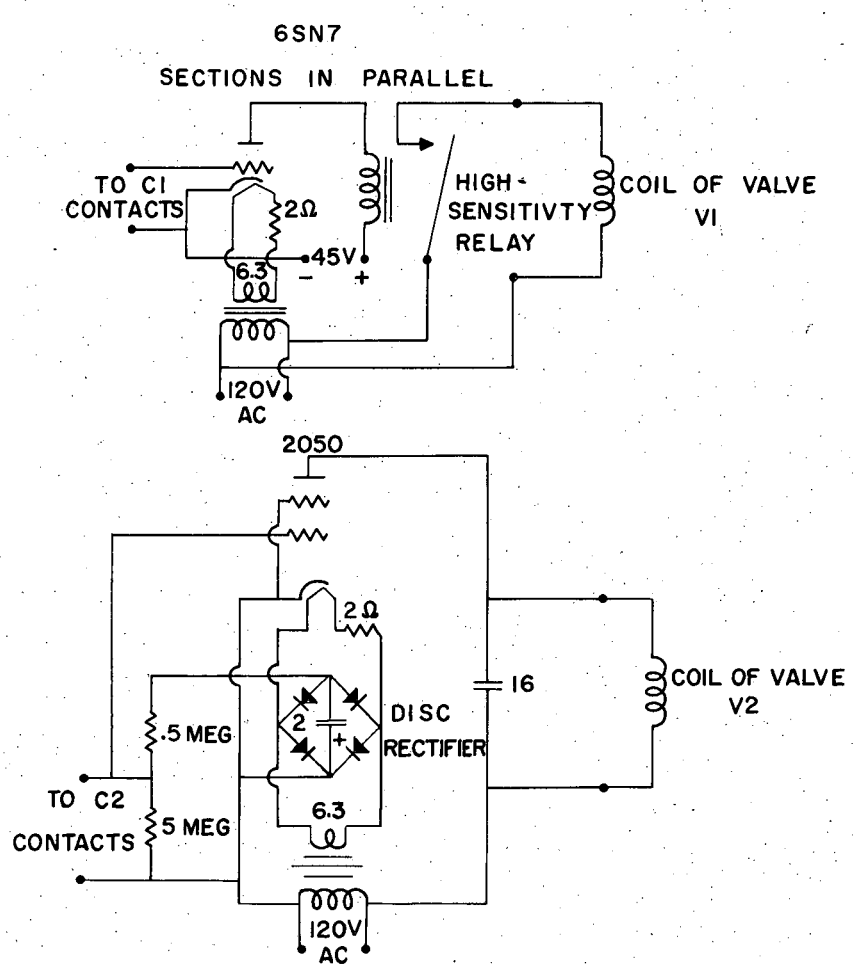

FIG.4 ELECTRONIC RELAY CIRCUITS. TOP R1, BOTTOM R2

MU-13322

Stabilized voltage for the light source L (adapted from a Spencer microscope illuminator) is supplied by a battery charger BC in parallel with two 6-volt 120-ampere-hour storage batteries B. The battery charger is supplied with regulated ac from the power supply Pwr2, and the autotransformer VA is so adjusted that ammeter A reads zero. In order to obtain an ac signal for subsequent amplification, the light beam is chopped at 330 cps by the rotating shutter RS.

Light scattered from the yeast-cell suspension within the growth tube is picked up by photocell P, which is located so that it receives light scattered up at approximately 45° and therefore receives only a negligibly small amount of light specularly reflected from the glass walls. Further, a cylindrical aluminum housing with 1/4-inch walls encloses P to shield it from extraneous room light and from the x-ray beam. As recommended by the manufacturer, for maximum stability of operation the phototube is operated at a low cathode current, usually less than 0.001 of the 5-μa rated average current.

The ac emf from the phototube is passed to a special amplifier Amp (also Fig. 5) designed for maximum stability and discrimination against undesired signals. Resistances and capacities for the second and third stages were selected to provide a low-frequency cutoff of approximately 160 cps for discrimination against hum;[45] for the first stage a much lower cutoff was used in order to reduce the amplification fall-off rate and attendant phase shift, which control stability when negative feedback is introduced.[46]

Negative feedback of 22 db is incorporated in the first two stages, leaving a net gain for these stages of 58.5 db. Running the feedback loop around all three stages was tried without success, apparently because the phase shift in the 807 output circuit was too great. The overall stability of the amplifier was found adequate, however, without additional feedback.

The Esterline-Angus 0–5-ampere ac recording ammeter, Rec1, has a resistance of about 1/2 ohm and an inductance of about 1 mh. Switchbox capacitance C2 (Fig. 5) set to 505μf cancels the inductive reactance, and the 230-to-2.5-volt filament transformer used as an output transformer reflects the 1/2-ohm resistance to the 807 plate at about 4300 ohms. This load resistance turned out to be satisfactory as measured by the amplifier's over-all linear response characteristic when the plate input was raised to 550 volts at 100 ma, a value somewhat higher than recommended by the manufacturer.

Plate power is supplied by two voltage-regulated power supplies connected in series. The circuits[46, 47] were modified to use 6AS7 regulator tubes for greater current capacity, and they used 6SJ7 and VR-75 tubes in the control circuits. It turned out that the output voltage of the first of these supplies decreased slightly as the load was increased from zero to 100 ma, while that of the second increased, so that it was possible to proportion the voltage delivered by each when connected in series so that no voltage change with loading could be observed. Regulated 110-volt ac for these plate power supplies and for the filament transformer for the amplifier tubes is supplied by Pwr 2.

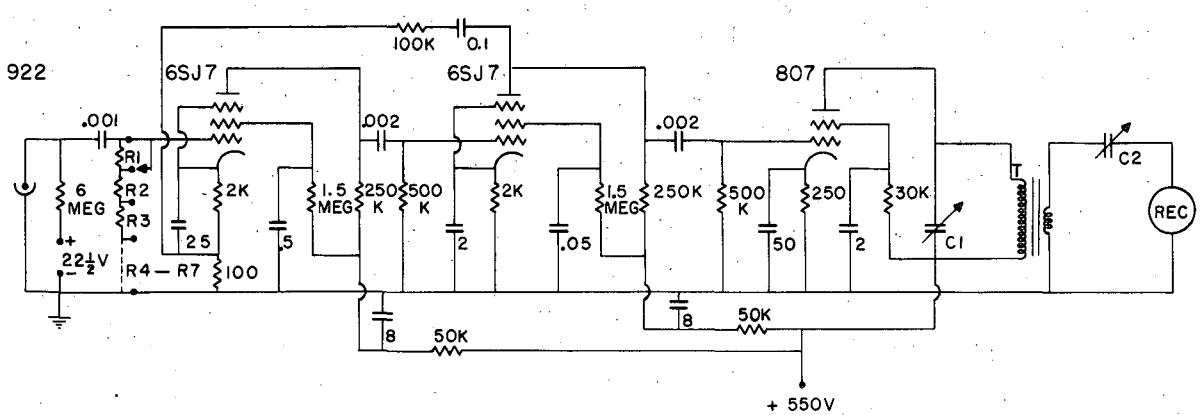

FIG. 5 SCHEMATIC OF LIGHT MEASURING SYSTEM FOR POPULATION DENSITY DETERMINATIONS

R1 800K 1% WIRE WOUND
R2 600K DO.
R3 400K DO.
R4 300K DO.
R5 300K HELIPOT
R6 200K DO.
R7 200K DO.

C1 CONDENSER BOX, 0.18 mfd USED
C2 DO. , 505 mfd USED
T OUTPUT TRANSFORMER, A 230 V TO 2.5V AT 40 amp. FILAMENT TRANSFORMER WAS USE
REC 1 RECORDING AMMETER, ESTERLINE-ANGUS MODEL AW, 0-5 amp. ac

MU-13323

For the filaments of the two voltage-amplifier tubes the potential is reduced by a series resistor to 4 volts, as suggested by Smith.[47] This results in a net hum reduction of approximately 10 db.

Residual extraneous signal, mostly 120 cps, appearing in the output at maximum gain gives a recorder reading of 0.3, and is equivalent to a 0.7-mv 330-cps signal introduced at the amplifier input.

6. pH Measurement

Prior to 17 September, 1956, a Beckman model G pH meter was used, and measurements were made on samples withdrawn from the growth tube periodically with a hypodermic syringe. This method was inadequate to delineate the nature of the changes taking place during the damped oscillation experiments, so that a continuous recording system using a model H-2 pH meter (pH in Fig. 1) and a 10-mv Leeds and Northrup Speedomax recorder (Rec 2) was installed. The two electrodes E were mounted in a plastic cup 3 inches in diameter by 3 inches deep, with a small porcelain spoon beneath the glass electrode which held sufficient solution to keep the hemisphere of the glass electrode completely covered. Effluent from the growth tube dropped on this electrode assembly before passing to the sump, a 2-liter flask.

7. X-Ray Irradiation, Automatic Timer, and Dose-Rate Monitor

X-ray irradiations were performed with a Universal diagnostic machine rated at 85 kv and 30 ma maximum for intermittent service. Since it was desired to operate continuously, though at considerably reduced plate currents, two changes were made. The first of these was to mount the head minus its front plate in an enclosing 3/32-inch iron box through which cooling air was blown. This box also provides additional shielding, since the only opening, other than the air holes, is a 2-inch diameter x-ray port which is covered with a 0.005-inch aluminum window.

The second change was in the electrical controls. In order to minimize the chance of electrical failure, it is very desirable to avoid surges in starting and stopping. Hence, to provide for changing the primary potentials slowly and, further, for better control at low currents, two variable autotransformers were substituted for the control panel provided with the x-ray head. The schematic is shown in Fig. 6. There too is shown the automatic control used in the experiments seeking cell-division synchrony by periodic irradiation. Autotransformer T1 controls the x-ray tube filament voltage, while T2 controls the plate. Both are supplied with 110-volt ac from the electronically regulated supply, Pwr 2 of Fig. 1. A continuous record of x-ray plate current is made by the recording milliammeter Rec 3.

The automatic control is designed to give periodic pulses of x-rays. Actuation of the switch on clock C initiates the action by shifting the contacts of the latching relay L. This turns on the 1.4-rpm motor M, which rotates the contact on the autotransformer T2 to maximum and throws the limit switch S. Switch S turns off the motor M, changes the connections for its reverse rotation, and initiates the interval timer T. At the end of the irradiation interval, T initiates

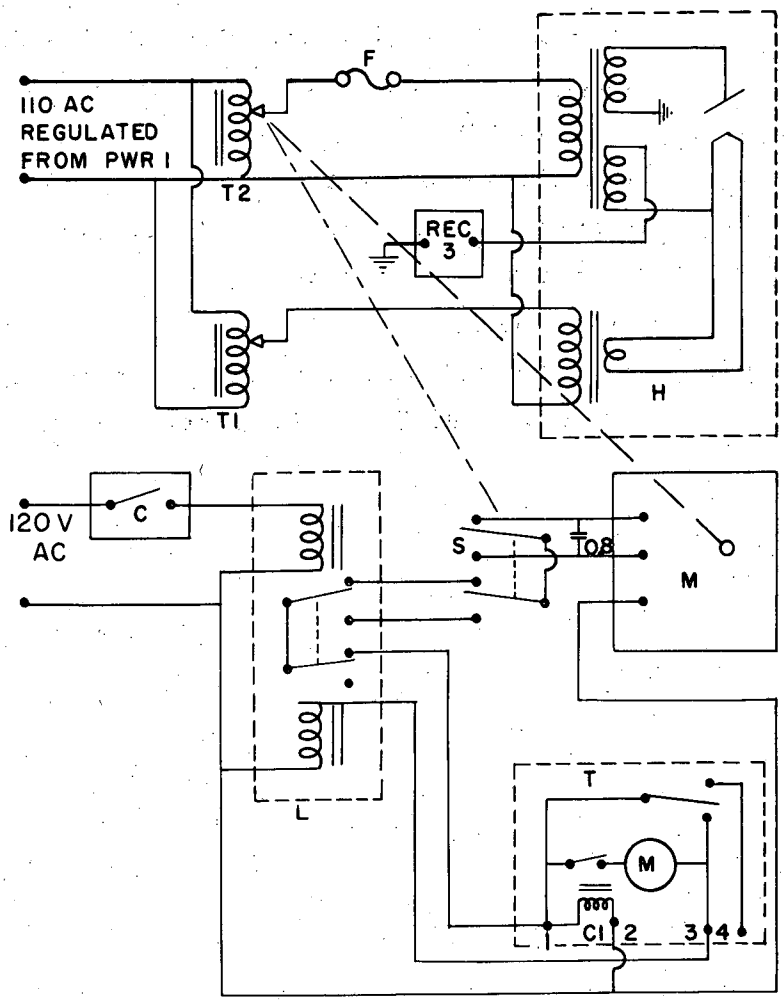

FIG. 6 X-RAY CONTROL CIRCUIT

MU-13324

Fig. 6 Key

C	clock-operated switch
F	5-amp fuse
H	portable x-ray head (Universal X-Ray Co. 85 kv, 30-ma, intermittent duty)
L	latching relay, DPDT (Advance LE/2C/115 VA)
M	1.4-rpm, 8-watt motor (Bodine KCL-22)
Rec 3	Recording milliammeter, 0–1 ma (Esterline-Angus model AW)
S	DPDT limiting switch
T	interval timer (Cramer TEC-60M)
	m synchronous motor
	cl magnetic clutch
T_1T_2	Variable autotransformer 7-amp maximum rating (Variac 200 C and Powerstat 116 U)

the action in reverse order, which terminates with the relay and switch reset for initiation by clock C at the start of the next irradiation period.

The x-ray dose rate was monitored by a beryllium-window ionization chamber[48] placed in the x-ray field. The ionization current passed through a 10,000-megohm resistor in series with the chamber and a 540-volt battery, and the potential drop across this resistor was measured with a UCRL electrometer connected to a Varian Associates graphic recorder.

B. Calibrations

1. Growth-Tube Volume

The growth tube's irregular shape--due to the attached arms for aeration, volume maintenance, and medium removal--complicates its volume determination. Estimation of the lower boundary of the active volume was obtained by observing the agitation of a water suspension of finely divided chalk particles as aeration bubbles rose in the tube. Agitation was not observed below the neck between the two points where the air-inlet arm and the volume-control arm join the tube body, and therefore the volume above this point is taken as the growth-tube volume. This volume was measured by difference weights, using water for filling, and was found to be 9.6 cm^3. The determination may be in error by 1% or perhaps 2% owing to uncertainty in estimating the lower boundary of the growth volume.

2. Population-Density Recording System

This system consists of photoelectric cell, ac amplifier, and ac recorder, which measure light scattered by the yeast-cell suspension. Constant-intensity pulses of light are provided for this system by a constant-intensity light source and a rotating shutter. Calibration was done in stages, i.e., first, amplifier and recorder; then photocell, amplifier and recorder; and finally yeast-cell density, photocell, amplifier, and recorder.

For the first stage, light input to the photocell was fixed by reflecting light from a small piece of tape affixed to the growth tube. The photocell thus fed a constant input to the amplifier. This signal was then varied with the input gain control, which is composed of 1% wire-wound resistors, and the corresponding output readings of the recorder noted. The dots of Fig. 7 (data of 1 Oct 56) show that this portion of the system is indeed linear. Before 1 Oct 56 the amplifier was operating with 400 volts plate supply and exhibited a substantial amount of curvature between 8 and 10 on the recorder scale. It was thought that this would not be a serious limitation, since over-all calibration of yeast-cell density vs recorder reading was subsequently made. Reduction of data from continuous runs, however, proved to be an arduous task, which apparently could be lessened appreciably by linear measuring equipment. So on 1 October another voltage-regulated power supply was built and connected in series with the existing one to raise the plate voltage to 550 volts. This change was sufficient

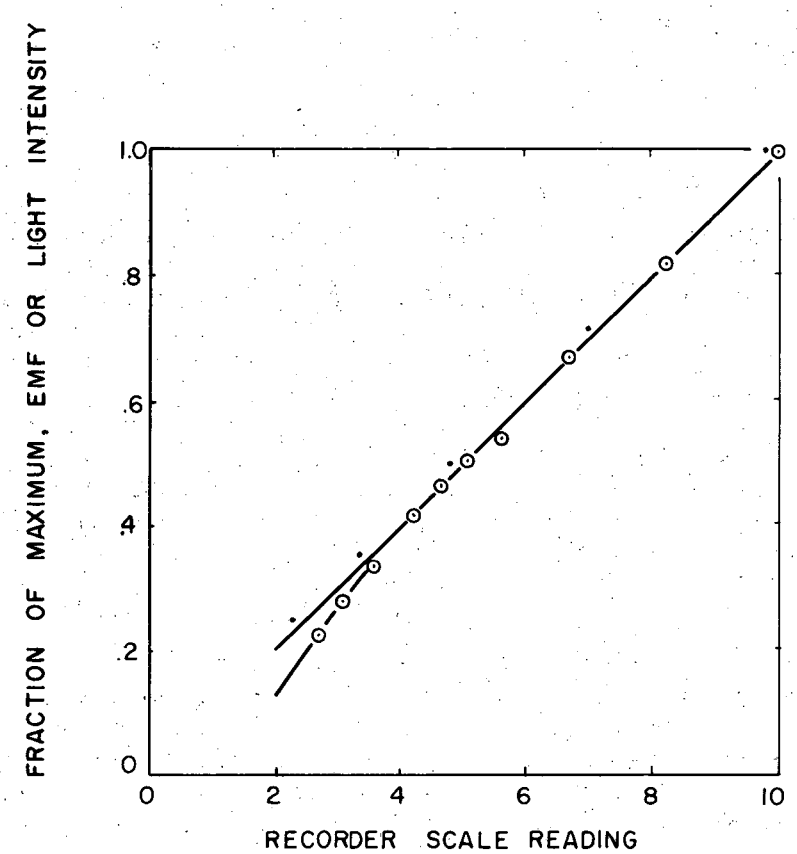

FIG. 7 CALIBRATION OF POPULATION DENSITY MEASURING SYSTEM

—·— EMF INPUT TO AMPLIFIER VARIED

—⊙— LIGHT INPUT TO PHOTOELECTRIC CELL VARIED

MU-13325

to straighten out the amplifier response curve at its upper end.

For the second stage of calibration, i.e., photocell-amplifier-recorder, neutral-density Wratten filters were interposed in the light beam between the rotating light chopper and the growth tube, and corresponding recorder readings were noted. The data of these measurements are encircled points of Fig. 7. Curvature at the lower end is due to hum pickup, which was later decreased by a factor of four. An available kit of neutral-density filters covering the density range 0.1 to 1.0 first used for this calibration turned out to be anything but neutral, at least for the spectrum of tungsten lamp and type-922 photocell, and gave very strange-looking calibration curves. The 0.1 filter was quartered and the pieces were superimposed, and then the first four points below (10, 1.0) in Fig. 7 were obtained (it was assumed that one, two, and three filters superimposed have optical densities respectively of 1/4, 1/2, and 3/4 of the four superimposed). The recorder reading with the four filters superimposed together with the no-filter point (10, 1.0) establish the slope of the line against which linearity is being checked. On this basis the 0.4 neutral-density filter measures at 0.298, and when used with the four 0.1 pieces gave the four points at the lower end (Fig. 7).

The over-all calibration of the system for population density vs recorder reading was not required where only growth rates were being measured. However, it was made as a part of each experiment when needed. Numbers per cm^3 were obtained by introducing a sample of the growth suspension into a standard blood cell counting chamber (Neubauer, Spencer "Bright-Line") and counting under 250-times magnification. These samples were taken with a No. 20 5-inch needle and a 1/4-ml hypodermic syringe through a puncture stopper on a side arm of the growth tube. The volume of the needle alone is 2.5 times that required to fill both sides of the counting plate, so that there is no volume error due to dilution by residual rinse water in the syringe. Sterilization of the needle was done by inserting it into a 6-inch length of 3/32-inch/o.d. stainless tubing heated to red heat between the terminals of a 5-volt 30-amp transformer. Counts of cells and buds (less than 1/2 size of mother cell) were made for each sample, between 300 and 500 cells on each side of the haemocytometer being counted. The cell count was used for the population density measure. Figure 8, calibration for the oscillation experiment started 9 Oct 56, is typical. The curve's two branches, which result from two different average cell sizes, are discussed later (Section IV C).

3. X-Ray Dose Rate

Owing to the geometric situation of the cylindrical growth tube in what was essentially a point-source radiation field, the dose received by the culture on irradiation varied from point to point throughout the culture. Determination of the average value was done in three steps. These were:

(a) locating apparent point from which the x-rays diverge;
(b) determining an average dose throughout a median

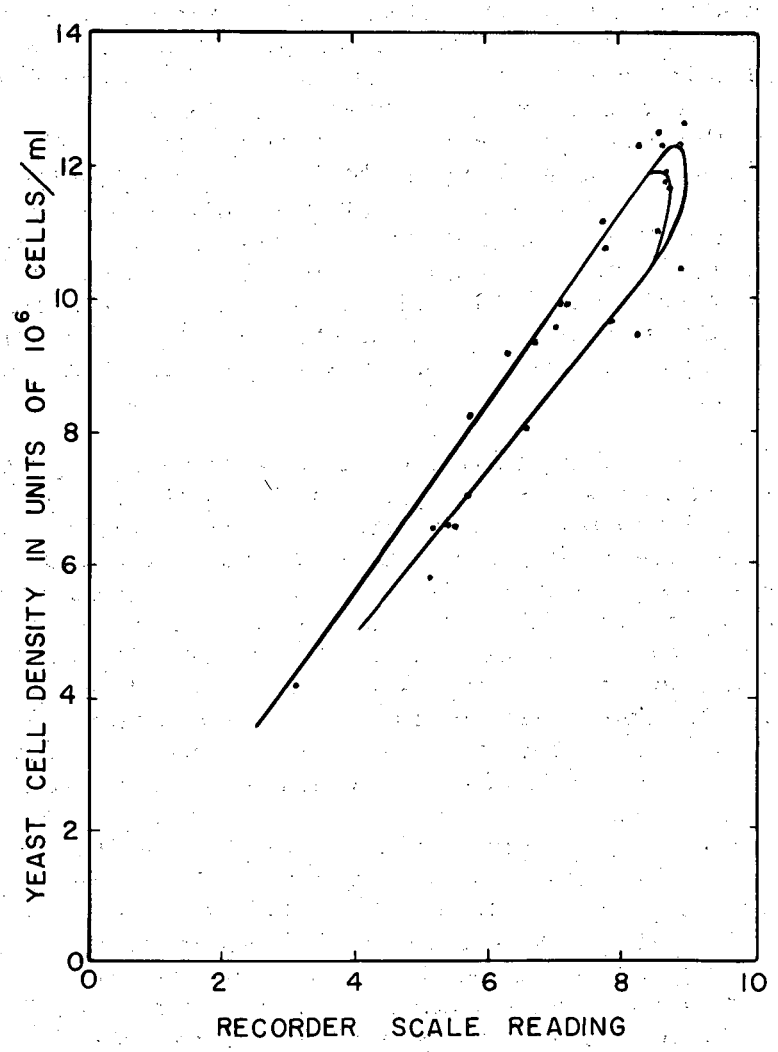

FIG. 8 CALIBRATION OF POPULATION DENSITY RECORDING SYSTEM. OCT. 9 1956

MU-13329

section over small isodose volumes, including corrections for absorption and inverse square divergence; and

(c) obtaining a volume-weighted average dose from measurements at positions along the length of the growth tube.

For all these measurements a 100-r Victoreen ion chamber was used with the sensitive volume immersed in nutrient solution in a tube of the same thickness and diameter as the growth tube. The ion chamber was interchecked with another 100-r chamber and a Victoreen Radocon meter using 85-kv x-rays from a 250-kv-maximum Phillips machine. All measurements agreed within 2.5% of their average at 20, 50, and 90 r.

Dose measurements to establish the effective point of x-ray source were taken at five positions, from 8 to 28 cm from the shield box surrounding the x-ray tube. These measurements were plotted on log-log paper for each of several values of the unknown distance from source to shield. A straight line of inverse-square slope was then slid over the field of points until a best fit was obtained, and this gave a value of 15 cm for source-to-growth-tube distance.

A graphical method was also used for the next step. The x-ray source and growth-tube cross section were laid out double size, and a series of arcs (isodose curves) centering on the source and spaced 1 mm apart were struck through the growth tube. These arcs and the tube walls are two sides of volume elements 1 cm long (the length of the sensitive volume in the Victoreen ion chamber) in which the dose may be assumed constant. Now, at 15 cm from a point source the arc of a 1-cm chord is larger than the chord by only 0.02%, so that the arcs may be considered as straight lines. The energy ΔE dissipated within one of these volume elements Δv is given by

$$\Delta E = \Delta v \, E_{15} \left[15/(x + 15)\right]^2 \exp(-\mu x),$$

where E_{15} is x-ray energy density at the growth-tube axis 15 cm from the source, x is distance (in cm) of a volume element from the growth-tube axis, and $\mu = 0.3 \text{ cm}^{-1}$ is the absorption coefficient for 85-kv x-rays in water. Summing over the total volume of the 1-cm growth-tube section and dividing by the volume and energy density on the axis gives the factor by which the average energy density differs from that measured at the center:

$$\frac{\Sigma \Delta E}{E_{15} \Sigma \Delta v} = \frac{\Sigma \left\{ \Delta v \left[\frac{15}{x + 15}\right]^2 \exp(-\mu x) \right\}}{\Sigma \Delta v} .$$

These operations were performed numerically, and led to the conclusion that the dose measured at the center of the tube exceeds the average for this 1-cm central section by 0.5%.

For 1-cm sections above and below the center the x-ray intensity decreases both for distance and angular incidence, the maximums amounting respectively to 3.8% and 1.9% at the extremes of the growth tube. This depends, however, on an inverse-square radiation field, which may not be realized over so large a field, so that it was considered necessary to measure. The Victoreen ion chamber in nutrient medium, as before, was positioned successively at 1-cm intervals along the growth-tube axis. The volume-weighted average of the dose measurements at seven points (the shape of the growth tube changes from cylindrical to conical near the bottom) turned out to be less than that measured at the center by 7.5%, not far from that expected from geometric considerations. A summary of the dose-rate calibrations is: With 1.0 ma of x-ray plate current the dose rate is 1980 r per hour to the yeast suspension within the growth tube.

4. pH Meter

Four buffers in the pH range 4.2 to 5.2 were made up and standardized with the Beckman model G meter, and these plus the Beckman standard pH buffers 4.0 and 7.0 constituted the series against which instrument linearity was checked. No significant deviation was found. Checks at pH 4.0 made every few days were generally within 0.02 pH unit of 4.0. Continuous operation on a voltage-regulated line in a temperature-controlled room probably contributed much toward good stability.

C. Temperature Control

The laboratory temperature was maintained at 29 ± .25°C by a throttling type of controller (Minneapolis-Honeywell type L097A) connected to a piston-type airmotor, which in turn operated a variable autotransformer. This supplied a variable ac potential which was proportional to the temperature difference between the room and the controller setting; the maximum potential was reached with a temperature difference of about 1/2°C. The variable potential supplied a 20-ohm heater coil set in the air stream of a 12-inch oscillating fan.

Further temperature regulation at the growth tube was provided by a mercury-bulb regulator (Precision Scientific microset differential-range thermoregulator) which, through an electronic relay similar to R1 of Fig. 4, operated a 100-watt heater in the air stream of a small blower. The air stream impinged upon both regulator and growth tube. As measured by a mercury-bulb thermometer the temperature fluctuated ± 0.1°C about 29.7°C. The actual temperature variation within the growth tube was less, however, owing to the heat capacity of the liquid culture.

D. Nutrient Preparation

Liquid nutrient consisting of 0.10% yeast extract (Difco, control No. 416490) and 1.0% dextrose was prepared in 2-liter batches and autoclaved for 20 minutes at 20 lbs/in^2 pressure. With the autoclave that was used, the temperature of the nutrient solution was above 100°C for 11 minutes and rose to 118°C by the end of the sterilizing period. This was determined by extrapolation above 100° of the temperature-vs-time curve obtained from the autoclaving of several water samples. For the extrapolation it was assumed that the rate of heating was proportional to the temperature difference.

E. Procedure for Obtaining Growth Rates

The yeast-cell population density is a linear function of its recorder reading, so that when recorder reading was plotted vs time on semilog paper, a straight line resulted as long as division was in the log phase, whether at steady state or not. In the latter case, the slope of the curve was read in terms of the time required for a twofold population change, and the division rate calculated by means of Eq. (7), Chapter II. At steady state the division rate followed directly from the washout rate, Eq. (4). When the absolute population densities for a run were desired, a calibration had to be made, for, although throughout any one run the population-recording system sensitivity remained constant, variations in repositioning the equipment after autoclaving at the beginning of each run changed the absolute sensitivity. This calibration was easily applied to the plotted recorder readings by shifting the log scale appropriately.

F. Procedure for Determining Radiation Resistance for Acute Exposure

One of the questions asked of the long-term chronic-irradiation experiments concerns the possible alteration of the population's response to single-dose x-ray irradiation exposures. Several measurements were made, therefore, of the viability to 25 kr of 50-kv x-rays of cells taken from the growth tube. The samples were taken as before (see Section III C 2), except that the hypodermic needles for sampling were sterilized in the autoclave, rather than in the electrically heated tube, in order to avoid possible thermal inactivation of the cells as they were withdrawn from the growth tube. Some thermal inactivation is known to occur at only a few degrees above the optimum growth temperature of 30°C. A 0.15-ml sample was placed in the cup of an air brush and a sufficient volume sprayed onto an agar block approximately 1 cm square by 2 mm thick to give 300 to 600 cell pairs. The agar block was prepared in the center of a 22-mm-square plastic microscope slide cover by flowing melted yeast-extract-dextrose agar over the whole surface, then trimming off the excess when cool. After the sample was sprayed on the agar and exposed to a 25-kr x-ray dose, the cover slip was sealed with stopcock lubricant, agar side down, onto a Van Tieghem cell. After 1 day of incubation at room temperature,

microcolony counts of controls and irradiates were made, following the procedure of Zirkle and Tobias[42] except that the criterion for viability was growth to more than 40 cells per colony.[49]

IV. RESULTS AND DISCUSSION

First the yeast cells were studied under normal--i.e., nonirradiated--conditions of continuous culture. The results of this study are presented in Sections A, B, and C which follow. Following in Section D are the results of continuous exposure to x-rays, and finally in Section E the results of intermittent exposures synchronized with average division time.

A. Demonstration That Division Rates Are Independent of Population Density

The equation expressing population density as a function of time, Eq. (3), Section II, depends for its validity on the assumption that α, the cell-division rate, is constant and independent of the population density over a certain range when the nutrient flow is adjusted near the steady-state value. How well the actual operation obeys this equation is shown by the curves in Fig. 9. Curve A shows a constant division rate for a period of 17 hours. During the first 10.25 hours the nutrient flow rate of 4.58 ml/hr allowed a population increase by a factor of 1.3 at an observed doubling time $t^{o}_{1/2}$ = 24 hours, which by Eq. (7) gives a division rate $\alpha = 0.506\ hr^{-1}$. Then the flow rate was readjusted to 4.18 ml/hr, and for the remaining 6.75 hours the same steady state was maintained (for all practical purposes) at a division rate $\alpha = 0.504\ hr^{-1}$. Curve B shows a steady-state condition for 8.5 hours during which the nutrient flow was interrupted three times for periods of 5, 5, and 8 minutes. Each time the flow was resumed, the population steadied at the new higher population density with the same division rate, $\alpha = 0.486\ hr^{-1}$. Curve C shows that the division rate is constant over a range of population density while being continually x-ray-irradiated at a rate of 3725 r/generation. In this case the curve was also linear at the calculated division rate of $0.230\ hr^{-1}$. These data, together with other data covering smaller population-density ranges at higher and lower populations, indicate that, between about 2×10^6 (the lowest density measurable) and 10^7 cells per ml (where the environment begins to limit growth), the division rate is independent of the population density. All steady-state growth-rate measurements were made within this population-density range.

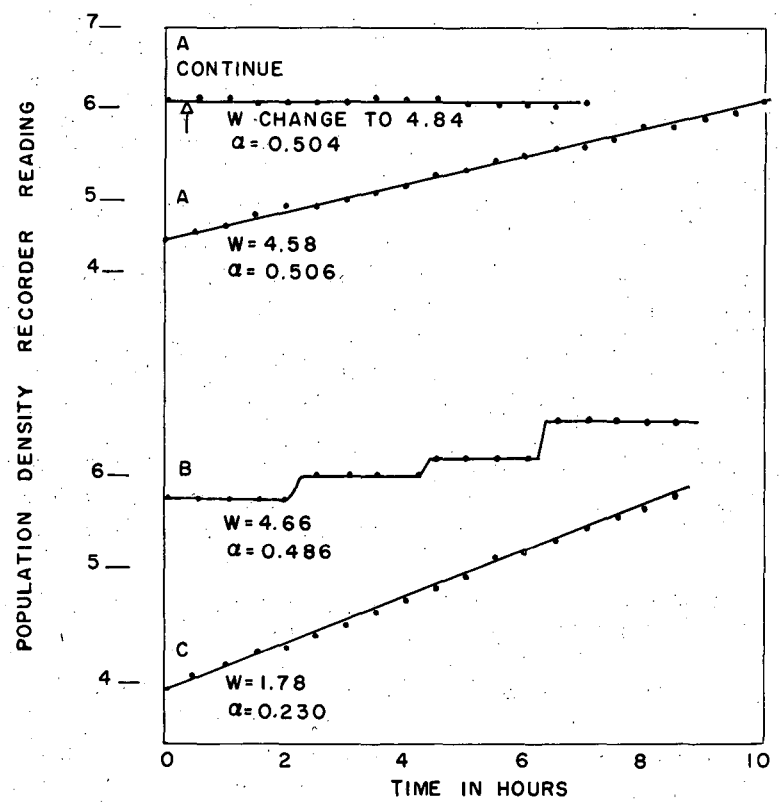

FIG. 9 POPULATION DENSITY VS. TIME. INDEPENDENCE OF DIVISION RATE α IN HR^{-1} AND POPULATION DENSITY IS SHOWN BY THESE CURVES. W IS NUTRIENT FLOW RATE IN ml/hr. TO GET DENSITY IN UNITS OF 10^6/ml, MULTIPLY A AND B BY 1.3 AND C BY 0.6

MU-13333

B. Demonstration of Sensitivity of Growing Cultures to Environmental Change

The independence of division rate of changing population density shown in the previous section holds only when the change in population density is not too rapid. For cultures grown with continuous nutrient flow, so that the population density doubles in 12 hours or less, the actual division rate is less than that which was obtained immediately thereafter when the flow rate was reset nearer to the steady-state value. Insufficient data are available to quantitate this; however, the first part of Fig. 10 illustrates the point. Fifteen hours after inoculation a constant division rate $\alpha = 0.378\ hr^{-1}$ was obtained with an observed generation (doubling) time $t^{o}_{1/2} = 4.6$ hr. Then the flow rate was increased and the cells grew at a new higher rate, $0.499\ hr^{-1}$.

These data suggest that in cultures with rapidly changing population densities the division rate is a function of the rate of change of chemical environment, and indicate that division rates taken in batch cultures are not likely to agree with those made in steady-state culture, since the former contain an as-yet-unexplored variable dependence on chemical environment. It seems likely that the lowering of division rate indicates a general growth depression rather than an induction into lag phase of a fraction of the cells, since it is generally accepted that log phase cells are virtually 100% viable. The effect may be due to metabolic activity of the cells themselves, which modifies the medium. A change in washout rate is expected to change the concentration of metabolic products in the medium.

Further dramatic effect of changing environment is furnished by the remaining data in Fig. 10. At about 1:30 a.m. on 17 February one of the syringe plungers of the nutrient supply pump jammed near the end of its delivery stroke and broke off. This left a situation in which on alternate periods of 1.80 hr there was no nutrient flow. The resulting observed population-doubling times and division rates appear beneath the curve, A, B, C, D, E. These show how, after the yeast had divided at lesser rates B and D in nonrenewing nutrient culture for short periods, its ability to utilize a constantly renewing medium was markedly lessened on the successive times of presentation, C and E. Further, with unrenewed culture, D rate is less than B rate. It seems that a reduced state of growth analogous to a partial lag has been induced, although it is not clear why this should appear abruptly with the nutrient flow change. If no further disturbance occurs, recovery to normal growth rate is fairly rapid, as the tail end of Fig. 10 shows.

FIG. 10 EFFECT OF A SUDDEN CHANGE IN NUTRIENT FLOW ON DIVISION RATE OF *S. CEREVISIAE*

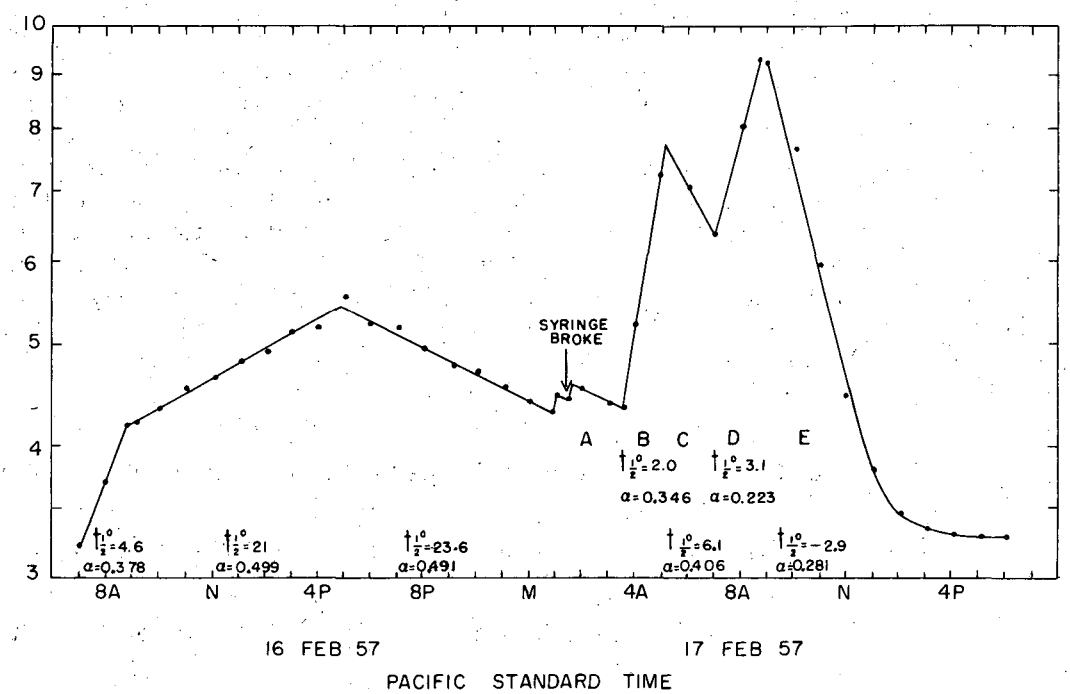

MU-13330

C. Effect on Growth of a Limited Nutrient

The range of population densities and nutrient flows when α, the division rate, is independent of both of the above factors is limited. It is easy, however, to adjust these to conditions where α is not constant. When the transition occurs from constant α to flow-rate-limited α, then it is possible to have a damped oscillation of population density vs time before a population steady state is reached. In view of the apparent rapidity with which Novick and Szilard[38] and others have obtained steady states with nutrient-limited growth, this phenomenon with yeast was unexpected and of sufficient interest to warrant the attention of a special experiment.

With 1.0% dextrose in the nutrient the maximum population densities were about 10^8 per cm^3, and difficulty arose because of growth on the walls of the culture tube. When the dextrose concentration was reduced to 0.20%, the maximum population that the nutrient would support was about 34×10^6 per cm^3, as shown by the growth curve of Fig. 11, and no growth accumulated on the culture-tube walls. Therefore, with a 0.10% yeast extract and 0.20% dextrose nutrient, set to flow at a rate experience had shown would be about one-half that required for steady state, the population density fluctuated with time as is shown in the upper curve of Fig. 12. Below in Fig. 12 appears the curve for pH taken simultaneously and the curve of the division rate derived from the population-density curve. The major features of these oscillations are:

(a). the cell density changes by a factor of eight;

(b). the period is 16 hours longer than the normal cell-division time of 1.4 hours;

(c). there is an eventual transition to a medium-limited steady state;

(d). an oscillation of pH occurs, with the same period but different phase; and

(e). the division-rate oscillation lags the pH oscillation by only a small amount.

A more detailed analysis is contained in the following seven points:

1. The population-density maximum, as measured by direct cell count, occurs about one hour before the maximum in light scattering, and indicates an increase in the average cell size. This is the reason for the curved section connecting the two branches of the calibration curve of Fig. 8, where the upper branch applies to the culture in logarithmic growth and the lower applies to the condition of population decrease with time. The slopes of the two branches are in the ratio 8:7, and indicate a 14% change in the boundary areas, at the cell periphery and within the cell, which are causes of reflection and scattering.

2. Over the period from approximately 2 hours before the population density maximum to approximately 4 hours after, the division rate continuously decreases from its maximum rate through one-half

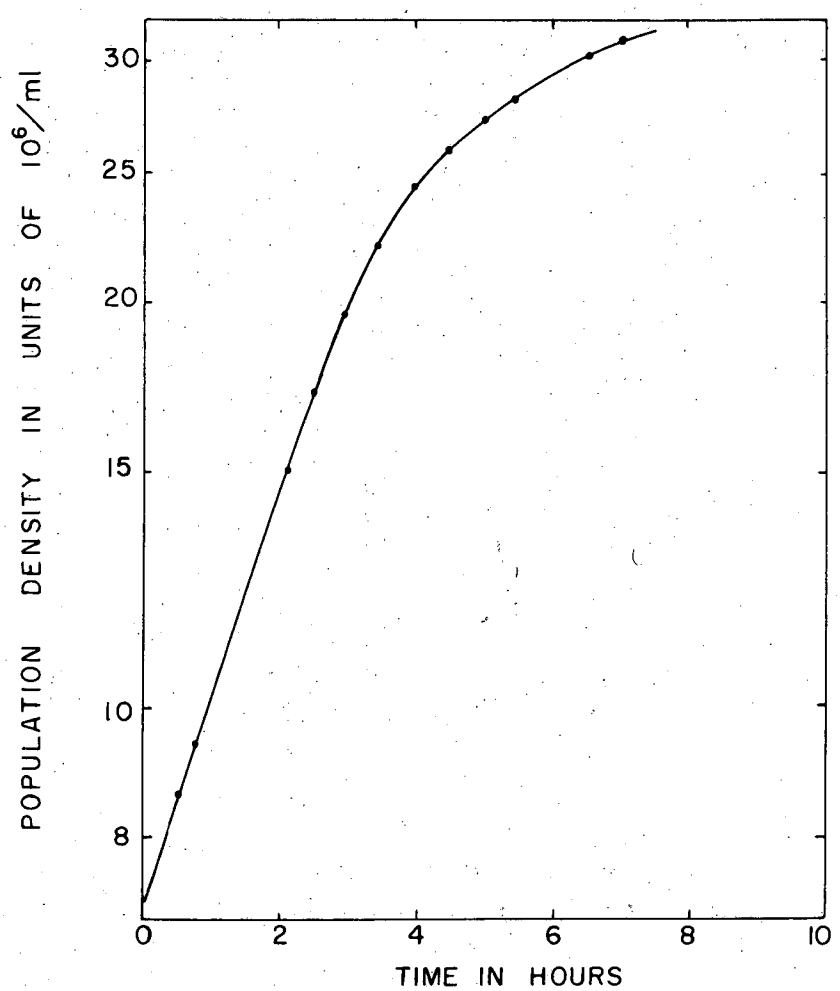

FIG. 11 GROWTH CURVE OF DIPLOID *S. CEREVISIAE* IN BATCH CULTURE

MU-13331

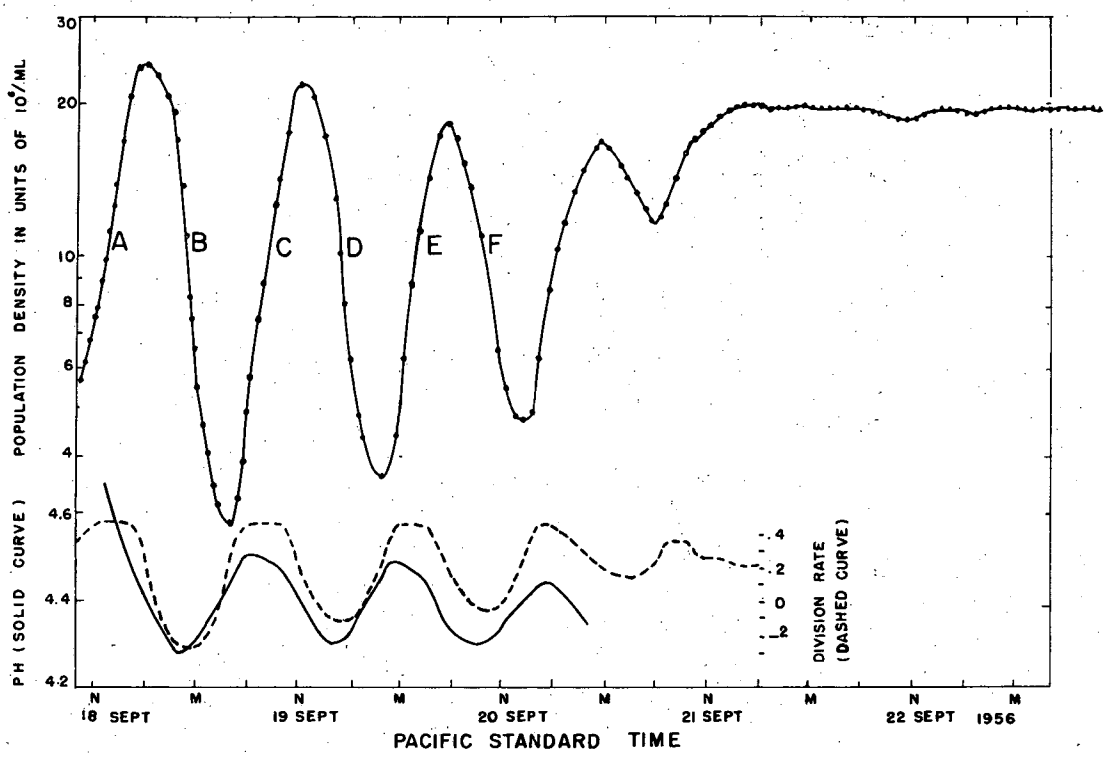

FIG. 12 NUTRIENT LIMITED GROWTH PATTERN OF DIPLOID *S. CEREVISIAE*

MU-13334

maximum at the population density maximum to zero three hours later, at which point the slope of the curve is equal to the washout rate.

3. During the same period the pH is continually decreasing toward its minimum, which occurs at the same time as the division rate reaches its minimum.

4. Immediately following division cessation, the population density goes into a rapid decline, the speed of which cannot be accounted for on the basis of washout alone. For example, in branch B, Fig. 12 and in Table I the disappearance rate of cells from the suspension is 0.49 hr^{-1}, of which only 0.22 hr^{-1} is due to washout.

Table I

Growth-rate data for the first six branches of Fig. 12. Washout rate $\beta = 0.22\ hr^{-1}$

Branch	$t^{o}_{1/2}$ (hr)	$\alpha-\beta$ (hr^{-1})	α (hr^{-1})
A	2.75	0.252	0.472
B	-1.41	-0.491	-0.271
C	2.7	0.256	0.476
D	-2.1	-0.330	-0.11
E	2.7	0.256	0.476
F	-2.7	-0.256	-0.04

To account for the remaining 0.27-hr^{-1} disappearance rate one must postulate a cell lysis of a rather special sort. It depends on continuous addition of fresh nutrient.

Pertinent facts regarding the lysis can be summarized:

(a) cells cultured batchwise will not lyse in insufficient medium or at the pH values observed;

(b) the medium can support growth at a reduced rate at a higher population level than was observed during the oscillation, as Fig. 11 shows;

(c) in separate experiments, conducted later than these, Tobias[61]

showed that dextrose utilization depends on pH, so that both hydrogen ion and dextrose probably limited the division on the continuous culture; and

(d) when cell division ceased the continued addition of fresh medium led to lysis of a large fraction of the cell population.

A simple model accounting for the lysis may be built on the postulates that the cells, although halted in division by the nutrient environment, still manufacture from the added fresh nutrient a lysogenic factor to which they are sensitive while in the nondividing condition. A few cells (a small fraction) are resistant, however, and when conditions suitable for growth are re-established, they reactivate their division mechanisms.

5. The cells of the surviving fraction go on to grow again and attain the same maximum division rate as obtained during the initial growth phase. (Compare branches A, C, E, and first part of G.) The ability to survive through the lysis, however, increases with each cycle in a manner that suggests either selection for a hardier strain or adaptation to the conditions of a limited-nutrient environment, or both.

6. The amplitude of the oscillations is determined by

(a) the ability of the surviving cells to resist lysis during the lysing periods;

(b) the concentrations of the growth-limiting components at each time division ceases;

(c) the concentrations of the growth-limiting components finally attained at the beginning of each new division period owing to replenishment by the continuous nutrient flow during the previous lysing period.

These are interrelated. As indicated in Item 5 above, (a) increases with each cycle. This leaves a larger population at the beginning of each new division period, so that the following nutrient utilization goes on at a higher rate. As a result, the nutrients reach the limit (b) before the supply can build them as high as reached on the previous cycle. Then the continuous nutrient flow builds up (c), but to a lower value on each cycle, since it starts in each case from lower values of (b).

7. After the oscillations damped out, the culture maintained an environment-controlled steady state for 35 generations.

Oscillations of cell-population density of yeast in continuous propagation have been observed previously by Finn and Wilson.[50] Their oscillations differ, however, in several important aspects from those observed here: they are damped; they have a period of the same order as the generation time; and they have amplitudes of only about 10% of the average population density. Finn and Wilson ascribe the oscillations entirely to pH changes, which they found to be approximately twice those observed here, and show that to account for them it is necessary only

to postulate a delay mechanism in the feedback of pH information in the growth system.

D. Chronic Irradiation Effects

When continuous x-rays are turned on a steady-state population of cells then it becomes a nonsteady state. The population level always decreases, and the population would eventually wash out if the nutrient-flow rate were not reduced to match the decrease in division rate. The steady states established by this adjustment were at various population levels, but all satisfied the population-density conditions set forth in Section IV A. At steady state the culture was observed with regard to several expected changes. These were:

1. state of aggregation,
2. average cell size,
3. average division time,
4. recovery after removal of x-rays,
5. acquired resistance to acute exposure, and
6. cytochrome deficiency.

A discussion of each follows.

1. State of Aggregation

Under the active growth conditions of these experiments, approximately 95% of the cells aggregate in pairs, with the remaining 5% mostly fours. Groups of three or more than four were rare.

When exposed to 6150 r/generation, the maximum used, approximately 90% of the cells appeared as doubles, with the remaining 10% about equally divided between ones and fours. As without irradiation, threes and more than fours were rare. The increased proportion of singles was probably a part of the nondividing contingent of cells that had received an inhibitory dose. (See Section D3, following.)

A partial explanation of this grouping comes from some observations by Burns,[51] who found that mother-daughter cohesion was very strong prior to the inception of budding and dropped markedly thereafter. Further, the acts of budding were very nearly synchronized for the pair. Thus fours break into twos shortly after budding starts and remain as a pair while the daughter matures.

Clump-causing stickiness between cells, which might have been expected as an effect of chronic irradiation exposure, did not materialize.

2. Average Cell Size

A number of workers--e.g., Ref. 20, 21, 22--have observed an increase in cell size of yeasts exposed to x-rays for relatively short periods, so that the increase in average cell size found here with continuous radiation was expected. Qualitatively the most notable change concerned the size spectrum. Whereas without irradiation the cells

were rather uniform in size, with irradiation the average cell size gradually increased until at steady state a continuous spectrum of sizes was apparent up to approximately twice that of the unirradiated cell. Photomicrographs of several cells without and with exposure to irradiation are shown in Fig. 13. These were taken with critical illumination and with phase-contrast optics, including a 97X oil-immersion objective and a 12.5X eyepiece. Several of the pictures were taken of samples on a Pietroff-Hauser counting plate, so that by actual measurement the magnification is 1130X. The field shown in each picture is 40 by 40 microns. Under exposure to irradiation the characteristic cell-size enlargement up to two times normal diameter is apparent; compare Nos. 4 to 9 with Nos. 1 to 3. Also note the marked increase in visible structure within the irradiated cells. The budding of the giant double, No. 9, is interesting in that it demonstrates that at least some characteristics of viability are still present.

Quantitative average-cell-size data can be obtained from population density vs recorder-reading calibrations similar to Fig. 8, and by the same considerations as of Section IV C. The data available indicate a 40% increase in average area of the cell and of its light-scattering internal structures under a continuous exposure to 6150 r/generation time. Insufficient data are available, however, to show what the functional dependence may be.

3. Average Division Rate

The most extensive results of this work concern the effect of continuous exposure to x-rays on the average division rate of the yeast.

a. Qualitative Description of Change

Between steady states without and with exposure to x-ray irradiation (or on increasing the radiation dose rate) is a transition interval during which the average cell size changes, as mentioned in the previous section, and the division rate gradually decreases. The interval required for these changes to take effect varies with the magnitude of the change made, but appears to be of the order of several generation times.

b. Presentation of Data

The measured decrease in the division rate is the result of both inhibition and delay in division. These two effects may be separated, and the division rate of the cells which were only delayed and therefore are still viable may be obtained by Eq. (14) in Section II. Viability data for this calculation were obtained as described in Section IIIF, and are tabulated in Table II.

The range of viability change is small enough so that there is little choice between linear and logarithmic fit; both lines fall within the standard deviations. The logarithmic fit, however, falls slightly nearer the experimental points, and was therefore used to evaluate $n/(n + m)$ for use in Eq. (14) to calculate the actual division rate of the viable cells. The results giving the average division rate of the viable cells are tabulated in column six of Table III. There, too, appear the

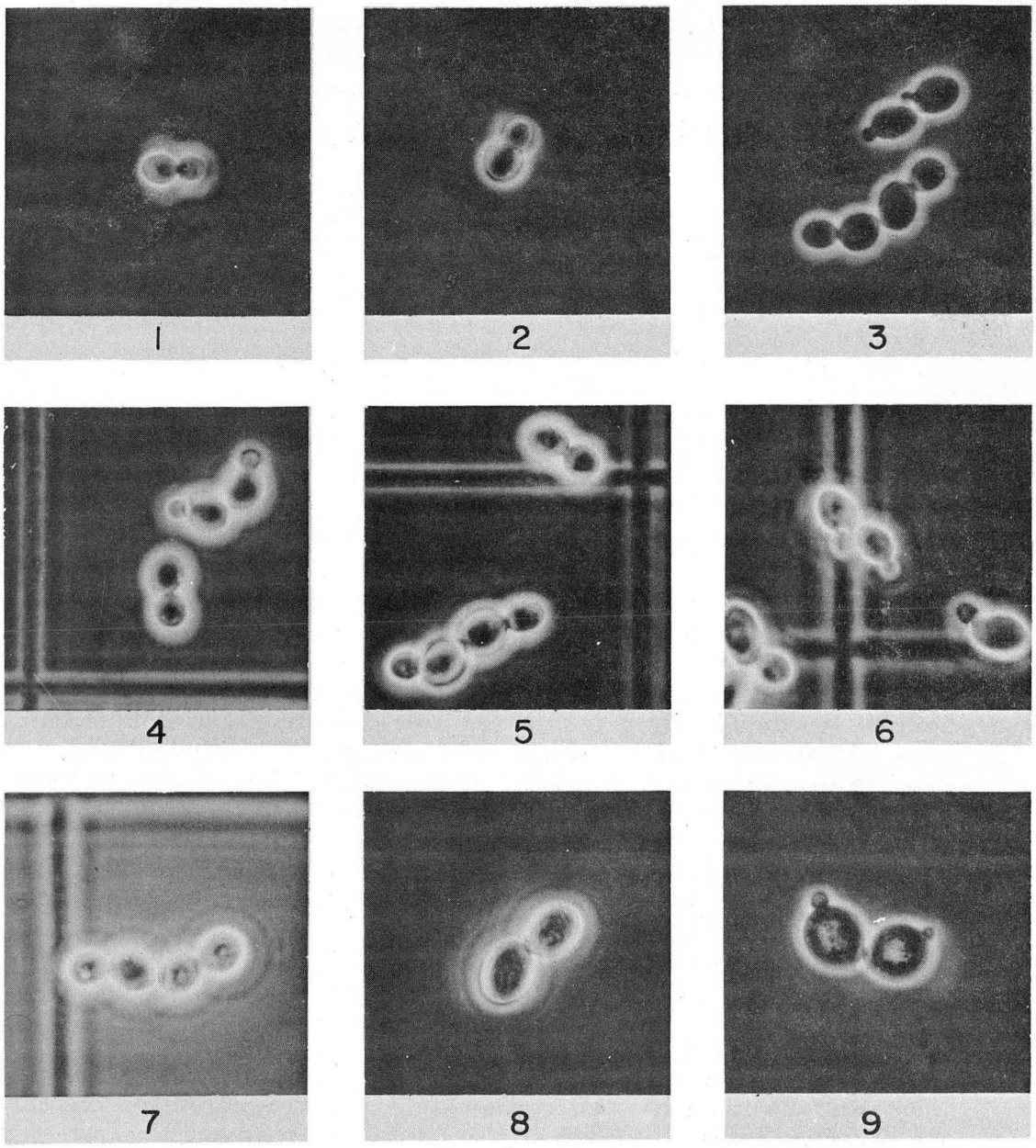

ZN-1743

Fig. 13. Phase contrast photomicrographs of diploid S. cerevisiae. Each field is 40μ x 40μ. 1 to 3 are unirradiated cells; 4 to 9 are cells exposed to continuous x-ray irradiation of various dose rates. No correlation exists between size and rate. Note visible granular structure as well as increased size of chronically irradiated cells.

Table II

Viability of steady-state yeast culture exposed to chronic irradiation			
Dose rate (r/generation)	No. of samples	Percent viable, n/(n+m) [Eq. (14)]	σ
0	3	98.5	1.06
782	1	96.0	----
2515	5	93.3	1.69
6150	2	87.0	2.0

original data, in columns three and four. The data of average division rate for viable cells are plotted vs dose rate in Fig. 14.

Linear change of division rate with dose rate of 10^{-4} $hr^{-1}r^{-1}$ generation describes the data very well out to about 2500 r/generation time, after which the division rate changes at a decreasingly slower rate up to a dose rate of 6150 r/generation, the maximum used. Three curves are drawn among the points of the first, second, and third through fifth experiments respectively. A lowered division rate such as appears in the first and second runs (dots and X's) often occurs when an overgrown culture is subsequently brought to a steady state. Since the slopes of the curves are the same, the variation is accounted for by variation of the normal population and has nothing to do with radiation. In Run No. 1, because of equipment failure, the culture became overgrown twice before a steady state was finally obtained, and then the division rate remained within 2% of $\alpha = 0.443$ hr^{-1} for 49 generations before the x-rays were turned on. Run No. 2 was inoculated from No. 1 and shows the same effect due to irradiation except that the division rates were all higher, indicating some recovery. Run No. 3, inoculated from No. 2, is apparently normal in comparison with No. 4, which was started from a fresh culture. Run No. 5 was also started from a fresh culture, but through inadvertence it was allowed to grow to a population density of about 30×10^6 per ml before it was adjusted to a steady state at 5×10^6 ml. The division rate is slightly depressed with no exposure to radiation, but on the next day and thereafter the recovery appears complete. That this culture's initial growth did not take it into a highly overgrown condition may account for its more rapid recovery.

Table III

Steady-state growth rates of diploid *S. cerevisiae* under continuous exposure to x-rays

run no. symbol	1956-1957 Date	Dose rate (r/gen.)	β (hr^{-1})	$\frac{n}{n+m}$	α (hr^{-1})	$t_{1/2}$ (hr)
1 dot	Dec 9	0	0.443	0.985	0.450	1.540
	16	715	.374	.970	.386	1.794
	17	1305	.317	.958	.331	2.09
	19	1910	.255	.946	.270	2.57
	20	2975	.188	.926	.203	3.41
2 X	30	0	.496	.985	.503	1.376
	30	322	.470	.978	.481	1.440
	Jan 4	0	.493	.985	.500	1.384
	5	704	.435	.970	.448	1.543
	5	1088	.388	.962	.403	1.720
	6	1547	.332	.952	.349	1.985
3 ⊙	7	0	.508	.985	.516	1.343
	8-9	1291	.404	.958	.422	1.640
	9-10	500	.474	.974	.487	1.423
4 △	15	0	.523	.985	.531	1.304
	15	223	.503	.980	.513	1.350
	16	782	.421	.968	.434	1.596
	16	1404	.359	.955	.377	1.837
	16	2165	.308	.941	.327	2.12
	17	3960	.194	.907	.214	3.24
	18	5330	.185	.881	.210	3.30
	18	0	.506	.985	.514	1.347
5 ⊡	22	0	.477	.985	.485	1.428
	23	3725	.234	.911	.255	2.72
	25	2790	.247	.929	.266	2.60
	25-30	2515	.273	.934	.292	2.37
	30	3555	.247	.915	.270	2.57
	Feb 1-3	6150	.210	.868	.242	2.86

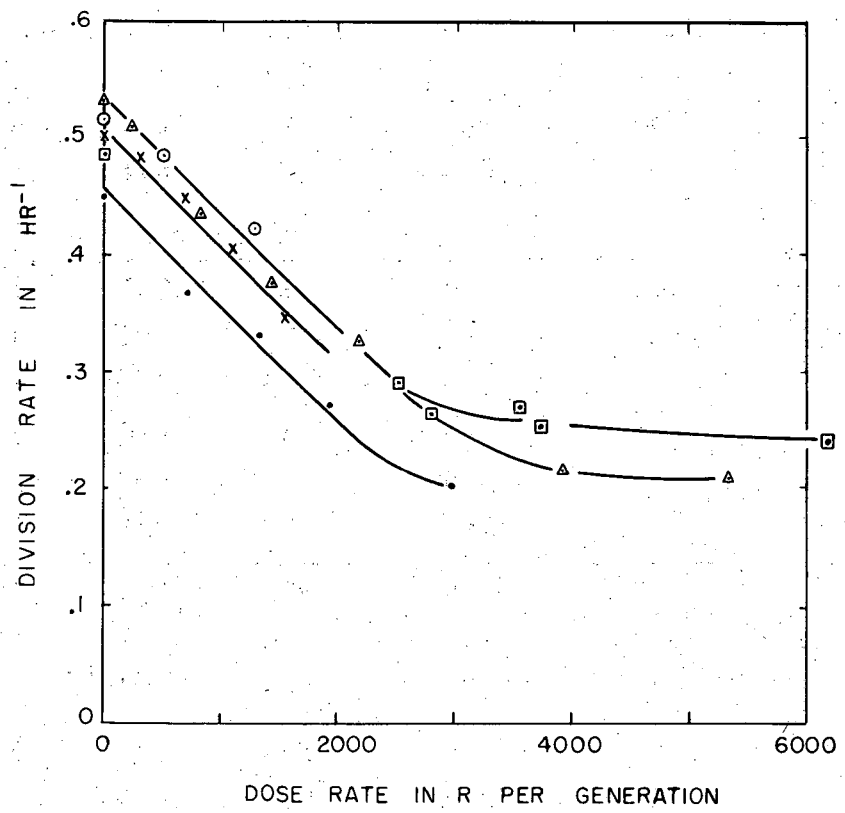

FIG. 14 DEPENDENCE OF DIVISION RATE ON DOSE RATE FOR DIPLOID *S CEREVISIAE* EXPOSED TO CHRONIC X-RAY IRRADIATION

MU-13326

c. Comparison with Data of Rubin

As mentioned in the introduction, Rubin has measured the effect of chronic exposure to x-and β-rays on the growth rate of E. coli in very carefully controlled batch cultures.[23] His observations of no effect in log phase of growth do not agree with the present results on yeast, and strongly suggest the conclusion that the fundamental process of low-dose chronic irradiation is different in yeast and in E. coli. No comparison can be made to his results of lag-phase delay with chronic radiation exposure, since the yeasts were never in lag phase.

d. Comparison with Data of Burns

For acute sublethal irradiation of single cells the commonly measured effect is division delay. Burns has measured this effect on diploid S. cerevisiae[51,52] and correlated the data with a model which he showed to be an improvement over Lea's model[53] based on Arbacia data by Henshaw. The model by Burns is based upon the assumption that a specific number of sites is concerned with delay and that delay is proportional to the fraction inactivated by radiation. In order to compare the chronic irradiation data and Burns's data one can calculate a continuously administered dose rate that would be equivalent to his acute dose. He showed that (a) practically all the delay appeared in only one generation and (b) there were a sensitive stage and a relatively insensitive stage which were fairly representative of conditions throughout the division cycle. In the absence of delay data covering all stages in a division cycle, let us assume that each of Burns's two stages is representative of one-half of a generation, and calculate the expected delay if exposure were made continuously. The two points that fall within the range of the continuous-exposure experiments are plotted as "B▽" in Fig. 15. There the data are the same as in Fig. 14 except that growth rates have been converted to generation times (column 7, Table III), and then the generation time with no exposure has been subtracted, which leaves a time that may be interpreted as average delay. The agreement is good with all data at intermediate doses, and quite good with Run No. 4 (△ plot) at the high dose. At the high dose rates the division delay levels off; again this agrees with Burns's model, which predicts a saturation-type function. Only at low dose rates--below 1500 r/generation time, where Burns has no data--do these results deviate from his theoretical curve. These data are concave upward, while Burns's model predicts a curve that is concave down.

Qualitatively the difference can be accounted for, at least in part, by a selective tendency of the continuous-culture technique. The effect of washout, a random process, on a population in which the new members always enter at zero time establishes an age distribution proportional to $e^{-\beta t}$. In a symmetrical distribution of division times of cells within this age structure there are, thus, fewer older members. Hence, the actual distribution of division times is weighted more heavily with the greater number of younger cells. The measured mean division time, therefore, is less than would actually be obtained for a population of cells uniform in age distribution. Burns showed that the width of the distribution of delay times increased with dose.[52] If the width of the distribution increased so that the change in division time were proportional to the dose, then only the slope and not the curvature of the

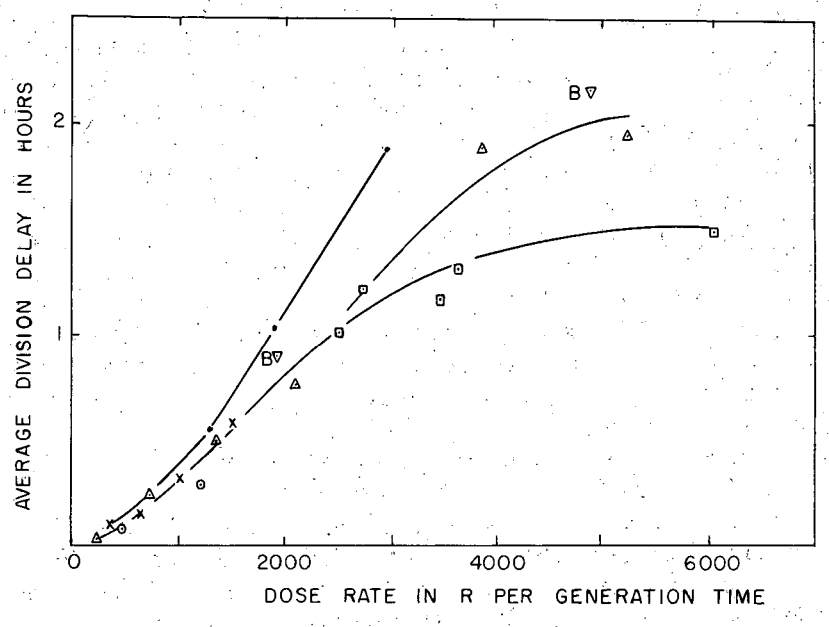

FIG.15 DEPENDENCE OF DIVISION DELAY ON DOSE RATE FOR DIPLOID *S. CEREVISIAE* EXPOSED TO CHRONIC X-RAY IRRADIATION

MU-13332

division-delay-vs-dose-rate curve would be affected. But if the width of the distribution increased with dose, so that the change in average delay time with dose increased, then a concavity upward as in Fig. 15 is possible. Division-delay data such as Burns's, or better, data taken with continuous irradiation of single cells at lower dose rates, are needed.

e. Comparisons with Data from Chronic Exposure of Animals.

As mentioned in the introduction (Section I A 1), several workers have observed on various animals under chronic exposure an increase in mortality per r which is approximately constant in the range 1 to $3 \times 10^{-4}\ r^{-1}$. Since Jones has commented on the generality of this,[54] an analogous figure was looked for in the data on yeast. The slope of the curve of division rate in hr^{-1} vs dose rate in r/hr has comparable dimensions of r^{-1}, but is not constant; this is as would be predicted from inspection of Fig. 14. Interestingly enough, however, the slope varies within the range -1 to $-4 \times 10^{-4}\ r^{-1}$, so the comparison is between mortality rate and division rate.

It is interesting to note that the data of Fig. 15 may be fitted quite well by the Gompertz equation $y = ab^{c^x}$; in fact the lowest curve there is described by

$$t = 1.52(0.0611)0.612^{(D/500 - 1)},$$

where t = average division delay in hr and

D = dose rate in r/hr.

This function has been useful in interpreting mortality data; however, no direct comparison can be made with the present data because the co-ordinates are different. In addition, no significance can yet be attached to the constants of the equation.

4. Recovery After Turning Off X-Rays

As with the establishment of a steady state under the influence of continuous exposure to x-rays, so also the recovery to normal average division rate takes several generations of time. Figure 16 shows both the division rate (Curve A) and the generation time (Curve B) as a function of the elapsed time after the x-rays at the rate of 6150 r/generation are turned off. The fact that reversion to normal is gradual is in agreement with the assumption of delay damage. Cells that are in the early stages of maturation after a division and that have only small doses accumulated at the termination of irradiation divide first. These lead the procession and hence dominate the population when it has regained normal division rate.

The fact that both attainment of steady state and recovery are delayed processes is a major criticism of batch-culture experiments and argues strongly for steady-state techniques.

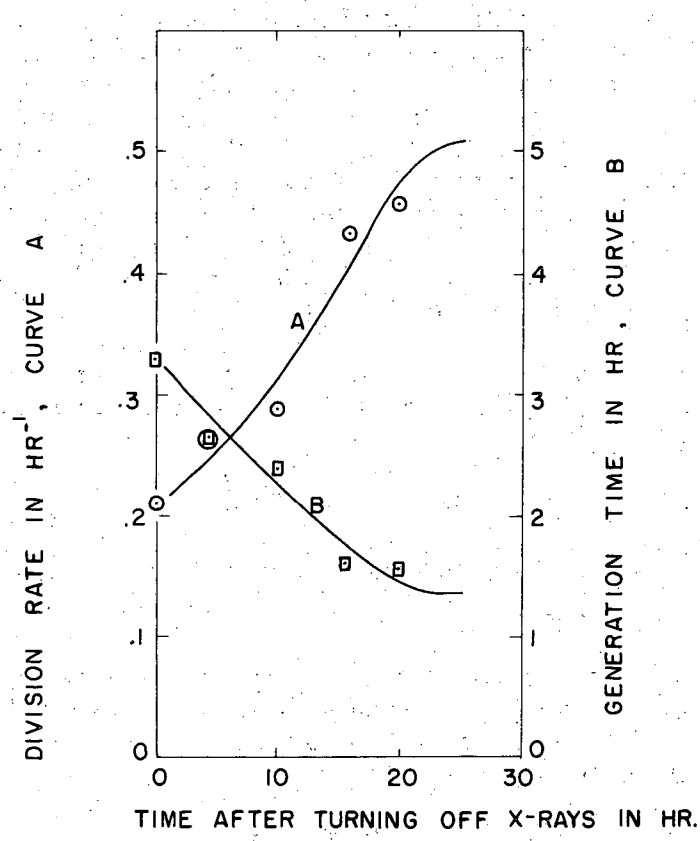

FIG. 16 RECOVERY OF YEAST CULTURE FROM STATE OF DEPRESSED DIVISION RATE UNDER EFFECTS OF 6150 R/GENERATION TO NORMAL DIVISION RATE AFTER TURNING OFF X-RAYS.

MU-13327

5. Absence of Acquired Resistance to Acute X-ray Exposure

Exposure of yeast to sublethal x-rays greatly enhances mitotic crossing over,[62] which in yeast is a major cause of genetic variation. When the exposure is continuous for many generations, the possibility exists for the selection of a variant better able to resist the damaging effects of radiation. Accordingly, percent survival was measured after acute exposure to 25 kr of several samples of unirradiated and long-term-irradiated cells taken from the steady-state culture. The results are summarized in Table IV.

Table IV

Viability of several samples after 25 kr acute radiation exposure

Dose rate (r/generation)	Total generations irradiated	No. of samples	Percent viable	Standard deviation, σ
0	-	2	56.4	1.0
2515	75	5	54.7	2.3
6150	115	1	58.8	-

There was apparently no dramatic change in radiation resistance as a result of the long chronic exposure, and if any small change exists, it is masked by the variation in the data. In an experiment comparable to this, Marcovich has irradiated E. coli for 60 generations and likewise found no indication of a lowering of radiosensitivity.[37]

6. Respiration Change

Warburg has presented evidence in support of a theory of cancer induction which attributes the effect to an irreversible damage to respiration and replacement of the energy lost thereby by increased fermentation,[57] fermentation being an energy producer at a lower level of cellular organization. Since the yeast's absorption spectrum in the visible region contains several bands due to the reduced cytochromes a, b, c, and d associated with respiration,[58] observations of decreases in these would lend support to Warburg's ideas.

A sample of cells approximately 1 mm thick by 8 mm in diameter from the culture grown for 115 generations with radiation rates up to 6150 r/generation was treated with one drop of sodium hydrosulphite, 300 mg/ml, and observed with a Zeiss-Winkel hand spectroscope using a microscope illuminating system.[59] No qualitative difference in spectrum between these cells and a comparison sample taken from an unirradiated culture could be detected; this indicates that the chroni-

cally irradiated cultures are still respiring. At the levels of irradiation used here quantitative spectral measurements and oxygen-consumption data are needed for better assessment of this effect.

7. General Discussion of Continuous Radiation Effect

One must be cautious in making generalizations concerning organisms far removed in complexity from the one on which measurements were made. The results of these experiments, however, indicate that a population as a whole may not be adversely affected in its ultimate ability to survive indefinitely under chronic exposure to irradiation. This conclusion holds for the yeast for dose rates delivering in a generation time up to approximately one-fourth of the LD_{50} for acute exposure. Obviously the individuals so exposed are detrimentally affected in their metabolic and reproductive abilities and longevity, as attested by the presence of dead cells in the irradiated steady-state populations. But the ability of organisms to produce several progeny before dying must be reduced drastically before their capacity to continue to fill their environment is destroyed.

E. Division-Synchrony Attempt by Pulsed Irradiations

If large populations of cells dividing synchronously were available, they would constitute a very useful tool for experiments designed to correlate changes in chemical composition with the various stages of cell division. An hypothesis that cell division occurs only when (a) a critical mass of protoplasm is reached and (b) a division-trigger mechanism is set off suggests that synchrony might be achieved by subjecting the cells first to one part of a cyclic treatment, in which the trigger act could be delayed until all cells had reached the critical mass, then to the other part, in which the divisions would be triggered in synchrony.

To date, the most successful attempts at cell division synchrony by this method have been made by Scherbaum and Zeuthen, who subjected *Tetrahymena pirformis* to periodic temperature cycling.[60] In yeast cells partial synchronization was found in the first division after prolonged starvation procedure by Beam et al.[49] More recently Burns[51] has subjected diploid yeast to a variety of periodic chemical, physical, and feeding treatments, but without appreciable success in producing many repeated synchronous cycles.

Under the effects of radiation, yeast cells are observed to undergo division delay that varies widely with the stage of maturation. Although the dependence is unknown, it seems plausible that if periodic radiation pulses of the right intensity were synchronized with the division rate of a growing culture, the sensitive cells could be delayed selectively and might be induced to bunch at a time when they were least affected by the radiation exposure.

The testing of this idea can be done in the continuous-culturing equipment, which appears to be ideally suited. Intermittent exposure to x-rays is accomplished by control equipment described in Section

III A 7. The exposure data summarized in Table V were obtained when the average division time and the irradiation-cycle times were matched.

Table V

Times and doses used in intermittent-exposure experiments

Division time (hr)	Irradiation period (hr)	Dose delivered (r/pulse)	Duration of run (generations)
1.5	0.17	650	16
1.5	0.17	860	16
1.75	0.20	990	4
2.0	0.25	1240	12
2.0	0.33	1660	11

Unfortunately the experiments were unsuccessful - no cycling of population density with time was observed. However, more work could be done in this field; the possibilities have not been exhausted.

V. SUMMARY

All observations concern continuous culture of diploid Saccharomyces cerevisiae.

1. Without radiation, the division rate of growing cultures was sensitive to rapid changes in nutrient environment, as a consequence of either its own proliferation or a change in supply of nutrient. This sensitivity makes continuous culture superior to batch culture for division-rate studies, since in the first case the cell culture is under constant environmental conditions while in the second it is not. (Section IV B.)

2. Without radiation, a damped oscillation of population density was observed under growth-limiting environmental conditions prior to the establishment of steady-state populations. Alternate periods of cell division and cell lysis made up the oscillations. (Section IV C.)

3. With continuous exposure to x-rays, the cell-division rate falls off with dose rate at 10^{-4} hr^{-1} r^{-1} generation, out to about 2500 r/generation. Then it tends to level off up to 6150 r/generation. (Section IV D 3.)

4. With continuous exposure to x-rays, the increase in average cell size and decrease in division rate that took place required several generations for attainment of a steady state, as also did the return to normal after the irradiation was turned off. (Sections IV D 2, IV D 3, and IV D 4.)

5. In terms of division delay, the results of Item 3 above agree with Burns's data above a dose rate of 1500 r/generation, but not below; below this dose rate the division delay under the continuous irradiation does not continue to decrease so rapidly with decreasing dose. Interpretation of the effects noted here will require a more complicated model. (Section IV D 3.)

6. No acquired resistance to acute x-ray exposure was obtained after long-continued exposure to x-rays. (Section IV D 5.)

7. No qualitative change of respiratory-enzyme spectrum was observed after long-continued exposure to x-rays. (Section IV D 6.)

8. Simple cycling of x-ray exposure does not appear to lead to division synchrony. (Section IV E.)

9. With no x-ray exposure, 98.5% of the cells were viable, and with exposure to 6150 r/generation this amount dropped to 87%. The dependence was more nearly logarithmic than linear. (Section IV D 3.)

10. Populations of Saccharomyces cerevisiae can live in a steady state of proliferation while continuously exposed to x-radiation up to at least 6150 r/generation (about 2000 r/hr). This is a dose per generation equal to about one-fourth of LD_{50} for acute exposure. After the initial few generations there seems to be no morphological indication that the population is impaired in its ability to continue propagation and metabolic activities indefinitely.

VI. ACKNOWLEDGMENTS

The author wishes to express his deep appreciation for guidance and inspiration given so generously by Professor Cornelius A. Tobias throughout the course of this work. Also many thanks are due Dr. Robert K. Mortimer and Dr. Ann C. Birge for valuable consultation and advice.

Appreciation is also extended to the directors of Donner Laboratory and to the Atomic Energy Commission for making available laboratory space and equipment for this work.

This work was supported in part by the U. S. Atomic Energy Commission.

VII. BIBLIOGRAPHY

1. Lawrence H. Snyder, What We Most Need to Know, Sci. Monthly 84, 17-23 (1957).

2. Julius Stoklasa and Josef Penkava, Biologie des Radiums und Uraniums (Paul Parey, Berlin, 1932), p. 185-198.

3. Robert D. Boche, Observations on Populations of Animals Exposed to Chronic Roentgen Radiation, Atomic Energy Project, University of Rochester, Report No. MDDC-204 (1946). Also in Biological Effects of External Radiation, Henry A. Blair, ed. (Mc-Graw-Hill, New York, 1954), Chapt. 10.

4. P. S. Henshaw, Experimental Roentgen Injury. IV. Effects of Repeated Small Doses of X-rays on Blood Picture, Tissue Morphology, and Life Span in Mice, J. Nat'l. Cancer Inst. 4, 513-522 (1944).

5. George A. Sacher, The Survival of Mice Under Duration-of-Life Exposure to X-rays at Various Dose Rates, Metallurgical Laboratory, University of Chicago, CH-3900, April 1950.

6. George A. Sacher, Preliminary Report: A Comparative Study of of Radiation Lethality in Several Species of Experimental Animals Irradiated for the Duration of Life, Argonne National Lab. Quarterly Report, ANL-4488, July 1950, p. 105-122.

7. Austin M. Brues and George A. Sacher, Analysis of Mammalian Radiation Injury and Lethality, in Symposium on Radiobiology, James J. Nickerson, Ed. (Wiley, New York, 1952), p. 441-465.

8. Lorenz, Jacobson, Heston, Shimkin, Eschenbrenner, Deringer, Doniger, and Schweisthal, Effects of Long-Continued Total-Body Gamma Irradiation on Mice, Guinea Pigs, and Rabbits. III. Effects on Life Span, Weight, Blood Picture, and Carcinogenesis and the Role of the Intensity of Radiations, in Biological Effects of External X and Gamma Radiation, R. E. Zirkle, Ed. (Mc-Graw-Hill, New York, 1954), Chapt. 3, Part I.

9. Spargo, Bloomfield, Glotzer, Gordon, and Nichols, Histological Effects of Long-Continued Whole-Body Gamma Irradiation of Mice, J. Nat'l. Cancer Inst. 12, 615-655 (1951).

10. W. L. Russell, X-Ray-Induced Mutations in Mice, Cold Spring Harbor Symposia Quant. Biol. 16, 327-336 (1951).

11. Ernst Caspari and Curt Stern, The Influence of Chronic Irradiation with Gamma Rays at Low Dosages on the Mutation Rate in Drosophila melanogaster, Genetics 33, 75-95 (1948); also in Biological Effects of External Radiation, Henry A. Blair, Ed (Mc-Graw-Hill, New York, 1954), Chapt. 15.

12. D. E. Uphoff and C. Stern, The Genetic Effects of Low-Intensity Irradiation, Science 109, 609-610 (1949); also in Biological Effects of External Radiation, Henry A. Blair, Ed. (Mc-Graw-Hill, New York, 1954), p. 397-399.

13. Warren P. Spencer and Curt Stern, Experiments to Test the Validity of the Linear R-Dose/Mutation Frequency Relation in Drosophila at Low Dosage, Genetics 33, 43-74 (1948).

14. W. Ralph Singleton, The Effect of Chronic Gamma Radiation on Endosperm Mutation in Maize, Genetics 39, 587-603 (1954).

15. W. Ralph Singleton, Effect of Continuous Gamma Radiation on Mutation Rate in Maize, Genetics 36, 575-576 (1951).

16. Arnold H. Sparrow and W. Ralph Singleton, The Use of Radiocobalt as a Source of Gamma Rays and Some Effects of Chronic Irradiation on Growing Plants, Am. Naturalist 87, 29-48 (1953).

17. Karl Sax, The Cytological Effects of Low-Intensity Radiation, Science 112, 332-333 (1950).

18. Bruce Wallace, Studies on Irradiated Populations of Drosophila melanogaster, J. Genet. 54, 280-293 (1956).

19. A. A. Buzzati-Traverso, Evolutionary Changes in Components of Fitness and Other Polygenic Traits in Drosophila melanogaster Populations, Heredity 9, 153-186 (1955).

20. Spoerl, Loveless, Weisman, and Balske, Studies in Cell Division. II. X-Radiation as a Division-Inhibiting Agent, J. Bact. 67, 394-401 (1954).

21. E. Spoerl and R. J. Balske, Studies on Cell Division. I. Alpha Radiation as a Division-Inhibiting Agent. Mound Laboratory Report No. MLM-820, Apr. 1953.

22. Kirkland C. Brace, Effects of X-Rays on Size of Yeast Cells, Proc. Soc. Exptl. Biol. Med. 74, 751-755 (1950).

23. B. A. Rubin, Growth and Mutation of Bacteria During Continuous Irradiation. J. Bact. 67, 361-368 (1954).

24. Frederick E. Smith, Quantitative Aspects of Population Growth, in Dynamics of Growth Processes, Edgar J. Boell, Ed. (Princeton University Press, 1954), Chapt. XIII.

25. Bransom, Dunning, and Millard, Kinetics of Crystallization in Solution, Part I, Discussions Faraday Soc. 5, 83-95 (1949).

26. S. H. Bransom and W. J. Dunning, Kinetics of Crystallization, Part II, Discussions Faraday Soc. 5, 96-103 (1949).

27. J. Monod, La Technique de Culture Continue, Theorie et Applications, Ann. inst. Pasteur 79, 390-410 (1950).

28. Aaron Novick and Leo Szilard, Description of the Chemostat, Science 112, 715-716, (1950).

29. Vernon Bryson and Waclaw Szybalski, Microbial Selection. Part II. The Turbidostatic Selector--A Device for Automatic Isolation of Bacterial Variants, Science 116, 45-51 (1952).

30. Herbert E. Kubitschek, Modifications of the Chemostat., J. Bact. 67, 254 (1954).

31. John H. Northrop, Apparatus for Maintaining Bacterial Cultures in the Steady State, J. Gen. Physiol. 38, 105-115, (1954).

32. Paul A. Anderson, Continuous Recording of the Growth of Microorganisms Under Turbidostatic and Chemostatic Control, Rev. Sci. Instr. 27, 48-51 (1956).

33. P. G. DeHaan and K. C. Winkler, An Apparatus for the Continuous Culture of Bacteria at Constant Generation Times. Antonie van Leeuwenhoek, J. Microbiol. Serol. 21, p. 33-44 (1955).

34. C. J. Perret, An Apparatus for the Continuous Culture of Bacteria at Constant Population Density, J. Gen. Microbiol. 16, 250-264 (1957).

35. R. Jeener, Ribonucleic Acid and Protein Synthesis in Continuous Cultures of Polytomella caeca, Arch. Biochem. and Biophysics 43, 381-388 (1953).

36. Aaron Novick, Mutagens and Antimutagens, in Brookhaven Symposia in Biology: No. 8, Mutation, 1956, p. 201-215.

37. H. Marcovich, A Study of a Population of Lysogenic Bacteria Growing in a Constant Field of γ-Radiation, in Progress in Radiobiology, Mitchell, Holmes, and Smith, Eds. (Oliver and Boyd, Edinburgh, 1956), p. 236-240.

38. Aaron Novick and Leo Szilard, Experiments with the Chemostat on Spontaneous Mutations of Bacteria, Proc. Nat'l. Acad. Sci. 36, 708-719 (1950).

39. R. K. Finn and R. E. Wilson, Population Dynamics of a Continuous Propagator for Microorganisms, Agr. Food Chem. 2, p. 66-69, (1954).

40. E. O. Powell, Growth Rate and Generation Time of Bacteria with Special Reference to Continuous Culture, J. Gen. Microbiol. 15, 492-511 (1956).

41. Herbert, Elsworth, and Telling, The Continuous Culture of Bacteria: A Theoretical and Experimental Study, J. Gen. Microbiol.

14, 601-622 (1956).

42. Raymond E. Zirkle and Cornelius A. Tobias, Effects of Ploidy and Linear Energy Transfer on Radiobiological Survival Curves, Arch. Biochem. Biophys. 47, 282-306 (1953).

43. John Strong, Procedures in Experimental Physics (Prentice-Hall, New York, 1939), p. 446.

44. Phototube Application Data, Electronic Tubes, Industrial Types, General Electric Co. Electronics Dept. publ., Schenectady, N.Y. No. ETI-117, 1945, p. 1-6.

45. Radio Amateur's Handbook, 28th Ed. (The Rumford Press, 1951), Table 9-1.

46. Frederick E. Terman, Radio Engineers' Handbook, 1st ed. (McGraw-Hill, New York, 1943), p. 398, 614.

47. Radiotron Designer's Handbook, 4th ed., F. Langford-Smith, Ed., (Wireless Press, Sydney, Australia, 1952), p. 1218, 786.

48. Robert K. Mortimer, Cytological and Environmental Factors Related to the Effects of Radiations on Yeast Cells (Thesis), University of California, Berkeley, 1953.

49. Beam, Mortimer, Wolfe, and Tobias, The Relation of Radioresistance to Budding in Saccharomyces cerevisiae, Arch. Biochem. Biophys. 49, 110-122 (1954).

50. R. K. Finn and R. E. Wilson, Population Dynamics of a Continuous Propagator for Microorganisms, Agr. and Food Chem. 2, 66-69 (1954).

51. Victor W. Burns, Physical Studies of Cell Division. Statistical Fluctuations; Effects Due to X-Radiation, Temperature, and Hydrostatic Pressure (Thesis), University of California, Berkeley, 1954.

52. Victor W. Burns, X-Ray-Induced Division Delay of Individual Yeast Cells, Rad. Res. 4, 394-412 (1956).

53. D. E. Lea, Actions of Radiations on Living Cells (Cambridge University Press, Cambridge, England, 1955), Chapt. VIII.

54. Hardin B. Jones, Factors in Longevity, Kaiser Foundation Med. Bull. 4, 329-341 (1956).

55. Dale S. Davis, Empirical Equations and Nomography (McGraw-Hill, New York, 1943), p. 57-61.

56. Austin M. Brues and George A. Sacher, Analysis of Mammalian Radiation Injury and Lethality, in Symposium on Radiobiology,

James J. Nickerson, Ed. (Wiley, New York, 1952), p. 441-465.

57. O. Warburg, On the Origin of Cancer Cells, Science 123, 309-314 (1956).

58. Ernest Baldwin, Dynamic Aspects of Biochemistry, 2nd Ed. (The University Press, Cambridge, 1952), p. 174-176.

59. R. Lee Gunther, Donner Laboratory, University of California, private communication of his technique.

60. Q. Scherbaum and E. Zeuthen, Exptl. Cell. Res. 6, 221 (1954).

61. C. A. Tobias, University of California Radiation Laboratory, private communication.

62. Allen P. James, A Genetic Analysis of Sectoring in Ultraviolet-Induced Variant Colonies of Yeast, Genetics 40, 204-213 (1955).