UCRL 3778

UNIVERSITY OF CALIFORNIA

Radiation Laboratory

TWO-WEEK LOAN COPY

This is a Library Circulating Copy which may be borrowed for two weeks. For a personal retention copy, call Tech. Info. Division, Ext. 5545

BERKELEY, CALIFORNIA

DISCLAIMER

This document was prepared as an account of work sponsored by the United States Government. While this document is believed to contain correct information, neither the United States Government nor any agency thereof, nor the Regents of the University of California, nor any of their employees, makes any warranty, express or implied, or assumes any legal responsibility for the accuracy, completeness, or usefulness of any information, apparatus, product, or process disclosed, or represents that its use would not infringe privately owned rights. Reference herein to any specific commercial product, process, or service by its trade name, trademark, manufacturer, or otherwise, does not necessarily constitute or imply its endorsement, recommendation, or favoring by the United States Government or any agency thereof, or the Regents of the University of California. The views and opinions of authors expressed herein do not necessarily state or reflect those of the United States Government or any agency thereof or the Regents of the University of California.

UCRL-3778

UNIVERSITY OF CALIFORNIA

Radiation Laboratory
Berkeley, California

Contract No. W-7405-eng-48

A FRACTIONAL-MILLIMICROSECOND OSCILLOSCOPE UTILIZING COMMERCIALLY AVAILABLE COMPONENTS

C. Norman Winningstad

September 1957

Printed for the U.S. Atomic Energy Commission

A FRACTIONAL-MILLIMICROSECOND OSCILLOSCOPE UTILIZING COMMERCIALLY AVAILABLE COMPONENTS

C. Norman Winningstad

Radiation Laboratory
University of California
Berkeley, California

September 1957

ABSTRACT

Equipment for use with signal rise times slower than a millimicrosecond (10^{-9} second, usually abbreviated mμsec) is readily available commercially. Recent advances in high-energy physics have directed attention toward research in the fractional mμsec region. The fundamental tools for such research are signal generators and oscilloscopes. Suitable signal generators are commercially available, but suitable oscilloscope systems are not. There are two important factors that account for the lack of such oscilloscopes. One is that contemporary amplifiers are useless in the fractional-mμsec region. The second is that commonly used trigger circuits possess too great a sensitivity of output timing to changes in input amplitude.

This paper describes an internally synchronized oscilloscope system utilizing commercially available components, which provides less than 2% signal reflection at the sync take-off point, and has less than 5×10^{-12} second of sweep-timing change per percent change in input amplitude (for amplitudes in excess of 30 trace widths).

A FRACTIONAL-MILLIMICROSECOND OSCILLOSCOPE UTILIZING COMMERCIALLY AVAILABLE COMPONENTS

C. Norman Winningstad

Radiation Laboratory
University of California
Berkeley, California

September 1957

INTRODUCTION

With the advent of commercially available traveling-wave (TW) type cathode-ray tubes[1] (CRT) that possess reasonable deflection sensibilities and writing rates, it has become feasible to have fractional-millimicrosecond (mμsec) oscilloscopes. Because there are no commercially available amplifiers for such fast rise times, and because reasonably priced laboratory fractional-mμsec amplifiers are still in the distant future, the built-in sensibility and deflection factor of the TW CRT limit the vertical signal deflection.

The major need that can be realized now is in the sweep and unblanking circuits. The principle disadvantages of ordinary sweep and unblanking schemes are:

(a) the lack of an internal synchronization system that abstracts only a small amount of energy from the signal to be observed, thus causing small distortion to the signal, and yet has a trigger sensitivity useful with a signal having an amplitude of a few tens of trace-widths;

(b) a slow starting time which requires long trigger pulses or high-amplitude impulses;

(c) starting-time jitter;

(d) the lack of a reasonably linear sweep speed fast enough to make use of the rise-time capabilities of the TW structure;

(e) an excessively long over-all time delay in starting the sweep and unblanking that which forces the use of bulky low-loss transmission lines to delay the vertical signal.

The first three above-mentioned shortcomings are strongly interdependent, and are influenced mainly by the design of the input stage of the sweep-and-unblank unit. The fourth is mainly dependent upon the design of the output stage, and the fifth is a characteristic of the whole sweep-and-unblank unit and also involves the time of flight of electrons from the CRT cathode to the deflection structure.

---

[1] Dumont's K1421P-; Rauland's version of the TW11; and Edgerton, Germeshausen, and Grier's 2236.

METHODS AND APPARATUS

The above-mentioned problems have been reduced to the degree indicated in Table I. Utilizing commercially available parts throughout and fast-circuit construction techniques, anyone with about $3000 can now have a fractional-mμsec oscilloscope.

TABLE I

Oscilloscope - assembly characteristics

No.	Item	Value	Units
1	Fastest observed rise time with negligible over shoot (a function of both the pulse generator and the TW CRT).	3/8	mμsec (10^{-9} sec)
2	Total vertical signal delay cable to allow sweep start and unblank (normal signals appear on useful part of sweep)	< 22	mμsec
3	Nominal vertical signal reflection due to the internal synchronization take-off system	2	%
4	Vertical sensitivity Sensibility (with single-sweep spot visibility)	32 or 0.8	v/cm v/spot
5	Maximum sweep speed (consistent with linearity rating below)	2/3 or 14	mμsec/cm psec/spot (10^{-12} sec)
6	Sweep linearity at the screen (variation in spot velocity averaged over any one in six, compared with the average of the six)	± 5	%
7	Sweep jitter (for 1% change in 30 or more spots of input-step amplitude, or about 25 v, at maximum sweep speed).	5 0 or 1/3 or 1	psec/%sig spot/%sig V spot/ H spot
8	Maximum repetition rate (limited by dissipation in sweep output stage)	10	kc (10^3 cps)

The general scheme shown in the block diagram, Fig. 1 was worked out in detail for use with the Dumont K1421P11M CRT. The characteristics of the K1421 are listed in Table II.

TABLE II

Manufacturer's Data: K 1421P11M TW CRT

No.	Item	Value	Units
1	Accelerating voltage (cathode to deflection section)	10	kv
2	Post-accelerating voltage (deflection section to screen)	35	kv
3	Post-accelerating spiral resistance	150 to 400	meg
4	Electrostatic-focusing electrode voltage	4.2 to 5.6	kv
5	Control-grid extinction voltage	75 to 125	v
6	Vertical-deflection sensitivity (TW)	70 to 100	v DC per in
7	Vertical field (min)	3/4	in
8	Vertical-deflection system nominal inpedance	50	ohms
9	Horizontal-deflection sensitivity	245 to 305	v DC per in
10	Horizontal field (min)	3.5	in
11	Writing ability (time per spot-width to allow photographing a single transient, in pico seconds, or 10^{-12} seconds)	2	psec/spot
12	spot size	0.006	in

This scheme should work well with a TW11-type CRT. Modification of the output stage will be required for use with the 2236 CRT.

The method used for abstracting energy from the signal for internal synchronizing purposes is a refinement of that used in ordinary oscilloscopes. A resistor is utilized to provide isolation from, and to limit the loading of, the signal channel. The resistor is connected by a lead about 1/8 inch long to the center conductor of the signal coaxial lead by inserting the resistor through a hole in the outer conductor. The ohmic size of the resistor is determined by the permissible per-unit loading of the signal coaxial cable, and by the characteristic impedance of the signal cable.

The resistor is chosen for low end-to-end capacity and is arranged to have a reasonably small radial capacity to ground. One effect of an uncompensated capacity associated with the resistor would be a serious reflection on the signal cable, owing to what amounts to an excessive capacity per unit length, over a short length of the cable. This effect can be compensated[2] by increasing the inductance or decreasing the capacity, per unit length, over a short distance, in the region of the resistor's contact to the center conductor. Within the rise-time limitations of presently existing TW CRT's, appropriate compensation may be readily obtained for the capacity effects of ordinary 1/2-w composition resistors. One convenient method of obtaining compensation is to use the constant-size inner conductor of a standard signal cable, but to use a foil-section outer-conductor. Figure 2 shows drawings of the take-off system. By observing the reflection from the sync take-off section due to a large (1000-v) fast-rising "step" function, one can adjust the outer-conductor geometry to reduce the reflection to the order of a percent. It is not practical to go much beyond this point, because there is a resistive discontinuity due to the shunting effect of the sync take-off resistor. Although it is true that suitable series resistance could also be used to compensate for the shunt effect, the series resistors would introduce extra attenuation (possibly a problem when passing the signal through many TW CRT units in series) and greatly complicate the construction of the unit. It is not unreasonable to keep the shunt-resistance reflection down to the order of a percent, and hence this problem is usually not serious enough to warrant compensation.

In a system as described above, the shunt resistance is on the order of thousands of ohms. The impedance level of suitably fast circuitry is on the order of a few hundred ohms at most. Thus the take-off resistor can be considered conveniently as a Norton equivalent-current source, as far as the sweep and unblanking input circuitry is concerned. The resulting current level is on the order of tens of milliamperes, with an input of a few tens of spot-widths. The sweep and unblank outputs required by the TW CRT are each on the order of amperes.

The system then must provide a large gain, saturation in a prescribed manner at the required output level, and an input amplitude and rate threshold. The first two factors are required in order to provide outputs that are substantically

---

[2] I. A. D. Lewis and F. H. Wells, Millimicrosecond Pulse Techniques (McGraw-Hill, New York, 1954), p. 31.

independent of the manner in which the input exceeds the threshold, and the threshold is necessary to allow the system to have a high gain and yet be able to tolerate a reasonable noise level. Although high-gain overloading amplifiers could be used, contemporary trigger circuits provide a system with a shorter total delay time. In typical regenerative trigger devices, a time delay with respect to a normal input trigger signal is associated with the appearance of the 10% to 90% portion of the initial rise of the output signal. This time is in excess of the simple transit time through the vacuum tube(s) involved. The time delay may be from 3 to 30 or more times the transit time (typically 1mμsec); however, the jitter with a constant input amplitude is reasonably small. The difficulty arises from the fact that the input capacity of the trigger stage is charged at a rate dependent upon the input-signal amplitude. With a representative input step function, the charging process continues during the regenerative period of the trigger device. The time delay associated with the regenerative process depends strongely upon the input charge-time program during the regenerative build-up. Thus a change in input-signal amplitude changes the time of firing of the trigger. In addition, if the input signal rises slowly, the firing time is later than with a step input. The specifications adhered to for the present design were: (a) for pulses of the same shape and of tens of spot widths high, a change in amplitude of one spot width should not change the timing more than ~~a few tenths of~~ a spot width; (b) for input signals with rise times up to 10 times the TW CRT's rise time, but rising at least a few tens of spot widths, the signal should appear after the beginning of the useful portion of the trace. (The idea is that for slower signals, one would not mind putting an additional delay in the vertical signal path, or using slower oscilloscope, as a signal that slow does not require the ultimate capabilities of the fractional-mμsec TW CRT).

Figure 3 shows the input-stage system used, in simplified form. The rise-time requirements of the current amplification stage are not too restrictive, since the available trigger stage has a time delay and output rise time of a few mμsec. The current-gain stage utilizes a transformer-driven grounded-grid amplifier. The use of an input transformer has the advantage of allowing convenient trigger polarity change, as well as providing a current gain from the sync take-off resistor to the grounded-grid amplifier. The input resistance of the grounded-grid stage is nominally 20 ohms. It was found that best results were obtained with a 2:1 turns ratio, which reflects nominally 80 ohms from the sync take-off resistor to ground. With higher or lower turns ratios, the balance between capacity and leakage reactance was not so favorable for the given core, grounded-grid amplifier, and trigger stage. A tapered-line impedance-transforming system was considered, and a simple version constructed. As was expected, the impulse response of the trigger stage is so

slow that in order to preserve sensitivity, the input tapered line would be prohibitively long, both in physical size and in time delay. Because the grounded-grid stage does not have to handle large signals, and because its transconductance is a function of plate current, the grounded-grid stage is operated at zero bias, and the plate current and plate voltage are limited by dissipation. There is another transformer between the plate of the grounded-grid stage and the trigger stage. This second transformer is an inphase 2:1 step-down unit, providing further current gain. Both ferrite-core transformer units provide considerably less than 2-mμsec rise times to step-function inputs.

The trigger stage (shown in Fig. 4) is a modified Moody[3] circuit. The shunt diode shorts out the dynode to-grid feedback path. Thus the regenerative path is disabled until the signal supplies enough positive signal through the series diode to shut off the shunt diode. This arrangement has proven to be quite stable. The adjustment is checked once a month just to be certain the trigger has not drifted away from the most sensitive point. It has never drifted to a free-running condition, and the drift away from the most sensitive point has never been enough to fail to trigger with a 2-v input step applied to the sync take-off system. The minimum-step trigger for the system is typically 0.5 v. The time-delay characteristics of the complete system are shown in Figs. 5 and 6. The "light pulser"[4] referred to in the figures furnishes an electrical output of perhaps less than 10^{-10} sec duration. The advantage over the Moody design lies in increased sensitivity, but the price paid for this is a smaller output current, and slower starting time. The original Moody circuit required a 6-v step signal at the trigger input, and the output was just under 1 amp, with a delay and rise time of about 2 mμsec. The modified version requires about a 100 mv step at the trigger input, and the output is somewhat under 1/3 amp, with a delay of about 2 mμsec and a rise time of 5 mμsec (at a nominal 500-ohm output-impedance level). The trigger-stage output transformer delivers about +1/2 amp at a nominal 125-ohm impedance level.

The tube types used in the driver stage (shown in Fig. 7) were selected on the basis of their ability to provide output currents of 2 amp each, with a relatively small grid base. The grid input system is a 125-ohm constant-K transmission line.

---

[3]Moody, McLusky, and Deighton, Millimicrosecond Pulse Techniques, Electronic Engineering 24, 214-9 (1952).

[4]Quentin A. Kerns, A Generator of Fast-Rising Light Pulses, to be published.

The line may be terminated in either a 125-ohm resistor, or a 125-ohm transmission line, allowing convenient monitoring of the trigger-stage output. The grid-line output is about 70 v with no filament power applied to the distributed amplifier, and 40 v when grid current loads down the line in normal operation. The grid-line delay is about 1.3 mμsec. Figure 8 shows the wave forms involved up to this point. The anode line delivers the current output of both tubes to the load; i.e., there is no reverse anode-line termination. This is permissable because by arranging the load impedance down the line as a harmonic progression, there are nominally no reflections.[5] The section of the line between the tubes is nominally 66 ohms, and is made up of 2 sections in order to provide the same time delay as is built into the grid line. The load for the driver unit is the unblank tube and a 50-ohm coaxial line to the sweep output stage, resulting in a net 33 ohms, when the load is driven through the 1:1 polarity-inverting transformer. The adjustment of the distributed-amplifier lines is noncritical, as a result of the highly nonlinear operation of the unit. The driver has an output rise time of about 2 mμsec, and a duration of up to 50 mμsec. Shorter durations may be obtained by putting a clipping line in place of the 125-ohm termination on the driver-stage grid line.

The unblank stage (shown in Fig. 9) consists of a single grounded-cathode pentode. The output current is about 1 amp into a 125-ohm coaxial line. The sweep and unblank chassis is located physically close to the TW CRT's cathode and grid connections, in order to keep the length of the unblank transmission line short, thus minimizing the unblank time delay. Because the TW CRT's cathode-grid potential level is usually high (-10 KV), a special transmission-line coupling capacitor[6] was developed to allow the unblank stage to be at ground potential. A similiar arrangement allows the unblank pulse to return to ground, so that the pulse can be terminated: (1) in a resistor for normal operation; (2) in a shorted stub for special cases where unblank times shorter than the driver gate width are desired; or (3) in a 125-ohm cable, allowing monitoring of the unblank signal. The time required for the TW CRT to unblank (the time required to go from just perceptible trace to full bright trace) is about 1 mμsec.

---

[5] Ginzton, Hewlett, Jasberg, and Noe, "Distributed Amplification", Proc. IRE 36, 956-67 (1948).

[6] Q. A. Kerns and F. A. Kirsten, "A Transmission-Line Coupling Capacitor for Millimicrosecond Use", to be published.

The 50-ohm coaxial line from the driver to the sweep output stage is used to provide a delay time to account nominally for the time of flight of the electrons through the TW CRT electron gun to the deflection structure. The exact timing may be worked out on the basis that the unblanked portion of the trace should appear somewhat after the sweep start, such that the nonlinear start of the sweep will not be visible. There are cases, however, when it is desirable to deliberately unblank before the sweep starts, and continue to hold the unit unblanked at the nonlinear end of the sweep. Such a case can occur when employing external synchronization and if the signal-path time delay is not well known (such as the time of flight of electrons through a photomultiplier); under these conditions the signal might not appear on the usual portion of the trace, and one would like to know if the signal is early or late.

The sweep output stage employs 2 pentodes in parallel in a grounded cathode circuit as shown in Fig. 10. The tubes are mounted on a special subassembly which plugs into the coaxial connector, built into the CRT neck, for connection to the left hand horizontal deflection plate. Figure 11 shows the sweep mounted on the CRT. The right hand deflection plate should be returned to the deflection-structure shield through a suitable damping resistor or coaxial cable. The use of a coaxial cable allows convenient monitoring of the charging current to the horizontal-deflection plates. As a first approximation, this current should be constant, and hence one should view a nominally flat-topped pulse coming from the right-hand terminating cable. The sweep output tubes are operated near the emission-limited region. If all voltage sources (including the filaments) are regulated, then the sweep output stage supplies a quite stable constant-current pulse to the sweep deflection system. The horizontal-deflection plates (not a TW structure; conventional plates are usually employed) have about 2 pf (10^{-12} farad) mutual capacity and 3 pf each shunt-to-ground capacity. The total capacity load as seen by the sweep output stage is about 8 pf, including 3 pf of stray capacity from the coupling capacitor to ground. The output capacity of each pentode (allowing 1 pf each for parasitic capacities) is about 4 pf. Thus, of the total emission current, about half goes to charge up tube capacities, and half to the deflection system. Of the half delivered to the deflection system, about 2/5 is actually used to produce a sweep (current delivered to the deflection-plates mutual capacity). With each pentode delivering about 1.5 amp of plate current, about 0.6 amp is delivered to the deflection mutual capacity, resulting in a sweep speed of 1/3 mμsec per cm, or 6.7 psec per spot width. This represents the maximum

speed of the present circuit, and the sweep nonlinearity is about 30%. This sweep rate is fortunately faster than is consistent with the TW CRT's rise time. Consider 20 spot widths rising in 1/3 mμsec, the rise should be displayed at 45° for convenient viewing. This is a speed of 16.7 psec per spot width or about 1 mμsec per cm. Because this is considerably slower than the maximum rate, additional trimmer capacity could be added. This capacity can be used as a vernier sweep-speed adjustment and to assure that a given speed may be attained, even though the sweep output tubes are aged or replaced with slightly inferior units. The fastest normal rate now used is 2/3 mμsec per cm, which has 5% rate nonlinearity. Figure 12 shows the wave forms associated with the output stages. The limitations on linearity of the sweep output stage, when operated at its fastest rate, are the rise time of the "constant"-current output pulse, the "bottoming" of the pentodes at the end of the sweep, and the tendency of the circuit to "ring". The rise time appears to be about 1 mμsec, and the "bottoming" becomes serious when the plate voltage falls about 1400 v. The plate supply (1.8 kv) is about maximum for the receiving-type pentode used. This is safely short of the sparking point. No failures have occurred in the unblank or sweep output stages in 6 months operation. The screen voltage (900 v) is the compromise that allows maximum current output, consistent with acceptable bottoming. The stability of the fastest sweep speed is a few per-cent change in 8 hr, and less than 10% in 2 months. The insertion of the usual damping resistors reduced the "ringing" tendency to a suitably small value. Slower sweep speeds are presently obtained by inserting suitably equalized attenuators in series with the coaxial cable from the driver. These consist of series and shunt resistors in a coaxial housing, arranged to give the desired attenuations and a nominal 50 ohms impedance in and out. The shunt resistors have capacitors in series on the ground side for two reasons. The first is to prevent shorting out the bias on the sweep-output grids, and the second to provide a suitable time constant to effectively decrease the attenuation of the unit with time. This compensates to a good extent for the fact that the gate signal from the driver stage is not perfectly flat-topped, but tends to sag with time. This sag is unimportant on fast sweeps (the sag is small percentage-wise over the short duration of a fast sweep, and the sweep output tube is heavily over-driven), but becomes significant with sweeps as slow as 40 psec per spotwidth, or about 2 mμsec/cm. Figure 13 shows the sweep-stage wave forms.

The single-ended sweep-deflection system used works out quite satisfactorily with the K1421 CRT. Because the acceleration potential of the CRT is 10 kv, and

and the useful horizontal sweep voltage is about ± 300 v, the astigmatic effect is quite small.

The construction techniques utilized in order to realize the performance quoted here requires that tube sockets be dispensed with. By clamping the envelope of the tube for firm support, one can make convenient connection to the leads of the tube by means of the usual tube-socket pins, previously removed from the socket. Judicious arrangement of parts will allow removing and replacing the tubes without damaging the circuitry. Figure 14 shows a close-up of such an arrangement. Figure 15 shows the complete unit from the rear, and Fig. 16 shows the unit from the front.

The most critical adjustments involved setting the shunt regulators for the trigger-stage potentials. The best anode and screen voltages are near the maximum available; however, the dynode and suppressor potentials must be adjusted for high output consistent with good rise time and shut-off. There is some tendency for the trigger stage to oscillate near 300 Mc when certain potentials are applied. Although the oscillations occur after the normal sweep and stop after a few hundred mμsec, they are undesirable as they result in too long an effective gate signal, which increases the duty cycle, thus unnecessarily limiting the repetition rate. The present unit works well up to a 10 kc repetition rate. The limitation is imposed by the screen dissipation rating of the sweep-output tubes.

This particular circuit is certainly not the ultimate that is possible, consistent with the limitations of the available TW CRTs. For example, transistor reseachers would probably prefer a factor-of-10 increase in trigger sensitivity. This can conveniently be obtained by inserting a distributed amplifier between the current-amplifier stage and the trigger stage. Such an amplifier is easily within the state of the art,[7] since it need only have a rise-time of about 2 mμsec or less in order to retain most of the present impulse-response speed. The price paid for the factor-of-10 increase in trigger sensitivity would be that the signal delay would have to be approximately doubled, making the delay cable 8 times as bulky. Higher repetition rates and a more refined sweep-speed adjustment can be obtained, if desired, by modification of the output portion of the system.

---

[7]For example: amplifier type 2002, Fleming Radio Ltd., Caxton Way, Stevenage-Herts, England.

ACKNOWLEDGMENT

This work was sponsored by the U. S. Atomic Energy Commission. The work was done as part of the program of the Counter Research Group with Quentin Kerns in charge. The author wishes to acknowledge the many helpful suggestions given by Norman Seaton during the preparation of this paper.

LEGENDS

Fig. 1. Block diagram of the sweep and unblank unit.

Fig. 2. Internal sync take-off. a. Approximate equivalent circuit applicable to the flat top of step response. b. Physical arrangement. c. Test set-up.

Fig. 3. Input-current amplifier stage. For increased sensitivity when reflections are unimportant (such as external sync), short "x" to "y". For negative sync, interchange "y" and "z". The 20 pf capacitor from "z" to ground is to prevent the sync take-off from distributing the dc condition of the signal cable.

Fig. 4. Schematic diagram of trigger stage.

Fig. 5. Triggering delay as a function of signal voltage for input-pulse lengths.

Fig. 6. Triggering delay as a function of signal charge for various input-pulse lengths.

Fig. 7. Schematic diagram of driver stage.

Fig. 8. Time and amplitude relations for the input stages.

Fig. 9. Schematic diagram of unblank stage.

Fig. 10. Schematic diagram of sweep-output stage.

Fig. 11. Sweep-output stage. a. Unblank input. b. Unblank monitor jack termination. c. -10 kv input. d. TW structure input. e. TW structure output. f. Drive input. g. Power input. h. Release nuts for sweep plug-in subchassis. i. V_6 and V_7 sweep-output stage. j. Mounting block clamped to magnet-shield flange.

Fig. 12. Time and amplitude relations for the output stages.

Fig. 13. Drive and sweep relations.

Fig. 14. Main sweep chassis. a. Sync take-off resistor. b. Signal output for 21 mμsec delay to TW deflection system. c. Signal input. d. V1, current amplifier stage. e. V2, trigger stage. f. V3, driver stage. g. V4, driver stage. h. Driver-stage output for 5 mμsec delay to sweep stage. i. Driver-stage grid-line monitor jack (terminated). j. V5, unblank stage. k. Unblank-output plug. l. Regulated filament input. m. Power-input sockets.

Fig. 15. Fractional mμsec oscilloscope unit, rear view. a. TW output to termination. b. Right-hand horizontal deflection-plate output monitor. c. Signal input. d. Signal delay to TW input. e. Equalizer for sweep-drive signal. f. Sweep-delay line. g. Unblank plug. h. Main sweep chassis.

Fig. 16. Fractional mμsec oscilloscope unit, front view. a. Traveling-wave cathode-ray tube. b. Sweep-output stage power-input plug. c. High-voltage power oscillator and control unit. d. +35 kv and -10 kv in-air high-voltage rectifier unit. e. Low-voltage power supplies and sweep-circuit regulators.

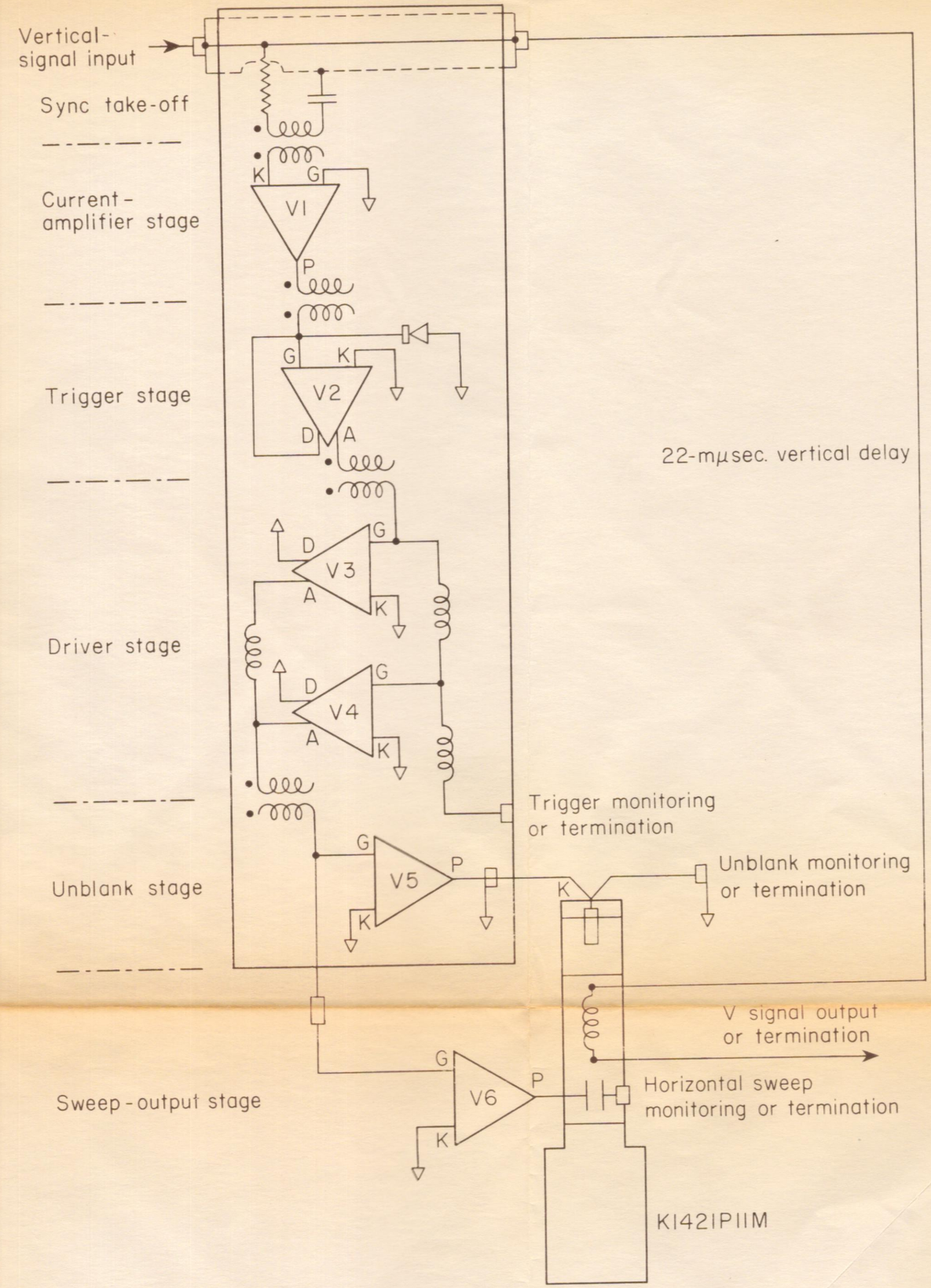
Vertical-signal input
Sync take-off
Current-amplifier stage
V1
K
G
P
Trigger stage
V2
G
K
D
A
22-mμsec. vertical delay
Driver stage
V3
V4
D
G
A
K
Trigger monitoring or termination
Unblank stage
V5
G
P
K
Unblank monitoring or termination
V signal output or termination
Sweep-output stage
V6
Horizontal sweep monitoring or termination
K1421P11M

Fig. 1

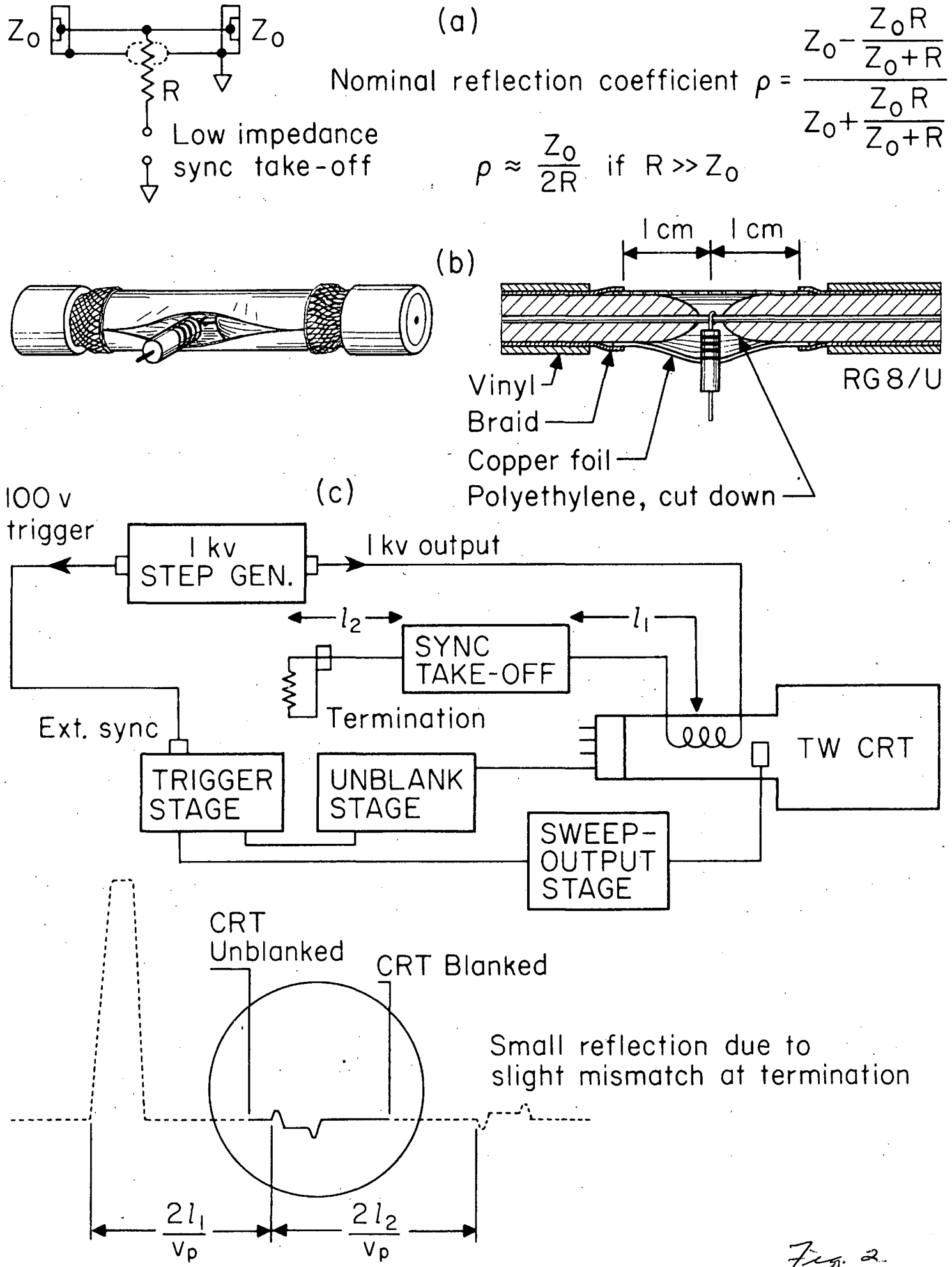
(a)
Z_0
Z_0
R
Low impedance sync take-off
Nominal reflection coefficient $\rho = \dfrac{Z_0 - \dfrac{Z_0 R}{Z_0 + R}}{Z_0 + \dfrac{Z_0 R}{Z_0 + R}}$
$\rho \approx \dfrac{Z_0}{2R}$ if $R \gg Z_0$
(b)
1 cm
1 cm
Vinyl
Braid
Copper foil
Polyethylene, cut down
RG 8/U
(c)
100 v trigger
1 kv STEP GEN.
1 kv output
l_2
l_1
SYNC TAKE-OFF
Termination
Ext. sync
TRIGGER STAGE
UNBLANK STAGE
SWEEP-OUTPUT STAGE
TW CRT
CRT Unblanked
CRT Blanked
Small reflection due to slight mismatch at termination
$\dfrac{2l_1}{v_p}$
$\dfrac{2l_2}{v_p}$

Fig. 2

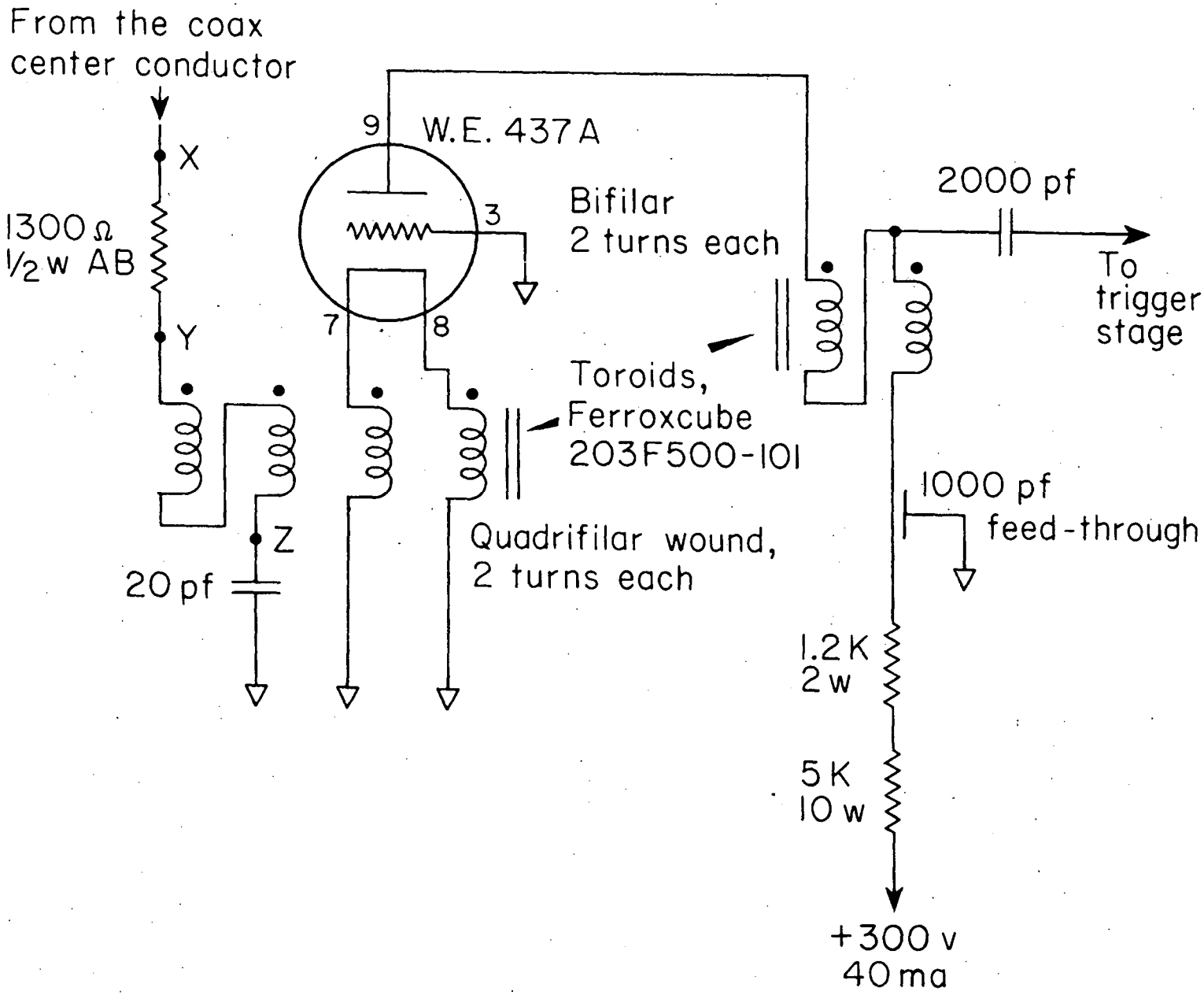
From the coax
center conductor
X
1300 Ω
1/2 w AB
Y
Z
20 pf
9
W.E. 437 A
3
7
8
Bifilar
2 turns each
Toroids,
Ferroxcube
203F500-101
Quadrifilar wound,
2 turns each
2000 pf
To
trigger
stage
1000 pf
feed-through
1.2 K
2 w
5 K
10 w
+300 v
40 ma

Fig. 3.

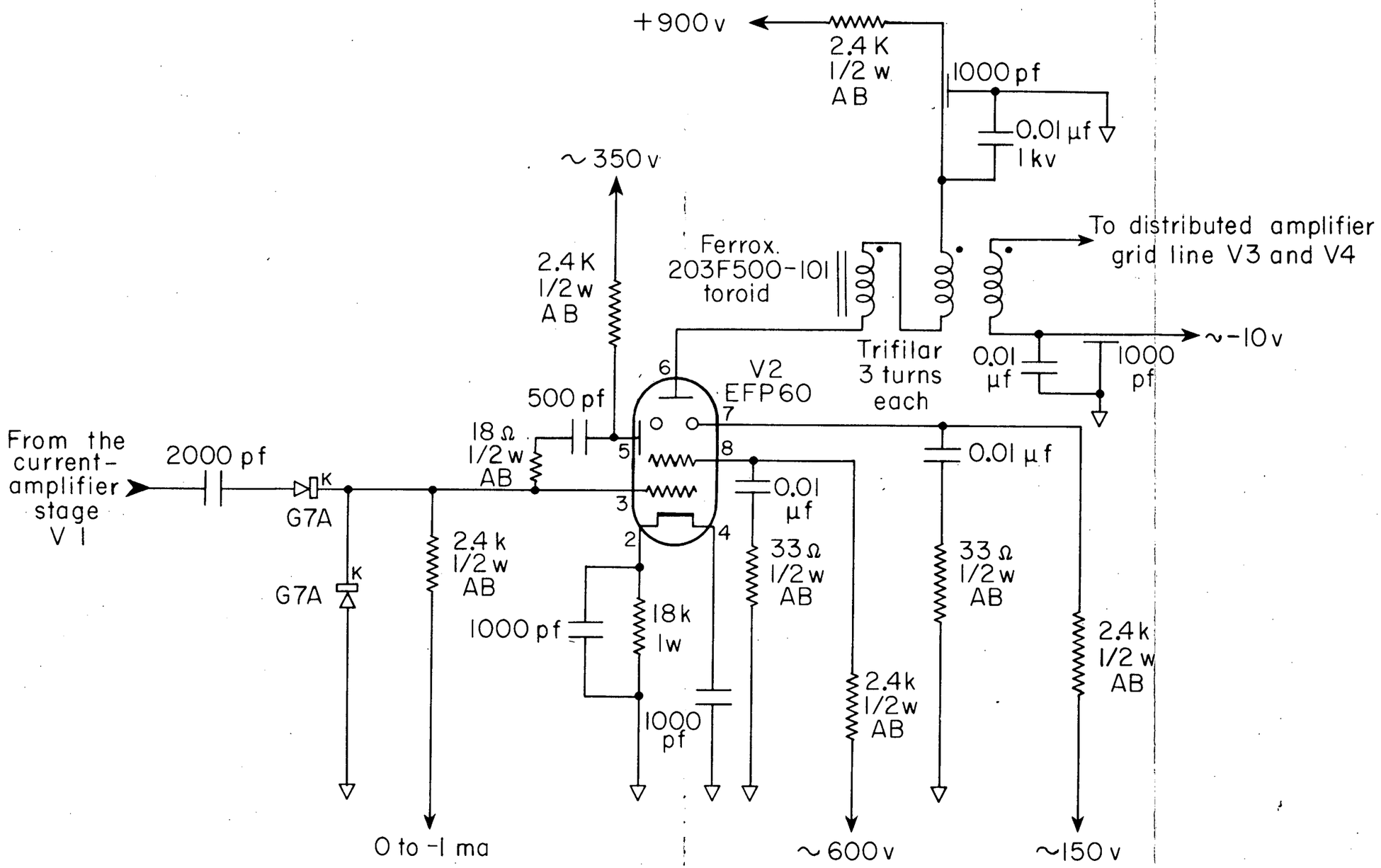
+900 v
2.4 K
1/2 w
AB
1000 pf
0.01 µf
1 kv
~350 v
To distributed amplifier
grid line V3 and V4
2.4 K
1/2 w
AB
Ferrox.
203F500-101
toroid
Trifilar
3 turns
each
0.01
µf
1000
pf
~-10 v
V2
EFP60
500 pf
18 Ω
1/2 w
AB
From the
current-
amplifier
stage
V 1
2000 pf
G7A
K
0.01 µf
0.01
µf
33 Ω
1/2 w
AB
33 Ω
1/2 w
AB
2.4 k
1/2 w
AB
1000 pf
18 k
1 w
1000
pf
2.4 k
1/2 w
AB
2.4 k
1/2 w
AB
0 to -1 ma
~600 v
~150 v

Fig. 4

31225-1

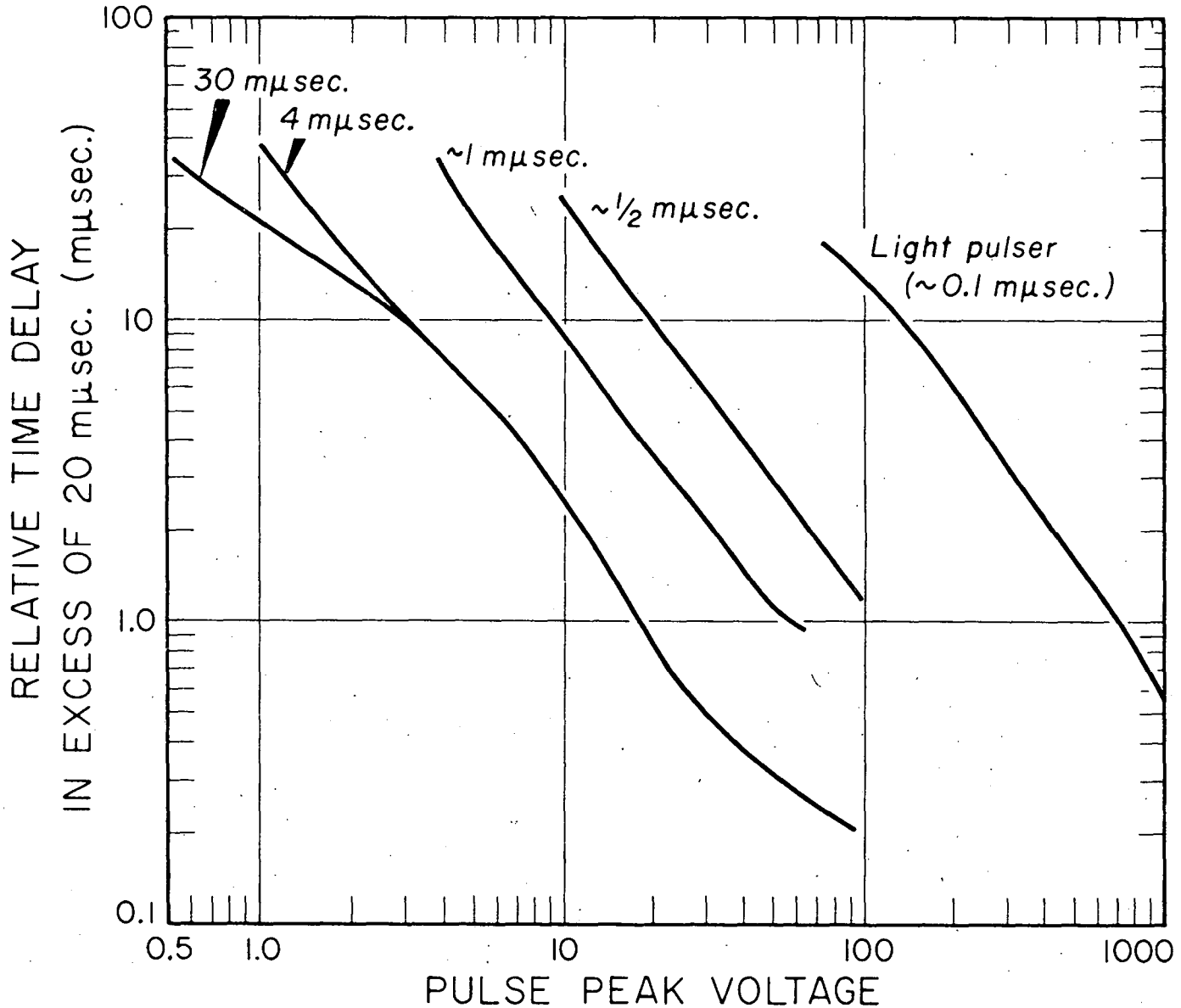
100
10
1.0
0.1
0.5
1.0
10
100
1000
RELATIVE TIME DELAY
IN EXCESS OF 20 mμsec. (mμsec.)
PULSE PEAK VOLTAGE
30 mμsec.
4 mμsec.
~1 mμsec.
~½ mμsec.
Light pulser
(~0.1 mμsec.)

Fig. 5.

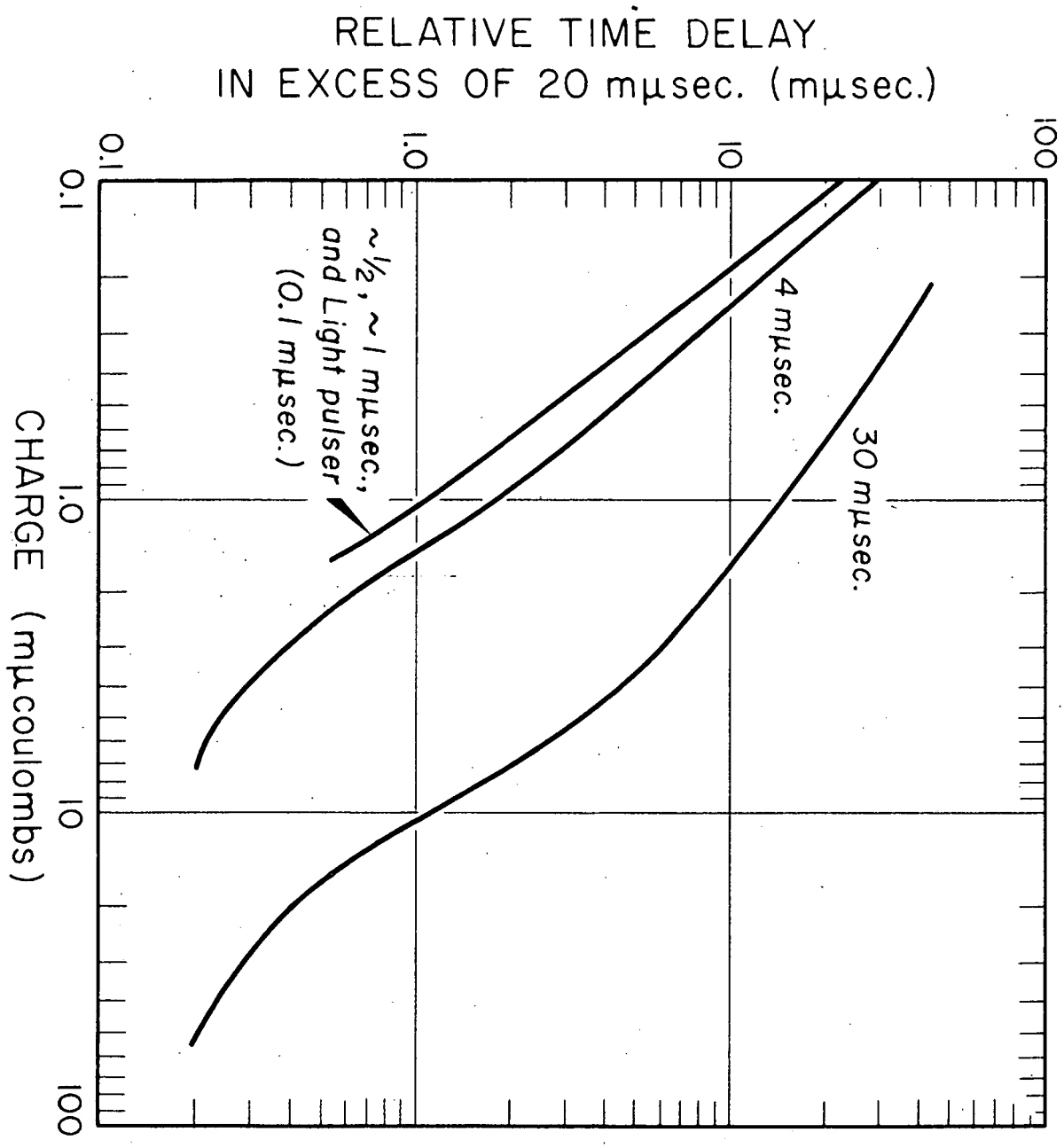
RELATIVE TIME DELAY
IN EXCESS OF 20 mμsec. (mμsec.)
100
10
1.0
0.1
30 mμsec.
4 mμsec.
~½, ~1 mμsec.,
and Light pulser
(0.1 mμsec.)
0.1
1.0
10
100
CHARGE (mμcoulombs)

Fig. 6.

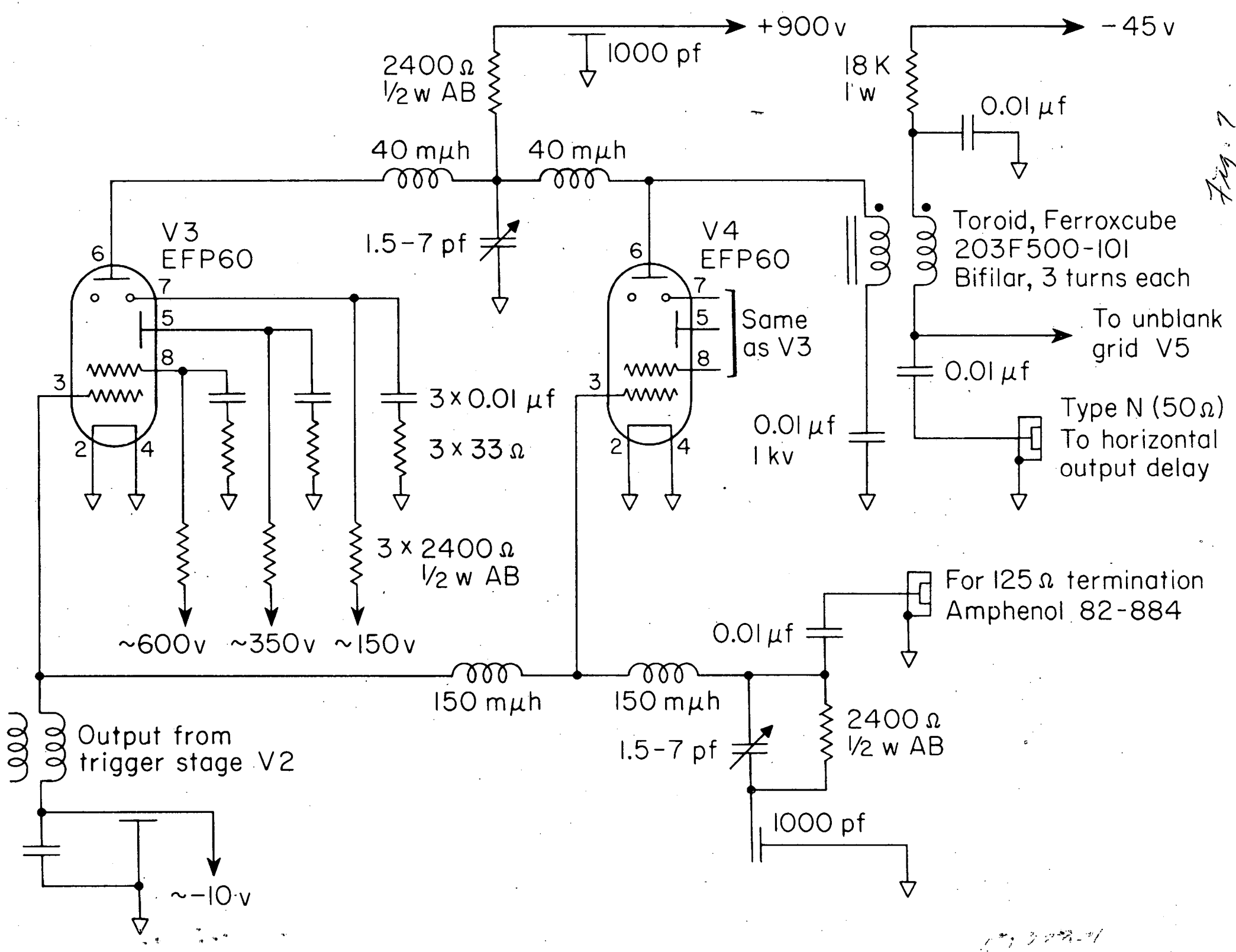
+900 v
1000 pf
2400 Ω
½ w AB
40 mμh
40 mμh
1.5-7 pf
V3
EFP60
V4
EFP60
Same
as V3
3 x 0.01 μf
3 x 33 Ω
3 x 2400 Ω
½ w AB
~600 v
~350 v
~150 v
-45 v
18 K
1 w
0.01 μf
Toroid, Ferroxcube
203F500-101
Bifilar, 3 turns each
To unblank
grid V5
0.01 μf
Type N (50 Ω)
To horizontal
output delay
0.01 μf
1 kv
For 125 Ω termination
Amphenol 82-884
0.01 μf
150 mμh
150 mμh
2400 Ω
½ w AB
1.5-7 pf
1000 pf
Output from
trigger stage V2
~-10 v

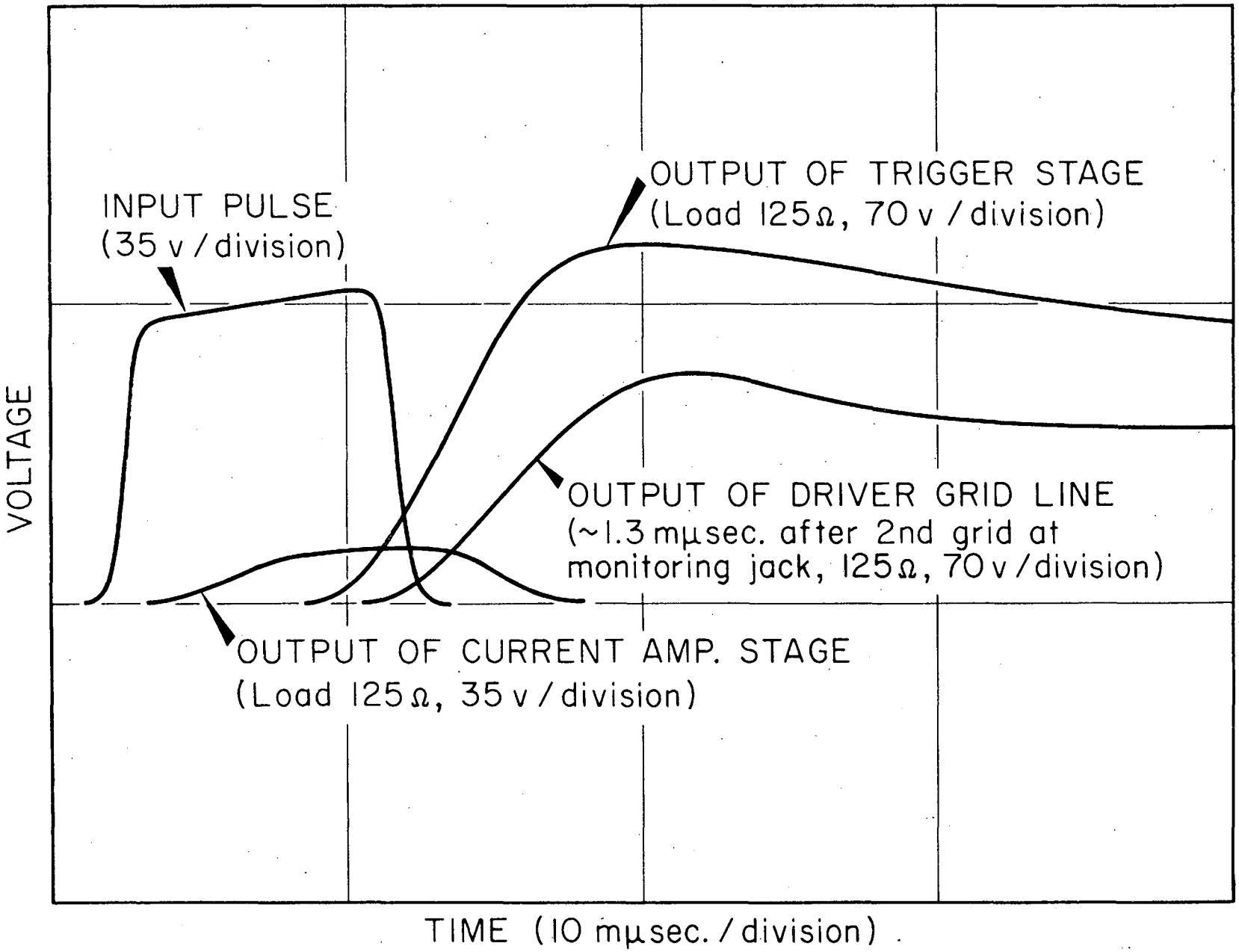
INPUT PULSE
(35 v / division)
OUTPUT OF TRIGGER STAGE
(Load 125 Ω, 70 v / division)
OUTPUT OF DRIVER GRID LINE
(~1.3 mμsec. after 2nd grid at
monitoring jack, 125 Ω, 70 v / division)
OUTPUT OF CURRENT AMP. STAGE
(Load 125 Ω, 35 v / division)
VOLTAGE
TIME (10 mμsec. / division)

Fig. 8

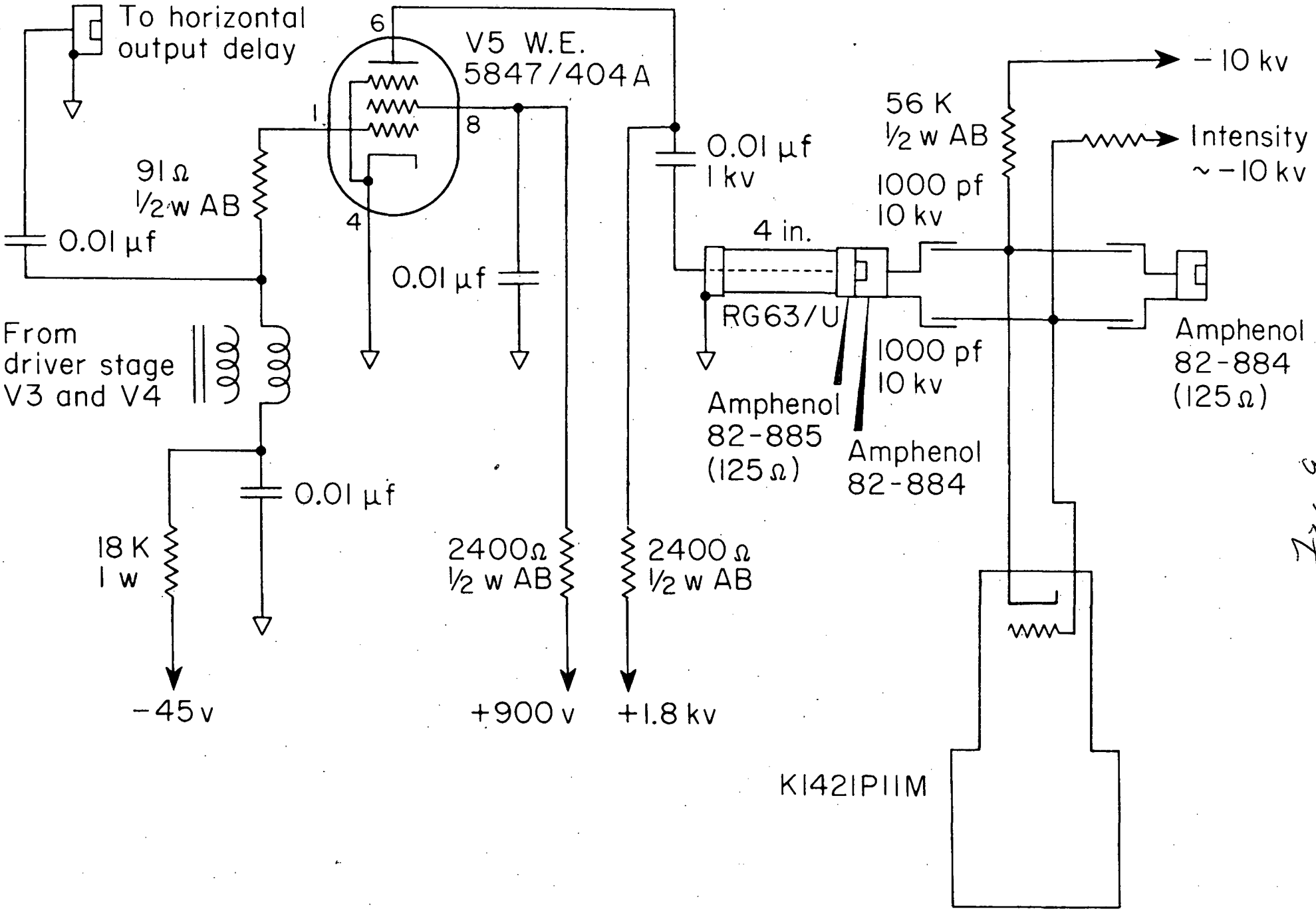
To horizontal output delay
6
V5 W.E.
5847/404A
1
8
4
91 Ω
½ w AB
0.01 μf
0.01 μf
From driver stage V3 and V4
0.01 μf
18 K
1 w
−45 v
2400 Ω
½ w AB
+900 v
0.01 μf
1 kv
2400 Ω
½ w AB
+1.8 kv
4 in.
RG63/U
Amphenol 82-885 (125 Ω)
1000 pf
10 kv
Amphenol 82-884
56 K
½ w AB
1000 pf
10 kv
−10 kv
Intensity ~ −10 kv
Amphenol 82-884 (125 Ω)
K1421P11M

Fig. 9.

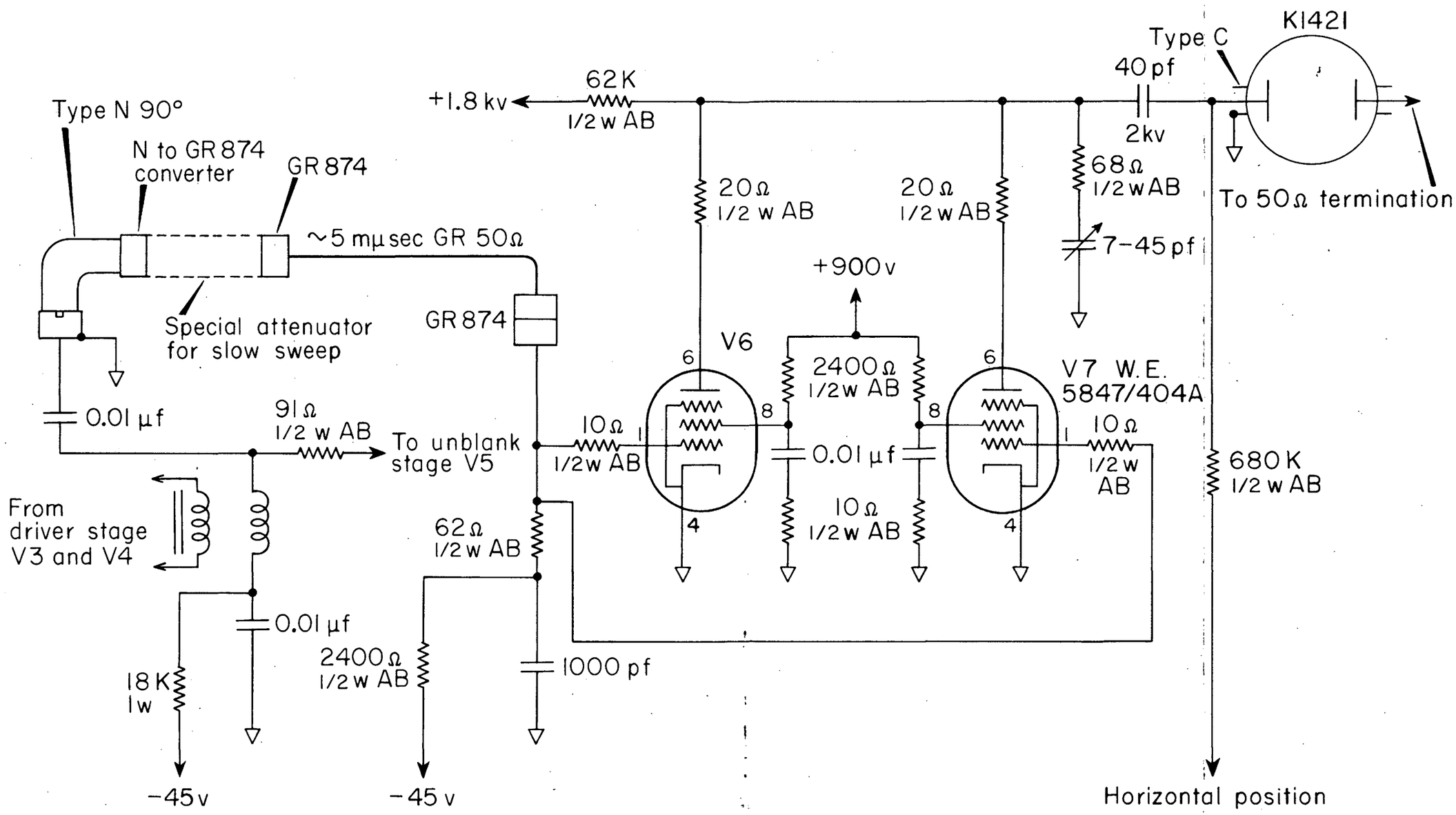
Type N 90°
N to GR 874 converter
GR 874
~5 mμsec GR 50Ω
Special attenuator for slow sweep
GR 874
0.01 μf
91Ω 1/2 w AB
To unblank stage V5
From driver stage V3 and V4
0.01 μf
18 K 1w
-45v
+1.8 kv
62K 1/2 w AB
20Ω 1/2 w AB
20Ω 1/2 w AB
+900v
V6
6
8
4
1
10Ω 1/2w AB
62Ω 1/2 w AB
2400Ω 1/2 w AB
1000 pf
-45 v
2400Ω 1/2w AB
0.01 μf
10Ω 1/2 w AB
V7 W.E. 5847/404A
6
8
4
1
10Ω 1/2 w AB
40 pf
2kv
68Ω 1/2 w AB
7-45 pf
Type C
K1421
To 50Ω termination
680 K 1/2 w AB
Horizontal position

Fig. 10

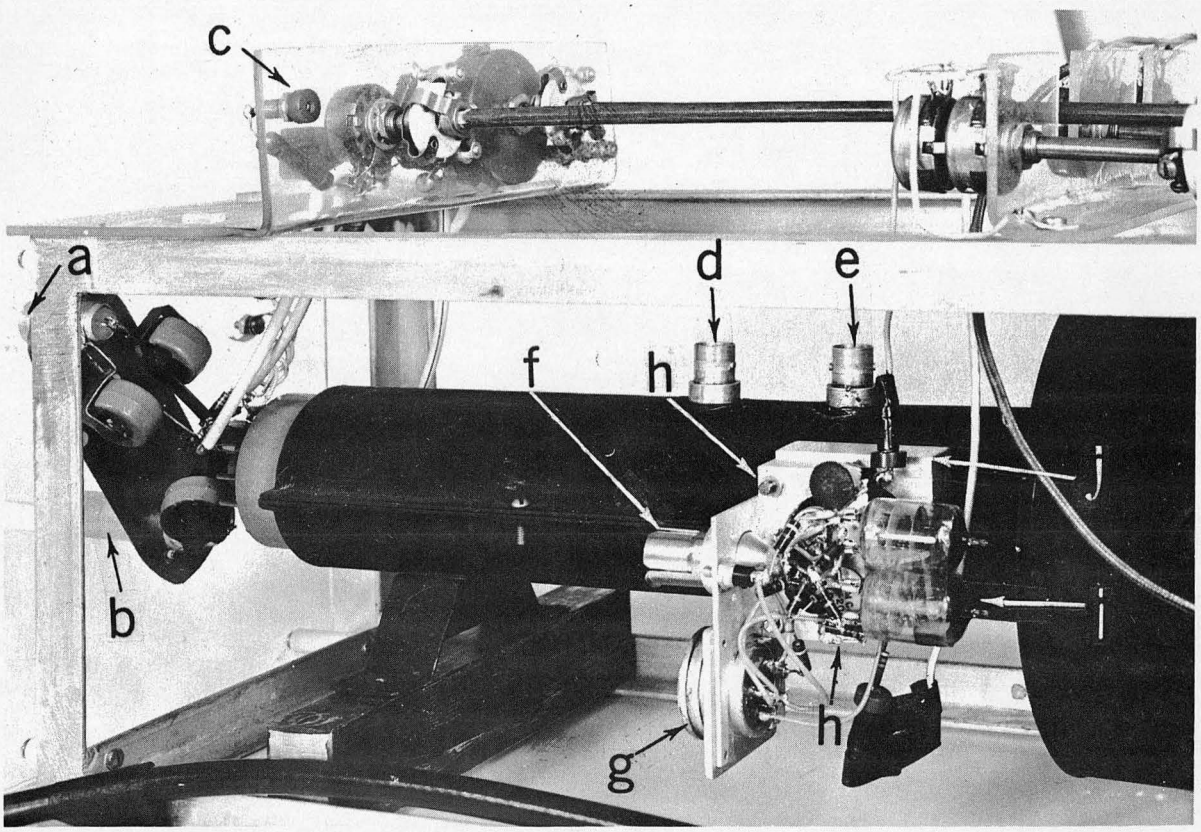

ZN-1775

Fig. 11.

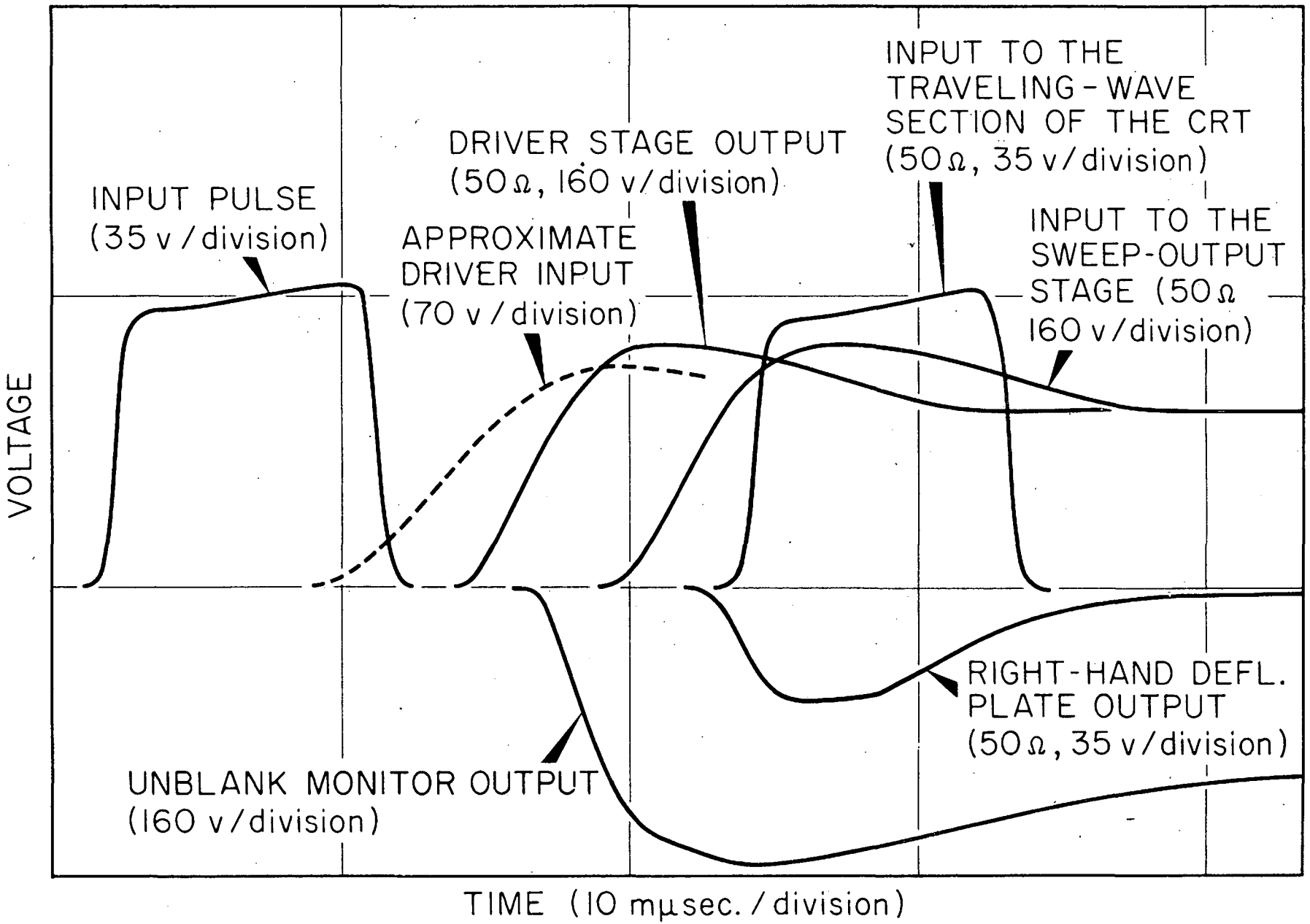
INPUT PULSE
(35 v / division)
APPROXIMATE
DRIVER INPUT
(70 v / division)
DRIVER STAGE OUTPUT
(50 Ω, 160 v / division)
INPUT TO THE
TRAVELING - WAVE
SECTION OF THE CRT
(50 Ω, 35 v / division)
INPUT TO THE
SWEEP-OUTPUT
STAGE (50 Ω
160 v / division)
RIGHT-HAND DEFL.
PLATE OUTPUT
(50 Ω, 35 v / division)
UNBLANK MONITOR OUTPUT
(160 v / division)
VOLTAGE
TIME (10 mμsec. / division)

Fig. 12.

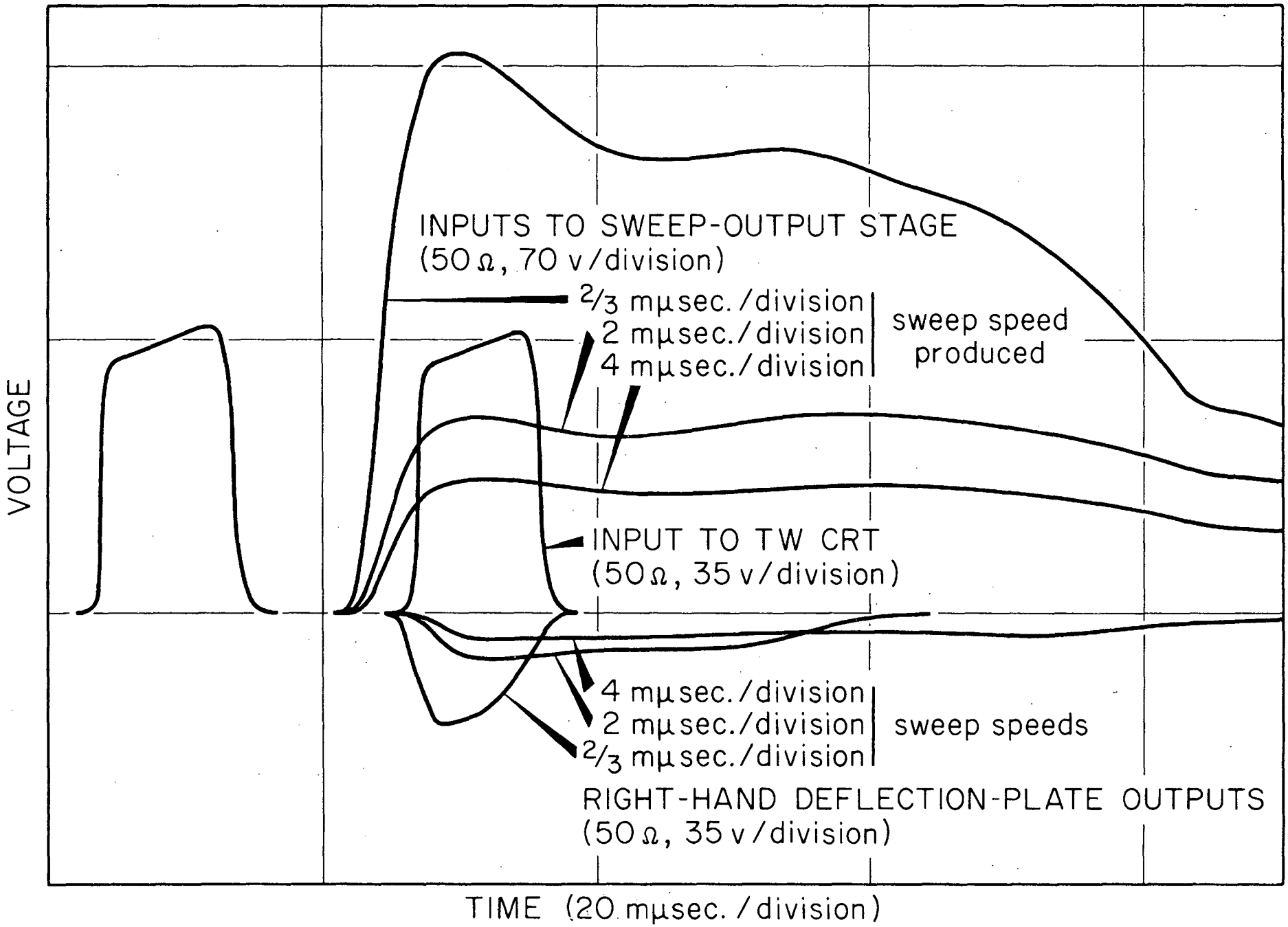
INPUTS TO SWEEP-OUTPUT STAGE
(50 Ω, 70 v/division)
2/3 mμsec./division
2 mμsec./division
4 mμsec./division
sweep speed produced
INPUT TO TW CRT
(50 Ω, 35 v/division)
4 mμsec./division
2 mμsec./division
2/3 mμsec./division
sweep speeds
RIGHT-HAND DEFLECTION-PLATE OUTPUTS
(50 Ω, 35 v/division)
VOLTAGE
TIME (20 mμsec./division)

Fig. 13

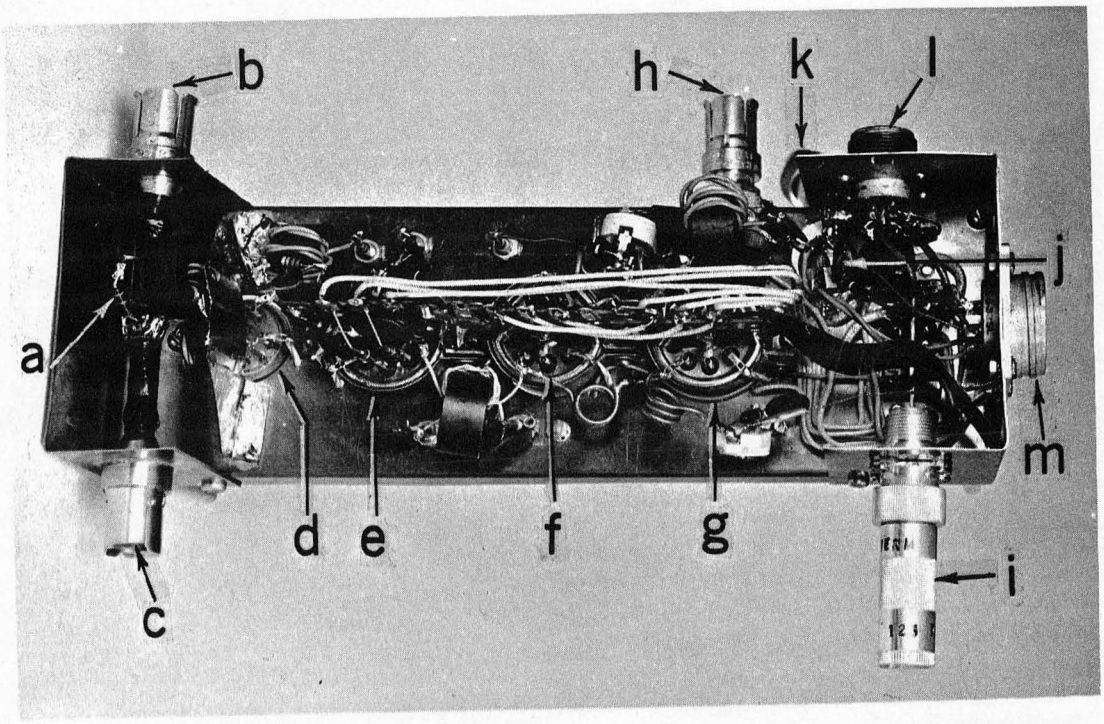

ZN-1776

Fig. 14

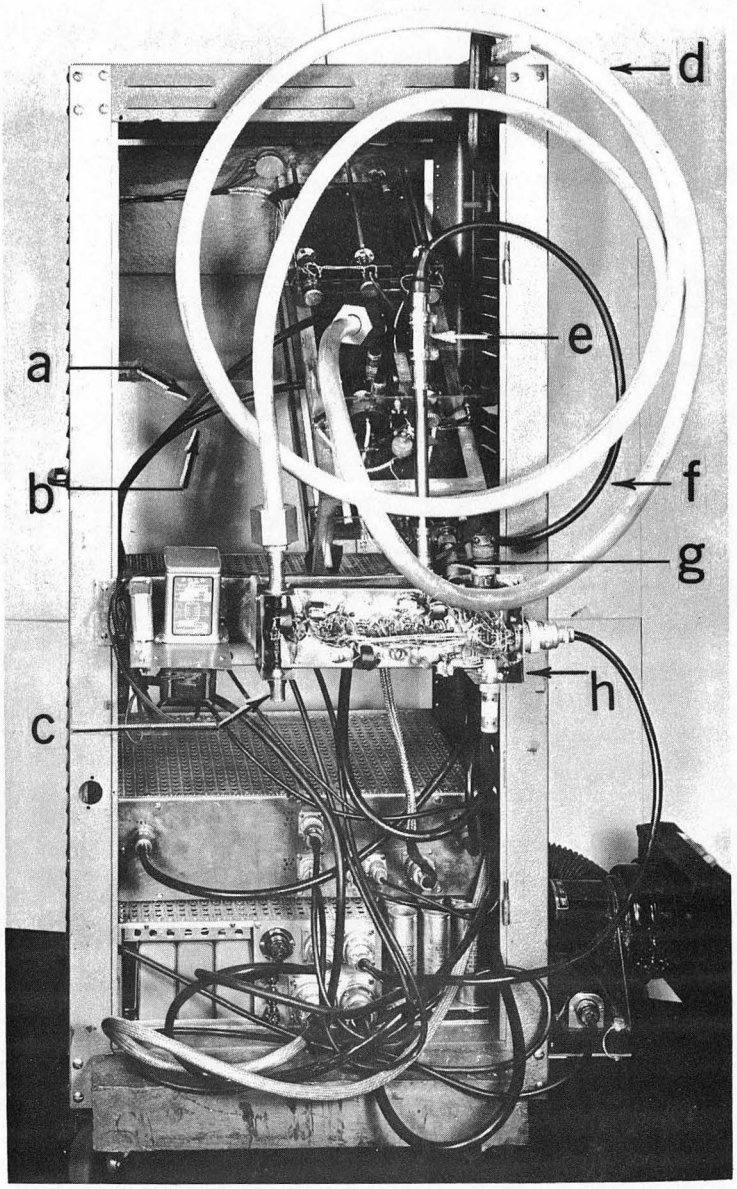

ZN-1773

Fig. 15

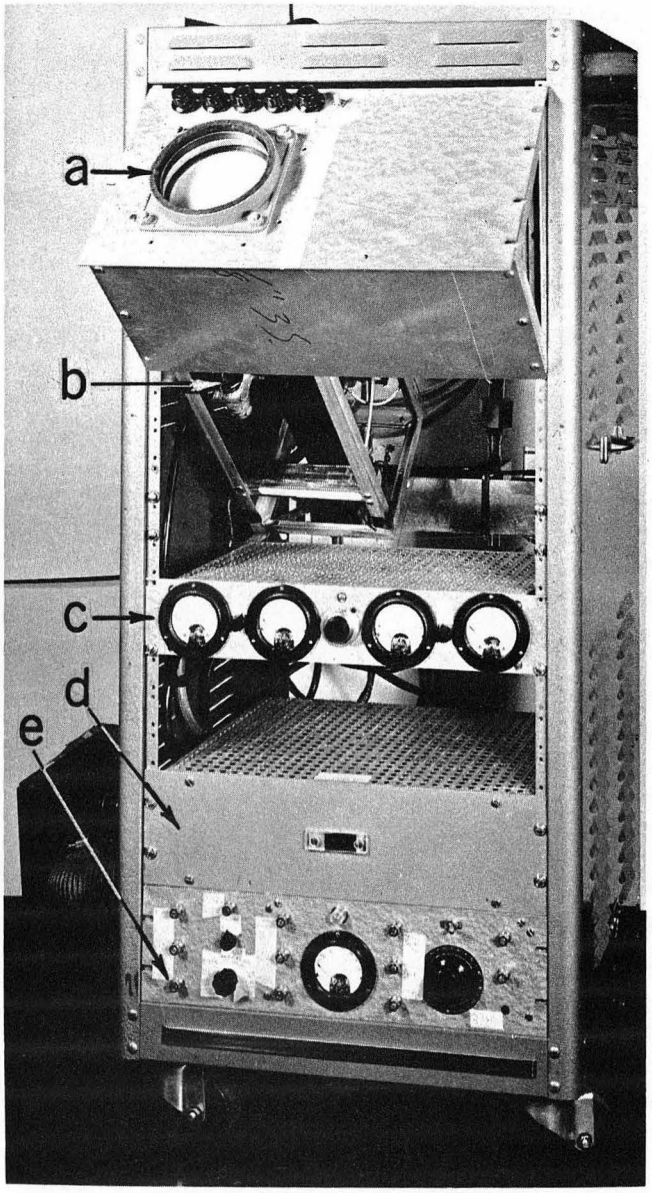

ZN-1774

Fig. 16