UCRL 3779
c.2

UNIVERSITY OF CALIFORNIA

Radiation Laboratory

TWO-WEEK LOAN COPY

This is a Library Circulating Copy which may be borrowed for two weeks. For a personal retention copy, call Tech. Info. Division, Ext. 5545

BERKELEY, CALIFORNIA

UCRL-3779
c.2

DISCLAIMER

This document was prepared as an account of work sponsored by the United States Government. While this document is believed to contain correct information, neither the United States Government nor any agency thereof, nor the Regents of the University of California, nor any of their employees, makes any warranty, express or implied, or assumes any legal responsibility for the accuracy, completeness, or usefulness of any information, apparatus, product, or process disclosed, or represents that its use would not infringe privately owned rights. Reference herein to any specific commercial product, process, or service by its trade name, trademark, manufacturer, or otherwise, does not necessarily constitute or imply its endorsement, recommendation, or favoring by the United States Government or any agency thereof, or the Regents of the University of California. The views and opinions of authors expressed herein do not necessarily state or reflect those of the United States Government or any agency thereof or the Regents of the University of California.

UCRL-3779
8-21-57

THE ELECTRICAL ASPECTS OF THE UCRL 740-MEV SYNCHROCYCLOTRON *

B. H. Smith, K. R. MacKenzie, J. Reidel, Q. Kerns,
W. R. Baker, C. W. Park, and R. L. Thornton

Radiation Laboratory
University of California
Berkeley, California

Abstract

The 184-inch, 350-Mev cyclotron has been converted to 740 Mev in order to provide a source of particles in a relatively unexplored energy range. The particle and corresponding energy attainable are

Proton	740 Mev
Deuteron	460 Mev
He^3	1140 Mev
Alpha	915 Mev.

The energy was increased by increasing the magnetic field of the 184-inch magnet from 15 to 23.5 kgauss. A new rf system was built with a correspondingly higher starting frequency and a wider frequency sweep to accommodate the higher relativistic change in mass of the accelerated particles. This requires a large ratio of maximum-to-minimum capacitance in the frequency-modulating capacitor. The minimizing of this ratio through the use of sections of nonuniform characteristic impedance within the resonator is discussed along with the design, excitation, and control problems associated with the unique vibrating capacitors that were used.

Because of the short wavelengths associated with the rf, the vacuum tank is able to support the first higher-order cavity mode within the proton range. Electric field components associated with this mode, if excited, would prevent the beam from reaching full energy. There are similar problems associated with the dee cross-modes. These problems and their solutions are discussed in the paper.

Introduction

In September 1955 conversion of the 184-inch cyclotron in Berkeley to obtain a 740-Mev proton beam was started after 6 years of operation at 350 Mev. To achieve this goal the magnetic field had to be increased from 15,000 to 23,400 gauss. This increased the proton starting frequency from 23 to 36 Mc., and the relativistic change in mass (74.4% instead of 37.4%) required that the frequency sweep down to 19 Mc. instead of 14 Mc. Corresponding modifications were necessary for deuterons, alpha particles, and helium-3 ions. These changes, inherent in the conversion to higher energy, present many new problems.

At 23,400 gauss the permeability of the steel drops to about 12, whereas at 15,000 gauss it had been 700. Still, one must realize that in the 350-Mev machine most of the magnetic reluctance was in the magnet gap. This gap was reduced from 19 to 12 in. and the number of ampere turns had to be increased by only 61% to produce the new value of magnetic field intensity. An auxiliary set of magnet coils were added in the vacuum tank space made available by the lengthened magnet poles (Fig. 1).

Saturation of the steel increased the fringing field around the magnet. At the same time, the shorter wavelengths associated with the higher rf frequency necessitated placing the frequency-sweeping capacitor nearer the leading edge of the dee and in a magnetic field of 400 gauss instead of almost zero as before. Initial calculations indicated that a conventional rotating capacitor would be subjected to very high eddy currents; the losses would be about 83 kw. and indeed present a difficult cooling problem. To avoid this and the rf-mode problems associated with concentration of rf currents on the blades of a very large rotating capacitor, we developed a set of vibrating capacitors. This reduced the motion necessary to produce a given capacitance change and made it possible to further reduce the eddy-current heating by aligning the motion with the magnetic field lines. The dissipation now is less than 50 watts.

The shorter wavelength reduced the length of the resonator, but the width has to be sufficient

* This work was done under the auspices of the U. S. Atomic Energy Commission.

to contain the final orbit of the accelerated particles. As a result, the resonant wavelengths associated with the lateral dimensions of the resonator are comparable with those of the longitudinal dimensions. Fortunately, these cross-modes move with sweep frequency, and it was po possible to displace them several megacycles from the desired longitudinal mode by an appropriate choice of resonator geometry.

The only remaining rf mode that proved to be troublesome is the TE_{101} mode of the vacuum tank. This mode occurs at 25 Mc. and corresponds to a radius of 63 in. for protons. It did not yield to our attempts to move it to either end of the range, but by preserving the vertical symmetry of the resonator and providing a vertical-trimming adjustment, we are able to decouple it from the oscillator. Thus, though the desired mode of excitation of the dee lies in the midst of a number of undesirable modes in the frequency spectrum, the latter are not excited by the oscillator.

The arc source is of the open-arc type using a tungsten filament. It was not modified during the conversion.

A new deflector of the magnetic regenerative type[1, 2, 3] was installed in the machine. It extracts a much larger fraction of the internal beam than the electric deflector did in the preconverted machine and, in addition, is an essentially maintenance-free device. Further description of the deflector does not fall within the scope of this paper.

The Resonator

The three-quarter-wave type resonator was selected for the new machine.[4, 5] Because the required frequency sweep is large--from 36 to 19 Mc.--is is necessary to reduce the required range of the frequency sweeping capacitor to a minimum. This was accomplished by varying the characteristic impedance of the resonator along its length. Intuitively, one can see that if the characteristic impedance of the resonator is reduced near the voltage node at the high frequency end of the range, the resonant frequency here will be altered only slightly, but as the resonator is tuned to a lower frequency and the node shifts away from the low impedance section, more electric field energy is stored in the section and less is required in the sweeping capacitor. Hence, a smaller ratio of maximum-to-minimum capacitance is required.

Component values for a large number of resonators were computed using the above concept as a guide. A special calculator that is particularly well suited to this type of problem was employed,[6] and only a few days were required to run off calculations on over 65 possible cases. A capacitance ratio of 20:1 is all that is required to sweep the resonator through the desired range.

The sweeping capacitor consists of two sets of reeds, which vibrate with an amplitude of 0.5 in., and the corresponding stator plates. The maximum capacitance is about 6450 μμf, and the minimum is about 310 μμf.

Much of the research planned for the cyclotron requires acceleration of deuterons and alpha particles and possibly some work with He^3 ions. The first two particles require the same frequency sweep--from 18 to 13.7 Mc--while the latter requires a sweep from 24 to 16 Mc.

The part of the resonator that seems to lend itself best to adjustment to accommodate these lower frequencies is the quarter-wave section located most remotely from the dee edge. This section is outside the magnet poles, where space is available for an actuating mechanism, and also has the highest rf current densities, which makes a change in volume particularly effective in shifting the resonant frequency. A pair of movable panels were employed to change the characteristic impedance of this section from 4.14 ohms for the proton range to 16.2 ohms for the deuteron range. The panels are shown in the proton position in Fig. 2.

With the panels moved into the deuteron position the resonator sweeps from 25 to 13.6 Mc. Because the starting frequency for deuterons is 18 Mc., the acceleration time would be very short (2.5 msec), and the threshold dee voltage too high. Some temporary capacitors were shunted from the reed motors to the stators, which restricted the upper frequency limit and lengthened the acceleration period to 3.8 msec. This reduced the threshold voltage sufficiently to permit acceleration of deuterons to full energy and their extraction by the deflector.

At present, the permanent model of this capacitor and the external actuating mechanism that permits its connection for the deuteron range are being built.

The equivalent circuit of the resonator is shown in Fig. 2, and the computed values of voltage and current in Fig. 3. An rf power inventory was made using the currents shown in Fig. 3. and it revealed that 70 kw. of rf power is required to produce a dee voltage of 20 kv.

The dee is 126-in. long and 180-in. wide and is therefore capable of supporting lateral resonant modes of comparable frequency to the desired longitudinal mode. Figure 4 shows the resonator in perspective and the equivalent circuit for each direction. It is apparent from the equivalent circuit associated with the y direction that the transmission line will be foreshortened for frequencies below the series resonance of the vibrating capacitance and reed inductance and lengthened above this resonance. Hence, there are two cross-modes near the desired mode. The amount of lengthening or foreshortening of these modes depends upon the

lateral spacing of the reeds. Figure 5 shows the separation of the cross-modes from the desired mode in both the proton and deuteron ranges.

Another mode that has to be considered is the TE_{101} mode of the vacuum tank, which occurs at 25 Mc. Current associated with this mode flows from the center of the top of the vacuum tank radially outward to the sides and down to the center of the bottom of the tank. The corresponding electric field is vertical and synchronous with the accelerated protons; it acts upon the protons for an entire half revolution each rf cycle rather than for just a few degrees like the accelerating field at the dee edge. Consequently, it can drive the beam vertically into the magnet pole but is not excited if the resonator is vertically symmetrical. The imperfections resulting from mechanical tolerances and thermal gradients can be compensated for by individual adjustment of the movable panels.

Drive Loops and Transmission Lines

A method of coupling the oscillator to the resonator had to be found which would discriminate between the fundamental mode and the cross modes. If one considers the direction of current flow on the reeds, it is apparent that the currents associated with the fundamental mode are in the same direction on the two reeds whereas the currents for the cross-modes are in opposite directions. Thus, if the anode drive loop is coupled to the currents of one reed while the cathode drive loop is coupled to the currents of the other the voltages will be in phase for the fundamental mode, but out of phase for the cross modes. If this phase information can be preserved through the transmission lines, the system will be regenerative for the fundamental mode but degenerative for the cross-modes. Because the standing-wave ratio is very high on the transmission lines, the phase shift along the lines is either almost zero or almost 180 deg. except over a very short length of the line near the voltage node. (This region, having a very low impedance, is not a suitable place to connect tube elements anyway.) Therefore preservation of phase is easily achieved.

In order to suppress oscillation on the cross modes the two transmission lines were made electrically identical. The anode line is terminated in the anode capacitance; the cathode line was made identical and terminated in an equivalent capacitive voltage divider which also provides the proper drive to the oscillator tube.

Two other requirements had to be fulfilled: (1) the transmission-line resonances had to be displaced to either side of the operating-frequency range, (2) the transmission lines had to produce the proper voltage vs frequency curve so that the dee voltage would be approximately constant throughout the frequency sweep. To meet these requirements the length and characteristic impedance of the transmission lines could be varied. The geometry did not lend itself well to calculation so these conditions were worked out by rf-modeling techniques using calculations on an idealized line as a guide. Absorption-type mode suppressors were used to prevent oscillation on the transmission-line resonances.

Oscillator

One of the practical advantages of synchrocyclotrons is that they do not present as severe a sparking problem to the oscillator circuitry as do other types of accelerators. This is a result of the low dee voltage at which they operate and, hence, the relatively small amount of energy they store in the resonator. Still, the resonator discharges do occasionally induce an external spark, so we employed the spark resisting techniques that we have found so effective on our other machines. High-speed over-current signals are obtained from grid and anode circuits for crowbar excitation. (See Fig. 6.) Spark gaps are connected across all rf bypass capacitors. Capacitors that operate at high rf gradients are of the air-dielectric type.

A Machlette 5681 triode is employed in a coaxial grounded-grid oscillator circuit (Fig. 6.) Construction details are shown in Fig. 7. The oscillator box is surrounded on three sides by four 0.5-in. steel plates which reduce the magnetic field from 2 kgauss to 40 gauss. The weight of the oscillator tube is supported at the anode by a conical section of polyethylene which also serves as an air baffle to direct the cooling air over the glass seals. The anode cooling water (25 gal per min) is transported by means of two 1-inch-diam neoprene fire hoses 18 in. long. With 10 μmho water, the dc leakage current is 13 ma for a dc anode voltage of 15 kv. The hose fittings are equipped with antielectrolysis electrodes.

The Pulse-Control System

The block diagram of the oscillator and arc-pulse system is shown in Fig. 8. The timing sequence starts from the reed-position marker pulse which is derived from a blocking oscillator triggered by the reed-amplitude signal. Univibrators are used to delay the starting time and to determine the length of the oscillator pulse. This pulse, after amplification, modulates the oscillator.

The arc-pulse univibrator is triggered from the rf by a superhetrodyne receiver tuned to the ion-starting frequency. This pulse is amplified and provides an arc-source anode voltage.

The crowbar, which provides high-speed protection against sparking-induced power arcs within the oscillator tube, short circuits the screen of the final amplifier tubes in the oscillator pulse amplifier. The protective equipment is of fail-safe design and, in addition, is backed up by overcurrent relays. Following a crowbar operation, a recycler brings the cyclotron back into operation automatically after a 2-sec time delay which

permits the vacuum pump to remove the products of the discharge before rf is reestablished.

The Mechanical Construction of the Reeds

The reeds are 36 in. long and 45 in. wide. They are bolted rigidly together at the root so that they will vibrate like a tuning fork resonant at 63.8 cps. The mechanical Q of the blades varies with the amplitude and has a value of 7,000 at the full amplitude (0.5 in.) and 2,000 at twice amplitude. The blades are made of Nitraloy-135-modified steel[7,8] which has had the surface nitrided to prevent fatigue failure. The maximum stress is 13,000 psi, which is well below the endurance limit (90,000 psi) of the steel. All rf-carrying surfaces are copper plated in order to reduce the skin losses. Heat transfer from the reeds is accomplished by thermal radiation and conduction to the water-cooled mounting blocks attached to the blade root. The cooling is adequate for rf current densities up to 40 amp per inch (which corresponds to 20-kv dee voltage) at 36 Mc. with a 50% duty factor.

The reed motor consists of a laminated steel core which is excited by a coil of square conductor measuring 260 mils on an edge and having a 1/8 in. center hole for cooling water. Magnetic flux from the motor links the steel blades and thus produces the driving force.

During development of the reeds a problem appeared with a mechanical cross-mode. Because the width of the reed is comparable with its length, the resonant frequency of the first cross-mode is comparable with that of the longitudinal mode. The resonant frequency of each mode varies with the blade temperature. If the curves of these quantities intersect within the operating-temperature range, the cross-mode will be excited. This condition existed in the initial design. We found that cutting seven uniformly spaced longitudinal slots in the blade near the tip increased the compliance in the lateral direction without appreciably affecting it in the longitudinal direction. This lowers the resonant frequency of the cross-mode so that its curve no longer intersects that of the fundamental mode. (Fig. 9.) Thus the motor excites only the desired mode.

Facilities were not available to build one set of reeds wide enough to provide sufficient capacitance to meet the requirements of the resonator, so two smaller sets of reeds were used. It is necessary that their resonant frequencies be almost identical--the difference must not exceed 0.005 cps if the phase error between the reed pairs is not to exceed 1 deg. Initial operation indicated that the external beam is quite sensitive to this phase error, and so an automatic phase control system was developed.

Balancing the Reeds

Each set of reeds had to be balanced so that the mounting would be at a velocity node and the amount of vibration coupled to the vacuum tank would be a minimum. The reeds were installed in a small test tank for balancing, in order to have quick access to the blade tips. A vibration pick-up was mounted on the tank and weights were attached to the upper or lower blade as needed to minimize the vibration. After balancing each set of reeds in this way, additional weights were added symmetrically to the set of reeds with the higher resonant frequency so that its frequency would match that of the other set. Finally, the difference in resonant frequencies turned out to be about 0.001 cps. The reeds were then installed in the cyclotron.

Excitation of the Reed Motors

The reeds are excited by the superposition of a dc and an ac current. (Fig. 10.) The dc current produces a magnetic spring which is used to trim the resonant frequency of the reeds. Changing this current from 20 to 100 amp changes the resonant frequency of the reed by about 0.050 cps which is sufficient to compensate for thermal differences between the reeds.

The reeds are designated "Reed 1" and "Reed 2" as a result of their location in the cyclotron. As the reeds are heated by the rf, Reed 1 happens to require progressively more dc than Reed 2. We chose to self-excite Reed 2 and to drive Reed 1 with the signal thus generated. The dc in Reed 1 is varied to keep it in tune with Reed 2. It is preferable that the dc in the self-excited reed not be varied because some saturation of the motor core occurs at the higher dc values. This shifts the phase of the feedback voltage and drives the oscillator off of the resonant frequency of the reed.

A block diagram of the reed control system is shown in Fig. 10. Each reed has its own amplitude regulator. A signal proportional to the amplitude is obtained by a magnetic pickup and is compared to a reference voltage; the difference is amplified and controls the gain of the reed-driving amplifier. The amplitude control simply adjusts the reference voltage. The accuracy of amplitude regulation was measured by observation of the variation in lower limit of the rf frequency sweep. This indicated that the amplitude stability is about 0.002 in.

The phase angle between the two reeds is measured by means of a phase detector. The output of this unit is amplified and actuates the dc applied to Reed 1 by means of a saturable reactor. The stability in phase angle is about 1 deg.

Under steady-state conditions, each reed set requires only 70 w of driving power, but a larger amount of power needs to be available to make them respond quickly because of their high mechanical Q. The 500-watt amplifiers bring the

reeds to full amplitude in 8 sec.

The Magnet Regulators

Each set of magnet coils has its own current regulator which operates with a loop gain of 10,000 and employs both a current and voltage feedback loop. The reference voltage is obtained from thermally insulated temperature-regulated mercury cells, and 0.500-v water-cooled manganin shunts are used. The stability of the magnetic field exceeds 1 part in 10,000.

Acknowledgment

The authors wish to express their gratitude to J. Vale and the cyclotron crew for their contributions to the design and construction of many of the electrical components of the machine; to I. Lutz, E. Skiff, and M. Leavitt for the development of the magnet regulators; and to R. Burleigh for much of the mechanical design of the rf equipment.

Bibliography

1. J. L. Tuck and L. C. Teng, "Regenerative Deflector for Synchrocyclotron", Phys. Rev. 81, 305 (1951).
2. K. J. Le Couteur, "The Regenerative Deflector for Synchrocyclotrons", Proc. Phys. Soc. (London) 64, 1073 to 1084 (1951).
3. A. V. Crew and K. J. Le Couteur, "Extracted Proton Beam of the Liverpool 156-inch Cyclotron", Rev. Sci. Instr. 26, 625 (1955).
4. K. R. MacKenzie, "Proton Deuteron R-F System for Berkeley Synchrocyclotron, Rev. Sci. Instr. 22, 302 to 309 (1951).
5. K. R. MacKenzie, F. H. Schmidt, J. R. Woodyard, and L. F. Wouters, "Design of the Radio-Frequency System for the 184-Inch Cyclotron", Rev. Sci. Instr. 20, 126 to 133 (1949).
6. K. R. MacKenzie, "Calculator for Some R-F Problems in Accelerator Design", Rev. Sci. Instr. 27, 580 to 583 (1956).
7. David Landau, "Fatigue of metals; some facts for the designing engineer", Ed. 2 (Nitralloy Corporation, New York, 1942), pp. 29 to 34.
8. J. B. Johnson and T. T. Oberg, "Effect of notches on nitrided steel", Metals and Alloys, pp. 129 to 130 (1934).

Appendix

Electrical Characteristics of UCRL 740-Mev Cyclotron

Magnetic field at center	23.4 kg
Magnetic field at final radius	22.3 kg
Magnetomotive force	
Total	3.03×10^6
Main coils	1.88×10^6
Auxiliary coils	1.15×10^6
Magnet power	2.38 Mw
Pole diameter	188.75 in.
Magnet gap	12 in.
Radius of final orbit	82 in.
Maximum dee voltage	20 kv
Operating dee voltage	10 to 15 kv
Peak rf power required for maximum dee voltage	70 kw
Repetition rate (modulation frequency)	63.8 cps
Proton frequency at center	36 Mc
Proton frequency at final radius	19 Mc
Deuteron frequency at center	18 Mc
Deuteron frequency at final radius	13.6 Mc
He^3 frequency at center	24.0 Mc
He^3 frequency at final radius	16.2 Mc
Proton energy	740 Mev
Deuteron energy	460 Mev
Alpha-particle energy	915 Mev
He^3 energy	1140 Mev

Figure Captions

Fig. 1. Cross-section of 740-Mev cyclotron.

Fig. 2. The cyclotron resonator and equivalent circuit. The characteristic impedance of the resonator is a function of the distance from the leading edge of the dee such that the range of the vibrating capacitance is minimized.

Fig. 3. Voltage and current vs distance from dee edge. As the frequency is reduced, the voltage node moves to the left. Progressively more electric energy is stored in the low-impedance section of the resonator, correspondingly less has to be stored in the vibrating capacitor, and the capacitance range is reduced.

Fig. 4. Dee and vibrating reeds, showing the equivalent circuit in the longitudinal and lateral directions, and the voltage distribution of the resonant modes in each direction. The dimensions, and hence, the resonant frequencies, of the resonator are comparable in the two directions. Suitable spacing of the reeds displaces the lateral resonances (cross-modes) from the longitudinal mode.

Fig. 5. Cross modes vs frequency. The cross-modes are displaced in frequency from the main mode throughout each range; hence, the main mode alone can be excited by the oscillator.

Fig. 6. The circuit diagram of the cyclotron oscillator. High-speed protection against resonator-induced overcurrents in the grid and anode circuits is provided by a thyratron crowbar.

Fig. 7. Construction details of the oscillator. The weight of the oscillator tube is supported by the polyethylene cone attached to the anode. The rf circuitry is of coaxial construction. The low-conductivity anode-cooling water is transported by means of two 1-in. diam. neoprene fire hoses.

Fig. 8. Block diagram of pulse-control system. The oscillator pulse is timed from the reed-position marker pulse. The arc pulse is timed from the rf by means of a tuned receiver.

Fig. 9. Frequency vs temperature for reed modes. Before the longitudinal slots were cut in the reed tip, the rf heating caused the resonant frequency of the mechanical cross mode to coincide with that of the fundamental mode. The seven slots increased the lateral compliance and reduced the resonant frequency of the cross mode so that only the fundamental is excited.

Fig. 10. Block diagram of the reed control system. The reeds are excited by audio amplifiers. Reed 2 is self-excited and oscillates at its own fundamental frequency. Reed 1 is driven from the signal generated by Reed 2 and is kept in tune by control of the d. c. component of motor current. The amplitude of each reed is controlled independently by actuating the gain of each amplifier.

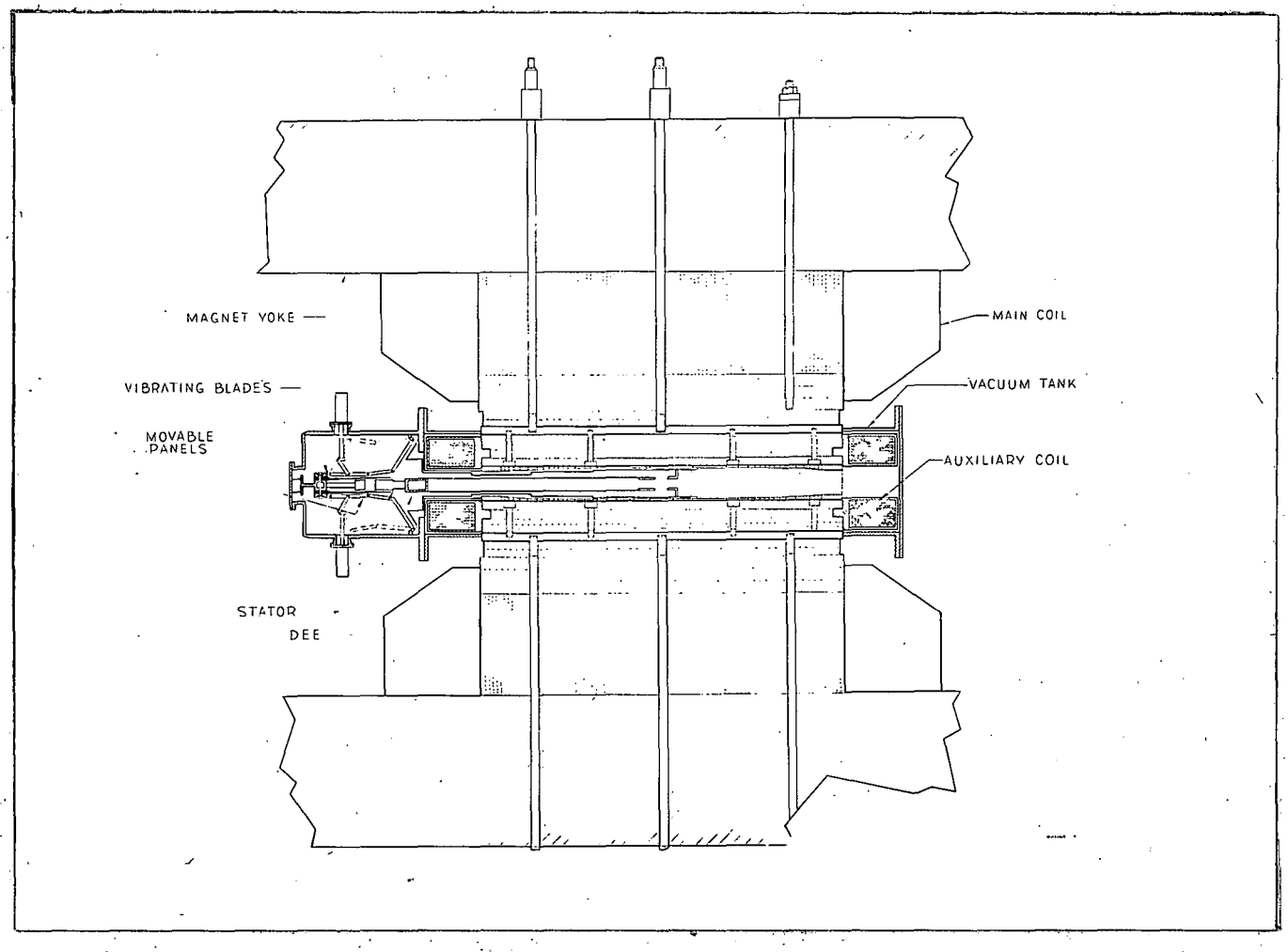
MAGNET YOKE
VIBRATING BLADES
MOVABLE PANELS
STATOR
DEE
MAIN COIL
VACUUM TANK
AUXILIARY COIL

Fig. 1.

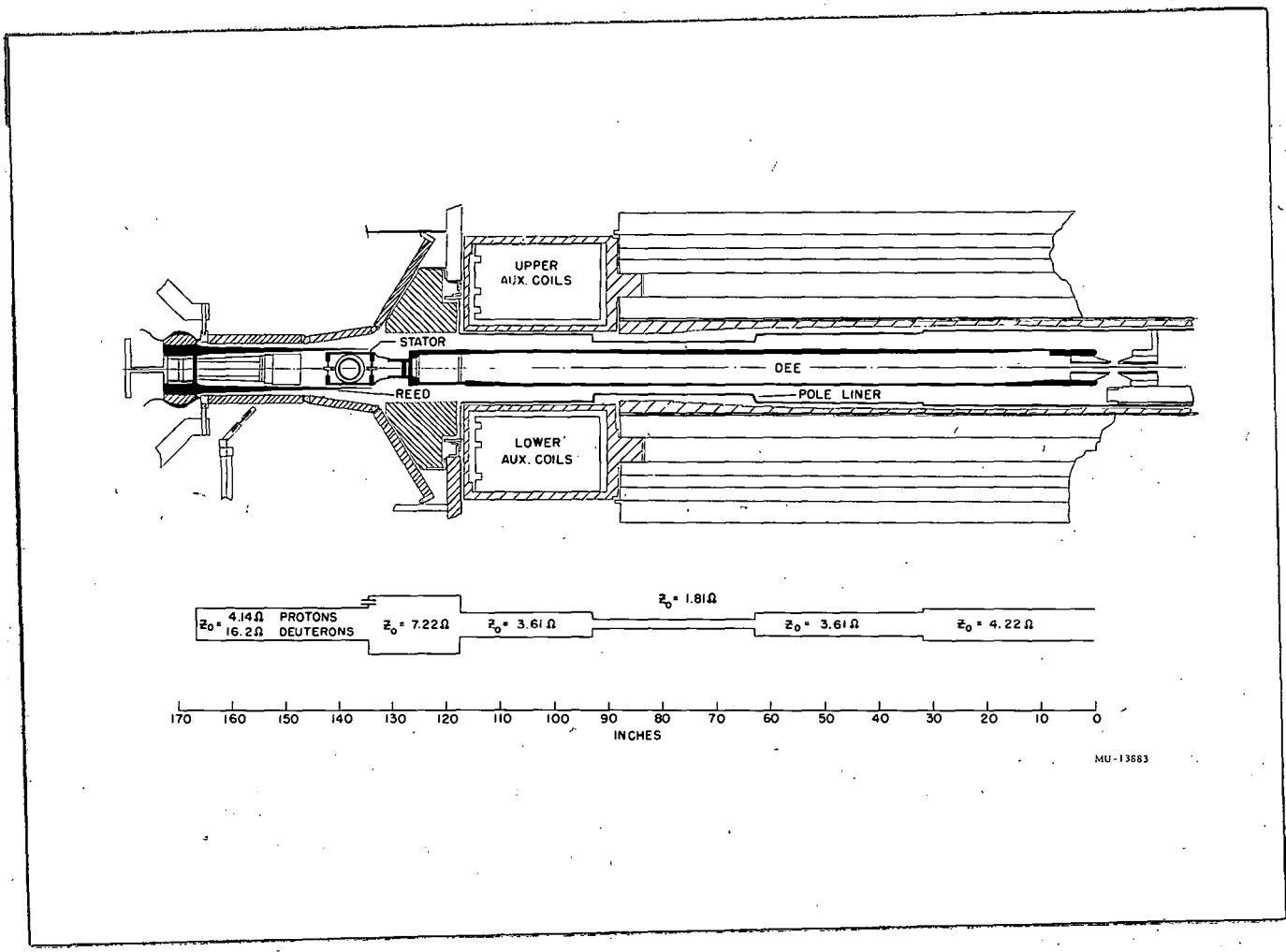
UPPER
AUX. COILS
STATOR
DEE
REED
POLE LINER
LOWER
AUX. COILS
Z_0 = 4.14Ω PROTONS
16.2Ω DEUTERONS
Z_0 = 7.22Ω
Z_0 = 3.61Ω
Z_0 = 1.81Ω
Z_0 = 3.61Ω
Z_0 = 4.22Ω
170 160 150 140 130 120 110 100 90 80 70 60 50 40 30 20 10 0
INCHES
MU-13683

Fig. 2.

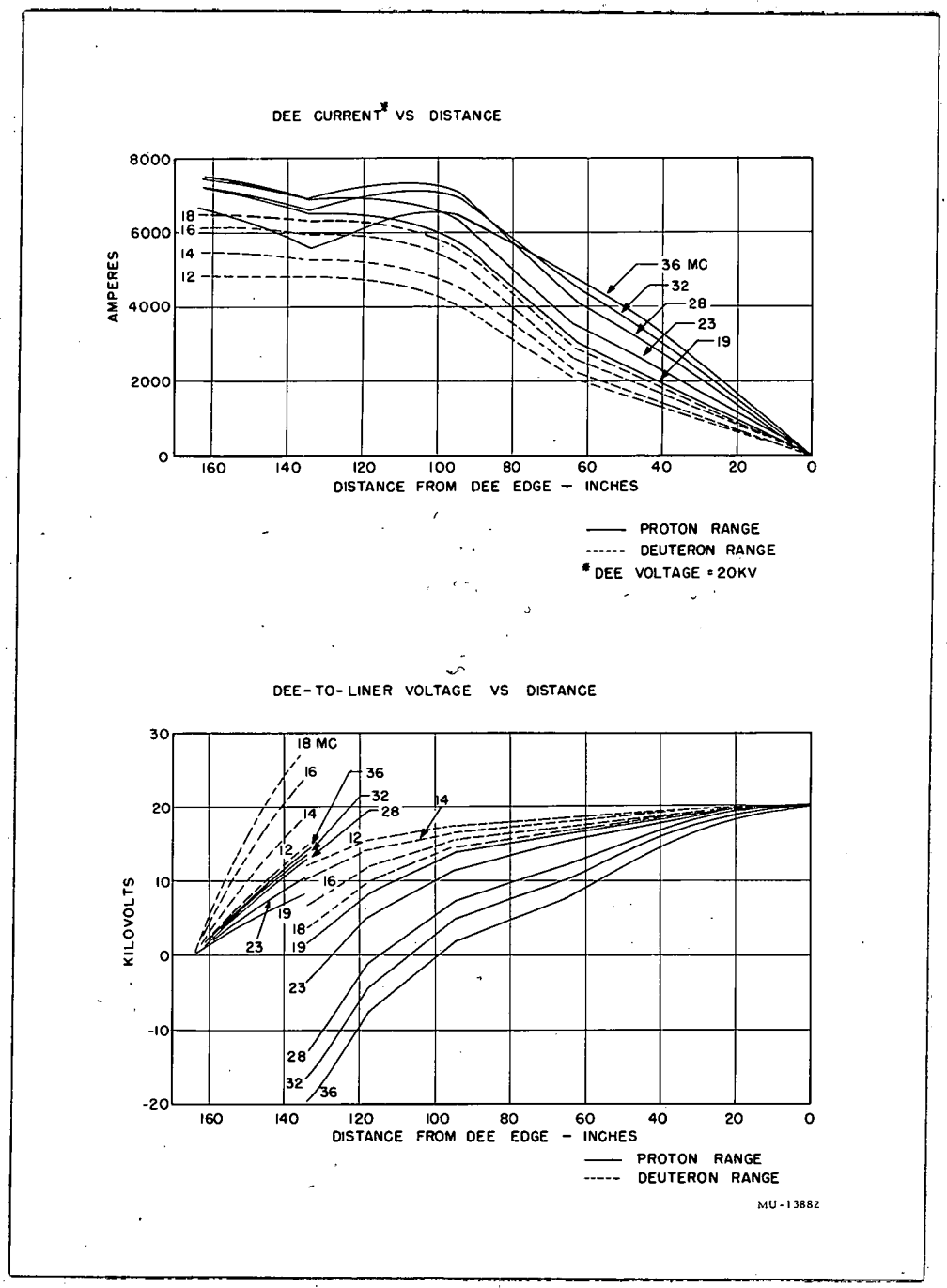
DEE CURRENT* VS DISTANCE
AMPERES
8000
6000
4000
2000
0
160
140
120
100
80
60
40
20
0
DISTANCE FROM DEE EDGE – INCHES
18
16
14
12
36 MC
32
28
23
19
PROTON RANGE
DEUTERON RANGE
*DEE VOLTAGE = 20KV
DEE-TO-LINER VOLTAGE VS DISTANCE
KILOVOLTS
30
20
10
0
-10
-20
18 MC
16
36
32
28
14
12
16
19
18
23
DISTANCE FROM DEE EDGE – INCHES
PROTON RANGE
DEUTERON RANGE
MU-13882

Fig. 3.

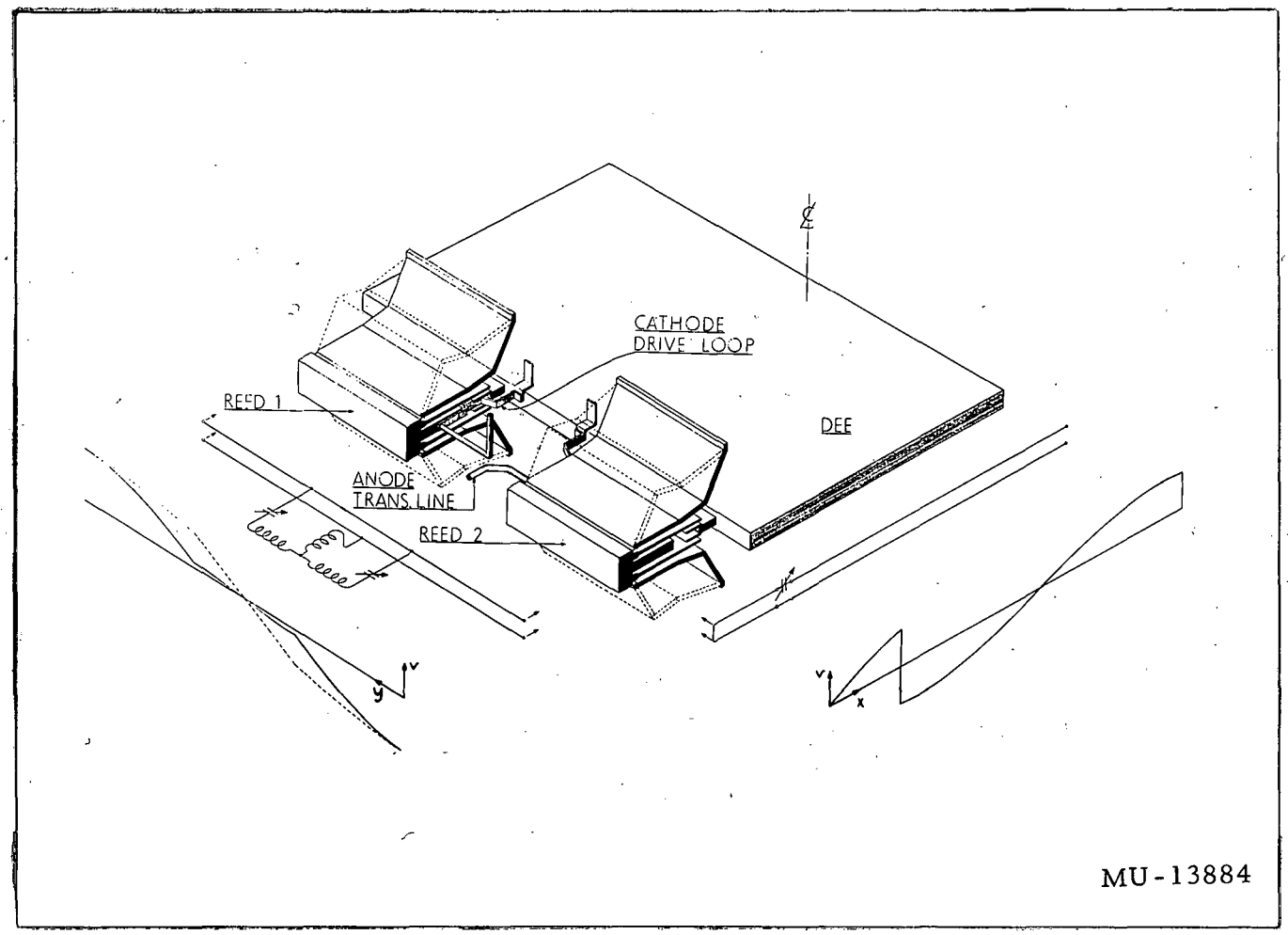
CATHODE
DRIVE LOOP
REED 1
DEE
ANODE
TRANS. LINE
REED 2
MU-13884

Fig. 4.

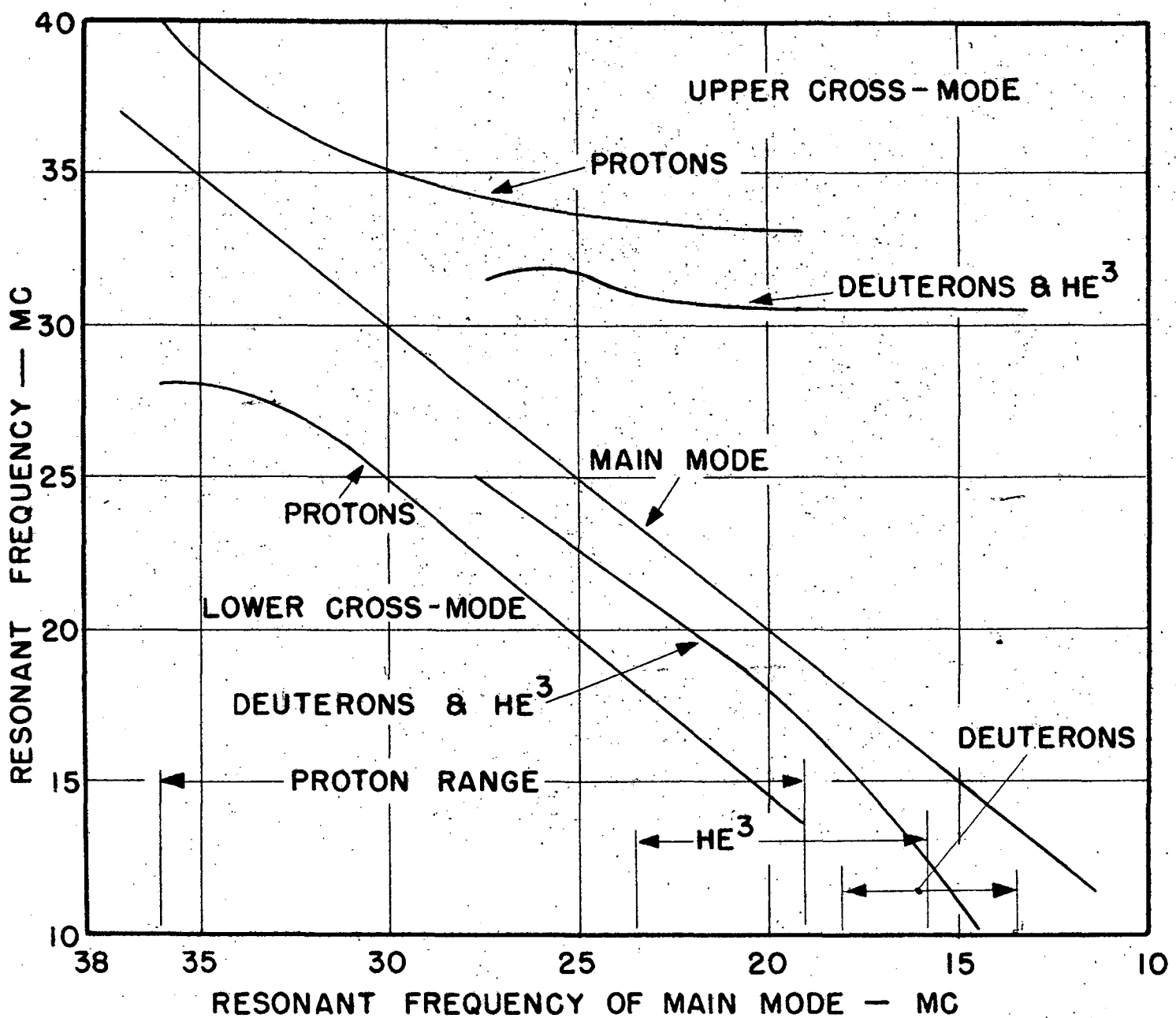

DISTRIBUTION OF RESONATOR MODES

Fig. 5
517 68-1

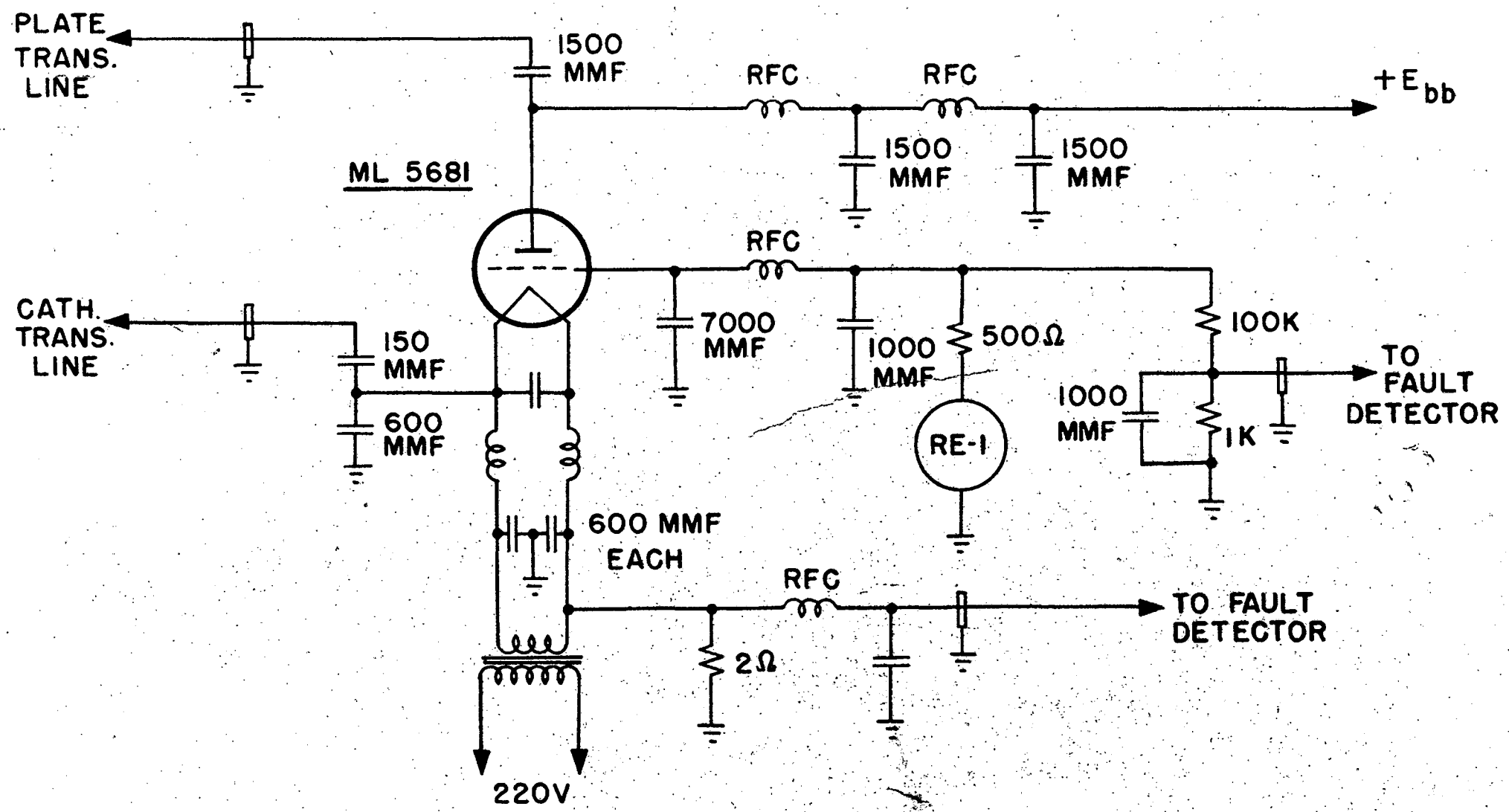

OSCILLATOR

Fig. 6

51769-1

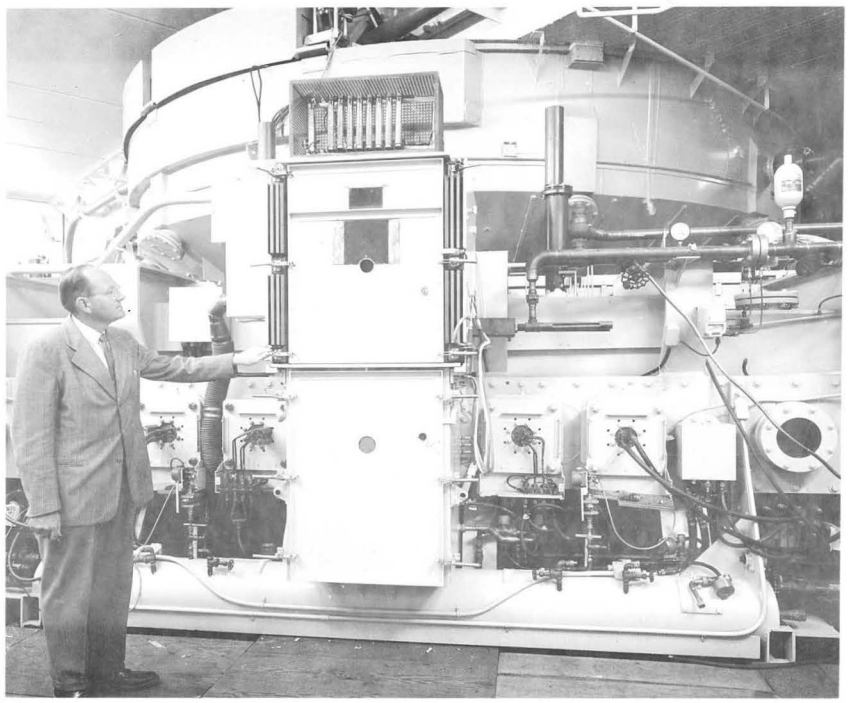

Fig. 7.

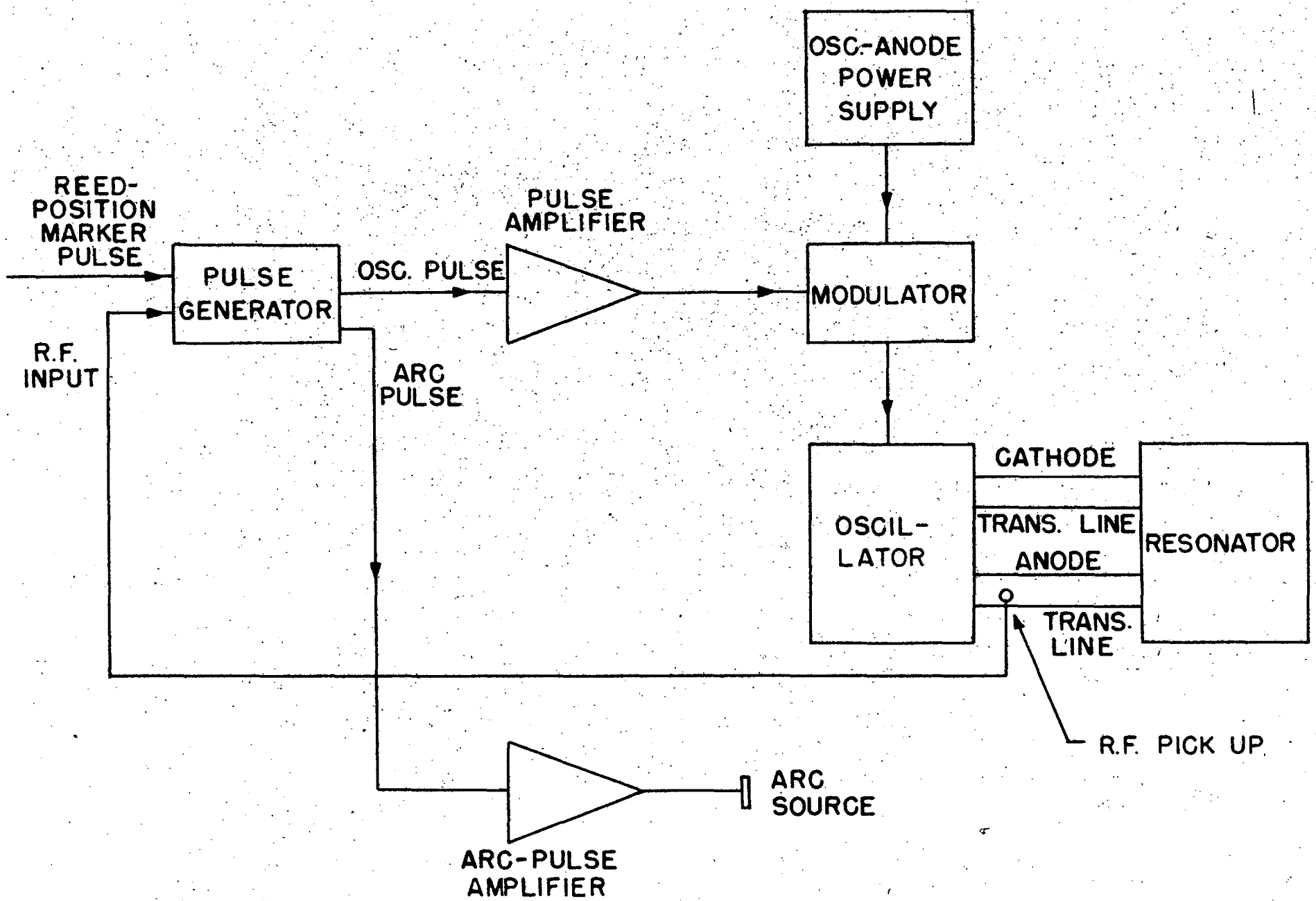

PULSE-CONTROL SYSTEM

Fig. 8

5177 3-1

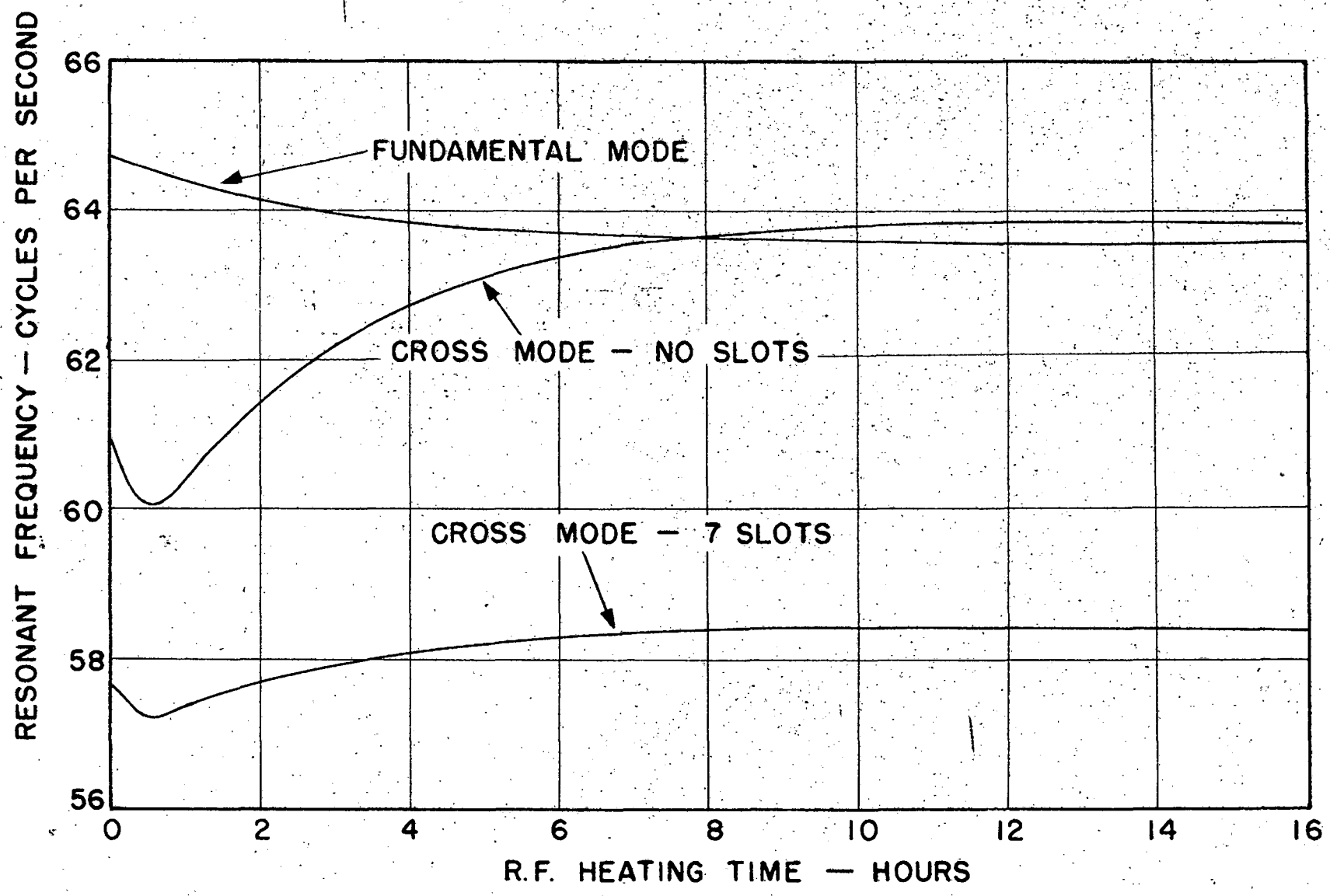

EFFECT OF TEMPERATURE ON REED RESONANT FREQUENCIES

Fig. 9

51771-1

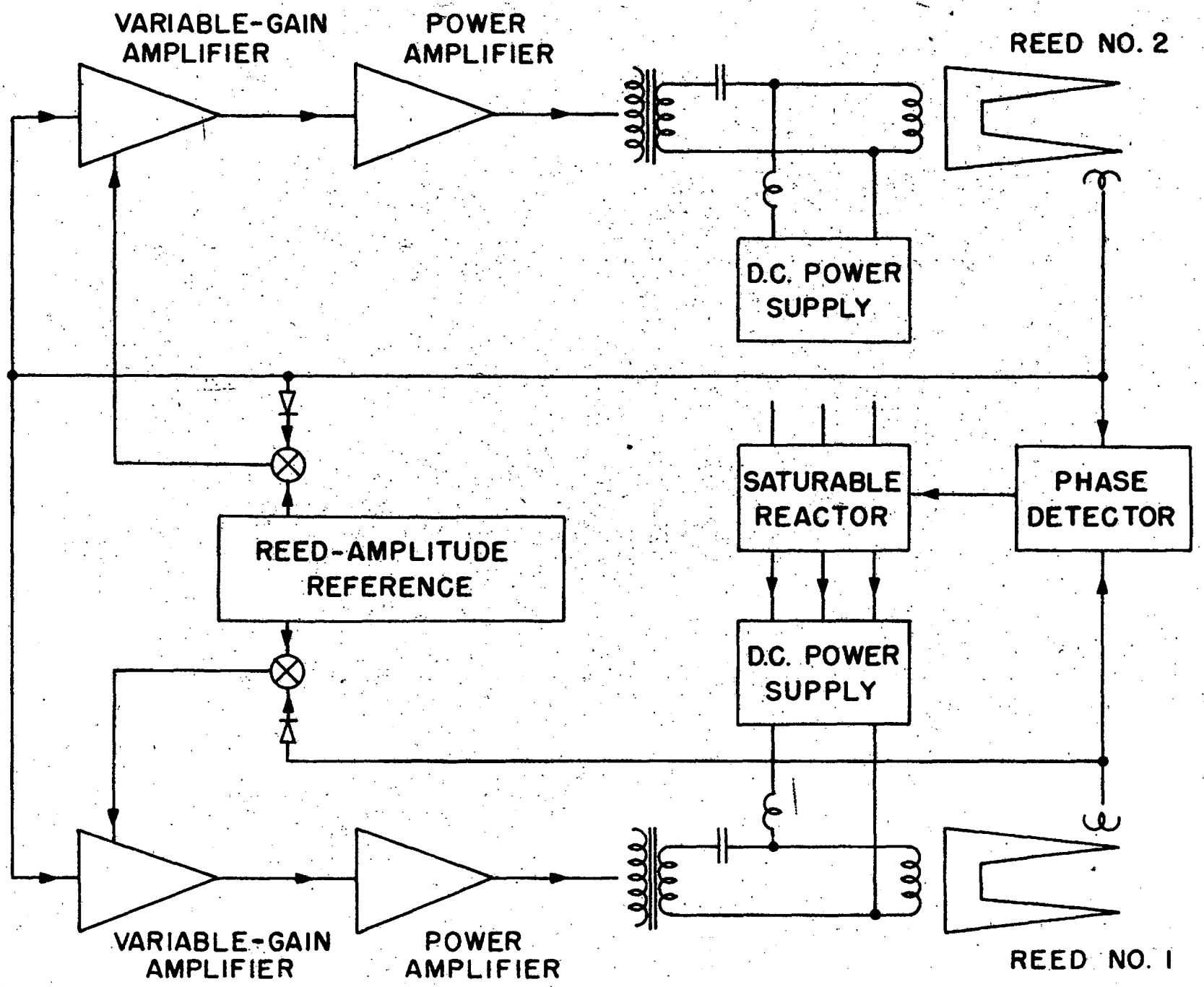

VIBRATING-REED CONTROL SYSTEM

Fig. 10

51770-1