UCRL 3802

UNIVERSITY OF CALIFORNIA

Radiation Laboratory

TWO-WEEK LOAN COPY

This is a Library Circulating Copy
which may be borrowed for two weeks.
For a personal retention copy, call
Tech. Info. Division, Ext. 5545

A HIGH-VELOCITY POINT ON THE RANGE-ENERGY CURVE FOR EMULSION

BERKELEY, CALIFORNIA

DISCLAIMER

This document was prepared as an account of work sponsored by the United States Government. While this document is believed to contain correct information, neither the United States Government nor any agency thereof, nor the Regents of the University of California, nor any of their employees, makes any warranty, express or implied, or assumes any legal responsibility for the accuracy, completeness, or usefulness of any information, apparatus, product, or process disclosed, or represents that its use would not infringe privately owned rights. Reference herein to any specific commercial product, process, or service by its trade name, trademark, manufacturer, or otherwise, does not necessarily constitute or imply its endorsement, recommendation, or favoring by the United States Government or any agency thereof, or the Regents of the University of California. The views and opinions of authors expressed herein do not necessarily state or reflect those of the United States Government or any agency thereof or the Regents of the University of California.

UCRL-3802
Physics and Mathematics

UNIVERSITY OF CALIFORNIA

Radiation Laboratory
Berkeley, California

Contract No. W-7405-eng-48

A HIGH-VELOCITY POINT ON THE RANGE-ENERGY CURVE FOR EMULSION

Renée B. Feldman

June 4, 1957

Printed for the U.S. Atomic Energy Commission

A HIGH-VELOCITY POINT ON THE RANGE-ENERGY CURVE FOR EMULSION

Renée B. Feldman

Radiation Laboratory
University of California
Berkeley, California

June 4, 1957

ABSTRACT

Range measurements were made in Ilford G.5 emulsion exposed to a magnetically separated beam of positive K mesons accompanied by pions of the same momentum, 360 Mev/c. The pions had a velocity $v = 0.92c$. Five π-meson tracks, each approximately 34 cm in length, were measured. The momentum of each particle was also determined. The results were then compared with the Barkas range-energy curve, and found to be $0.5 \pm 1.0\%$ higher.

A HIGH-VELOCITY POINT ON THE RANGE-ENERGY CURVE FOR EMULSION

Renée B. Feldman

Radiation Laboratory
University of California
Berkeley, California

June 4, 1957

INTRODUCTION

These measurements were undertaken because of the scarcity of range-energy information on particles with high velocities. The highest velocity heretofore measured was that of pions with an equivalent proton energy of 700 Mev, a track length of 13 cm, and a β of 0.82.[1] The pions in this exposure had an equivalent proton energy of 1600 Mev, tracks that were 34 cm long, and a β of more than 0.92. The range-energy relation curve in this region is an extrapolation of that at lower velocities and assumes the Bethe-Bloch theory and the Sternheimer density correction.

The exposure consisted of sixty pellicles of Ilford G.5 emulsion, each of which measured 13 by 3 in. by 600μ (see Fig. 1). The stack was exposed by Heckman, Smith, and Barkas to a magnetically separated beam of positive K mesons and pions 90° from the target. The pellicles were made long enough to stop the background pions. The K mesons were used for a mass determination, and a graph of residual range vs entrance coordinate was made.[2]

In his paper,[3] Barkas has normalized all the measured ranges to "equivalent proton ranges," which are the ranges that protons would have at the velocities of the measured particles. The quantity λ is defined by

$$\lambda \equiv \frac{Z^2 R}{M} - B_z ,$$

where λ is the equivalent proton range, Z is the charge, R is the range in centimeters of the measured particle, and M is the ratio of the mass of the measured particle to the mass of the proton. In this case, B_z was estimated by Barkas[4] to be of the order of 10^{-5} cm and, as such is negligible for this experiment.

The factor λ and the ratios of mass to momentum and to kinetic energy are all functions solely of the particle velocity. Therefore we have

$$\lambda = R/M = f(p/M) = g(T/M) ,$$

where p is the momentum of the measured particle and T is its kinetic energy.

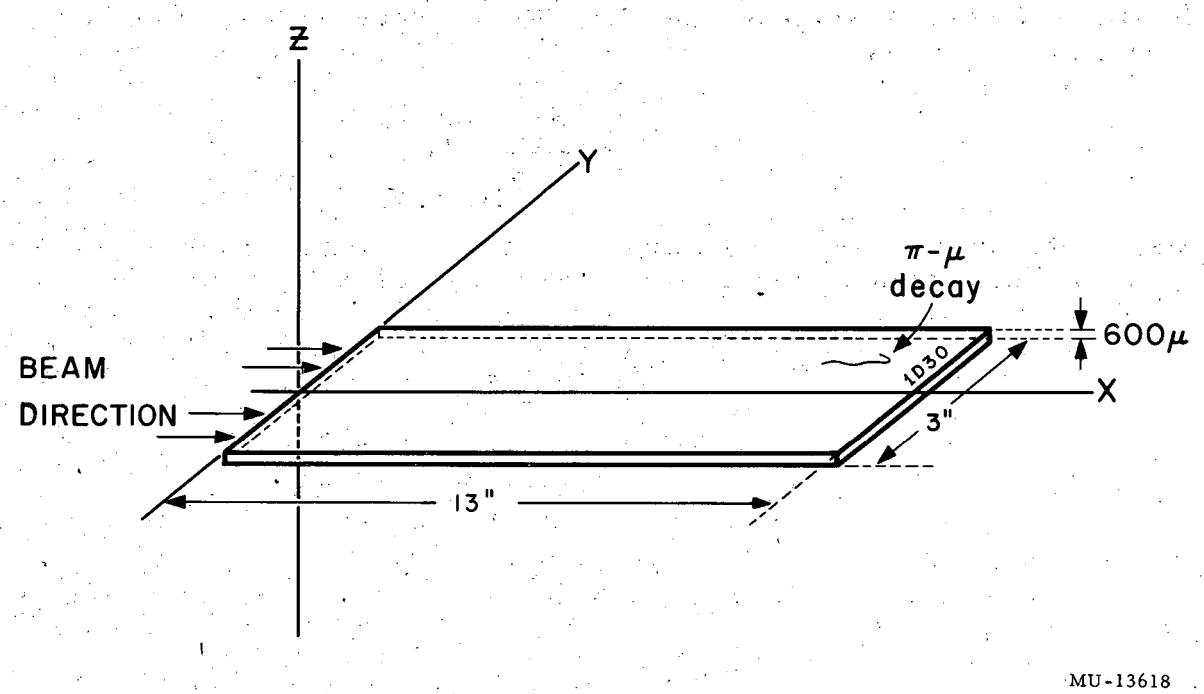

Fig. 1. Typical pellicle of the "1D" stack.

Because the beam is magnetically separated, the momentum of the pion is the same as the momentum of the K mesons entering at the same grid coordinate. Knowing the ratio of the K-meson mass to the proton mass to be 0.526491,[2] and using the aforementioned graph of residual range vs entrance position, I obtained the K-meson range at the point of each entering pion. From this range, we can determine the pion momentum using the range-energy curve,[3] which is believed to be reliable to better than 1% in this region. There is an over-all possible error of 1% in the pion-momentum determination.

Knowing the ratio between the pion mass and the proton mass to be 0.14882,[5] I calculated the equivalent proton energy and converted the range to the equivalent proton range, which I then plotted and compared with the Barkas values for the same momenta. For comparison we define the percentage deviation as

$$U = \frac{R_p - R_B}{R_B} ,$$

where R_B is the theoretical value of the range from the Barkas curve, and R_p is the equivalent proton range of the measured pion. The final results are

$$\langle U \rangle = 0.5 \pm 1.0\% .$$

MEASUREMENTS

The far edge of the "1D" stack was scanned for pi-mu decays in which the pion track was flat and had an angle that would take it approximately to the front edge. Out of the seventeen tracks observed, five pions did come into the front edge with an acceptable dip. These tracks were measured by a process similar to that by which the K-meson mass-ratio measurements were made. The track can be described as the sum of straight-line segments, in which a new segment is measured each time the angle of the track changes by 5° and each time it enters a new pellicle. We can write

$$R = \sum_{\text{segments}} \left[(\Delta x)^2 + (\Delta y)^2 + (S_o \Delta z)^2 \right]^{1/2}$$

where S_o is the shrinkage factor, determined by measurement before and after processing. The track does not have to be followed completely to the front edge. Where the particle enters the emulsion, the range is almost completely in the x direction, so that the amount of missing track can be estimated to within 100 μ, and by use of the angle at the point nearest the front edge, the track can be projected to its entrance point and the range added.

RESULTS

The results of the pion measurements are shown in the table below:

Range-energy curve comparison

Particle No.	R_K (cm)	$P_K = P_\pi$ (Mev/c)	β	R (cm)	$\lambda^*_{eq.pr.}$ (cm)	λ^{**}_B (cm)	U	τ T/M (Mev)
1	5.70	345	0.9268	33.369	224.2	223	0.4%	1563
6	5.95	350	0.9289	34.408	231.2	228	1.3%	1594
7	6.60	362	0.9329	34.919	234.6	242	-2.9%	1669
10	5.70	345	0.9268	34.282	230.3	223	3.1%	1563
16	6.02	351	0.9292	34.405	231.2	230	0.4%	1600

Range straggle = 1.9%

$\langle U \rangle = 0.5 \pm 1.0\%$

$^*\lambda_{eq.pr.} \equiv R_p$

$^{**}\lambda_B \equiv R_B$

ACKNOWLEDGMENTS

I would like to thank Dr. Walter H. Barkas, who suggested the problem, and Donald W. Feldman, who helped with the calculations.

BIBLIOGRAPHY

1. Barkas, Barrett, Cüer, Heckman, Smith, and Ticho; The Range-Energy Relation in Emulsion. Part 1. Range Measurements. UCRL-3768, April 1957.
2. Heckman, Smith, and Barkas, Nuovo Cimento 3, 85 (1955).
3. W.H. Barkas, The Range-Energy Relation in Emulsion. Part II. The Theoretical Range, UCRL-3769, April 1957.
4. W.H. Barkas, Phys. Rev. 89, 1019 (1953).
5. W.H. Barkas et al., Phys. Rev. 101, 778 (1956).