UCRL 3911 Suppl
C.2

UNIVERSITY OF CALIFORNIA

Radiation Laboratory

TWO-WEEK LOAN COPY

This is a Library Circulating Copy
which may be borrowed for two weeks.
For a personal retention copy, call
Tech. Info. Division, Ext. 5545

BERKELEY, CALIFORNIA

UCRL-3911 Suppl
C.2

DISCLAIMER

This document was prepared as an account of work sponsored by the United States Government. While this document is believed to contain correct information, neither the United States Government nor any agency thereof, nor the Regents of the University of California, nor any of their employees, makes any warranty, express or implied, or assumes any legal responsibility for the accuracy, completeness, or usefulness of any information, apparatus, product, or process disclosed, or represents that its use would not infringe privately owned rights. Reference herein to any specific commercial product, process, or service by its trade name, trademark, manufacturer, or otherwise, does not necessarily constitute or imply its endorsement, recommendation, or favoring by the United States Government or any agency thereof, or the Regents of the University of California. The views and opinions of authors expressed herein do not necessarily state or reflect those of the United States Government or any agency thereof or the Regents of the University of California.

UCRL-3911 Supplement

UNIVERSITY OF CALIFORNIA
Radiation Laboratory
Berkeley, California

Contract No. W-7405-eng-48

LONGITUDINAL DISPERSION IN SOLVENT-EXTRACTION COLUMNS: NUMERICAL TABLES

Alice K. McMullen, Terukatsu Miyauchi, and Theodore Vermeulen

January 22, 1958

Printed for the U. S. Atomic Energy Commission

This report was prepared as an account of Government sponsored work. Neither the United States, nor the Commission, nor any person acting on behalf of the Commission:

A. Makes any warranty or representation, express or implied, with respect to the accuracy, completeness, or usefulness of the information contained in this report, or that the use of any information, apparatus, method, or process disclosed in this report may not infringe privately owned rights; or

B. Assumes any liabilities with respect to the use of, or for damages resulting from the use of any information, apparatus, method, or process disclosed in this report.

As used in the above, "person acting on behalf of the Commission" includes any employee or contractor of the Commission to the extent that such employee or contractor prepares, handles or distributes, or provides access to, any information pursuant to his employment or contract with the Commission.

LONGITUDINAL DISPERSION IN SOLVENT-EXTRACTION COLUMNS: NUMERICAL TABLES

Alice K. McMullen, Terukatsu Miyauchi, and Theodore Vermeulen

Radiation Laboratory and Department of Chemical Engineering
University of California, Berkeley, California

January 22, 1958

ABSTRACT

A theoretical analysis of longitudinal dispersion in countercurrent columns has been made by Miyauchi (UCRL-3911), as a function of the rates of dispersion in the two phases, the mass-transfer coefficient, the equilibrium partition ratio, and the rates of fluid flow. In the study presented herein, the equations previously obtained have been solved numerically for a large number of typical conditions by use of the IBM 701 computer. The resulting concentration-distributions are tabulated in this report.

LONGITUDINAL DISPERSION IN SOLVENT-EXTRACTION COLUMNS: NUMERICAL TABLES

Alice K. McMullen, Terukatsu Miyauchi, and Theodore Vermeulen

Radiation Laboratory and Department of Chemical Engineering
University of California, Berkeley, California

January 22, 1958

INTRODUCTION

Longitudinal dispersion is known to control the performance of multicompartment agitated reactors, from the work of Yagi and Miyauchi;[4] and of pulsed extraction columns, from studies by Vermeulen, Lane, Lehman, and Rubin.[3] More recently, the coefficients of longitudinal dispersion in packed columns have been measured by Jacques and Vermeulen.[1]

Thus it becomes important to be able to interpret experimental extraction data in terms of the combined effects of mass transfer and longitudinal dispersion; and to make design predictions for the result of these two effects. A complex, but exact, mathematical solution of this problem has been obtained by Miyauchi.[2] Numerical solutions for Miyauchi's equations are developed in this report, which is to serve a two-fold purpose. First, interpolation methods can be used to obtain theoretical concentration gradients for any given combination of operating variables. Second, the exact results can be used for testing rapid approximate methods of calculation under development now and to be developed in the future.

EQUATIONS

For one-dimensional steady-state counterflow of two immiscible liquids, the continuity equation are

$$\left.\begin{aligned} \epsilon_x E_x \, d^2c_x/dz^2 - F_x \, dc_x/d_z - K_x a \, (c_x - mc_y) &= 0 \\ \epsilon_y E_y \, d^2c_y/dz^2 + F_y \, dc_y/dz + K_x a \, (c_x - mc_y) &= 0 \end{aligned}\right\} , \qquad (1)$$

where E_x and E_y are the dispersion coefficients of the respective phases (each is assumed constant); F_x and F_y are the superficial velocities; ϵ_x and ϵ_y are the void fractions; c_x and c_y are the concentrations of the transferring component at the point of interest; m is the equilibrium

partition coefficient (assumed constant); Z is the length variable; K_x is the over-all mass-transfer coefficient relative to phase X; and a is the interfacial area per unit volume.

Rearrangement of the equations[1] into dimensionless form gives

$$\left.\begin{aligned} d^2C_x/dZ^2 - P_xB\, dC_x/dZ - N_{ox}P_xB\,(C_x - mC_y) &= 0 \\ d^2C_y/dZ^2 + P_yB\, dC_y/dZ + N_{oy}P_yB\,(C_x - mC_y) &= 0 \end{aligned}\right\} \qquad (2)$$

where $C_x = c_x/c_x^0$, $C_y = c_y/c_x^0$, $P_x = u_xd/E_x$, $P_y = u_yd/E_y$, $N_{ox} = K_xaL/F_x$, $N_{oy} = K_xaL/F_y$, $B = L/d$, $u_x = F_x/\epsilon_x$, $u_y = F_y/\epsilon_y$, and $Z = z/L$.

The boundary conditions have been shown to be

$$\left.\begin{aligned} &\text{at } Z = 0: && -dC_x/dZ = P_xB\,(1 - C_{x0}), \\ & && -dC_y/dZ = 0\,; \\ &\text{at } Z = 1: && -dC_x/dZ = 0\,, \\ & && -dC_y/dZ = P_yB\,(C_{y1} - C_y^1)\,. \end{aligned}\right\} \qquad (4)$$

Eliminating the C_y term from Eq. (2) gives a single linear differential equation of fourth order,

$$d^4C_x/dZ^4 - \alpha\, d^3C_x/dZ^3 - \beta d^2C_x/dZ^2 - \gamma dC_x/dZ = 0 \qquad (5)$$

where α, β, and γ are constants independent of Z, as defined below.

With the appropriate boundary conditions, the solution of Eq. (5) is

$$\left.\begin{aligned} \frac{C_x - mC_y^1}{1 - mC_y^1} &= A_1\exp(\lambda_1Z) + A_2\exp(\lambda_2Z) + A_3\exp(\lambda_3Z) + A_4\exp(\lambda_4Z) \\ \frac{m(C_y - C_y^1)}{1 - mC_y^1} &= a_1A_1\exp(\lambda_1Z) + a_2A_2\exp(\lambda_2Z) + a_3A_3\exp(\lambda_3Z) + a_4A_4\exp(\lambda_4Z) \end{aligned}\right\} \qquad (6)$$

where

$$A_1 = D_{A1}/D_A,\ A_2 = D_{A2}/D_A,\ A_3 = D_{A3}/D_A,\ A_4 = D_{A4}/D_A\,;$$

---

[1]Numbered equations in this supplement are the same as in the original report (UCRL-3911).

$$\left\{\begin{array}{l}
D_A = D_{A1} - \begin{vmatrix} 1 - \frac{\lambda_2}{P_x B} & 1 - \frac{\lambda_3}{P_x B} & 1 - \frac{\lambda_4}{P_x B} \\ \lambda_2 a_2 & \lambda_3 a_3 & \lambda_4 a_4 \\ \lambda_2 \exp(\lambda_2) & \lambda_3 \exp(\lambda_3) & \lambda_4 \exp(\lambda_4) \end{vmatrix} \\
D_{A1} = \begin{vmatrix} \lambda_2 a_2 & \lambda_3 a_3 & \lambda_4 a_4 \\ \lambda_2 \exp(\lambda_2) & \lambda_3 \exp(\lambda_3) & \lambda_4 \exp(\lambda_4) \\ (1+\frac{\lambda_2}{P_y B}) a_2 \exp(\lambda_2) & (1+\frac{\lambda_3}{P_y B}) a_3 \exp(\lambda_3) & (1+\frac{\lambda_4}{P_y B}) a_4 \exp(\lambda_4) \end{vmatrix} \\
D_{A2} = \begin{vmatrix} \lambda_3 a_3 & \lambda_4 a_4 \\ \lambda_3 \exp(\lambda_3) & \lambda_4 \exp(\lambda_4) \end{vmatrix} \\
D_{A3} = \begin{vmatrix} \lambda_2 a_2 & \lambda_4 a_4 \\ \lambda_2 \exp(\lambda_2) & \lambda_4 \exp(\lambda_4) \end{vmatrix} \text{ and } D_{A4} = - \begin{vmatrix} \lambda_2 a_2 & \lambda_3 a_3 \\ \lambda_2 \exp(\lambda_2) & \lambda_3 \exp(\lambda_3) \end{vmatrix} \\
a_j = 1 + \lambda_j / N_{ox} - \lambda_j^2 / N_{ox} P_x B, \text{ with } j = 1,\ 2,\ 3, \text{ and } 4;
\end{array}\right\}$$

$$\left.\begin{array}{l}
\lambda_1 = 0 \\
\lambda_2 = a/3 + 2\sqrt{p}\cos(u/3) \\
\lambda_3 = a/3 + 2\sqrt{p}\cos(u/3 + 2\pi/3) \\
\lambda_4 = a/3 + 2\sqrt{p}\cos(u/3 + 4\pi/3)
\end{array}\right\},$$

where u is determined as an angle between 0 and π such that

$$\cos u = q/p^{3/2};$$

and

$$\left.\begin{aligned} p &= (\alpha/3)^2 + \beta/3 \\ q &= (\alpha/3)^3 + \alpha\beta/6 + \gamma/2 \end{aligned}\right\} ,$$

with

$$\left.\begin{aligned} \alpha &= P_x B - P_y B \\ \beta &= N_{ox} P_x B + P_x B\, P_y B + N_{ox} P_y B\, (\Lambda) \\ \gamma &= N_{ox} P_x B\, P_y B\, (1 - \Lambda) \end{aligned}\right\} .$$

COMPUTATION

The sequence of operations required to evaluate Eq. (6) is shown in Fig. 1. In the programming of this sequence for the 701 computer, the "regional" method was selected. For this purpose the following subroutines from the Computer Laboratory library were utilized:

602	Program assembly
022A	To load regional binary cards
410R	Square root
028	To load absolute binary cards
DF-P05	Decimal-punch routine for fourteen 5-digit decimal integers, with sign.
DUAL	Floating-point interpretive routine
984	Memory dump
925	To correct the check sum on absolute binary cards.

New subroutines were programmed in this study, in order to evaluate cos and $\tan^{-1}$ functions. The approximations given by Hastings[1] were used:

$$\tan^{-1} v = \sum_{i=0}^{7} C_{2i+1}\, v^{2i+1}$$

$$\cos w = \sin\left(\frac{\pi}{2} - w\right) = \sin \frac{\pi}{2} v$$

$$= \sum_{i=0}^{3} C'_{2i+1}\, v^{2i+1} ,$$

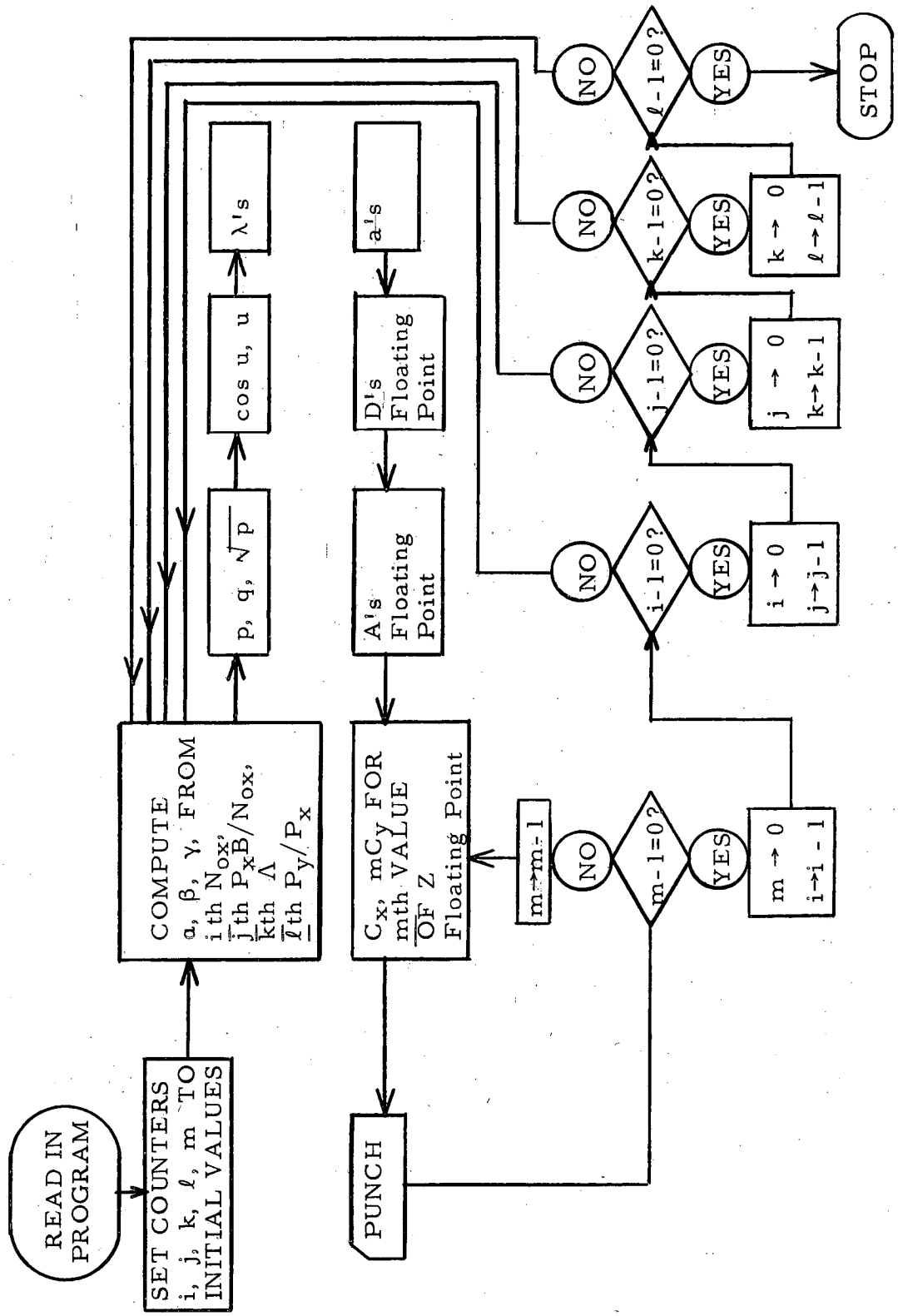

Fig. 1. Sequence of operations for evaluation of Eq. (6).

where, in each case, $-1 \leq v \leq 1$, and the constants C or C' are given by Hastings. Both these routines were accurate to at least six significant figures.

The output cards from the 701 were run through the 514 Reproducing Punch, with a special board to shift columns; and then through the 650 to convert the parameter ratios to independent values for the different parameters involved.

TABLES

The following arrangement of variables has been adopted for presenting the numerical results of the foregoing computations:

Λ	0.625 (x2) 16;
N_{ox}	1 (x2) 8 (in three cases, extended to 64);
P_xB	computed as a ratio to N_{ox}: 0.125, 0.5, 1, 2, 8;
P_yB	computed as a ratio to P_{xB}: 0.25, 1, 4.

Values of Λ and N_{ox} are used as central subheadings for the respective blocks of columnar results. Concentration-profile values are given for the following positrons:

Z 0.00. 0.05, 0.15, 0.50, 0.85, 0.95, 1.00 .

The dependent variables are the generalized concentration values.

$$"X" = (C_x - mC_y^1) / (1 - mC_y^1)$$

and

$$"Y" = m(C_y - C_y^1) / (1 - mC_y^1) \quad ,$$

where "X" and "Y" are the abbreviated designations used as column headings in the tables.

As an aid in the development of simplified approximate relations, the following additional function has been computed:

$$(PB)_x = \left[\frac{1}{P_xB} + \frac{1}{\Lambda P_yB}\right]^{-1} .$$

The term $(PB)_x$ is seen to be a composite Peclet group, reflecting the mixing contributions of P_xB and P_yB. Its values are given in the right-hand column of the tables.

A total of 675 combinations of the parameters were selected for computation; of these 45 fell beyond the scope of the program, and are therefore excluded from the tabulated results. Values for $\Lambda = 1$, with $P_y = P_x$, were obtained by manual averaging of the results from $\Lambda = 0.99$ and $\Lambda = 1.01$. There is considerable duplication between the "X" and the "Y" tables, since "X" at Λ and N_{ox} is equal to (1 - "Y") at $1/\Lambda$ and ΛN_{ox}. Allowing for this duplication, the tables contain about 750 independent profiles.

The computations were generally accurate to ±1 in the fifth place; since the figures were not rounded in printing the final four-place tables, the results are usually accurate to ±1 in the fourth place.

ACKNOWLEDGMENT

Thanks are due the staff of the University's Computer Laboratory, and particularly to Mrs. Diana Lees, for assistance in selecting the appropriate subroutines for the 701 computer; and to Haruo Hanamura of the Controller's Office, for help in the final listing of the results on the IBM 407 printer. The work reported was performed under the aupsices of the U.S. Atomic Energy Commission.

BIBLIOGRAPHY

1. Cecil Hastings, Jr., Approximations for Digital Computers (University Press, Princeton; 1955).
2. Gabriel Jacques, and Theodore Vermeulen, UCRL-8029, Nov. 1957.
3. Terukatsu Miyauchi, Longitudinal Dispersion in Solvent-Extraction Columns: Mathematical Theory, UCRL-3911, Aug. 1957.
4. Vermeulen, Lane, Rubin, and Lehman, A.I. Ch. E. Journal (in press).
5. S. Yagi, and T. Miyauchi, Chem. Eng. (Tokyo) 17, 382 (1953); 19, 507 (1955).

P XB	P YB	X-00	05	15	50	85	95	100	Y-00	05	15	50	85	95	100	PBX
.			Λ = .0625		N_{ox} = 1					Λ = .0625		N_{ox} = 1				
0.125	0.031	.5394	.5365	.5314	.5176	.5109	.5103	.5103	.0305	.0305	.0305	.0304	.0302	.0301	.0300	0.001
0.125	0.125	.5392	.5363	.5312	.5174	.5107	.5101	.5100	.0305	.0305	.0305	.0301	.0292	.0289	.0287	0.007
0.125	0.500	.5384	.5356	.5304	.5166	.5099	.5093	.5092	.0306	.0306	.0304	.0288	.0257	.0246	.0240	0.025
0.500	0.125	.6012	.5915	.5734	.5248	.5002	.4979	.4976	.0313	.0313	.0313	.0308	.0299	.0296	.0294	0.007
0.500	0.500	.6007	.5909	.5728	.5241	.4993	.4970	.4967	.0314	.0314	.0312	.0295	.0262	.0251	.0245	0.029
0.500	2.000	.5991	.5893	.5711	.5220	.4969	.4945	.4942	.0316	.0315	.0308	.0254	.0172	.0146	.0133	0.100
1.000	0.250	.6642	.6478	.6172	.5334	.4889	.4845	.4840	.0322	.0322	.0321	.0311	.0293	.0286	.0283	0.015
1.000	1.000	.6635	.6470	.6163	.5321	.4871	.4827	.4822	.0323	.0323	.0319	.0284	.0228	.0209	.0199	0.058
1.000	4.000	.6620	.6454	.6145	.5294	.4838	.4793	.4787	.0325	.0323	.0311	.0223	.0118	.0089	.0074	0.200
2.000	0.500	.7482	.7235	.6773	.5475	.4731	.4652	.4641	.0334	.0334	.0332	.0311	.0276	.0264	.0257	0.030
2.000	2.000	.7475	.7228	.6764	.5456	.4700	.4620	.4609	.0336	.0335	.0328	.0263	.0175	.0148	.0134	0.117
2.000	8.000	.7465	.7216	.6750	.5430	.4665	.4583	.4572	.0338	.0335	.0312	.0191	.0079	.0050	.0036	0.400
8.000	2.000	.9025	.8644	.7930	.5872	.4434	.4214	.4179	.0363	.0362	.0353	.0278	.0180	.0151	.0138	0.123
8.000	8.000	.9024	.8642	.7925	.5849	.4392	.4168	.4132	.0366	.0361	.0334	.0194	.0076	.0047	.0033	0.470
8.000	32.000	.9021	.8638	.7919	.5834	.4373	.4150	.4114	.0367	.0354	.0306	.0158	.0047	.0021	.0008	1.600
.			Λ = .0625		N_{ox} = 2					Λ = .0625		N_{ox} = 2				
0.250	0.062	.4169	.4098	.3968	.3625	.3457	.3442	.3440	.0409	.0409	.0409	.0406	.0400	.0397	.0396	0.003
0.250	0.250	.4163	.4092	.3961	.3617	.3449	.3434	.3432	.0410	.0410	.0409	.0397	.0374	.0365	.0361	0.014
0.250	1.000	.4142	.4071	.3939	.3592	.3422	.3406	.3404	.0412	.0411	.0407	.0365	.0293	.0269	.0256	0.050
1.000	0.250	.5390	.5166	.4756	.3686	.3146	.3095	.3088	.0431	.0431	.0430	.0415	.0390	.0381	.0376	0.015
1.000	1.000	.5377	.5152	.4741	.3660	.3111	.3058	.3051	.0434	.0433	.0427	.0377	.0299	.0274	.0261	0.058
1.000	4.000	.5349	.5123	.4708	.3610	.3045	.2991	.2983	.0438	.0435	.0416	.0289	.0150	.0112	.0093	0.200
2.000	0.500	.6381	.6030	.5394	.3745	.2885	.2797	.2785	.0450	.0450	.0447	.0415	.0365	.0349	.0340	0.030
2.000	2.000	.6369	.6017	.5376	.3706	.2821	.2730	.2717	.0455	.0453	.0440	.0344	.0222	.0187	.0170	0.117
2.000	8.000	.6349	.5995	.5350	.3653	.2750	.2656	.2644	.0459	.0453	.0416	.0238	.0093	.0058	.0042	0.400
4.000	1.000	.7444	.6951	.6066	.3818	.2597	.2454	.2434	.0472	.0471	.0464	.0399	.0309	.0282	.0269	0.061
4.000	4.000	.7437	.6942	.6052	.3767	.2506	.2358	.2337	.0478	.0474	.0448	.0287	.0136	.0100	.0083	0.235
4.000	16.000	.7426	.6929	.6033	.3722	.2450	.2302	.2280	.0482	.0468	.0407	.0198	.0062	.0032	.0017	0.800
16.000	4.000	.9040	.8305	.7015	.3900	.2170	.1885	.1830	.0510	.0505	.0474	.0288	.0128	.0093	.0077	0.246
16.000	16.000	.9039	.8302	.7005	.3850	.2104	.1819	.1764	.0514	.0498	.0424	.0188	.0052	.0026	.0014	0.941
16.000	64.000	.9036	.8297	.6995	.3831	.2086	.1802	.1747	.0515	.0479	.0387	.0163	.0038	.0014	.0003	3.200

P XB	P YB	X-00	05	15	50	85	95	100	Y-00	05	15	50	85	95	100	PBX
.			Λ =	.0625	N_{ox} =	4				Λ =	.0625	N_{ox} =	4			
0.500	0.125	.3507	.3350	.3067	.2360	.2029	.1999	.1995	.0500	.0500	.0499	.0490	.0474	.0469	.0466	0.007
0.500	0.500	.3493	.3335	.3051	.2338	.2000	.1969	.1965	.0502	.0501	.0498	.0465	.0411	.0393	.0383	0.029
0.500	2.000	.3454	.3296	.3009	.2280	.1927	.1894	.1890	.0506	.0505	.0492	.0392	.0259	.0220	.0200	0.100
2.000	0.500	.5266	.4816	.4039	.2283	.1511	.1436	.1426	.0535	.0535	.0529	.0485	.0422	.0403	.0393	0.030
2.000	2.000	.5249	.4796	.4014	.2216	.1399	.1318	.1307	.0543	.0540	.0521	.0387	.0238	.0200	.0182	0.117
2.000	8.000	.5220	.4763	.3971	.2128	.1284	.1201	.1190	.0550	.0540	.0484	.0244	.0087	.0054	.0038	0.400
4.000	1.000	.6385	.5704	.4569	.2191	.1203	.1099	.1084	.0557	.0555	.0543	.0451	.0340	.0309	.0294	0.061
4.000	4.000	.6373	.5690	.4543	.2097	.1048	.0936	.0921	.0567	.0560	.0519	.0295	.0125	.0091	.0075	0.235
4.000	16.000	.6354	.5666	.4506	.2018	.0966	.0856	.0841	.0572	.0550	.0454	.0179	.0048	.0024	.0013	0.800
8.000	2.000	.7470	.6527	.5004	.2056	.0919	.0785	.0764	.0577	.0573	.0546	.0377	.0217	.0180	.0163	0.123
8.000	8.000	.7463	.6517	.4977	.1945	.0772	.0638	.0618	.0586	.0571	.0493	.0200	.0056	.0033	.0023	0.470
8.000	32.000	.7453	.6501	.4946	.1890	.0730	.0600	.0580	.0588	.0547	.0416	.0137	.0029	.0012	.0004	1.600
32.000	8.000	.9049	.7655	.5497	.1748	.0550	.0397	.0362	.0602	.0584	.0492	.0173	.0041	.0023	.0016	0.492
32.000	32.000	.9048	.7649	.5468	.1682	.0507	.0361	.0328	.0603	.0554	.0400	.0109	.0018	.0007	.0002	1.882
.			Λ =	.0625	N_{ox}	8				Λ =	.0625	N_{ox} =	8			
1.000	0.250	.3363	.3050	.2525	.1427	.1005	.0968	.0963	.0564	.0564	.0561	.0535	.0497	.0486	.0480	0.015
1.000	1.000	.3342	.3028	.2499	.1370	.0913	.0871	.0866	.0570	.0569	.0557	.0468	.0357	.0326	.0310	0.058
1.000	4.000	.3297	.2980	.2441	.1259	.0760	.0714	.0708	.0580	.0574	.0536	.0322	.0147	.0108	.0090	0.200
4.000	1.000	.5286	.4430	.3150	.1124	.0556	.0503	.0495	.0594	.0591	.0573	.0455	.0332	.0302	.0287	0.061
4.000	4.000	.5271	.4411	.3112	.0977	.0344	.0286	.0278	.0607	.0597	.0536	.0257	.0093	.0066	.0054	0.235
4.000	16.000	.5241	.4373	.3049	.0862	.0255	.0204	.0197	.0612	.0579	.0439	.0120	.0024	.0011	.0006	0.800
8.000	2.000	.6404	.5128	.3338	.0904	.0338	.0282	.0272	.0608	.0601	.0561	.0348	.0186	.0154	.0139	0.123
8.000	8.000	.6392	.5108	.3287	.0729	.0165	.0118	.0111	.0618	.0594	.0477	.0132	.0025	.0014	.0010	0.470
8.000	32.000	.6372	.5077	.3226	.0657	.0133	.0093	.0087	.0619	.0553	.0361	.0069	.0009	.0003	.0001	1.600
16.000	4.000	.7481	.5730	.3420	.0673	.0163	.0116	.0107	.0618	.0603	.0522	.0207	.0063	.0044	.0036	0.246
16.000	16.000	.7473	.5711	.3354	.0526	.0081	.0049	.0044	.0622	.0573	.0388	.0062	.0007	.0003	.0001	0.941
16.000	64.000	.7462	.5687	.3303	.0492	.0071	.0043	.0038	.0622	.0515	.0299	.0042	.0004	.0001		3.200
64.000	16.000	.9051	.6492	.3376	.0352	.0036	.0018	.0014	.0623	.0565	.0353	.0039	.0003	.0001		0.984
64.000	64.000	.9050	.6475	.3317	.0318	.0030	.0015	.0011	.0623	.0495	.0254	.0023	.0001			3.764

P XB	P YB	X-00	05	15	50	85	95	100	Y-00	05	15	50	85	95	100	PBX
•			Λ =	.1250	N_{ox} =	1				Λ =	.1250	N_{ox} =	1			
0.125	0.031	.5529	.5502	.5452	.5318	.5253	.5248	.5247	.0592	.0592	.0592	.0590	.0585	.0584	.0583	0.003
0.125	0.125	.5526	.5498	.5448	.5315	.5249	.5244	.5243	.0593	.0593	.0593	.0584	.0567	.0561	.0557	0.013
0.125	0.500	.5512	.5485	.5434	.5300	.5234	.5228	.5228	.0596	.0595	.0592	.0561	.0501	.0480	.0468	0.041
0.500	0.125	.6132	.6037	.5862	.5390	.5151	.5128	.5126	.0608	.0608	.0607	.0598	.0581	.0574	.0571	0.015
0.500	0.500	.6121	.6026	.5850	.5376	.5134	.5111	.5108	.0611	.0610	.0607	.0573	.0511	.0489	.0477	0.055
0.500	2.000	.6092	.5996	.5818	.5336	.5088	.5065	.5062	.0617	.0615	.0603	.0497	.0338	.0287	.0261	0.166
1.000	0.250	.6744	.6585	.6288	.5474	.5041	.4999	.4994	.0625	.0625	.0623	.0604	.0569	.0556	.0549	0.030
1.000	1.000	.6730	.6571	.6272	.5450	.5008	.4965	.4960	.0629	.0629	.0621	.0555	.0444	.0407	.0388	0.111
1.000	4.000	.6702	.6541	.6238	.5401	.4946	.4901	.4895	.0637	.0634	.0610	.0440	.0235	.0176	.0147	0.333
2.000	0.500	.7560	.7321	.6873	.5613	.4886	.4809	.4799	.0650	.0649	.0645	.0605	.0536	.0513	.0500	0.060
2.000	2.000	.7548	.7308	.6856	.5577	.4830	.4750	.4739	.0657	.0655	.0640	.0516	.0343	.0291	.0264	0.222
2.000	8.000	.7530	.7288	.6831	.5528	.4763	.4681	.4669	.0666	.0658	.0614	.0380	.0160	.0101	.0072	0.666
8.000	2.000	.9059	.8691	.8001	.5998	.4578	.4359	.4323	.0709	.0706	.0689	.0544	.0353	.0298	.0271	0.242
8.000	8.000	.9057	.8688	.7993	.5956	.4498	.4272	.4235	.0720	.0711	.0657	.0387	.0153	.0095	.0068	0.888
8.000	32.000	.9051	.8680	.7981	.5929	.4463	.4236	.4199	.0724	.0698	.0606	.0317	.0096	.0042	.0016	2.666
•			Λ =	.1250	N_{ox} =	2				Λ =	.1250	N_{ox} =	2			
0.250	0.062	.4397	.4329	.4203	.3873	.3712	.3697	.3696	.0787	.0787	.0786	.0781	.0769	.0764	.0762	0.007
0.250	0.250	.4385	.4317	.4191	.3859	.3696	.3682	.3680	.0789	.0789	.0787	.0764	.0720	.0704	.0696	0.027
0.250	1.000	.4348	.4279	.4151	.3814	.3646	.3631	.3629	.0796	.0795	.0786	.0706	.0569	.0522	.0498	0.083
1.000	0.250	.5576	.5361	.4968	.3938	.3416	.3366	.3360	.0829	.0829	.0826	.0799	.0750	.0733	.0724	0.030
1.000	1.000	.5552	.5336	.4939	.3891	.3351	.3298	.3292	.0838	.0836	.0826	.0730	.0579	.0531	.0506	0.111
1.000	4.000	.5503	.5285	.4881	.3800	.3231	.3175	.3168	.0853	.0848	.0812	.0571	.0299	.0224	.0187	0.333
2.000	0.500	.6532	.6196	.5586	.3997	.3161	.3074	.3063	.0867	.0866	.0859	.0799	.0703	.0672	.0656	0.060
2.000	2.000	.6511	.6173	.5556	.3926	.3044	.2951	.2938	.0882	.0879	.0855	.0670	.0435	.0368	.0334	0.222
2.000	8.000	.6478	.6136	.5508	.3830	.2912	.2815	.2801	.0899	.0887	.0817	.0476	.0191	.0120	.0086	0.666
4.000	1.000	.7557	.7086	.6238	.4068	.2865	.2723	.2703	.0912	.0910	.0895	.0772	.0599	.0547	.0521	0.121
4.000	4.000	.7546	.7072	.6215	.3977	.2699	.2546	.2524	.0934	.0926	.0877	.0569	.0274	.0202	.0168	0.444
4.000	16.000	.7528	.7050	.6181	.3895	.2593	.2438	.2416	.0947	.0922	.0806	.0402	.0130	.0067	.0037	1.333
16.000	4.000	.9088	.8390	.7160	.4134	.2376	.2077	.2019	.0997	.0988	.0928	.0573	.0259	.0189	.0156	0.484
16.000	16.000	.9087	.8386	.7143	.4043	.2251	.1950	.1892	.1012	.0982	.0842	.0384	.0110	.0055	.0030	1.777
16.000	64.000	.9081	.8376	.7124	.4006	.2216	.1916	.1859	.1016	.0948	.0773	.0335	.0081	.0030	.0007	5.333

P XB	P YB	X-00	05	15	50	85	95	100	Y-00	05	15	50	85	95	100	PBX
•			Λ = .1250		N_{ox} = 4					Λ = .1250		N_{ox} = 4				
0.500	0.125	.3812	.3662	.3392	.2717	.2399	.2370	.2366	.0954	.0953	.0952	.0935	.0906	.0895	.0890	0.015
0.500	0.500	.3787	.3636	.3364	.2677	.2347	.2316	.2312	.0960	.0959	.0953	.0891	.0789	.0754	.0736	0.055
0.500	2.000	.3720	.3568	.3291	.2574	.2216	.2182	.2177	.0977	.0974	.0951	.0765	.0512	.0434	.0395	0.166
2.000	0.500	.5501	.5073	.4334	.2647	.1887	.1812	.1802	.1024	.1023	.1013	.0930	.0810	.0773	.0754	0.060
2.000	2.000	.5475	.5044	.4293	.2530	.1687	.1600	.1588	.1051	.1046	.1010	.0756	.0473	.0398	.0361	0.222
2.000	8.000	.5426	.4989	.4220	.2372	.1476	.1384	.1372	.1078	.1059	.0955	.0500	.0186	.0116	.0083	0.666
4.000	1.000	.6574	.5929	.4849	.2552	.1550	.1439	.1424	.1071	.1068	.1045	.0872	.0659	.0600	.0571	0.121
4.000	4.000	.6559	.5910	.4811	.2387	.1268	.1143	.1125	.1109	.1097	.1019	.0595	.0261	.0190	.0157	0.444
4.000	16.000	.6527	.5870	.4747	.2242	.1111	.0988	.0971	.1128	.1088	.0908	.0376	.0106	.0054	.0029	1.333
8.000	2.000	.7611	.6720	.5274	.2404	.1202	.1051	.1027	.1121	.1114	.1064	.0743	.0433	.0361	.0327	0.242
8.000	8.000	.7603	.6707	.5234	.2205	.0929	.0774	.0750	.1156	.1129	.0982	.0418	.0123	.0073	.0052	0.888
8.000	32.000	.7585	.6679	.5178	.2099	.0845	.0697	.0674	.1165	.1089	.0842	.0294	.0065	.0027	.0010	2.666
32.000	8.000	.9108	.7798	.5750	.2021	.0692	.0508	.0465	.1191	.1158	.0984	.0369	.0094	.0054	.0038	0.969
32.000	32.000	.9106	.7787	.5698	.1892	.0603	.0433	.0394	.1200	.1107	.0815	.0239	.0043	.0017	.0006	3.555
•			Λ = .1250		N_{ox} = 8					Λ = .1250		N_{ox} = 8				
1.000	0.250	.3711	.3415	.2916	.1865	.1449	.1412	.1408	.1073	.1073	.1067	.1018	.0947	.0925	.0914	0.030
1.000	1.000	.3680	.3382	.2876	.1767	.1288	.1242	.1235	.1095	.1092	.1070	.0905	.0695	.0635	.0605	0.111
1.000	4.000	.3610	.3306	.2784	.1578	.1018	.0963	.0955	.1130	.1119	.1049	.0655	.0317	.0236	.0196	0.333
4.000	1.000	.5552	.4744	.3529	.1544	.0912	.0845	.0835	.1145	.1140	.1106	.0883	.0650	.0591	.0562	0.121
4.000	4.000	.5536	.4722	.3476	.1289	.0526	.0448	.0436	.1195	.1176	.1063	.0534	.0207	.0148	.0123	0.444
4.000	16.000	.5485	.4657	.3366	.1073	.0349	.0282	.0273	.1215	.1153	.0894	.0273	.0060	.0030	.0016	1.333
8.000	2.000	.6618	.5416	.3718	.1283	.0588	.0505	.0491	.1188	.1176	.1101	.0697	.0382	.0316	.0287	0.242
8.000	8.000	.6604	.5391	.3637	.0964	.0255	.0188	.0177	.1227	.1184	.0965	.0297	.0066	.0037	.0026	0.888
8.000	32.000	.6568	.5334	.3523	.0817	.0183	.0130	.0121	.1234	.1112	.0751	.0164	.0025	.0009	.0003	2.666
16.000	4.000	.7638	.5994	.3798	.0974	.0297	.0220	.0205	.1224	.1197	.1044	.0440	.0145	.0101	.0083	0.484
16.000	16.000	.7626	.5962	.3679	.0688	.0123	.0077	.0069	.1241	.1151	.0801	.0150	.0020	.0009	.0004	1.777
16.000	64.000	.7606	.5918	.3583	.0614	.0100	.0061	.0054	.1243	.1043	.0631	.0102	.0011	.0003		5.333
64.000	16.000	.9113	.6712	.3709	.0485	.0061	.0032	.0025	.1246	.1137	.0737	.0100	.0010	.0004	.0002	1.939
64.000	64.000	.9110	.6679	.3596	.0410	.0044	.0022	.0017	.1247	.1006	.0543	.0060	.0004	.0001		7.111

P XB	P YB	X-00	05	15	50	85	95	100	Y-00	05	15	50	85	95	100	PBX
•			Λ = .2500		N_{ox} = 1					Λ = .2500		N_{ox} = 1				
0.125	0.031	.5779	.5753	.5706	.5580	.5519	.5513	.5512	.1121	.1121	.1120	.1116	.1108	.1105	.1103	0.007
0.125	0.125	.5772	.5747	.5699	.5573	.5511	.5505	.5505	.1123	.1123	.1121	.1105	.1073	.1061	.1055	0.025
0.125	0.500	.9499	.5224	.5674	.5547	.5484	.5478	.5477	.1130	.1129	.1124	.1064	.0952	.0911	.0889	0.062
0.500	0.125	.6350	.6261	.6096	.5650	.5423	.5402	.5400	.1149	.1149	.1147	.1130	.1097	.1085	.1078	0.029
0.500	0.500	.6331	.6242	.6075	.5624	.5393	.5371	.5369	.1157	.1156	.1150	.1086	.0969	.0927	.0905	0.100
0.500	2.000	.6280	.6189	.6020	.5556	.5313	.5290	.5287	.1178	.1174	.1152	.0954	.0653	.0555	.0505	0.250
1.000	0.250	.6931	.6781	.6501	.5732	.5321	.5281	.5276	.1180	.1180	.1176	.1141	.1074	.1050	.1037	0.058
1.000	1.000	.6907	.6756	.6473	.5689	.5263	.5221	.5215	.1196	.1194	.1181	.1055	.0847	.0777	.0740	0.200
1.000	4.000	.6859	.6705	.6415	.5603	.5152	.5107	.5101	.1224	.1217	.1173	.0855	.0464	.0349	.0291	0.500
2.000	0.500	.7705	.7480	.7058	.5865	.5172	.5098	.5088	.1227	.1226	.1219	.1144	.1014	.0970	.0947	0.117
2.000	2.000	.7685	.7458	.7030	.5803	.5073	.4993	.4982	.1254	.1250	.1222	.0990	.0662	.0562	.0511	0.400
2.000	8.000	.7654	.7424	.6987	.5719	.4953	.4869	.4858	.1285	.1271	.1189	.0750	.0321	.0204	.0146	1.000
8.000	2.000	.9122	.8779	.8133	.6235	.4848	.4629	.4594	.1351	.1346	.1313	.1043	.0681	.0576	.0523	0.470
8.000	8.000	.9120	.8775	.8123	.6164	.4705	.4474	.4436	.1390	.1374	.1275	.0765	.0308	.0194	.0138	1.600
8.000	32.000	.9110	.8762	.8102	.6115	.4640	.4406	.4368	.1405	.1358	.1187	.0636	.0198	.0087	.0033	4.000
•			Λ = .2500		N_{ox} = 2					Λ = .2500		N_{ox} = 2				
0.250	0.062	.4803	.4739	.4623	.4316	.4167	.4153	.4151	.1461	.1461	.1460	.1449	.1427	.1419	.1415	0.014
0.250	0.250	.4783	.4719	.4602	.4293	.4140	.4126	.4124	.1468	.1468	.1464	.1421	.1340	.1311	.1295	0.050
0.250	1.000	.4720	.4656	.4536	.4217	.4055	.4040	.4038	.1490	.1488	.1473	.1327	.1073	.0986	.0939	0.125
1.000	0.250	.5907	.5709	.5344	.4386	.3897	.3850	.3844	.1538	.1538	.1533	.1482	.1392	.1361	.1344	0.058
1.000	1.000	.5870	.5669	.5299	.4310	.3787	.3735	.3728	.1567	.1565	.1545	.1369	.1091	.1000	.0953	0.200
1.000	4.000	.5793	.5588	.5207	.4159	.3584	.3526	.3518	.1620	.1610	.1546	.1108	.0597	.0449	.0374	0.500
2.000	0.500	.6802	.6492	.5928	.4448	.3654	.3570	.3559	.1610	.1608	.1596	.1486	.1309	.1251	.1221	0.117
2.000	2.000	.6774	.6460	.5885	.4334	.3457	.3361	.3348	.1662	.1656	.1613	.1276	.0838	.0710	.0645	0.400
2.000	8.000	.6723	.6404	.5812	.4175	.3229	.3126	.3112	.1721	.1700	.1574	.0950	.0397	.0252	.0180	1.000
4.000	1.000	.7761	.7328	.6549	.4520	.3352	.3210	.3190	.1702	.1698	.1672	.1446	.1127	.1030	.0981	0.235
4.000	4.000	.7750	.7314	.6520	.4375	.3070	.2907	.2883	.1778	.1765	.1675	.1112	.0552	.0409	.0341	0.800
4.000	16.000	.7724	.7282	.6468	.4236	.2882	.2714	.2690	.1827	.1782	.1572	.0822	.0277	.0145	.0081	2.000
16.000	4.000	.9178	.8548	.7431	.4579	.2778	.2452	.2388	.1902	.1886	.1779	.1129	.0528	.0387	.0321	0.941
16.000	16.000	.9178	.8546	.7408	.4428	.2554	.2222	.2157	.1960	.1905	.1653	.0796	.0240	.0122	.0067	3.200
16.000	64.000	.9169	.8530	.7377	.4362	.2486	.2156	.2092	.1974	.1852	.1535	.0702	.0179	.0068	.0016	8.000

P XB	P YB	X-00	05	15	50	85	95	100	Y-00	05	15	50	85	95	100	PBX
•			Λ =	.2500	N_{ox} =	4				Λ =	.2500	N_{ox} =	4			
0.500	0.125	.4343	.4207	.3960	.3339	.3044	.3017	.3014	.1746	.1745	.1742	.1712	.1658	.1639	.1629	0.029
0.500	0.500	.4305	.4167	.3917	.3276	.2959	.2929	.2926	.1768	.1766	.1755	.1644	.1458	.1395	.1361	0.100
0.500	2.000	.4205	.4065	.3806	.3116	.2750	.2713	.2709	.1822	.1817	.1776	.1451	.0991	.0845	.0769	0.250
2.000	0.500	.5915	.5526	.4851	.3287	.2551	.2475	.2465	.1883	.1881	.1863	.1713	.1495	.1427	.1392	0.117
2.000	2.000	.5888	.5495	.4804	.3112	.2226	.2129	.2116	.1970	.1961	.1898	.1447	.0925	.0781	.0710	0.400
2.000	8.000	.5824	.5422	.4704	.2863	.1873	.1765	.1750	.2062	.2030	.1850	.1038	.0417	.0264	.0189	1.000
4.000	1.000	.6912	.6330	.5350	.3201	.2178	.2057	.2039	.1990	.1984	.1943	.1631	.1242	.1133	.1079	0.235
4.000	4.000	.6909	.6323	.5318	.2954	.1712	.1562	.1540	.2114	.2093	.1957	.1196	.0555	.0409	.0340	0.800
4.000	16.000	.6866	.6268	.5224	.2712	.1430	.1280	.1258	.2185	.2115	.1802	.0820	.0252	.0131	.0073	2.000
8.000	2.000	.7870	.7075	.5772	.3056	.1747	.1563	.1533	.2116	.2103	.2014	.1438	.0860	.0719	.0653	0.470
8.000	8.000	.7873	.7074	.5733	.2744	.1272	.1076	.1044	.2238	.2191	.1934	.0902	.0293	.0178	.0126	1.600
8.000	32.000	.7847	.7033	.5644	.2554	.1106	.0920	.0890	.2277	.2144	.1708	.0665	.0162	.0069	.0026	4.000
32.000	8.000	.9221	.8073	.6245	.2597	.1020	.0769	.0708	.2322	.2265	.1960	.0824	.0237	.0139	.0098	1.882
32.000	32.000	.9219	.8059	.6164	.2361	.0836	.0610	.0556	.2360	.2199	.1682	.0564	.0115	.0046	.0017	6.400
•			Λ =	.2500	N_{ox} =	8				Λ =	.2500	N_{ox} =	8			
1.000	0.250	.4315	.4047	.3594	.2623	.2221	.2183	.2178	.1955	.1953	.1943	.1856	.1729	.1688	.1668	0.058
1.000	1.000	.4283	.4012	.3548	.2481	.1967	.1913	.1906	.2023	.2018	.1980	.1691	.1317	.1205	.1148	0.200
1.000	4.000	.4202	.3924	.3436	.2209	.1550	.1478	.1468	.2132	.2114	.1997	.1334	.0703	.0532	.0444	0.500
4.000	1.000	.6030	.5308	.4210	.2308	.1569	.1479	.1465	.2133	.2124	.2064	.1668	.1243	.1131	.1077	0.235
4.000	4.000	.6044	.5318	.4178	.1933	.0934	.0814	.0796	.2300	.2268	.2072	.1134	.0487	.0356	.0295	0.800
4.000	16.000	.5979	.5233	.4020	.1568	.0594	.0489	.0474	.2381	.2277	.1836	.0676	.0179	.0092	.0051	2.000
8.000	2.000	.7017	.5954	.4429	.2019	.1096	.0964	.0941	.2264	.2243	.2111	.1390	.0793	.0661	.0599	0.470
8.000	8.000	.7023	.5951	.4343	.1506	.0496	.0379	.0360	.2409	.2335	.1957	.0722	.0194	.0115	.0081	1.600
8.000	32.000	.6969	.5864	.4157	.1219	.0329	.0238	.0223	.2444	.2236	.1607	.0440	.0081	.0033	.0013	4.000
16.000	4.000	.7943	.6505	.4536	.1623	.0622	.0480	.0451	.2387	.2339	.2073	.0976	.0363	.0257	.0213	0.941
16.000	16.000	.7934	.6470	.4361	.1102	.0253	.0165	.0149	.2462	.2308	.1698	.0419	.0073	.0033	.0018	3.200
16.000	64.000	.7901	.6396	.4191	.0937	.0189	.0119	.0106	.2473	.2130	.1392	.0293	.0040	.0013	.0003	8.000
64.000	16.000	.9237	.7153	.4410	.0845	.0148	.0084	.0068	.2482	.2295	.1590	.0305	.0041	.0017	.0009	3.764
64.000	64.000	.9233	.7099	.4206	.0665	.0095	.0051	.0040	.2489	.2072	.1228	.0186	.0018	.0005	.0001	12.800

P XB	P YB	X-00	05	15	50	85	95	100	Y-00	05	15	50	85	95	100	PBX
•			Λ = .2500		N_{ox} = 16					Λ = .2500		N_{ox} = 16				
2.000	0.500	.4397	.3896	.3174	.2067	.1686	.1640	.1634	.2091	.2086	.2051	.1818	.1556	.1483	.1447	0.117
2.000	2.000	.4423	.3920	.3164	.1763	.1108	.1025	.1012	.2246	.2227	.2107	.1445	.0873	.0736	.0669	0.400
2.000	8.000	.4365	.3848	.3022	.1318	.0573	.0490	.0478	.2380	.2316	.1995	.0893	.0317	.0202	.0145	1.000
8.000	2.000	.6126	.4836	.3307	.1508	.0836	.0726	.0706	.2323	.2291	.2108	.1297	.0722	.0600	.0545	0.470
8.000	8.000	.6130	.4819	.3132	.0808	.0197	.0136	.0125	.2468	.2356	.1843	.0523	.0116	.0066	.0047	1.600
8.000	32.000	.6037	.4664	.2805	.0467	.0070	.0041	.0037	.2490	.2182	.1350	.0220	.0027	.0010	.0004	4.000
16.000	4.000	.7084	.5218	.3201	.1030	.0365	.0271	.0251	.2437	.2363	.1995	.0811	.0281	.0198	.0163	0.941
16.000	16.000	.7057	.5128	.2837	.0384	.0047	.0025	.0021	.2494	.2253	.1426	.0197	.0021	.0008	.0004	3.200
16.000	64.000	.6991	.4974	.2526	.0233	.0019	.0009	.0007	.2498	.1968	.1003	.0091	.0006	.0001		8.000
32.000	8.000	.7970	.5461	.2932	.0522	.0092	.0053	.0044	.2488	.2329	.1674	.0344	.0057	.0030	.0021	1.882
32.000	32.000	.7944	.5328	.2465	.0168	.0010	.0004	.0003	.2499	.2050	.1000	.0067	.0003	.0001		6.400
128.000	32.000	.9239	.5611	.2193	.0084	.0003	.0001		.2499	.1964	.0824	.0031	.0001			7.529
•			Λ = .2500		N_{ox} = 32					Λ = .2500		N_{ox} = 32				
4.000	1.000	.4488	.3601	.2647	.1657	.1215	.1136	.1121	.2219	.2200	.2093	.1590	.1165	.1060	.1009	0.235
4.000	4.000	.9682	.8778	.1592	.1031	.0417	.0334	.0320	.4902	.4431	.6183	.0902	.0352	.0257	.0213	0.800
4.000	16.000	.9493	.7576	.9996	.8269	.0090	.0058	.0053	.8842	.6964	.9994	.7585	.0058	.0029	.0016	2.000
16.000	4.000	.6192	.4046	.2349	.0793	.0271	.0196	.0179	.2455	.2346	.1888	.0709	.0238	.0167	.0138	0.941
16.000	16.000	.6146	.3885	.1770	.0135	.0009	.0004	.0003	.2499	.2149	.1148	.0090	.0006	.0002	.0001	3.200
16.000	64.000	.6042	.3623	.1318	.0038	.0001			.2499	.1743	.0638	.0018	.			8.000
32.000	8.000	.7106	.4059	.1927	.0296	.0043	.0023	.0019	.2495	.2257	.1461	.0239	.0034	.0017	.0012	1.882
32.000	32.000	.7059	.3802	.1210	.0023	.			.2499	.1836	.0630	.0012	.			6.400
64.000	64.000	.7944	.3620	.0782	.0003	.			.2499	.1454	.0318	.0001	.			12.800
•			Λ = .2500		N_{ox} = 64					Λ = .2500		N_{ox} = 64				
8.000	2.000	.4590	.3157	.2192	.1214	.0674	.0571	.0547	.2363	.2299	.2027	.1178	.0651	.0542	.0492	0.470
8.000	8.000	.4599	.3098	.1783	.0354	.0064	.0038	.0033	.2491	.2274	.1542	.0314	.0056	.0031	.0022	1.600
8.000	32.000	.4453	.2800	.1167	.0055	.0002			.2499	.1937	.0835	.0039	.0001			4.000
32.000	8.000	.6213	.3004	.1468	.0215	.0029	.0015	.0011	.2496	.2172	.1306	.0193	.0025	.0013	.0009	1.882
32.000	32.000	.6146	.2592	.0587	.0003	.			.2499	.1608	.0391	.0002	.			6.400
64.000	16.000	.7108	.2686	.0849	.0023	.			.2500	.1853	.0687	.0018	.			3.764
64.000	64.000	.7059	.2135	.0222					.2499	.1096	.0116					12.800

P XB	P YB	X-00	05	15	50	85	95	100	Y-00	05	15	50	85	95	100	PBX
•			Λ = .5000		N_{ox} = 1					Λ = .5000		N_{ox} = 1				
0.125	0.031	.6202	.6179	.6137	.6023	.5968	.5963	.5962	.2017	.2016	.2016	.2009	.1994	.1988	.1985	0.013
0.125	0.125	.6192	.6169	.6126	.6012	.5956	.5951	.5950	.2024	.2023	.2021	.1992	.1935	.1913	.1902	0.041
0.125	0.500	.6153	.6130	.6086	.5970	.5912	.5907	.5906	.2046	.2045	.2035	.1929	.1727	.1653	.1613	0.083
0.500	0.125	.6721	.6641	.6492	.6091	.5886	.5867	.5865	.2067	.2066	.2064	.2033	.1973	.1951	.1939	0.055
0.500	0.500	.6692	.6611	.6460	.6050	.5837	.5817	.5815	.2092	.2090	.2079	.1966	.1755	.1680	.1639	0.166
0.500	2.000	.6613	.6531	.6375	.5943	.5710	.5688	.5685	.2157	.2151	.2112	.1764	.1220	.1040	.0946	0.333
1.000	0.250	.7248	.7113	.6862	.6169	.5795	.5759	.5754	.2122	.2121	.2115	.2051	.1932	.1889	.1866	0.111
1.000	1.000	.7213	.7077	.6820	.6102	.5703	.5663	.5658	.2170	.2167	.2144	.1922	.1548	.1421	.1354	0.333
1.000	4.000	.7141	.7001	.6735	.5970	.5528	.5483	.5477	.2261	.2250	.2172	.1615	.0897	.0678	.0565	0.666
2.000	0.500	.7950	.7749	.7371	.6295	.5659	.5590	.5581	.2209	.2207	.2194	.2061	.1829	.1750	.1708	0.222
2.000	2.000	.7925	.7721	.7335	.6203	.5502	.5424	.5413	.2293	.2286	.2237	.1828	.1237	.1052	.0957	0.666
2.000	8.000	.7882	.7674	.7274	.6073	.5310	.5223	.5211	.2393	.2369	.2227	.1452	.0646	.0414	.0296	1.333
8.000	2.000	.9232	.8931	.8362	.6648	.5324	.5107	.5071	.2463	.2455	.2397	.1922	.1271	.1076	.0979	0.888
8.000	8.000	.9235	.8934	.8357	.6548	.5096	.4856	.4816	.2591	.2562	.2391	.1489	.0625	.0395	.0282	2.666
8.000	32.000	.9221	.8915	.8328	.6470	.4985	.4739	.4698	.2644	.2563	.2268	.1272	.0413	.0185	.0071	5.333
•			Λ = .5000		N_{ox} = 2					Λ = .5000		N_{ox} = 2				
0.250	0.062	.5460	.5405	.5303	.5035	.4903	.4891	.4890	.2554	.2554	.2552	.2533	.2495	.2481	.2473	0.027
0.250	0.250	.5431	.5376	.5273	.5000	.4863	.4850	.4849	.2575	.2574	.2567	.2494	.2353	.2301	.2273	0.083
0.250	1.000	.5342	.5285	.5179	.4890	.4738	.4724	.4722	.2638	.2635	.2610	.2364	.1926	.1770	.1688	0.166
1.000	0.250	.6444	.6271	.5953	.5112	.4676	.4633	.4627	.2685	.2684	.2675	.2588	.2432	.2378	.2349	0.111
1.000	1.000	.6398	.6223	.5897	.5007	.4515	.4464	.4458	.2770	.2766	.2733	.2435	.1955	.1795	.1710	0.333
1.000	4.000	.6302	.6121	.5780	.4801	.4221	.4159	.4151	.2924	.2908	.2804	.2082	.1173	.0890	.0743	0.666
2.000	0.500	.7242	.6974	.6485	.5181	.4457	.4378	.4368	.2815	.2813	.2793	.2605	.2300	.2198	.2145	0.222
2.000	2.000	.7218	.6947	.6445	.5032	.4172	.4073	.4059	.2970	.2960	.2888	.2323	.1559	.1326	.1206	0.666
2.000	8.000	.7164	.6887	.6362	.4816	.3834	.3720	.3704	.3147	.3113	.2911	.1868	.0837	.0539	.0387	1.333
4.000	1.000	.8096	.7727	.7059	.5268	.4163	.4021	.4000	.2999	.2993	.2948	.2567	.2015	.1844	.1756	0.444
4.000	4.000	.8105	.7736	.7054	.5089	.3753	.3574	.3548	.3225	.3203	.3057	.2114	.1103	.0827	.0689	1.333
4.000	16.000	.8082	.7707	.6999	.4896	.3459	.3268	.3240	.3379	.3308	.2971	.1685	.0616	.0329	.0184	2.666
16.000	4.000	.9333	.8820	.7899	.5378	.3528	.3159	.3084	.3457	.3430	.3256	.2171	.1075	.0796	.0662	1.777
16.000	16.000	.9343	.8834	.7894	.5180	.3179	.2787	.2708	.3644	.3558	.3155	.1674	.0553	.0286	.0159	5.333
16.000	64.000	.9333	.8816	.7853	.5080	.3060	.2668	.2589	.3699	.3507	.2995	.1513	.0423	.0165	.0039	10.666

P XB	P YB	X-00	05	15	50	85	95	100	Y-00	05	15	50	85	95	100	PBX
•			Λ = .5000		N_{ox} = 4					Λ = .5000		N_{ox} = 4				
0.500	0.125	.5175	.5059	.4848	.4313	.4055	.4031	.4028	.2985	.2985	.2979	.2928	.2837	.2805	.2788	0.055
0.500	0.500	.5130	.5012	.4796	.4230	.3936	.3908	.3904	.3047	.3045	.3026	.2844	.2532	.2423	.2365	0.166
0.500	2.000	.5018	.4896	.4670	.4031	.3660	.3621	.3616	.3191	.3183	.3121	.2619	.1854	.1590	.1448	0.333
2.000	0.500	.6569	.6242	.5670	.4303	.3608	.3532	.3521	.3239	.3235	.3206	.2957	.2591	.2475	.2415	0.222
2.000	2.000	.6578	.6249	.5660	.4106	.3171	.3058	.3042	.3478	.3464	.3364	.2643	.1756	.1494	.1359	0.666
2.000	8.000	.6540	.6204	.5582	.3810	.2684	.2546	.2527	.3736	.3688	.3421	.2142	.0971	.0634	.0456	1.333
4.000	1.000	.7459	.6979	.6161	.4264	.3221	.3084	.3063	.3468	.3458	.3392	.2882	.2225	.2034	.1937	0.444
4.000	4.000	.7514	.7039	.6203	.4000	.2585	.2391	.2362	.3818	.3785	.3576	.2359	.1200	.0900	.0750	1.333
4.000	16.000	.7494	.7010	.6127	.3692	.2151	.1945	.1914	.4042	.3939	.3473	.1846	.0659	.0356	.0200	2.666
8.000	2.000	.8303	.7667	.6608	.4189	.2733	.2498	.2458	.3770	.3749	.3610	.2678	.1673	.1409	.1280	0.888
8.000	8.000	.8357	.7735	.6649	.3839	.2048	.1768	.1720	.4139	.4068	.3680	.1992	.0754	.0473	.0338	2.666
8.000	32.000	.8341	.7704	.6558	.3569	.1753	.1478	.1432	.4283	.4090	.3434	.1614	.0465	.0209	.0081	5.333
32.000	8.000	.9423	.8567	.7154	.3813	.1817	.1422	.1320	.4339	.4254	.3799	.1923	.0665	.0405	.0287	3.555
32.000	32.000	.9431	.8573	.7082	.3472	.1473	.1102	.1008	.4494	.4261	.3485	.1481	.0370	.0155	.0059	10.666
•			Λ = .5000		N_{ox} = 8					Λ = .5000		N_{ox} = 8				
1.000	0.250	.5247	.5022	.4641	.3796	.3415	.3377	.3372	.3313	.3311	.3294	.3152	.2941	.2874	.2839	0.111
1.000	1.000	.5250	.5024	.4628	.3644	.3089	.3025	.3016	.3491	.3483	.3425	.2978	.2371	.2177	.2075	0.333
1.000	4.000	.5222	.4991	.4569	.3371	.2589	.2492	.2478	.3760	.3734	.3572	.2625	.1562	.1210	.1015	0.666
4.000	1.000	.6806	.6222	.5319	.3578	.2692	.2565	.2545	.3727	.3713	.3618	.2985	.2272	.2074	.1976	0.444
4.000	4.000	.6936	.6367	.5432	.3211	.1850	.1654	.1623	.4188	.4140	.3854	.2402	.1194	.0898	.0749	1.333
4.000	16.000	.6927	.6346	.5328	.2768	.1306	.1107	.1076	.4461	.4319	.3708	.1807	.0623	.0342	.0194	2.666
8.000	2.000	.7695	.6869	.5647	.3366	.2103	.1886	.1847	.4076	.4043	.3842	.2702	.1645	.1383	.1256	0.888
8.000	8.000	.7802	.6998	.5708	.2797	.1207	.0967	.0925	.4537	.4432	.3891	.1882	.0661	.0413	.0295	2.666
8.000	32.000	.7769	.6933	.5519	.2358	.0848	.0639	.0603	.4697	.4415	.3517	.1390	.0356	.0160	.0063	5.333
16.000	4.000	.8486	.7419	.5890	.3014	.1456	.1171	.1110	.4444	.4375	.3985	.2231	.0982	.0717	.0596	1.777
16.000	16.000	.8531	.7468	.5789	.2304	.0759	.0530	.0484	.4757	.4544	.3672	.1381	.0345	.0172	.0095	5.333
16.000	64.000	.8500	.7388	.5572	.1975	.0569	.0377	.0339	.4830	.4360	.3261	.1070	.0212	.0079	.0019	10.666
64.000	16.000	.9475	.8018	.5903	.2016	.0569	.0358	.0294	.4852	.4595	.3581	.1168	.0252	.0118	.0064	7.111
64.000	64.000	.9474	.7962	.5631	.1607	.0373	.0217	.0172	.4913	.4338	.3052	.0816	.0131	.0044	.0010	21.333

P XB	P YB	X-00	05	15	50	85	95	100	Y-00	05	15	50	85	95	100	PBX
			$\Lambda = 1$		$N_{ox} = 1$					$\Lambda = 1$		$N_{ox} = 1$				
0.125	0.031	.6838	.6819	.6783	.6689	.6643	.6638	.6638	.3361	.3361	.3360	.3348	.3323	.3314	.3309	0.024
0.125	0.125	.6823	.6804	.6768	.6673	.6625	.6621	.6621	.3378	.3377	.3373	.3326	.3230	.3194	.3175	0.062
0.125	0.500	.6749	.6729	.6693	.6593	.6542	.6537	.6537	.3461	.3458	.3442	.3269	.2932	.2807	.2740	0.100
0.500	0.125	.7276	.7210	.7086	.6751	.6579	.6563	.6561	.3440	.3439	.3435	.3384	.3285	.3248	.3229	0.100
0.500	0.500	.7239	.7171	.7045	.6697	.6512	.6494	.6492	.3507	.3504	.3486	.3302	.2954	.2828	.2760	0.250
0.500	2.000	.7053	.6980	.6843	.6452	.6230	.6207	.6204	.3788	.3779	.3716	.3149	.2220	.1899	.1728	0.400
1.000	1.000	.7683	.7569	.7355	.6739	.6383	.6346	.6341	.3658	.3653	.3616	.3260	.2644	.2429	.2316	0.500
1.000	4.000	.7470	.7343	.7107	.6384	.5938	.5890	.5885	.4115	.4095	.3974	.3052	.1771	.1349	.1128	0.800
2.000	0.500	.8855	.8729	.8528	.7896	.7543	.7476	.7495	.2575	.2560	.2557	.2396	.2160	.2043	.2020	0.400
2.000	2.000	.8301	.8134	.7813	.6835	.6187	.6110	.6100	.3899	.3888	.3812	.3164	.2186	.1865	.1698	1.000
2.000	8.000	.8200	.8021	.7673	.6559	.5784	.5691	.5678	.4316	.4279	.4058	.2800	.1327	.0862	.0618	1.600
8.000	2.000	.9482	.9285	.8909	.7686	.6604	.6432	.6407	.3617	.3612	.3545	.2903	.1941	.1663	.1520	1.600
8.000	8.000	.9420	.9190	.8741	.7202	.5787	.5533	.5490	.4508	.4466	.4212	.2797	.1258	.0809	.0579	4.000
8.000	32.000	.9324	.9057	.8538	.6719	.5042	.4740	.4689	.5269	.5132	.4644	.2819	.0983	.0441	.0160	6.400
			$\Lambda = 1$		$N_{ox} = 2$					$\Lambda = 1$		$N_{ox} = 2$				
0.250	0.062	.6378	.6334	.6253	.6038	.5932	.5922	.5921	.4079	.4079	.4076	.4045	.3985	.3963	.3951	0.049
0.250	0.250	.6344	.6300	.6217	.5995	.5881	.5870	.5869	.4130	.4129	.4118	.4004	.3782	.3699	.3655	0.125
0.250	1.000	.6166	.6118	.6030	.5782	.5643	.5628	.5627	.4370	.4364	.4327	.3956	.3264	.3007	.2867	0.200
1.000	0.250	.7060	.6933	.6665	.5926	.5555	.5514	.5526	.4529	.4544	.4527	.4358	.4112	.4018	.3987	0.200
1.000	1.000	.7158	.7019	.6759	.6016	.5573	.5525	.5519	.4480	.4474	.4426	.3983	.3240	.2979	.2840	0.500
1.000	4.000	.7064	.6919	.6640	.5779	.5206	.5140	.5131	.4864	.4843	.4702	.3691	.2233	.1719	.1440	0.800
2.000	0.500	.7823	.7612	.7223	.6154	.5524	.5451	.5441	.4545	.4541	.4509	.4218	.3741	.3577	.3491	0.400
2.000	2.000	.7873	.7665	.7271	.6082	.5264	.5163	.5156	.4850	.4836	.4735	.3917	.2728	.2334	.2126	1.000
2.000	8.000	.7757	.7533	.7103	.5685	.4633	.4497	.4475	.5520	.5470	.5198	.3674	.1837	.1214	.0873	1.600
4.000	1.000	.8352	.8016	.7432	.5765	.4611	.4420	.4419	.5661	.5636	.5568	.4919	.3937	.3587	.3443	0.800
4.000	4.000	.8639	.8372	.7863	.6221	.4887	.4689	.4659	.5340	.5310	.5112	.3777	.2136	.1627	.1360	2.000
4.000	16.000	.8642	.8372	.7840	.6017	.4483	.4252	.4217	.5779	.5688	.5256	.3398	.1421	.0787	.0443	3.200
16.000	4.000	.9516	.9147	.8473	.6369	.4386	.3927	.3832	.6148	.6107	.5862	.4230	.2286	.1720	.1434	3.200
16.000	16.000	.9597	.9280	.8663	.6525	.4412	.3918	.3814	.6184	.6081	.5587	.3473	.1336	.0719	.0402	8.000
16.000	64.000	.9535	.9171	.8456	.5956	.3484	.2904	.2782	.7182	.6925	.6214	.3714	.1212	.0484	.0104	12.800

P XB	P YB	X-00	05	15	50	85	95	100	Y-00	05	15	50	85	95	100	PBX
			$\Lambda = 1$		$N_{ox} = 4$					$\Lambda = 1$		$N_{ox} = 4$				
0.500	0.125	.6235	.6145	.5980	.5554	.5341	.5322	.5320	.4694	.4694	.4687	.4609	.4468	.4418	.4392	0.100
0.500	0.500	.6247	.6156	.5987	.5526	.5267	.5239	.5236	.4763	.4759	.4732	.4473	.4012	.3843	.3752	0.250
0.500	2.000	.6090	.5994	.5810	.5253	.4885	.4843	.4837	.5157	.5146	.5069	.4423	.3302	.2860	.2610	0.400
2.000	0.500	.7338	.7084	.6630	.5484	.4824	.4744	.4734	.5300	.5295	.5249	.4874	.4304	.4116	.4018	0.400
2.000	2.000	.7548	.7310	.6871	.5565	.4613	.4484	.4466	.5533	.5514	.5386	.4434	.3128	.2688	.2451	1.000
2.000	8.000	.7595	.7357	.6896	.5352	.4104	.3926	.3899	.6097	.6043	.5742	.4164	.2239	.1521	.1104	1.600
4.000	1.000	.8195	.7852	.7256	.5728	.4688	.4534	.4510	.5486	.5473	.5382	.4667	.3689	.3383	.3224	0.800
4.000	4.000	.8384	.8072	.7493	.5666	.4113	.3863	.3823	.6175	.6136	.5886	.4333	.2506	.1927	.1615	2.000
4.000	16.000	.8456	.8152	.7553	.5487	.3647	.3342	.3293	.6703	.6595	.6099	.4021	.1794	.1030	.0587	3.200
8.000	2.000	.8879	.8456	.7731	.5783	.4188	.3884	.3829	.6165	.6138	.5957	.4695	.3134	.2667	.2428	1.600
8.000	8.000	.9069	.8709	.8036	.5796	.3672	.3253	.3177	.6821	.6746	.6327	.4203	.1963	.1290	.0930	4.000
8.000	32.000	.9110	.8758	.8061	.5625	.3290	.2823	.2738	.7259	.7073	.6408	.3971	.1499	.0726	.0289	6.400
32.000	32.000	.9749	.9360	.8600	.5947	.3294	.2571	.2368	.7630	.7428	.6704	.4052	.1398	.0639	.0250	16.000
			$\Lambda = 1$		$N_{ox} = 8$					$\Lambda = 1$		$N_{ox} = 8$				
1.000	0.250	.6411	.6241	.5948	.5263	.4911	.4873	.4867	.5129	.5126	.5101	.4896	.4585	.4482	.4428	0.200
1.000	1.000	.6545	.6379	.6080	.5243	.4673	.4600	.4589	.5410	.5399	.5325	.4756	.3919	.3619	.3453	0.500
1.000	4.000	.6526	.6356	.6030	.4960	.4091	.3964	.3945	.6051	.6022	.5846	.4791	.3289	.2632	.2223	0.800
4.000	1.000	.7800	.7396	.6715	.5224	.4145	.3984	.3963	.6131	.6119	.5934	.5079	.3984	.3709	.3546	0.800
4.000	4.000	.8182	.7838	.7228	.5337	.3641	.3337	.3286	.6713	.6662	.6358	.4662	.2771	.2160	.1817	2.000
4.000	16.000	.8345	.8021	.7391	.5207	.3151	.2764	.2696	.7299	.7176	.6634	.4454	.2144	.1297	.0754	3.200
8.000	2.000	.8601	.8094	.7303	.5380	.3760	.3423	.3360	.6636	.6598	.6361	.4916	.3281	.2800	.2550	1.600
8.000	8.000	.8929	.8526	.7801	.5422	.3118	.2626	.2532	.7467	.7373	.6880	.4577	.2197	.1473	.1070	4.000
8.000	32.000	.9024	.8641	.7887	.5253	.2674	.2108	.1997	.7999	.7789	.7064	.4429	.1763	.0902	.0371	6.400
16.000	4.000	.9238	.8693	.7842	.5521	.3331	.2787	.2663	.7333	.7265	.6875	.4810	.2616	.1983	.1658	3.200
16.000	16.000	.9430	.9002	.8207	.5485	.2776	.2098	.1942	.8056	.7900	.7222	.4514	.1792	.0997	.0569	8.000
16.000	64.000	.9474	.9061	.8238	.5360	.2492	.1769	.1601	.8396	.8097	.7278	.4400	.1518	.0663	.0171	12.800
64.000	64.000	.9857	.9419	.8556	.5538	.2520	.1661	.1347	.8651	.8337	.7478	.4460	.1442	.0580	.0142	32.000

P XB	P YB	X-00	05	15	50	85	95	100	Y-00	05	15	50	85	95	100	PBX
			$\Lambda = 1$		$N_{ox} = 16$					$\Lambda = 1$		$N_{ox} = 16$				
2.000	0.500	.6743	.6448	.6000	.5083	.4503	.4412	.4398	.5599	.5587	.5512	.5009	.4395	.4205	.4105	0.400
2.000	2.000	.7146	.6880	.6428	.5121	.3994	.3799	.3767	.6231	.6199	.6004	.4877	.3571	.3119	.2853	1.000
2.000	8.000	.7364	.7109	.6625	.4971	.3407	.3106	.3053	.6943	.6867	.6495	.4862	.3045	.2255	.1680	1.600
8.000	2.000	.8389	.7825	.7023	.5182	.3562	.3179	.3116	.7124	.7084	.6772	.5184	.3545	.3049	.2807	1.600
8.000	8.000	.8809	.8377	.7637	.5215	.2828	.2270	.2153	.7845	.7728	.7170	.4784	.2361	.1622	.1190	4.000
8.000	32.000	.8982	.8588	.7818	.5127	.2455	.1806	.1663	.8334	.8104	.7354	.4663	.1956	.1075	.0464	6.400
16.000	4.000	.9047	.8413	.7547	.5235	.2997	.2417	.2274	.7723	.7631	.7154	.4961	.2719	.2074	.1738	3.200
16.000	16.000	.9360	.8899	.8074	.5251	.2434	.1696	.1511	.8487	.8302	.7564	.4747	.1925	.1100	.0639	8.000
16.000	64.000	.9443	.9010	.8151	.5146	.2145	.1349	.1143	.8854	.8533	.7677	.4672	.1666	.0771	.0211	12.800
32.000	8.000	.9532	.8919	.8035	.5319	.2620	.1868	.1637	.8359	.8216	.7565	.4884	.2185	.1413	.1018	6.400
32.000	32.000	.9679	.9212	.8333	.5272	.2212	.1357	.1093	.8906	.8641	.7786	.4726	.1665	.0787	.0320	16.000
			$\Lambda = 1$		$N_{ox} = 32$					$\Lambda = 1$		$N_{ox} = 32$				
4.000	1.000	.7231	.6774	.6202	.5029	.4003	.3781	.3738	.6260	.6224	.6026	.5025	.3975	.3663	.3495	0.800
4.000	4.000	.7892	.7522	.6930	.5081	.3275	.2864	.2781	.7218	.7134	.6723	.4917	.3069	.2477	.2106	2.000
4.000	16.000	.8202	.7861	.7212	.4957	.2714	.2162	.2038	.7959	.7794	.7184	.4931	.2651	.1836	.1146	3.200
16.000	4.000	.8984	.8279	.7474	.5178	.2907	.2309	.2132	.8101	.7965	.7425	.5165	.2893	.2255	.1902	3.200
16.000	16.000	.9294	.8813	.7983	.5126	.2272	.1493	.1275	.8724	.8506	.7726	.4871	.2015	.1185	.0705	8.000
16.000	64.000	.9424	.8983	.8114	.5071	.2029	.1188	.0940	.9058	.8720	.7852	.4809	.1766	.0871	.0262	12.800
32.000	8.000	.9419	.8745	.7881	.5144	.2411	.1640	.1387	.8610	.8426	.7705	.4975	.2243	.1461	.1059	6.400
32.000	32.000	.9645	.9158	.8262	.5138	.2015	.1132	.0837	.9162	.8866	.7983	.4859	.1736	.0841	.0354	16.000
64.000	64.000	.9828	.9343	.8409	.5144	.1881	.0949	.0584	.9415	.9050	.8117	.4853	.1589	.0655	.0171	32.000
			$\Lambda = 1$		$N_{ox} = 64$					$\Lambda = 1$		$N_{ox} = 64$				
8.000	2.000	.7868	.7266	.6649	.5019	.3410	.2985	.2877	.7120	.7027	.6624	.5019	.3407	.2940	.2690	1.600
8.000	8.000	.8616	.8170	.7459	.5052	.2649	.2000	.1825	.8174	.7998	.7349	.4945	.2539	.1829	.1382	4.000
8.000	32.000	.8911	.8507	.7726	.4995	.2265	.1506	.1278	.8719	.8442	.7666	.4935	.2203	.1383	.0693	6.400
32.000	8.000	.9318	.8646	.7823	.5066	.2346	.1568	.1309	.8780	.8569	.7809	.5053	.2333	.1551	.1165	6.400
32.000	32.000	.9611	.9114	.8213	.5068	.1925	.1030	.0702	.9296	.8968	.8072	.4928	.1785	.0884	.0388	16.000
64.000	16.000	.9674	.9038	.8150	.5081	.2012	.1136	.0785	.9218	.8922	.8053	.4985	.1916	.1039	.0594	12.800
28.000	32.000	.9858	.9287	.8354	.50[illegible]	.1839	.0910	.0537	.9503	.9151	.8222	.4964	.1707	.0777	.0306	25.600

P XB	P YB	X-00	05	15	50	85	95	100	Y-00	05	15	50	85	95	100	PBX
		$\Lambda = 2$			$N_{ox} = 1$				$\Lambda = 2$			$N_{ox} = 1$				
0.125	0.031	.7631	.7616	.7589	.7518	.7484	.7481	.7480	.5038	.5037	.5036	.5018	.4981	.4967	.4959	0.041
0.125	0.125	.7615	.7600	.7573	.7501	.7465	.7461	.7461	.5076	.5075	.5069	.4999	.4857	.4804	.4775	0.083
0.125	0.500	.7561	.7546	.7518	.7441	.7401	.7397	.7396	.5206	.5203	.5180	.4934	.4443	.4257	.4156	0.111
0.500	0.125	.7966	.7917	.7824	.7572	.7440	.7428	.7426	.5146	.5145	.5138	.5064	.4917	.4862	.4833	0.166
0.500	0.500	.7933	.7883	.7787	.7519	.7371	.7356	.7354	.5290	.5287	.5262	.4998	.4490	.4300	.4198	0.333
0.500	2.000	.7854	.7801	.7699	.7394	.7206	.7186	.7184	.5631	.5621	.5542	.4818	.3514	.3025	.2757	0.444
1.000	0.250	.8311	.8229	.8073	.7635	.7389	.7364	.7361	.5277	.5275	.5261	.5109	.4820	.4714	.4657	0.333
1.000	1.000	.8289	.8204	.8044	.7564	.7266	.7233	.7229	.5541	.5535	.5484	.4992	.4102	.3776	.3601	0.666
1.000	4.000	.8243	.8155	.7984	.7432	.7051	.7006	.7000	.5999	.5978	.5836	.4731	.2940	.2272	.1903	0.888
2.000	0.500	.8776	.8656	.8427	.7745	.7306	.7255	.7248	.5502	.5498	.5467	.5162	.4611	.4413	.4308	0.666
2.000	2.000	.8793	.8673	.8440	.7676	.7111	.7039	.7029	.5940	.5926	.5827	.4967	.3554	.3052	.2781	1.333
2.000	8.000	.8799	.8678	.8435	.7574	.6878	.6786	.6773	.6453	.6412	.6168	.4650	.2447	.1630	.1176	1.777
8.000	2.000	.9612	.9460	.9162	.8131	.7088	.6886	.6852	.6295	.6279	.6165	.5183	.3637	.3112	.2834	2.666
8.000	8.000	.9661	.9526	.9249	.8136	.6841	.6576	.6530	.6938	.6891	.6607	.4848	.2438	.1608	.1158	5.333
8.000	32.000	.9671	.9540	.9264	.8103	.6699	.6407	.6355	.7267	.7148	.6690	.4651	.1890	.0903	.0356	7.111
		$\Lambda = 2$			$N_{ox} = 2$				$\Lambda = 2$			$N_{ox} = 2$				
0.250	0.062	.7422	.7391	.7333	.7178	.7101	.7094	.7093	.5813	.5812	.5808	.5765	.5681	.5649	.5632	0.082
0.250	0.250	.7395	.7363	.7304	.7141	.7053	.7045	.7044	.5911	.5909	.5895	.5741	.5434	.5317	.5253	0.166
0.250	1.000	.7325	.7292	.7229	.7043	.6929	.6917	.6915	.6168	.6163	.6120	.5682	.4788	.4426	.4223	0.222
1.000	0.250	.8036	.7940	.7762	.7271	.6993	.6963	.6959	.6080	.6077	.6059	.5876	.5541	.5419	.5354	0.333
1.000	1.000	.8048	.7952	.7768	.7209	.6836	.6792	.6786	.6426	.6419	.6361	.5818	.4837	.4464	.4258	0.666
1.000	4.000	.8062	.7965	.7774	.7117	.6607	.6541	.6531	.6936	.6915	.6778	.5735	.3838	.3020	.2540	0.888
2.000	0.500	.8550	.8409	.8145	.7380	.6878	.6816	.6808	.6383	.6378	.6339	.5967	.5329	.5102	.4981	0.666
2.000	2.000	.8640	.8505	.8243	.7356	.6635	.6535	.6521	.6957	.6941	.6828	.5893	.4339	.3750	.3421	1.333
2.000	8.000	.8719	.8590	.8326	.7321	.6389	.6250	.6229	.7541	.7501	.7265	.5810	.3391	.2332	.1696	1.777
4.000	1.000	.9105	.8930	.8602	.7574	.6722	.6590	.6570	.6859	.6848	.6770	.6075	.4947	.4553	.4341	1.333
4.000	4.000	.9249	.9099	.8799	.7640	.6423	.6214	.6181	.7637	.7608	.7414	.5999	.3796	.2960	.2485	2.666
4.000	16.000	.9336	.9201	.8913	.7671	.6219	.5952	.5909	.8181	.8111	.7769	.5958	.3049	.1790	.1026	3.555
16.000	4.000	.9799	.9643	.9340	.8153	.6526	.6059	.5957	.8085	.8054	.7848	.6307	.3872	.2989	.2505	5.333
16.000	16.000	.9859	.9746	.9502	.8319	.6378	.5772	.5635	.8729	.8660	.8317	.6357	.3066	.1754	.0999	10.666
16.000	64.000	.9876	.9775	.9549	.8383	.6332	.5663	.5511	.8970	.8843	.8450	.6414	.2760	.1224	.0308	14.222

P XB	P YB	X-00	05	15	50	85	95	100	Y-00	05	15	50	85	95	100	PBX
			$\Lambda = 2$		$N_{ox} = 4$					$\Lambda = 2$		$N_{ox} = 4$				
0.500	0.125	.7457	.7395	.7282	.6985	.6828	.6813	.6811	.6377	.6376	.6365	.6265	.6080	.6012	.5976	0.166
0.500	0.500	.7463	.7400	.7284	.6943	.6729	.6705	.6701	.6596	.6592	.6560	.6257	.5679	.5450	.5322	0.333
0.500	2.000	.7477	.7415	.7292	.6884	.6572	.6531	.6525	.6949	.6939	.6871	.6286	.5028	.4417	.4040	0.444
2.000	0.500	.8377	.8220	.7938	.7150	.6609	.6537	.6526	.6946	.6939	.6889	.6459	.5771	.5528	.5397	0.666
2.000	2.000	.8578	.8438	.8167	.7220	.6354	.6220	.6199	.7600	.7582	.7459	.6519	.4971	.4338	.3965	1.333
2.000	8.000	.8743	.8616	.8354	.7297	.6157	.5956	.5923	.8152	.8113	.7896	.6633	.4352	.3130	.2304	1.777
4.000	1.000	.8984	.8789	.8437	.7374	.6427	.6265	.6239	.7520	.7507	.7410	.6628	.5430	.5008	.4777	1.333
4.000	4.000	.9250	.9101	.8805	.7597	.6145	.5859	.5811	.8376	.8345	.8149	.6788	.4567	.3632	.3063	2.666
4.000	16.000	.9403	.9282	.9017	.7768	.6014	.5624	.5555	.8889	.8828	.8543	.6984	.4109	.2579	.1512	3.555
8.000	2.000	.9498	.9306	.8957	.7744	.6279	.5940	.5877	.8245	.8222	.8067	.6880	.5017	.4337	.3958	2.666
8.000	8.000	.9704	.9586	.9338	.8116	.6108	.5567	.5462	.9074	.9032	.8792	.7202	.4291	.3001	.2197	5.333
8.000	32.000	.9790	.9703	.9501	.8347	.6100	.5423	.5285	.9428	.9359	.9087	.7484	.4024	.2198	.0918	7.111
32.000	8.000	.9936	.9839	.9643	.8609	.6481	.5584	.5301	.9396	.9360	.9150	.7641	.4480	.3065	.2230	10.666
32.000	32.000	.9970	.9921	.9803	.8974	.6666	.5515	.5133	.9732	.9685	.9494	.8114	.4269	.2221	.0910	21.333
			$\Lambda = 2$		$N_{ox} = 8$					$\Lambda = 2$		$N_{ox} = 8$				
1.000	0.250	.7703	.7594	.7401	.6907	.6607	.6570	.6565	.6869	.6865	.6836	.6594	.6214	.6080	.6007	0.333
1.000	1.000	.7875	.7771	.7577	.6952	.6435	.6359	.6347	.7303	.7293	.7221	.6668	.5745	.5350	.5111	0.666
1.000	4.000	.8041	.7943	.7748	.7020	.6290	.6162	.6141	.7716	.7694	.7564	.6796	.5364	.4467	.3805	0.888
4.000	1.000	.8886	.8678	.8324	.7290	.6271	.6073	.6040	.7919	.7901	.7784	.6943	.5735	.5306	.5064	1.333
4.000	4.000	.9273	.9131	.8851	.7661	.6046	.5674	.5607	.8785	.8751	.8553	.7285	.5191	.4229	.3589	2.666
4.000	16.000	.9470	.9362	.9125	.7942	.6019	.5492	.5387	.9225	.9171	.8928	.7602	.5057	.3455	.2095	3.555
8.000	2.000	.9467	.9269	.8931	.7741	.6147	.5732	.5649	.8700	.8673	.8502	.7314	.5456	.4751	.4343	2.666
8.000	8.000	.9753	.9656	.9450	.8325	.6125	.5418	.5266	.9467	.9431	.9234	.7906	.5130	.3740	.2776	5.333
8.000	32.000	.9856	.9796	.9651	.8685	.6277	.5351	.5133	.9733	.9688	.9513	.8332	.5193	.3162	.1398	7.111
16.000	4.000	.9821	.9689	.9450	.8341	.6259	.5503	.5312	.9375	.9344	.9164	.7871	.5339	.4240	.3580	5.333
16.000	16.000	.9945	.9902	.9797	.9009	.6570	.5406	.5084	.9830	.9804	.9676	.8633	.5364	.3433	.2045	10.666
16.000	64.000	.9975	.9953	.9895	.9322	.6869	.5455	.5033	.9932	.9909	.9828	.9035	.5584	.3048	.0874	14.222
64.000	16.000	.9992	.9969	.9914	.9400	.7203	.5736	.5035	.9928	.9913	.9838	.9075	.5811	.3619	.2118	21.333
64.000	64.000	.9998	.9993	.9976	.9721	.7748	.5958	.5006	.9985	.9979	.9951	.9527	.6242	.3240	.0888	42.666

P XB	P YB	X-00	05	15	50	85	95	100	Y-00	05	15	50	85	95	100	PBX
			$\Lambda = 4$		$N_{ox} = 1$					$\Lambda = 4$		$N_{ox} = 1$				
0.125	0.031	.8422	.8412	.8395	.8347	.8324	.8322	.8321	.6712	.6712	.6709	.6686	.6637	.6618	.6608	0.062
0.125	0.125	.8409	.8400	.8382	.8333	.8307	.8305	.8305	.6778	.6777	.6769	.6679	.6493	.6421	.6383	0.100
0.125	0.500	.8369	.8359	.8341	.8287	.8257	.8254	.8253	.6985	.6981	.6955	.6660	.6039	.5792	.5656	0.117
0.500	0.125	.8654	.8621	.8559	.8389	.8298	.8290	.8288	.6844	.6843	.6834	.6738	.6546	.6474	.6435	0.250
0.500	0.500	.8638	.8604	.8541	.8355	.8244	.8233	.8231	.7073	.7070	.7040	.6723	.6082	.5832	.5694	0.400
0.500	2.000	.8607	.8572	.8504	.8286	.8136	.8118	.8116	.7534	.7524	.7448	.6712	.5148	.4473	.4084	0.470
1.000	0.250	.8897	.8843	.8740	.8444	.8269	.8250	.8248	.7006	.7004	.6986	.6795	.6425	.6285	.6210	0.500
1.000	1.000	.8906	.8852	.8747	.8412	.8181	.8154	.8150	.7398	.7391	.7336	.6783	.5693	.5260	.5018	0.800
1.000	4.000	.8920	.8866	.8757	.8368	.8056	.8015	.8009	.7959	.7942	.7821	.6798	.4649	.3669	.3087	0.941
2.000	0.500	.9230	.9154	.9008	.8548	.8223	.8182	.8177	.7290	.7286	.7249	.6883	.6193	.5934	.5794	1.000
2.000	2.000	.9289	.9218	.9074	.8552	.8101	.8038	.8029	.7883	.7870	.7773	.6887	.5194	.4504	.4111	1.600
2.000	8.000	.9190	.9112	.8962	.8391	.7825	.7739	.7726	.8297	.8268	.8088	.6805	.4143	.2866	.2087	1.882
8.000	2.000	.9810	.9735	.9582	.8961	.8149	.7969	.7937	.8249	.8234	.8126	.7136	.5295	.4577	.4175	4.000
8.000	8.000	.9873	.9821	.9706	.9097	.8065	.7808	.7761	.8955	.8923	.8727	.7255	.4266	.2925	.2126	6.400
8.000	32.000	.9687	.9606	.9502	.8931	.7825	.7528	.7473	.9044	.8985	.8741	.7205	.3654	.1875	.0758	7.529
			$\Lambda = 4$		$N_{ox} = 2$					$\Lambda = 4$		$N_{ox} = 2$				
0.250	0.062	.8367	.8347	.8310	.8211	.8160	.8155	.8154	.7381	.7380	.7375	.7323	.7217	.7177	.7155	0.124
0.250	0.250	.8355	.8335	.8297	.8188	.8126	.8120	.8119	.7522	.7520	.7504	.7329	.6963	.6817	.6735	0.200
0.250	1.000	.8331	.8311	.8270	.8143	.8056	.8046	.8044	.7821	.7816	.7778	.7376	.6405	.5952	.5684	0.235
1.000	0.250	.8794	.8735	.8624	.8303	.8104	.8082	.8079	.7682	.7680	.7659	.7449	.7052	.6901	.6818	0.500
1.000	1.000	.8851	.8794	.8682	.8308	.8019	.7981	.7976	.8093	.8086	.8032	.7518	.6451	.5987	.5716	0.800
1.000	4.000	.8922	.8868	.8756	.8331	.7935	.7875	.7866	.8534	.8520	.8429	.7691	.5789	.4691	.3969	0.941
2.000	0.500	.9165	.9083	.8926	.8430	.8051	.8000	.7993	.8025	.8020	.7979	.7584	.6855	.6576	.6421	1.000
2.000	2.000	.9294	.9223	.9078	.8513	.7948	.7859	.7845	.8616	.8603	.8514	.7734	.6115	.5361	.4903	1.600
2.000	8.000	.9400	.9338	.9206	.8609	.7888	.7756	.7735	.9057	.9035	.8903	.7980	.5570	.4045	.2982	1.882
4.000	1.000	.9555	.9467	.9296	.8665	.8002	.7885	.7867	.8531	.8521	.8449	.7790	.6563	.6074	.5797	2.000
4.000	4.000	.9704	.9643	.9512	.8865	.7926	.7731	.7699	.9203	.9184	.9064	.8066	.5821	.4681	.3955	3.200
4.000	16.000	.9740	.9690	.9583	.8972	.7881	.7617	.7570	.9494	.9466	.9324	.8329	.5432	.3475	.2045	3.764
16.000	4.000	.9948	.9907	.9820	.9323	.8163	.7722	.7618	.9525	.9509	.9405	.8431	.5979	.4766	.4020	8.000
16.000	16.000	.9981	.9966	.9926	.9580	.8301	.7691	.7537	.9850	.9834	.9746	.8897	.5638	.3529	.2065	12.800
16.000	64.000	.9969	.9956	.9932	.9669	.8387	.7683	.7497	.9905	.9889	.9825	.9130	.5574	.2839	.0760	15.058

P XB	P YB	X-00	05	15	50	85	95	100	Y-00	05	15	50	85	95	100	PBX
			$\Lambda = 4$		$N_{ox} = 4$					$\Lambda = 4$		$N_{ox} = 4$				
0.500	0.125	.8457	.8420	.8350	.8158	.8049	.8037	.8036	.7855	.7854	.7843	.7730	.7517	.7435	.7391	0.250
0.500	0.500	.8496	.8459	.8388	.8161	.7998	.7978	.7975	.8098	.8094	.8066	.7789	.7191	.6922	.6763	0.400
0.500	2.000	.8552	.8516	.8443	.8181	.7948	.7913	.7908	.8365	.8358	.8313	.7932	.6824	.6103	.5602	0.470
2.000	0.500	.9135	.9051	.8893	.8388	.7959	.7894	.7885	.8458	.8452	.8405	.7997	.7277	.6992	.6829	1.000
2.000	2.000	.9330	.9263	.9126	.8554	.7892	.7772	.7753	.8987	.8974	.8891	.8236	.6835	.6079	.5575	1.600
2.000	8.000	.9454	.9399	.9277	.8702	.7890	.7708	.7676	.9293	.9273	.9163	.8491	.6692	.5163	.3873	1.882
4.000	1.000	.9560	.9475	.9310	.8684	.7927	.7776	.7751	.8994	.8984	.8909	.8276	.7098	.6600	.6304	2.000
4.000	4.000	.9753	.9702	.9591	.8987	.7927	.7663	.7615	.9536	.9521	.9426	.8665	.6759	.5596	.4762	3.200
4.000	16.000	.9836	.9801	.9718	.9188	.8004	.7636	.7562	.9748	.9728	.9634	.8969	.6798	.4781	.2915	3.764
8.000	2.000	.9854	.9797	.9682	.9106	.8004	.7683	.7619	.9521	.9509	.9426	.8681	.6976	.6151	.5634	4.000
8.000	8.000	.9952	.9933	.9883	.9476	.8156	.7643	.7531	.9874	.9863	.9802	.9191	.6867	.5180	.3869	6.400
8.000	32.000	.9974	.9963	.9937	.9649	.8321	.7666	.7506	.9949	.9940	.9901	.9471	.7063	.4535	.2027	7.529
32.000	8.000	.9995	.9989	.9972	.9779	.8649	.7817	.7509	.9962	.9958	.9929	.9532	.7194	.5335	.3962	16.000
32.000	32.000	.9999	.9998	.9996	.9932	.8999	.7949	.7500	.9996	.9995	.9989	.9831	.7534	.4671	.2055	25.600
			$\Lambda = 4$		$N_{ox} = 8$					$\Lambda = 4$		$N_{ox} = 8$				
1.000	0.250	.8709	.8647	.8534	.8205	.7963	.7930	.7925	.8298	.8294	.8266	.8033	.7640	.7487	.7398	0.500
1.000	1.000	.8875	.8819	.8710	.8310	.7914	.7848	.7837	.8649	.8640	.8586	.8187	.7398	.6961	.6663	0.800
1.000	4.000	.8990	.8939	.8834	.8409	.7906	.7799	.7780	.8878	.8863	.8784	.8342	.7351	.6398	.5511	0.941
4.000	1.000	.9572	.9490	.9338	.8739	.7912	.7722	.7688	.9245	.9233	.9155	.8556	.7468	.6982	.6677	2.000
4.000	4.000	.9786	.9742	.9647	.9097	.7983	.7647	.7580	.9679	.9665	.9582	.8968	.7421	.6347	.5451	3.200
4.000	16.000	.9861	.9832	.9761	.9290	.8111	.7653	.7544	.9820	.9803	.9728	.9205	.7650	.5953	.3807	3.764
8.000	2.000	.9877	.9830	.9737	.9221	.8055	.7656	.7569	.9720	.9709	.9639	.9032	.7513	.6705	.6159	4.000
8.000	8.000	.9970	.9957	.9924	.9611	.8313	.7674	.7513	.9943	.9937	.9900	.9509	.7720	.6160	.4698	6.400
8.000	32.000	.9987	.9982	.9965	.9760	.8538	.7742	.7504	.9980	.9976	.9956	.9703	.8072	.5940	.2893	7.529
16.000	4.000	.9983	.9970	.9941	.9666	.8427	.7717	.7513	.9946	.9941	.9909	.9527	.7767	.6501	.5556	8.000
16.000	16.000	.9998	.9997	.9993	.9909	.8851	.7849	.7500	.9996	.9995	.9990	.9864	.8229	.6114	.3853	12.800
16.000	64.000	.9999	.9999	.9998	.9963	.9109	.7974	.7500	.9999	.9999	.9997	.9946	.8630	.6059	.2026	15.058
64.000	16.000	.9999	.9999	.9999	.9981	.9361	.8256	.7500	.9999	.9999	.9998	.9961	.8681	.6375	.3957	32.000
64.000	64.000	.9999	.9999	.9999	.9998	.9681	.8545	.7499	.9999	.9999	.9999	.9996	.9217	.6379	.2054	51.200

P XB	P YB	X-00	05	15	50	85	95	100	Y-00	05	15	50	85	95	100	PBX
			$\Lambda = 4$		$N_{ox} = 16$					$\Lambda = 4$		$N_{ox} = 16$				
2.000	0.500	.9117	.9034	.8891	.8420	.7907	.7805	.7788	.8845	.8835	.8773	.8351	.7715	.7450	.7284	1.000
2.000	2.000	.9387	.9327	.9206	.8673	.7912	.7720	.7682	.9267	.9251	.9162	.8623	.7669	.7060	.6532	1.600
2.000	8.000	.9507	.9457	.9347	.8821	.7972	.7700	.7636	.9452	.9428	.9325	.8785	.7807	.6842	.5409	1.882
8.000	2.000	.9892	.9853	.9776	.9310	.8130	.7660	.7547	.9811	.9800	.9737	.9225	.7869	.7109	.6554	4.000
8.000	8.000	.9977	.9968	.9943	.9685	.8457	.7725	.7508	.9966	.9961	.9935	.9645	.8216	.6901	.5400	6.400
8.000	32.000	.9990	.9986	.9974	.9805	.8692	.7826	.7502	.9988	.9984	.9970	.9784	.8531	.6995	.3786	7.529
16.000	4.000	.9990	.9982	.9965	.9761	.8585	.7773	.7505	.9977	.9974	.9955	.9708	.8266	.7085	.6107	8.000
16.000	16.000	.9999	.9999	.9997	.9950	.9064	.7970	.7500	.9999	.9998	.9996	.9937	.8818	.7070	.4690	12.800
16.000	64.000	.9999	.9999	.9999	.9981	.9312	.8146	.7499	.9999	.9999	.9999	.9976	.9150	.7313	.2891	15.058
32.000	8.000	.9999	.9999	.9998	.9960	.9164	.8062	.7500	.9999	.9999	.9997	.9944	.8832	.7199	.5546	16.000
32.000	32.000	.9999	.9999	.9999	.9997	.9608	.8390	.7499	.9999	.9999	.9999	.9996	.9412	.7406	.3853	25.600
			$\Lambda = 4$		$N_{ox} = 32$					$\Lambda = 4$		$N_{ox} = 32$				
4.000	1.000	.9583	.9509	.9383	.8841	.7963	.7695	.7635	.9455	.9439	.9349	.8802	.7866	.7443	.7141	2.000
4.000	4.000	.9815	.9778	.9699	.9217	.8123	.7675	.7555	.9778	.9762	.9687	.9191	.8037	.7290	.6423	3.200
4.000	16.000	.9879	.9854	.9793	.9376	.8269	.7722	.7533	.9866	.9849	.9786	.9359	.8217	.7373	.5336	3.764
16.000	4.000	.9993	.9988	.9975	.9813	.8713	.7839	.7503	.9987	.9985	.9972	.9791	.8565	.7484	.6516	8.000
16.000	16.000	.9999	.9999	.9998	.9965	.9201	.8089	.7500	.9999	.9999	.9998	.9961	.9101	.7691	.5394	12.800
16.000	64.000	.9999	.9999	.9999	.9986	.9416	.8293	.7499	.9999	.9999	.9999	.9984	.9352	.8003	.3784	15.058
32.000	8.000	.9999	.9999	.9999	.9980	.9328	.8194	.7500	.9999	.9999	.9999	.9975	.9183	.7755	.6103	16.000
32.000	32.000	.9949	.9836	.8885	.9999	.9732	.8595	.7499	.9924	.9812	.8745	.9999	.9665	.8174	.4689	25.600
			$\Lambda = 4$		$N_{ox} = 64$					$\Lambda = 4$		$N_{ox} = 64$				
8.000	2.000	.9905	.9873	.9813	.9406	.8272	.7711	.7530	.9875	.9863	.9806	.9387	.8218	.7568	.7043	4.000
8.000	8.000	.9982	.9975	.9956	.9745	.8642	.7842	.7505	.9979	.9974	.9955	.9737	.8600	.7685	.6381	6.400
8.000	32.000	.9992	.9989	.9979	.9838	.8840	.7973	.7501	.9991	.9989	.9978	.9833	.8809	.7881	.5314	7.529
32.000	8.000	.9999	.9999	.9999	.9987	.9430	.8312	.7499	.9999	.9999	.9999	.9986	.9366	.8105	.6513	16.000

P XB	P YB	X-00	05	15	50	85	95	100	Y-00	05	15	50	85	95	100	PBX
			Λ =8		N_{ox} = 1					Λ = 8		N_{ox} = 1				
0.125	0.031	.9054	.9048	.9038	.9009	.8995	.8993	.8993	.8049	.8049	.8046	.8018	.7960	.7938	.7926	0.083
0.125	0.125	.9047	.9041	.9030	.9000	.8984	.8982	.8982	.8138	.8137	.8128	.8026	.7811	.7727	.7680	0.111
0.125	0.500	.9028	.9022	.9010	.8976	.8955	.8952	.8952	.8379	.8375	.8350	.8064	.7396	.7106	.6941	0.121
0.500	0.125	.9201	.9182	.9145	.9041	.8982	.8976	.8976	.8190	.8189	.8179	.8071	.7850	.7765	.7718	0.333
0.500	0.500	.9205	.9185	.9147	.9029	.8952	.8943	.8942	.8458	.8454	.8426	.8116	.7427	.7135	.6968	0.444
0.500	2.000	.9214	.9194	.9155	.9017	.8909	.8895	.8893	.8853	.8846	.8796	.8261	.6752	.5947	.5442	0.484
1.000	0.250	.9361	.9329	.9269	.9086	.8969	.8956	.8954	.8361	.8359	.8340	.8136	.7721	.7558	.7468	0.666
1.000	1.000	.9394	.9364	.9304	.9094	.8929	.8907	.8904	.8764	.8757	.8711	.8232	.7123	.6617	.6318	0.888
1.000	4.000	.9340	.9308	.9244	.9010	.8790	.8756	.8751	.9057	.9048	.8982	.8357	.6395	.5194	.4395	0.969
2.000	0.500	.9583	.9541	.9460	.9180	.8953	.8923	.8918	.8648	.8643	.8608	.8248	.7509	.7209	.7040	1.333
2.000	2.000	.9654	.9619	.9545	.9236	.8913	.8862	.8854	.9164	.9154	.9087	.8428	.6797	.5974	.5466	1.777
2.000	8.000	.9704	.9673	.9607	.9292	.8889	.8814	.8802	.9498	.9484	.9401	.8707	.6274	.4578	.3377	1.939
8.000	2.000	.9935	.9909	.9852	.9552	.8994	.8846	.8819	.9443	.9434	.9365	.8656	.6895	.6044	.5527	5.333
8.000	8.000	.9973	.9962	.9933	.9702	.9034	.8815	.8772	.9822	.9811	.9744	.9035	.6362	.4608	.3394	7.111
8.000	32.000	.9985	.9979	.9962	.9785	.9085	.8814	.8757	.9932	.9922	.9873	.9318	.6217	.3572	.1507	7.757
			Λ = 8		N_{ox} = 2					Λ = 8		N_{ox} = 2				
0.250	0.062	.9061	.9049	.9028	.8969	.8937	.8934	.8933	.8528	.8528	.8523	.8466	.8348	.8302	.8277	0.166
0.250	0.250	.9062	.9051	.9028	.8962	.8920	.8915	.8914	.8681	.8679	.8664	.8501	.8125	.7961	.7868	0.222
0.250	1.000	.9068	.9057	.9034	.8956	.8895	.8887	.8886	.8907	.8903	.8880	.8612	.7755	.7261	.6943	0.242
1.000	0.250	.9341	.9309	.9247	.9052	.8916	.8900	.8898	.8815	.8813	.8793	.8594	.8185	.8018	.7923	0.666
1.000	1.000	.9407	.9377	.9317	.9093	.8891	.8861	.8857	.9140	.9135	.9098	.8734	.7791	.7286	.6965	0.888
1.000	4.000	.9466	.9439	.9381	.9145	.8884	.8837	.8829	.9360	.9352	.9307	.8950	.7538	.6337	.5405	0.969
2.000	0.500	.9588	.9547	.9466	.9174	.8906	.8866	.8860	.9114	.9109	.9075	.8741	.8042	.7737	.7558	1.333
2.000	2.000	.9689	.9657	.9589	.9279	.8895	.8824	.8813	.9490	.9483	.9433	.8972	.7653	.6833	.6271	1.777
2.000	8.000	.9716	.9688	.9628	.9333	.8881	.8776	.8758	.9633	.9623	.9567	.9174	.7537	.5856	.4399	1.939
4.000	1.000	.9826	.9792	.9719	.9386	.8923	.8829	.8813	.9489	.9482	.9435	.8972	.7884	.7356	.7029	2.666
4.000	4.000	.9909	.9890	.9845	.9555	.8957	.8802	.8773	.9808	.9801	.9754	.9294	.7612	.6359	.5418	3.555
4.000	16.000	.9939	.9927	.9894	.9655	.9015	.8803	.8760	.9904	.9896	.9857	.9519	.7702	.5498	.3361	3.878
16.000	4.000	.9993	.9988	.9975	.9840	.9196	.8847	.8756	.9945	.9941	.9916	.9566	.7782	.6452	.5489	10.666
16.000	16.000	.9999	.9998	.9996	.9947	.9364	.8891	.8750	.9995	.9994	.9988	.9842	.7929	.5565	.3386	14.222
16.000	64.000	.9999	.9999	.9999	.9977	.9473	.8931	.8750	.9999	.9999	.9997	.9932	.8208	.5084	.1505	15.515

P XB	P YB	X-00	05	15	50	85	95	100	Y-00	05	15	50	85	95	100	PBX
			$\Lambda = 8$		$N_{ox} = 4$					$\Lambda = 8$		$N_{ox} = 4$				
0.500	0.125	.9151	.9130	.9091	.8975	.8901	.8892	.8891	.8867	.8866	.8856	.8750	.8535	.8447	.8396	0.333
0.500	0.500	.9196	.9176	.9136	.8999	.8886	.8870	.8868	.9051	.9048	.9029	.8836	.8330	.8050	.7870	0.444
0.500	2.000	.9238	.9219	.9180	.9032	.8883	.8856	.8852	.9179	.9175	.9149	.8962	.8216	.7503	.6918	0.484
2.000	0.500	.9606	.9567	.9490	.9199	.8891	.8838	.8830	.9355	.9350	.9316	.9017	.8395	.8100	.7917	1.333
2.000	2.000	.9718	.9689	.9627	.9331	.8906	.8813	.8797	.9620	.9614	.9570	.9230	.8259	.7511	.6921	1.777
2.000	8.000	.9769	.9746	.9692	.9415	.8944	.8810	.8784	.9727	.9717	.9667	.9368	.8394	.6989	.5377	1.939
4.000	1.000	.9851	.9821	.9759	.9448	.8932	.8809	.8788	.9694	.9689	.9648	.9276	.8357	.7851	.7513	2.666
4.000	4.000	.9928	.9913	.9877	.9627	.9004	.8804	.8764	.9887	.9881	.9847	.9542	.8364	.7245	.6236	3.555
4.000	16.000	.9945	.9935	.9908	.9704	.9079	.8814	.8751	.9930	.9923	.9895	.9661	.8613	.6845	.4396	3.878
8.000	2.000	.9972	.9961	.9936	.9731	.9068	.8814	.8759	.9921	.9917	.9891	.9589	.8414	.7594	.6989	5.333
8.000	8.000	.9994	.9991	.9984	.9881	.9222	.8847	.8751	.9988	.9986	.9977	.9829	.8611	.7050	.5404	7.111
8.000	32.000	.9997	.9996	.9992	.9928	.9341	.8889	.8750	.9996	.9995	.9990	.9905	.8933	.6832	.3357	7.757
32.000	8.000	.9999	.9999	.9999	.9983	.9581	.9012	.8750	.9999	.9999	.9998	.9956	.8889	.7192	.5485	21.333
32.000	32.000	.9999	.9999	.9999	.9998	.9774	.9136	.8749	.9999	.9999	.9999	.9995	.9316	.6982	.3386	28.444
			$\Lambda = 8$		$N_{ox} = 8$					$\Lambda = 8$		$N_{ox} = 8$				
1.000	0.250	.9352	.9321	.9261	.9061	.8883	.8855	.8851	.9186	.9182	.9161	.8982	.8646	.8490	.8393	0.666
1.000	1.000	.9451	.9424	.9368	.9144	.8887	.8836	.8828	.9374	.9369	.9335	.9106	.8576	.8167	.7836	0.888
1.000	4.000	.9502	.9477	.9424	.9200	.8906	.8831	.8816	.9465	.9456	.9412	.9184	.8670	.7886	.6890	0.969
4.000	1.000	.9868	.9843	.9789	.9504	.8958	.8805	.8776	.9788	.9782	.9745	.9434	.8670	.8210	.7871	2.666
4.000	4.000	.9938	.9925	.9894	.9672	.9056	.8815	.8760	.9917	.9912	.9883	.9640	.8803	.7907	.6891	3.555
4.000	16.000	.9957	.9947	.9924	.9738	.9142	.8843	.8756	.9949	.9943	.9918	.9720	.9015	.7857	.5360	3.878
8.000	2.000	.9981	.9973	.9955	.9792	.9135	.8828	.8754	.9961	.9959	.9941	.9738	.8826	.8096	.7485	5.333
8.000	8.000	.9996	.9994	.9989	.9912	.9312	.8881	.8750	.9994	.9993	.9987	.9895	.9093	.7898	.6226	7.111
8.000	32.000	.9998	.9997	.9994	.9943	.9425	.8939	.8750	.9997	.9996	.9993	.9935	.9317	.8012	.4395	7.757
16.000	4.000	.9999	.9998	.9997	.9956	.9424	.8922	.8750	.9998	.9997	.9995	.9934	.9108	.8046	.6981	10.666
16.000	16.000	.9999	.9999	.9999	.9992	.9639	.9029	.8750	.9999	.9999	.9999	.9989	.9458	.8012	.5403	14.222
16.000	64.000	.9999	.9999	.9999	.9997	.9741	.9124	.8749	.9999	.9999	.9999	.9996	.9651	.8264	.3357	15.515

P XB	P YB	X-00	05	15	50	85	95	100	Y-00	05	15	50	85	95	100	PBX
		$\Lambda = 16$			$N_{ox} = 1$				$\Lambda = 16$			$N_{ox} = 1$				
0.125	0.031	.9475	.9472	.9466	.9450	.9442	.9441	.9441	.8938	.8938	.8935	.8905	.8842	.8818	.8804	0.099
0.125	0.125	.9473	.9470	.9463	.9446	.9436	.9435	.9435	.9035	.9034	.9025	.8926	.8703	.8611	.8560	0.117
0.125	0.500	.9336	.9332	.9324	.9302	.9288	.9286	.9286	.9103	.9101	.9083	.8868	.8265	.7964	.7782	0.123
0.500	0.125	.9564	.9553	.9533	.9473	.9437	.9433	.9432	.9073	.9072	.9062	.8956	.8727	.8635	.8583	0.400
0.500	0.500	.9577	.9567	.9546	.9477	.9425	.9419	.9418	.9301	.9298	.9277	.9037	.8406	.8098	.7912	0.470
0.500	2.000	.9584	.9573	.9552	.9475	.9405	.9394	.9393	.9498	.9495	.9472	.9205	.8046	.7209	.6619	0.492
1.000	0.250	.9664	.9648	.9615	.9509	.9434	.9424	.9423	.9223	.9221	.9204	.9020	.8613	.8439	.8339	0.800
1.000	1.000	.9699	.9684	.9652	.9533	.9424	.9408	.9405	.9504	.9500	.9472	.9162	.8229	.7702	.7363	0.941
1.000	4.000	.9726	.9712	.9683	.9560	.9421	.9396	.9391	.9665	.9661	.9634	.9375	.7986	.6724	.5737	0.984
2.000	0.500	.9802	.9782	.9742	.9585	.9435	.9412	.9409	.9447	.9444	.9417	.9134	.8458	.8143	.7956	1.600
2.000	2.000	.9852	.9836	.9803	.9642	.9436	.9397	.9391	.9730	.9725	.9693	.9348	.8091	.7239	.6645	1.882
2.000	8.000	.9872	.9859	.9830	.9681	.9442	.9386	.9376	.9831	.9826	.9797	.9554	.8016	.6251	.4699	1.969
8.000	2.000	.9985	.9979	.9964	.9848	.9513	.9403	.9381	.9891	.9887	.9860	.9517	.8169	.7290	.6690	6.400
8.000	8.000	.9996	.9995	.9990	.9926	.9572	.9411	.9375	.9985	.9983	.9972	.9784	.8110	.6287	.4720	7.529
8.000	32.000	.9998	.9998	.9995	.9956	.9623	.9424	.9375	.9996	.9995	.9991	.9901	.8345	.5581	.2517	7.876
		$\Lambda = 16$			$N_{ox} = 2$				$\Lambda = 16$			$N_{ox} = 2$				
0.250	0.062	.9495	.9489	.9477	.9443	.9424	.9422	.9422	.9242	.9241	.9236	.9181	.9063	.9014	.8987	0.199
0.250	0.250	.9503	.9496	.9484	.9446	.9418	.9415	.9414	.9364	.9363	.9352	.9230	.8897	.8731	.8630	0.235
0.250	1.000	.9482	.9475	.9463	.9419	.9381	.9375	.9374	.9441	.9440	.9429	.9302	.8689	.8212	.7865	0.246
1.000	0.250	.9671	.9655	.9622	.9512	.9422	.9409	.9408	.9468	.9466	.9451	.9295	.8932	.8763	.8661	0.800
1.000	1.000	.9715	.9701	.9671	.9550	.9422	.9400	.9397	.9639	.9636	.9617	.9425	.8744	.8256	.7906	0.941
1.000	4.000	.9738	.9725	.9697	.9577	.9426	.9393	.9387	.9707	.9704	.9682	.9538	.8755	.7671	.6615	0.984
2.000	0.500	.9820	.9802	.9764	.9606	.9430	.9400	.9395	.9665	.9662	.9641	.9421	.8855	.8554	.8362	1.600
2.000	2.000	.9870	.9856	.9826	.9674	.9445	.9394	.9386	.9820	.9817	.9794	.9589	.8741	.7973	.7350	1.882
2.000	8.000	.9890	.9879	.9853	.9715	.9467	.9396	.9381	.9870	.9865	.9841	.9686	.8892	.7442	.5731	1.969
4.000	1.000	.9944	.9932	.9906	.9753	.9465	.9395	.9383	.9864	.9861	.9839	.9600	.8810	.8302	.7948	3.200
4.000	4.000	.9972	.9966	.9951	.9835	.9508	.9399	.9377	.9955	.9952	.9937	.9778	.8830	.7700	.6635	3.764
4.000	16.000	.9979	.9975	.9963	.9870	.9550	.9409	.9375	.9973	.9970	.9958	.9848	.9088	.7301	.4698	3.938
16.000	4.000	.9999	.9999	.9998	.9974	.9684	.9446	.9375	.9997	.9997	.9994	.9924	.8964	.7770	.6685	12.800
16.000	16.000	.9999	.9999	.9999	.9995	.9784	.9486	.9375	.9999	.9999	.9999	.9988	.9273	.7362	.4719	15.058
16.000	64.000	.9999	.9999	.9999	.9998	.9842	.9522	.9375	.9999	.9999	.9999	.9996	.9550	.7328	.2517	15.753

P XB	P YB	X-00	05	15	50	85	95	100	Y-00	05	15	50	85	95	100	PBX
			Λ =16			N_{ox} = 4				Λ =16			N_{ox} = 4			
0.500	0.125	.9564	.9553	.9532	.9465	.9416	.9410	.9409	.9452	.9451	.9443	.9361	.9172	.9084	.9031	0.400
0.500	0.500	.9594	.9584	.9563	.9487	.9416	.9404	.9403	.9549	.9547	.9536	.9432	.9077	.8816	.8627	0.470
0.500	2.000	.9594	.9584	.9564	.9486	.9401	.9383	.9380	.9574	.9571	.9557	.9473	.9083	.8487	.7870	0.492
2.000	0.500	.9836	.9820	.9785	.9633	.9435	.9396	.9389	.9760	.9757	.9738	.9566	.9121	.8846	.8654	1.600
2.000	2.000	.9881	.9869	.9841	.9699	.9459	.9396	.9384	.9854	.9850	.9829	.9676	.9144	.8517	.7895	1.882
2.000	8.000	.9895	.9885	.9860	.9729	.9484	.9399	.9380	.9883	.9878	.9855	.9719	.9312	.8328	.6610	1.969
4.000	1.000	.9955	.9946	.9925	.9790	.9485	.9396	.9379	.9921	.9919	.9902	.9736	.9153	.8704	.8350	3.200
4.000	4.000	.9977	.9972	.9959	.9859	.9538	.9407	.9376	.9968	.9966	.9954	.9841	.9278	.8410	.7342	3.764
4.000	16.000	.9982	.9978	.9968	.9884	.9582	.9422	.9376	.9979	.9976	.9966	.9875	.9471	.8370	.5727	3.938
8.000	2.000	.9996	.9994	.9989	.9930	.9592	.9417	.9375	.9990	.9989	.9984	.9898	.9263	.8576	.7941	6.400
8.000	8.000	.9999	.9998	.9997	.9969	.9678	.9446	.9375	.9998	.9998	.9996	.9961	.9479	.8381	.6633	7.529
8.000	32.000	.9999	.9999	.9998	.9978	.9732	.9476	.9374	.9999	.9999	.9998	.9975	.9655	.8506	.4698	7.876
32.000	8.000	.9999	.9999	.9999	.9999	.9889	.9569	.9374	.9999	.9999	.9999	.9998	.9664	.8484	.6685	25.600
			Λ = 16			N_{ox} = 8				Λ =16			N_{ox} = 8			
1.000	0.250	.9695	.9680	.9651	.9538	.9421	.9400	.9397	.9637	.9635	.9621	.9510	.9269	.9127	.9027	0.800
1.000	1.000	.9738	.9725	.9697	.9581	.9433	.9399	.9392	.9713	.9709	.9690	.9573	.9283	.8954	.8617	0.941
1.000	4.000	.9744	.9731	.9705	.9591	.9435	.9389	.9378	.9731	.9726	.9702	.9587	.9365	.8855	.7869	0.984
4.000	1.000	.9962	.9954	.9936	.9816	.9508	.9401	.9378	.9944	.9942	.9927	.9796	.9361	.8988	.8644	3.200
4.000	4.000	.9979	.9975	.9963	.9872	.9565	.9416	.9376	.9974	.9972	.9961	.9865	.9486	.8894	.7889	3.764
4.000	16.000	.9983	.9979	.9970	.9891	.9603	.9435	.9375	.9981	.9979	.9969	.9887	.9580	.9014	.6607	3.938
8.000	2.000	.9997	.9996	.9993	.9947	.9633	.9431	.9375	.9995	.9994	.9991	.9936	.9501	.8957	.8346	6.400
8.000	8.000	.9999	.9998	.9997	.9974	.9715	.9467	.9375	.9999	.9998	.9997	.9972	.9661	.8967	.7341	7.529
8.000	32.000	.9999	.9999	.9998	.9981	.9757	.9502	.9375	.9999	.9999	.9998	.9979	.9737	.9181	.5727	7.876
16.000	4.000	.9999	.9999	.9999	.9995	.9800	.9501	.9375	.9999	.9999	.9999	.9992	.9693	.8987	.7941	12.800
16.000	16.000	.9999	.9999	.9999	.9998	.9880	.9567	.9374	.9999	.9999	.9999	.9998	.9845	.9127	.6633	15.058
16.000	64.000	.9999	.9999	.9999	.9999	.9909	.9619	.9374	.9999	.9999	.9999	.9999	.9894	.9386	.4698	15.753