UCRL 3934

UNIVERSITY OF CALIFORNIA

Radiation Laboratory

TWO-WEEK LOAN COPY

This is a Library Circulating Copy which may be borrowed for two weeks. For a personal retention copy, call Tech. Info. Division, Ext. 5545

THE ISOLATION OF AMERICIUM - 241 IN 100 - MILLIGRAM QUANTITIES FROM LARGE AMOUNTS OF IMPURITIES

BERKELEY, CALIFORNIA

DISCLAIMER

This document was prepared as an account of work sponsored by the United States Government. While this document is believed to contain correct information, neither the United States Government nor any agency thereof, nor the Regents of the University of California, nor any of their employees, makes any warranty, express or implied, or assumes any legal responsibility for the accuracy, completeness, or usefulness of any information, apparatus, product, or process disclosed, or represents that its use would not infringe privately owned rights. Reference herein to any specific commercial product, process, or service by its trade name, trademark, manufacturer, or otherwise, does not necessarily constitute or imply its endorsement, recommendation, or favoring by the United States Government or any agency thereof, or the Regents of the University of California. The views and opinions of authors expressed herein do not necessarily state or reflect those of the United States Government or any agency thereof or the Regents of the University of California.

UCRL-3934
Chemistry

UNIVERSITY OF CALIFORNIA

Radiation Laboratory
Berkeley, California

Contract No. W-7405-eng-48

THE ISOLATION OF AMERICIUM-241 IN 100-MILLIGRAM QUANTITIES FROM LARGE AMOUNTS OF IMPURITIES

Fritz Weigel

September 1957

Printed for the U. S. Atomic Energy Commission

THE ISOLATION OF AMERICIUM-241 IN 100-MILLIGRAM QUANTITIES FROM LARGE AMOUNTS OF IMPURITIES

Contents

Abstract 3

Introduction 4

Starting Materials 6

Basic Analytical Principles 6

Experimental Procedure 8

Individual Separation Procedures 11

- C-I 11
- C-II 13
- C-III 14
- C-IV 16

Final Purification of the Preconcentrated Americium Samples from C-II to C-IV 17

C-V 20

Physical Properties of Pure Americium Compounds 28

Discussion 28

A. Metathesis of Insoluble Materials 28
1. Lanthanide and Actinide Fluorides 28
2. Organic Materials 29

B. Course of the Americium in the Separation Procedure 29
1. Small Amounts of Americium and Large Quantities of Lanthanum 30
2. Comparable Amounts of Americium and Lanthanum 30
3. Large Amounts of Americium with Small Quantities of Lanthanum 31

Acknowledgments 32

THE ISOLATION OF AMERICIUM-241 IN 100-MILLIGRAM QUANTITIES FROM LARGE AMOUNTS OF IMPURITIES

Fritz Weigel

Radiation Laboratory
University of California
Berkeley, California

September 1957

ABSTRACT

The preparation of pure americium samples on the order of 100 mg is described. The type of processing depends largely on the individual starting material. It is most strongly influenced by the presence of lanthanides--especially lanthanum itself--which are difficult to separate from the americium. The separation procedures used on five different starting materials are described, and the efficiency of some separation methods is discussed in view of personal experience.

THE ISOLATION OF AMERICIUM-241 IN 100-MILLIGRAM QUANTITIES FROM LARGE AMOUNTS OF IMPURITIES

Fritz Weigel*

Radiation Laboratory
University of California
Berkeley, California

September 1957

INTRODUCTION

If plutonium-239 is irradiated in a nuclear reactor, the following chain of reactions takes place, as was shown for the first time by Seaborg, James, and Morgan:[1]

$$Pu^{239}(n, \gamma)\, Pu^{240}(n, \gamma)\, Pu^{241}(\beta^-)\, Am^{241}(\alpha, 458a). \qquad (1)$$

If the irradiation is carried on for a long time, the americium formed is enriched to such a degree that isolation in weighable quantities becomes feasible.

Advantageous for such an isolation attempt is the relatively long half life of Am^{241} (458 years[2]), which is long enough to allow for even more complicated and time-consuming chemical separation procedures. The first isolation of americium from irradiated plutonium was carried out by B. B. Cunningham[3-5] in 1946, and it was shown that trivalent americium

---

*On leave from: Institut für anorganische Chemie der Universitat, München, Germany. Present address: München 2, Arcisstrasse 1, W. - Germany

[1] G. T. Seaborg, R. A. James, and L. O. Morgan, quoted in: G. T. Seaborg and J. J. Katz, The Actinide Elements, National Nuclear Energy Series, Division IV, Vol. 14A (McGraw-Hill, N. Y., 1954), Ch. 13, p. 492.

[2] G. R. Hall and T. L. Marvin, The Alpha Half Life of Americium-241, J. Inorg. Nucl. Chem. 4, 137 (1957).

[3] B. B. Cunningham, The First Isolation of Americium-241 as a Pure Compound. Microchemical Observations on the Chemistry of Americium. The Specific Activity and Half Life of Am^{241}, Univ. of Chicago Metallurgical Lab. Report CC-3876, 1946.

[4] B. B. Cunningham and L. B. Asprey, The First Isolation of Americium in the Form of Pure Compounds. The Specific Alpha-Activity and Half Life of Am^{241}, AECD-2946 (UCRL-810), July 1950.

[5] B. B. Cunningham, The First Isolation of Americium in the Form of Pure Compounds. Microgram Scale Observations on the Chemistry of Americium. In Seaborg, Katz, and Manning, The Transuranium Elements, National Nuclear Energy Series, Division IV, Vol. 14B (McGraw-Hill, New York, 1949), Paper 19.3, p. 1271.

behaves very much like a trivalent lanthanide. Because at that time there was no known method of separating americium from the lanthanides, the irradiated plutonium, which contained considerable amounts of plutonium-241 due to Reaction (1), was carefully purified from lanthanides and other impurities; after some time, when the americium had grown into the plutonium by the beta decay of plutonium-241, it was separated. This method was used in more recent times by British[6, 7] and Canadian[8, 9] workers for the preparation of americium in quantities ranging from the order of a milligram to three quarters of a gram.[9] In the latter work kilogram amounts of irradiated and prepurified plutonium were used as the starting material.

The reaction sequence (1) is not limited to pure plutonium. It occurs just as well in the plutonium that is formed in the fuel elements during the operation of a nuclear reactor. This plutonium also captures neutrons and is transformed to a small extent into Pu^{241} and, hence, Am^{241}. When the fuel elements are processed, the americium formed in this way is carried into the waste solutions of the plutonium recovery, and it may be separated from such wastes.[10-12]

In most cases, the americium occurs in the waste solutions in a highly diluted state and contaminated with large amounts of rare earths. These contaminants--especially lanthanum, which is frequently used as a carrier--make the isolation of the americium from such material a rather arduous and tedious operation. It was possible, though, to concentrate and purify americium from such wastes even on the pilot-plant scale.[10-14]

---

[6] J. Milsted, The Isolation of Americium-241, AERE-C/R-1102, Feb. 1953.

[7] P. D. Herniman, The Separation and Purification of Milligram Quantities of Americium, AERE-C/R-1113, Jan. 1953.

[8] Falavelle, Hanna, Harvey, and Moss, The Preparation of Am^{241}, Chalk River Labs Report CRC-387, Sept. 1948.

[9] J. P. Butler and J. S. Merritt: A Batch Process for the Recovery of Americium-241 from Kilogram Amounts of Plutonium. Report AECL-353 (CRC-661), Aug. 1956.

[10] D. O. Campbell: The Isolation and Purification of Americium, ORNL-1855, April, 1956.

[11] Brooksbank, Matherne, and Whitson, Terminal Report on the Recovery of Plutonium and Americium from Hanford Metallurgical Waste in the ORNL Metal Recovery Plant, ORNL-1850 Feb. 1955 classified report, quoted by Campbell.[10]

[12] R. H. Rainey: Development of the Amex Process for Americium Recovery, ORNL-1697, May 1954 (classified report, quoted by Campbell[10]).

[13] Armstrong, Asprey, Coleman, Keenan, LaMar, and Penneman, Purification of Gram Amounts of Americium, LA-1975, May 1956.

[14] Ion-Exchange Separation of Gram Quantities of Americium from a Kilogram of Lanthanum, A. I. Ch. E. Journal 3, 286-88 (1957).

In this paper, my own experiments and observations on the isolation and purification of americium contaminated with large amounts of rare earths will be reported, and it will be shown by means of practical examples that the basic flow sheet used for such a separation may be varied considerably, depending on the individual starting material.

STARTING MATERIALS

For the experiments to be described, five different americium concentrates were used as starting materials. They will be denominated as C-I to C-V (Concentrate I to Concentrate V).

C-I: 250 ml of a pale green solution. The alpha assay and pulse analysis showed the presence of roughly 150 mg of Pu and about 1.8 mg of Am. The results of a spectrographic analysis of this material are shown in Table I, Column 1.

C-II: 250 ml of pink solution. The alpha assay and pulse analysis showed the presence of about 160 mg of plutonium-239 and 9.8 mg of americium-241. Spectrographic analysis: Table I, Col. 2.

C-III: 1 liter of deep brown solution, crystalline deposit on the bottom of containers. The alpha assay and pulse analysis suggested the presence of approximately 1.6 gr of plutonium and of about 10 mg of americium.

C-IV: dark brown, dry wad of organic material (cellulose) of about 5 cm diameter. Residue from the cleanup of an earlier spill inside a glove box. The strong gamma activity of the sample suggested the presence of larger quantities of americium. The condition of the sample prevented the exact determination of its americium content. The americium content is estimated to be around 3 to 4 mg.

C-V: preconcentrated americium sample. About 70 ml of a pink solution, which was provided by Dr. E. K. Hulet (UCRL, Livermore) and should contain on the order of 100 mg of americium-241. The spectrographic analysis is given in Table I, Column 4. Alpha assay suggested the presence of about 90 mg of americium.

BASIC ANALYTICAL PRINCIPLES

The separation and purification of the americium was carried out according to a general flow sheet, which was modified to meet the requirements of the individual samples. It may be divided into the following steps:

a. Dissolution of acid-insoluble materials; preparation of a solution in hydrochloric or nitric acid.

b. Precipitation of the lanthanides and actinides with HF. In this step, the main bulk of the iron stays in solution.

c. Metathesis of the insoluble actinide-lanthanide fluorides with either 1 M HNO_3 (saturated with boric acid), NaOH, or Na-aluminate solutions. In the latter two cases, the hydroxide formed during the metathesis is washed and dissolved in HNO_3 and tested for the absence of Cl^- and Fe^{3+} ion.

Table I. Spectrographic Analyses. Amounts of impurities (in weight percent) found in various stages of separation processes for isolation of americium-241.

Element	Column 1	2	3	4	5	6	7	8	9	10	11	12	13	14
Al	--	25	0.5	nd	0.7	0.3	0.5	0.03	0.03	10	0.5	10	0.1	0.1
Am	nd	nd(?)	>10 [100]	nd	0.5	1	>10 [100]	>10 [100]	>10 [100]	>10 [100]	>10 [100]	>10 [100]	>10 [100]	>10 [100]
Bi	nd	2	0.5	nd	nd	nd	nd	nd	nd	nd	nd	nd	nd	nd
Ca	0.3	0.5	0.1	0.05	0.2	0.2	0.2	0.07	0.02	0.03	0.03	0.03	0.02	0.03
Ce	nd	nd	--	nd	--	--	--	nd	nd	nd	nd	nd	nd	--
Co	--	--	--	--	nd	nd	nd	--	--	--	--	--	--	--
Cr	nd	nd	nd	nd	0.05	0.3	2	nd	nd	0.05	0.05	0.05	0.05	nd
Eu	--	--	--	--	--	--	--	--	--	nd	nd	nd	nd	nd
Fe	0.1	1.0	1.0	0.1	0.05	0.05	0.2	0.03	0.02	(5)	0.05	0.05	0.1	0.1
Gd	--	--	--	--	--	--	--	--	--	nd	--	nd	nd	nd
La	50 [~50]	< 5 [~50]	>100	nd	50 [~50]	50 [~50]	20	0.03	0.4	0.03	0.03	0.3	0.01	0.3
Li	--	--	--	--	>10	>10	>10	--	--	--	--	--	--	--
Mg	0.05	0.05	0.05	--	0.02	0.04	0.1	0.03	0.03	0.02	0.03	0.02	0.02	0.02
Mn	nd	0.03	nd	nd	nd	nd	nd	nd	nd	nd	nd	nd	nd	nd
Na	nd	nd	>100	--	1	1	1	--	--	--	--	--	nd	--
Nd	--	--	--	--	nd	nd	nd	--	--	--	--	--	--	--
Ni	--	--	nd	--	nd	nd	nd	--	--	nd	nd	nd	nd	nd
Np	nd	--	nd	nd	nd	nd	nd	nd	--	nd	nd	nd	nd	nd
Pb	nd	nd	nd	nd	--	--	--	--	--	nd	nd	nd	nd	nd
Pt	nd	--	--	nd	--	--	--	--	--	--	--	--	--	--
Pu	7	--	--	50 [50]	nd	nd	nd	nd	--	nd	nd	nd	nd	nd
Si	0.1	nd	--	nd	--	--	--	0.05	0.05	0.01	0.02	nd	0.01	0.02
Sn	--	--	--	--	--	--	--	--	--	nd	nd	--	nd	nd
Th	nd	nd	--	nd	--	--	--	nd	--	--	nd	nd	--	nd
Ti	--	--	--	--	--	--	--	nd	--	nd	--	nd	--	--
U	--	--	--	--	nd	nd	nd	nd	--	nd	nd	nd	nd	nd
V	--	--	--	--	nd	nd	nd	--	--	--	--	--	--	--
Yb	--	--	--	--	--	--	--	--	--	0.03	0.05	nd	0.003	0.2
Y	--	--	--	--	--	--	--	0.01	nd	0.02	0.1	nd	nd	0.3
Zn	--	--	--	--	nd	nd	nd	nd	--	nd	nd	nd	--	nd
Zr	0.02	nd	nd	nd	--	--	--	nd	--	--	--	--	--	nd

nd = not detected (i.e., no spectral lines observed)
[ ] = amount of spectral sample (approx.)

MUB-156

d. Separation of the main bulk of the plutonium by precipitation with hydrogen peroxide from dilute nitric acid solution.

e. Concentration of the supernatant from the plutonium precipitation; repeated precipitation of hydroxides; dissolving in HCl or HNO_3.

f. Separation of americium from lanthanum, the method used depending on the Am:La ratio.

In all separation processes the course of the americium may be followed by means of its alpha radioactivity or, more conveniently, by measuring its 59-kev gamma activity.

EXPERIMENTAL PROCEDURE

In practical work with large amounts of americium-241 or plutonium-239 one has to keep in mind that both nuclides have a relatively high specific alpha activity ($1.4 \cdot 10^5$ dpm per microgram Pu^{239}, $7.06 \cdot 10^6$ dpm per microgram Am^{241}), so that the danger of contamination is rather great. Therefore, it is absolutely necessary to carry out all chemical operations employing "open" samples inside an alpha-protection enclosure (gloved box). In general, it is possible to work without large lead shields, but it is advisable to shield vessels containing large quantities of americium with several mm of lead. As a rule of thumb for the required thickness of shields one should remember that the gamma intensity at the working space in front of the gloved box must not exceed 6.25 mr/hr. For measuring the weekly dose received by the working chemist, it is advisable to place x-ray-sensitive photographic films, packed in paraffinated paper, inside the surgical gloves in the palms of the hands, and to wear film badges. For the palm films, the weekly dose should not exceed 300 mr.

The work inside a gloved box requires certain modifications of the chemical techniques (for instance, open flames must not be used inside a gloved box). These are reported elsewhere.[15] It may be pointed out here, however, that if the work is carried out inside a gloved box even very high alpha activities (up to 10^{12} dpm) can be handled without appreciable hazard.

Weak alpha activities were counted in a proportional alpha chamber using 90% Ar + 10% methane as the counting gas, and at an electrode potential of 750 volts. Figure 1 shows the construction of such an alpha chamber. High alpha activities (more than 100,000 cpm) were counted on a low-geometry counter (Fig. 2). This type of measurement may be conveniently used for assay purposes instead of weighing the samples, especially because any weighing on the balance introduces additional contamination hazard unless special precautions are taken.

Small platinum disks of about 2.5 cm diameter and 0.05 mm thickness were used as backing plates. After use, they may be boiled up with HNO_3 and can be used again after having been rinsed carefully.

---

[15] Fritz Weigel, Die Handhabung starker Alpha-Aktivitäten im Laboratorium (The Handling of Strong Alpha Activities in the Laboratory), in preparation.

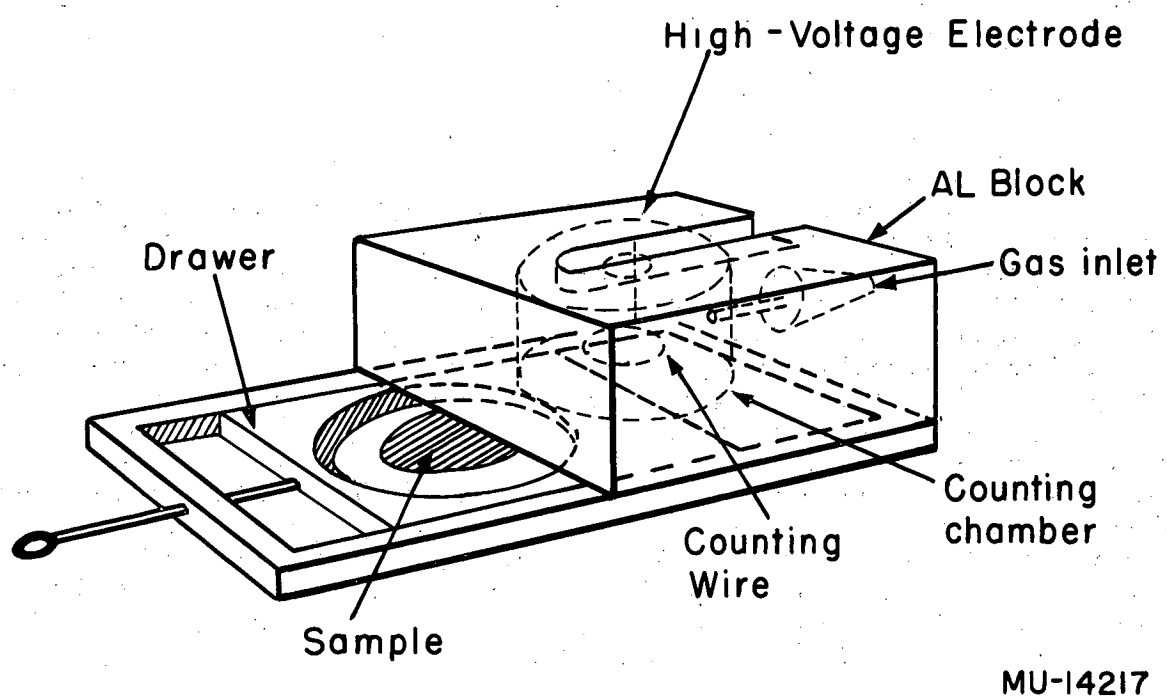

Fig. 1. Alpha proportional chamber (schematic drawing).

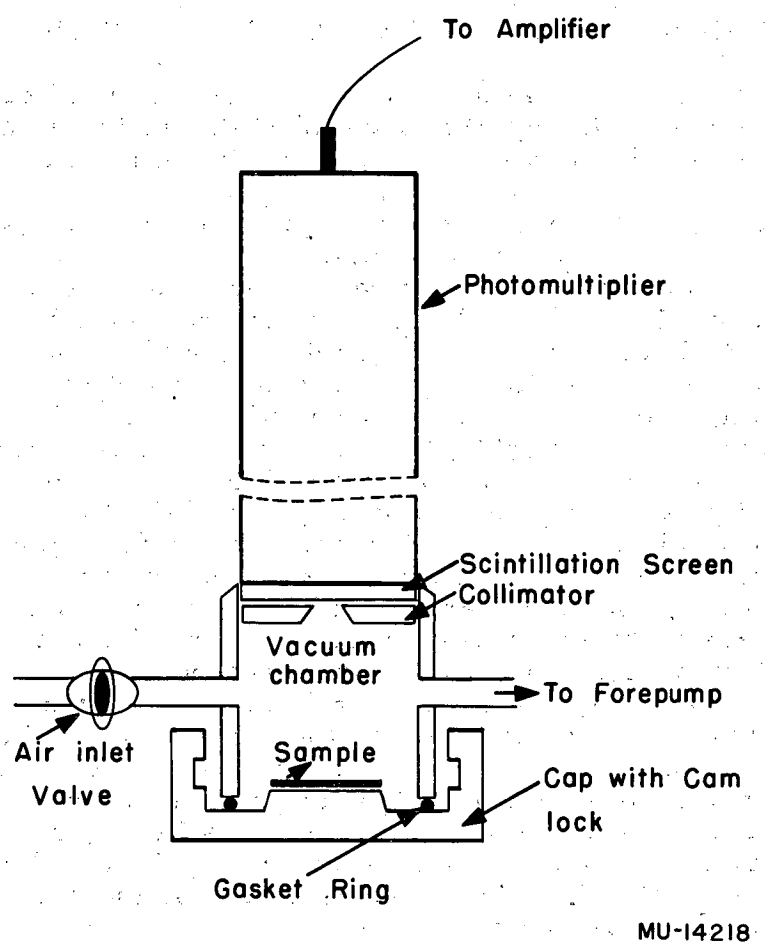

Fig. 2. Low-geometry counter for very high alpha activities (schematic drawing).

The solutions to be measured are applied to the plates by means of a micropipet, evaporated to dryness under the infrared lamp, and "flamed" (ignited) inside an induction coil. The addition of 1 or 2 drops of HNO_3 to the sample on the disk before evaporation helps to destroy chlorides that might volatilize in the flaming process.

INDIVIDUAL SEPARATION PROCEDURES

Because the individual separation procedures used differ greatly from one another (even though they have been derived from a common basic flow sheet) it seems desirable to describe each one in detail.

C-I: The solution was divided into two equal parts, which were processed separately by the following method:

The solution was transferred to a polyethylene beaker and precipitated with aqueous HF (AG, 40%). During the precipitation, the mixture was stirred with a platinum wire. The fluoride precipitate was centrifuged, washed several times with dilute HCl, and then heated several hours under the infrared lamp with a saturated solution of boric acid in 1 M nitric acid, until it had dissolved to a slightly turbid solution. The supernatant that had been collected in the centrifugations of the fluoride precipitate was assayed for alpha-activity and discarded. The solution of the fluorides in nitric-boric acid was precipitated by passing gaseous ammonia through it. The resulting precipitate was washed with water, and an attempt was made to dissolve it again in 6 M nitric acid. However, only part of the precipitate dissolved. There remained a white residue whose properties were those of a rare earth fluoride. This was centrifuged, washed with 1 M nitric acid, and heated with 10 M sodium hydroxide solution under the heat lamp for 2 to 3 hours. The precipitate was then washed with water, extracted with 6 M nitric acid, and centrifuged. Any residue still remaining was treated again in the same manner, until everything had gone into solution. It was found advantageous, in later alkaline metatheses, not to use pure 10 M NaOH, but instead of it a solution containing 20 g of $Al(NO_3)_3 \cdot 9H_2O$ per 100 ml of 10 M NaOH. The times required for the metathesis could thus be shortened by a factor of 3 to 4.

From the combined solutions of all the hydroxide fractions in 6 M HNO_3, the hydroxide was again precipitated by gaseous ammonia, dissolved in a minimum amount of concentrated HNO_3, and fumed almost to dryness. The residue was taken up in distilled water, adjusted to p_H = 1 to 2, and 1/5 of its volume of 30% H_2O_2 added. Plutonium peroxide* precipitated as greyish-green precipitate. After the solution had been allowed to stand for several hours, it was centrifuged and the supernatant was pipetted off. The plutonium peroxide was dissolved in concentrated HNO_3 and, after dilution and adjustment to p_H = 1 to 2, precipitated with H_2O_2. Twice again it was dissolved and precipitated thus. The last peroxide precipitate was dissolved in concentrated HNO_3 and diluted. From this solution, aliquots were withdrawn, plated, and counted. The plutonium fractions isolated by the above procedure from the two aliquots of solution C-1 contained respectively 92 and 88 mg Pu^{239}. They were combined and spectrographically tested for impurities. The results of the spectrographic analysis are given in Table I,

*Actually, this compound is not a "true" peroxide, but a salt of a peroxy cation of varying stoichiometric composition.

Column 4. From the supernatant, which contained all the americium and large amounts of lanthanum, another 22.5 mg of plutonium could be recovered by the same procedure.

Because the ratio Am:La was about 1:5000 in this sample (i.e., 1 mg Am was associated with about 5 g of La) the solvent extraction with a benzene solution of TTA* as suggested by L. B. Werner[16, 17] seemed to be the most promising method. The supernatant from the plutonium separation that contained the americium was precipitated as the hydroxide with NaOH, washed carefully with water to remove interfering impurities (NH_4^+ interferes) and dissolved in a minimum of 1 M HNO_3. This solution was transferred to a separatory funnel and adjusted with 0.05 M NaOH and fractional-range p_H paper adjusted to $p_H = 1.0$. When 15 ml of a 0.2 M solution of TTA in benzene was added, a red coloration formed immediately (iron). The red compound could be extracted completely with four 15-ml portions of TTA solution in benzene (the last portion did not show any red color). Then the p_H was adjusted to $p_H = 3.7$, with 0.05 M NaOH and fractional-range p_H paper. The solution was now extracted with ten 10-ml portions of 0.2 M TTA in benzene. The americium was extracted with about 90% efficiency into the organic phase and could be back-extracted with 1-ml portions of 1 M HNO_3. Table II gives a survey of the distribution of the americium among the various fractions:

Table II

Distribution of the americium in the TTA extraction

Material containing Am	Amount of Am (μg)[a]
Original aqueous solution, prior to extraction	~ 1800
Original aqueous solution after extraction	200
Benzene solution, after back extraction	50
Enriched in nitric acid used for back-extraction	1100
Losses (in washing solutions, supernatants, etc.)	~ 400

[a]Values accurate to within ± 5%

The enriched americium (1173 μg) still was contaminated with about 10 mg of lanthanum. It was freed from organic impurities by repeated precipitation with gaseous ammonia followed by redissolving in 1 M HNO_3, until the

[16]L. B. Werner, The First Isolation of Curium (Thesis) UCRL-156, July 1948.

[17]E. K. Hyde, Radiochemical Separation Methods for the Actinide Elements. Geneva Paper A/Conf. 8/P/728 (1955).

*Thenoyl trifluoro acetone (abbreviated TTA) is a widely used chelating reagent of the formula

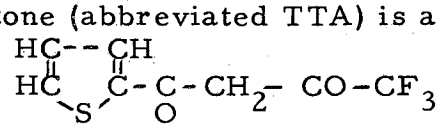

originally yellow color had turned into the pink of Am^{3+}. Because of the relatively small amount of americium present, no further purification was carried out. Instead, the sample was precipitated as the fluoride, dried, and reduced with barium to form an americium-lanthanum alloy.

C-II: Because this sample consisted of residues from earlier experiments with more highly enriched americium containing only small quantities of lanthanum, the recovery of the americium proved to be considerably simpler. In view of the difficulties encountered with C-I, no fluoride precipitation was included. Instead, the material was first precipitated as the hydroxide with NaOH. After the hydroxide was washed and redissolved in concentrated HNO_3, there remained a brown, inactive residue which could be identified by its chemical reactions as MnO_2 hydrate. The supernatant of the MnO_2 hydrate was evaporated to near dryness, taken up in H_2O, and adjusted to p_H = 1 to 2, and the plutonium was precipitated with H_2O_2. The plutonium peroxide was dissolved twice in HNO_3 and each time reprecipitated with H_2O_2. The final H_2O_2 precipitate was dissolved in concentrated HNO_3 and the plutonium content was determined by alpha assay to be 188.5 mg Pu^{239}. This plutonium solution, together with the plutonium samples recovered from C-I, was transferred into another gloved box to prevent recontamination with americium.

The supernatant of the plutonium precipitate, which contained iron, lanthanum, and residual plutonium besides the americium, was precipitated again with NaOH and the hydroxide was dissolved in 1 M HNO_3. The solution was adjusted to p_H = 1 and the iron extracted with 0.2 M TTA solution in benzene. Ten 10-ml portions of TTA solution were used, until the benzene phase did not show any more red color. After the p_H had been adjusted to 2.5 and the solution was again extracted with TTA, the benzene phase showed again a red color. From this latter benzene fraction, a plutonium-containing solution could be recovered by back-extraction with 5M HNO_3. This back-extracted plutonium solution was set aside for later recovery. The red coloration observed in the extraction at p_H = 2.5 was probably due to a plutonium chelate with TTA. After the plutonium had been extracted with ten 10-ml portions of 0.2 M TTA solution in benzene, the p_H was adjusted to 3.7 (fractional-range p_H paper) and again extracted with TTA. With the larger amounts of americium involved here, the extraction proved to be not completely free of interferences, a fact pointed out earlier by Asprey and co-workers.[13] The following reasons seem to be responsible for this behavior:

(a) Because of liberation of acid (i.e., H^+ ions) in the formation of metal chelates, the p_H slowly moves away from its initial value of 3.7 toward p_H = 3.1. At the latter value, no more americium is extracted. It is necessary, therefore, to adjust the p_H constantly by addition of 0.1 M NaOH to keep it in the optimum region between 3.3 and 3.7. (At still higher p_H than 3.7, all the americium, but also part of the lanthanum, is extracted.[16,17])

(b) The chelate complex formed out of TTA and Am^{3+} is only slightly soluble in benzene, insoluble in water. It therefore precipitates as a solid and causes emulsification of the extraction mixture. The separation of the emulsion that is formed by this effect takes a long time.

In spite of these difficulties it was possible to extract all the americium by a total of 20 extractions with 10-ml portions of 0.2 M TTA in benzene. The back-extraction of the benzene phase with twenty 1-ml portions

of 1 M HNO_3 yielded an americium concentrate which was collected in three fractions. These contained the following amounts of americium, according to alpha-assay data:

Table III

Distribution of Am in three fractions of concentrate back-extracted from TTA in benzene

Fraction	Am content (μg)
1	1000 (± 5%)
2	1300 "
3	9600 "
Total	11800 "

These three americium fractions were combined and transferred to a different gloved box for the final purification. The americium balance (Table IV) gives a survey of the efficiency of the separation methods used.

Table IV

Americium balance of C-II

History	Amount of Am[a] (μg)
Separated and concentrated	11800
Remained in aqueous phase	200
Remained in benzene phase	100
Remained in 1880 ml alkaline waste	200
Yield from these data: 95.6%	

[a] Accurate to within ± 5%

C-III: This sample, which consisted of about 1 liter of a dark brown solution, was concentrated by evaporation under the heat lamp to a volume of 250 ml. In this process, the color changed to green and a crystalline deposit was formed. When the solution was diluted, this deposit remained undissolved as a white, crystalline solid, which could be washed free from activity with a small amount of distilled water, and could be identified as boric acid. This boric acid originated from earlier separation procedures, in which a precipitated fluoride was dissolved in a saturated solution of boric acid in 1 M HNO_3. The boric acid was dissolved in a larger quantity of distilled water, and there remained a gelatinous residue of silica, which

probably had been dissolved from the glass vessels by the action of the fluoride-containing solution. (The two original beakers in which the starting solution had been stored for several months showed deep etching marks.) The nitric acid solution that was decanted off the boric acid precipitate and combined with the washing solutions contained the total alpha activity. It was combined with the solution of C-IV and precipitated as the hydroxide, with gaseous ammonia. About 500 ml of a pea-green precipitate was formed. This was washed several times with water and digested with 10 M NaOH under the heat lamp to remove Al and Cr. The hydroxide was then centrifuged, washed several times with water, and dissolved in a minimum of concentrated HNO_3. After dilution to an acid concentration of 0.1 M, it was precipitated with H_2O_2. The plutonium peroxide formed was dissolved in concentrated HNO_3, precipitated with H_2O_2, dissolved again in concentrated HNO_3, and diluted to 9.1 ml. The plutonium content of this solution was determined by alpha assay to be 736 mg. The supernatant of the first plutonium precipitation, which contained considerable amounts of iron, lanthanum, and more plutonium besides all the americium, was concentrated under the heat lamp and precipitated with NH_3 gas. The precipitate was washed with water and dissolved in a minimum of concentrated HCl. A gelatinous inactive residue remained behind (silica). The supernatant was evaporated to near dryness with concentrated HCl several times, to remove most of the silica. The residue was taken up in 8 M HCl, the precipitated silica centrifuged off and the supernatant solution was loaded onto the top of an anion-exchange column (Dowex A-1, 200 to 400 mesh, sedimentation velocity $>$ 1 cm/min; resin bed: 2 cm diameter, 20 cm length) and washed with several volumes of 8 M HCl. When the solution was loaded onto the column, more silica precipitated, which tended to obstruct the flow of the liquid and had to be removed from time to time. This could be done without loss of activity, after the active solution had been washed down a few cm through the column. Iron and plutonium collected at the top of the resin bed as a reddish-brown band, while americium and lanthanum passed through the column. The Am-La solution collected at the bottom of the column showed a purple color which, as was found out later, turned out to be chromium carried along together with the americium and lanthanum. After complete elution of the Am-La fraction, the iron was stripped off with 8 M HNO_3 as the elutriant. The iron moved down the column as a bright yellow band, while the plutonium stayed behind at the top of the column, forming an emerald-green band. After complete removal of the iron, the plutonium was stripped off with 0.1 M HCl, precipitated with gaseous NH_3, and the yellowish-green $Pu(OH)_4$ dissolved in HNO_3. The plutonium content was determined by alpha assay: 556 mg Pu^{239}. This and the previously isolated plutonium fraction of 736 mg were pipetted into two graduated 15-ml centrifuge cones and transferred to another gloved box for storage together with the plutonium samples isolated from C-I and C-II.

A rough estimate of the lanthanum content in the americium fraction from the volume of the hydroxide precipitate had shown the presence of about 10 g of lanthanum together with the americium. The Am-La fraction therefore had to be enriched by TTA extraction in the previously described manner. The extraction proved to be easier inasmuch as iron was absent (it had been removed on the anion column), but on the other hand more difficult than the extraction of C-I and C-II because of the larger bulk of material involved.

Twenty 25-ml portions of 0.2 M TTA in benzene were used for the extraction; the p_H was adjusted to 3.7 as described in the previous sections. In the first five extractions, the whole mixture turned into a semisolid slurry which could be centrifuged and separated into three layers: an organic and an aqueous layer, and a solid layer interposed between the other two. The three phases could be separated mechanically by pipetting off the two liquids, because the solid layer formed a compact cake which did not break apart even after it was punctured by the pipet used for withdrawal of the aqueous layer on the bottom. The solid phase proved to contain the major part of the activity. It dissolved easily in concentrated HNO_3. The solid layers of the first five extractions were combined with one another, also the organic layers up to the tenth extraction were combined with one another. From these, the activity could be back-extracted as usual with small portions of 1 M HNO_3. The organic layers of the second group of ten extractions were also combined with one another and the americium back-extracted with 1 M HNO_3. The assay of the various final concentrates gave the values listed in Table V. Table VI gives the americium balance of the concentrates C-III and C-IV.

C-IV: The recovery of the americium in the cellulose denominated as C-IV proved to be a very unpleasant task, because large quantities of organic material had to be destroyed. Wet-ashing methods only could be applied, because it is not possible to ignite organic material over an open flame inside a gloved box.

The organic material was therefore heated for some time under the infrared lamp with concentrated sulfuric acid, until the acid started to fume. The resulting black suspension was heated alternately with concentrated HNO_3 and H_2O_2 until it became clear. The resulting solution was deep red, and turned yellow when diluted. It proved impossible to precipitate the americium from this solution as the hydroxide. When ammonia was passed into the solution, a deep brown colloidal material formed, which did not precipitate, even after prolonged heating and centrifuging. It seems that residual organic materials had led to formation of complexes. It was possible, however, to precipitate the americium activity as the fluoride. The amount of fluoride precipitate formed upon addition of HF suggested the presence of considerable amounts of lanthanum. Part of this fluoride precipitate could be metathesized to the hydroxide by use of the sodium aluminate reagent described earlier. The hydroxide thus formed was dissolved in HNO_3 and added to C-III for further processing. The insoluble residue, which retained only a small fraction of the americium, was combined with other americium residues for later recovery.

Table V

Americium content of final concentrates of C-III and C-IV

Fraction No.	Where found	Am content (μg)
1	Organic layer, extractions 1-10	7500 ± 5%
2	" " " 11-20	4400 "
3	Combined solid layers, dissolved in HNO_3	8200 "

Table VI

Total americium balance in C-III and C-IV

State of distribution of Am-containing material	Am content (μg)
Separated and concentrated	19100 ± 5%
Remained in 270 ml aqueous phase	200 "
Remained in 540 ml acid waste	300 "
Remained in 1035 ml benzene waste	30 "
Remained in 9115 ml alkaline waste	500 "
Total losses (sum of items 2 to 5)	1030 "

Yield: 94.8%

(This does not include those parts of the americium which were not dissolved in the destruction of the organic matter of C-III and were added to other residues)

The three americium fractions listed in Table V were transferred into another glove box and added to the material recovered from C-II for further processing.

Final Purification of the Preconcentrated Americium Samples from C-II to C-IV

The americium fractions recovered by means of the separation procedures described above still contained a considerable amount of lanthanum, according to the spectrographic data in Table I. Besides the lanthanum, many other impurities were present in trace quantities, so that the americium had to undergo a purification procedure.

This purification is much simpler than the one previously described, because the starting materials are fairly concentrated in americium, so that conventional analytical methods may be employed. On the other hand, owing to the absence of bulk impurities, concentrated samples show much less self-shielding for the gamma radiation of americium. For this reason the work was carried out behind a light lead shield whenever possible. Samples that were temporarily not in processing were placed in holes drilled into a lead brick.

For the separation of americium from the residual lanthanum, the frequently used lithium chloride method suggested for the first time by W. W. T. Crane[18] appeared to be useful. In this method, the solution of the chlorides of lanthanum and americium is evaporated to near dryness, taken up into 12.5 M LiCl solution, and put through a Dowex A-1 anion-exchange column, which had previously been saturated with 12.5 M LiCl. Americium, which seems to form an anion complex of the type $[AmCl_{3+x}]^{x-}$ under these

conditions, remains on the column, while the lanthanum may be eluted with 12.5 M LiCl solution. After removal of the lanthanum, the americium may be stripped off the column with dilute HCl and may thus be obtained almost free of lanthanum.[19]

In this work, all end fractions obtained during the concentration procedures described above, totaling approximately 30 mg of americium, were combined, evaporated to near dryness, and dissolved in 12.5 M LiCl solution. The resulting solution was loaded onto the top of a Dowex A-1 column and eluted with 12.5 M LiCl. The americium collected at the top of the column as a yellow band, which glowed with an orange-red light in the dark. After removal of the lanthanum, the americium was stripped with 1 M HCl from the column and collected in three fractions whose spectrographic analyses are given in Columns 5, 6, and 7 of Table I. As one can see, there is still some lanthanum associated with the americium. This may be explained by the fact that the lanthanum peak, which moves ahead of the americium on the column, forms an elution "tail" which spreads back over the entire column far enough to cut across the main peak of the americium. The americium fraction coming out of the column showed the same peculiar purple color as was observed in one of the earlier concentrates. On heating, the color changed reversibly into green. The material causing this purple or green color could be identified as Cr(III) that had accompanied the americium in the separation process. The presence of chromium is not surprising, though, if one considers that a large part of the early chemical processing on the reactor fuel elements is carried out in vessels made out of stainless steel. The chromium could easily be separated from the americium by adding 1 to 2 drops of 30% H_2O_2 to the Cr-containing Am solution and pipetting the Am solution into 10 M NaOH. Cr is oxidized to chromate, which stays in solution, while the Am precipitates as the hydroxide. The $Am(OH)_3$, which was centrifuged and washed carefully with water, dissolved easily in concentrated HCl and showed for the first time in the course of the separation the yellowish-pink color of the Am^{3+} ion, and the absorption spectrum of Am^{3+}, which is characterized by a sharp, intense line in the green part of the visible spectrum.

At this point, the removal of the lanthanum still present did not make any more difficulties. For this, the americium solution was again evaporated to near dryness, and the residue dissolved in low-conductivity water. This solution was loaded onto the top of a Dowex-50 cation-exchange column (1.5 cm diam, 20 cm length, 12% cross linking, 200 to 400 mesh) and eluted with 13 M alcoholic HCl (80 vol% H_2O, 20 vol% ethanol, saturated in the cold with HCl gas). The americium started coming off the column after the third column volume, and was collected in several fractions of 10 ml each. These fractions were combined into two groups and spectrographically analyzed. The first of the two fractions proved to be a rather pure Am fraction (purity about 99.7%), the second consisted of about 99.5% pure americium with 0.4% lanthanum. The spectrographic results are given in Columns 8 and 9, Table I. The first fraction was precipitated with gaseous NH_3, washed several times with dilute aqueous ammonia, and dried slowly under the infrared lamp until all the ammonia had been removed. After addition of some residues of very pure americium from earlier separations, the hydroxide was dissolved in spectroscopically pure HCl and transferred to a shielded vessel (Fig. 3) for

[18] W. W. T. Crane (UCRL Livermore), private communication to L. B. Asprey, quoted in Ref. 13.

[19] T. C. Parsons (UCRL Berkeley), private communication to F. Weigel.

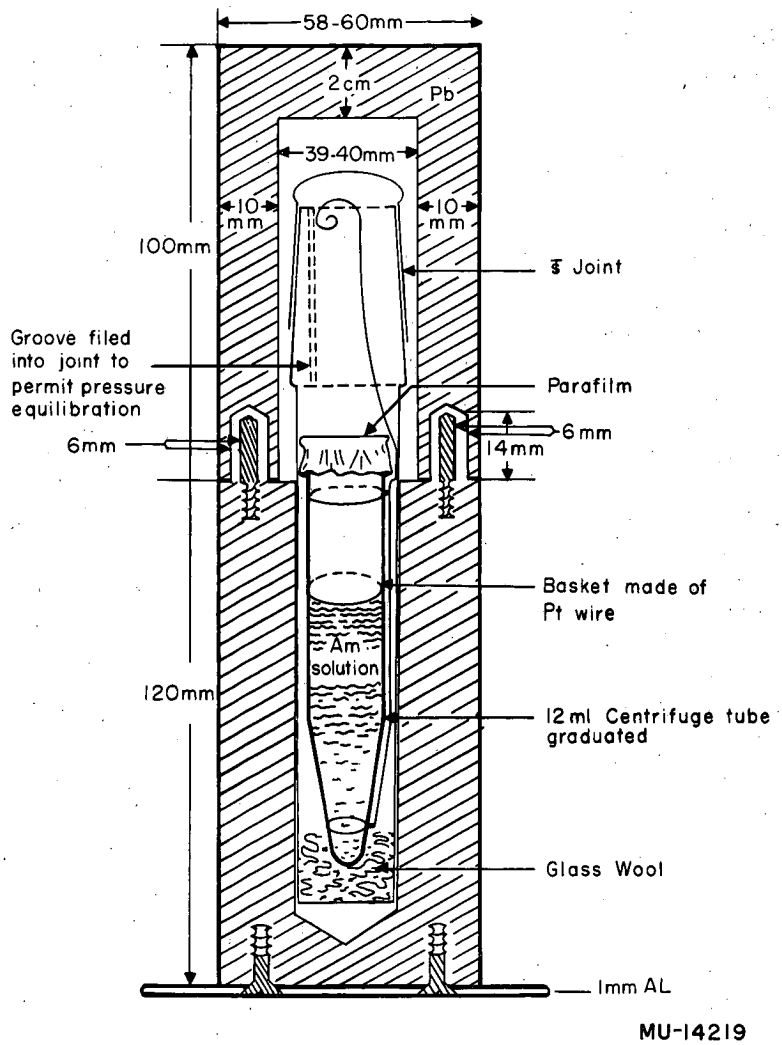

Fig. 3. Storage vessel for large open americium samples.

storage. The second fraction was treated in the same manner, dissolved in HCl, and--after the addition of 3 mg of the pure stock--was precipitated as the fluoride and reduced to the metal. The resulting americium metal was submitted to Dr. J. C. Hubbs for atomic-beam research. The americium balance for the entire final purification is compiled in Table VII.

Table VII

Americium balance for the final purification of combined fractions[a]

Process fraction	Am content (μg)
Starting material (sum of individual concentrates):	31900
Main fraction (99.7% Am):	21600
Tail fraction (99.4% Am):	7700
Sum of (3) and (4):	29400
Losses in column washings:	1700
Total yield: 92.3% of starting material	
Accountable losses: 5.4%	
Unaccountable losses (residues in bottles, counting errors, etc.): 2.3%	

[a] All values obtained by α-assay and accurate to ~ ± 5%.

C-V: This sample was submitted to me by the courtesy of Dr. E. K. Hulet (UCRL Livermore) for the recovery of the americium. According to his communication, it should contain about 100 mg of americium, associated with about 3 to 4 times as much lanthanum and traces of other impurities. The results of the spectrographic analysis are shown in Column 3, Table I.

On the basis of the experience gained in the final purification of the combined concentrates of C-II, C-III, and C-IV, and for reasons to be outlined in the discussion, the direct lanthanum-americium separation on a cation-exchange column, using alcoholic HCl as elutriant, appeared to be most promising.

A tentative experiment on a column of 2 cm diameter and 25 cm length (Dowex-50, 12% cross linking, 200 to 400 mesh) in which the material was initially absorbed and afterwards eluted with 13 M HCl did not show any separation effect. This could be for any of three reasons:

(a) The resin used in the column was of inferior quality and did not possess the capacity listed on the label of the bottle, which should have been sufficient for a separation in this case.

(b) The americium and lanthanum were present as complexes from previous concentration steps. Such complexes might interfere with or completely prevent the column separation.

(c) The column was too small, so that the material spread over too large a part of the resin bed. In such a case, the residual free volume would be too small for efficient separation.

To elminate possible reason (a), another resin was used, whose quality was guaranteed, and whose capacity and other constants were determined prior to the actual experiments (Table VIII). Possibility (b) could be eliminated by first concentrating the recovered solution from the first separation attempt, and by fuming this solution several times to dryness with concentrated HNO_3 and H_2O_2. During this operation, some foaming and brown discoloration occurred, as is typical in the destruction of organic materials by wet ashing. Therefore it seems that organic materials that could have caused complex formation actually were present. To check the third possible reason, (c), an aliquot of 200 λ was pipetted out of the total solution, which had been concentrated to a volume of 10 ml. The aliquot was diluted to 5 ml, precipitated with NH_3 gas, and centrifuged for one minute. The volume of a hydroxide precipitate formed under these conditions may be used as a rough measure of the amount of lanthanum present. A previous calibration with known amounts of lanthanum gave a conversion factor of 10 mg La = 1 ml of hydroxide precipitate, if gaseous NH_3 was used as the precipitating reagent and if the centrifugation time was one minute. In this work, 4 ml of precipitate was obtained, corresponding to 40 mg of La in the 200-λ aliquot or 2 g of La in the total sample. (The americium content may be neglected, because the 100 mg Am corresponded to about 5% of the total amount of La present, whereas the accuracy of the method does not exceed about 10%.) The large amount of lanthanum is contrary to what had been expected, and corresponded to about one half of the column volume in the unsuccessful separation attempt. Therefore, it is not surprising that no separation was achieved. For a successful separation, the column should not be loaded to more than 10% of its total length.

To check these considerations, a small column was constructed as a preliminary experiment. Data for its operation are compiled in Table VIII. A 100-λ portion of the concentrated Am-La solution (corresponding to about 1 mg Am and 20 mg of La) was placed on top of this column and allowed to absorb. The absorbed band had a length of about 1 cm. It was eluted in the usual manner with alcoholic HCl, and all together 20 fractions of 1.5 ml each were collected. A spectrographic analysis of each fraction showed that the americium coming off in the third to fifth column volume was nearly free of lanthanum. The lanthanum began to increase after the fifth column volume, and reached its maximum after the tenth column volume. The americium, at this point, had come off to about 50%. This behavior suggested that the separation itself was working, but that the column capacity was still insufficient. The main batch, consequently, was processed on a column which was dimensioned so that the abosrbed Am-La mixture should not occupy more than 1/10 of the resin bed right after loading. Column 2 of Table VIII gives the dimensions of the resin bed.

The large column was washed with alcoholic HCl until the effluent coming off at the bottom of the resin bed was no longer of a yellow color. Then the column was washed with conductivity water until the HCl had been removed. The washing with water caused the resin bed to swell by about 1/6 of its initial volume. At this stage, the column was introduced into the gloved box.

Table VIII

Operating data for preliminary and main experiment in the purification of C-V

Column	1	2
Experiment	preliminary	main separation
Resin	Dowex 50 "AG, Bio-Rad-Lab"	Dowex 50 "AG, Bio-Rad-Lab"
Grain size	200 to 400 mesh (finest and coursest parts removed)	200 to 400 mesh (finest and coursest parts removed)
Cross linking	12%	12%
Capacity	5 meq per gram (guaranteed)	5 meq per gram (guaranteed)
Sifting volume	1.3 cm^3 per g	1.3 cm^3 per g
True volume	0.7 cm^3 per g	0.7 cm^3 per g
Free interspace volume	0.6 cm^3 per g	0.6 cm^3 per g
Length of resin bed	70 mm[a]	240 mm[a]
Diameter	6 mm	45 mm
Volume of resin bed	2.0 cm^3	397 cm^3
Free-column volume	1.2 cm^3	182 cm^3
Flow rate for alcoholic HCl	not determined	0.229 cm^3 per cm^2 per min.

[a]This value applies to resin submerged in alcoholic HCl. When treated with water, the resin expands by about 1/6 of these values.

The Am-La mixture was picked up on 30 g of the same resin as that comprising the column, and was slurried on top of the column. It was then eluted with a total of 3.5 liters of alcoholic HCl, which was supplied through a Tygon tube from a separatory funnel in the manner shown in Fig. 4. As soon as the activity started to break through in the effluent, 80 individual fractions of 40 ml each were collected in graduated centrifuge cones. In each fraction, the gamma activity was measured; in important points, the alpha activity was determined, too, and an alpha-pulse analysis was carried out. The elution curve constructed from these data is shown in Fig. 5. The apparent "fine structure" in this curve has no significance. It is due to inaccuracies caused by faulty pipetting or counting. The small peak moving in front of the main americium peak proved upon alpha-pulse analysis to contain mainly plutonium-239. In subsequent purification steps, a small

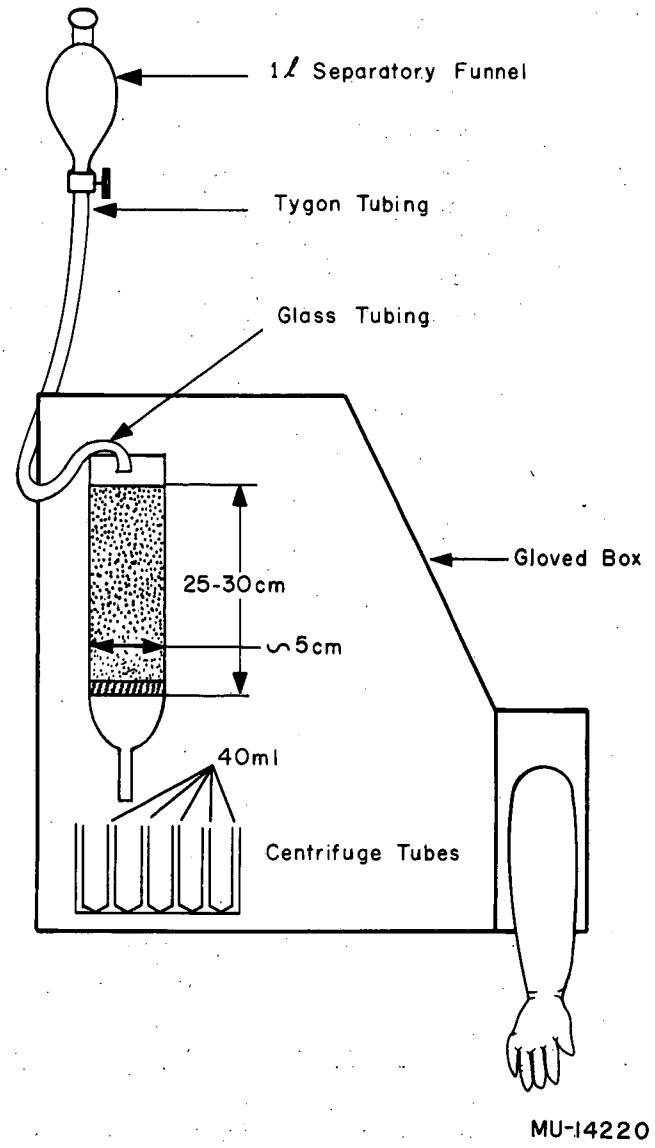

Fig. 4. Setup of large ion-exchange column for liter amounts of elutriant inside gloved box.

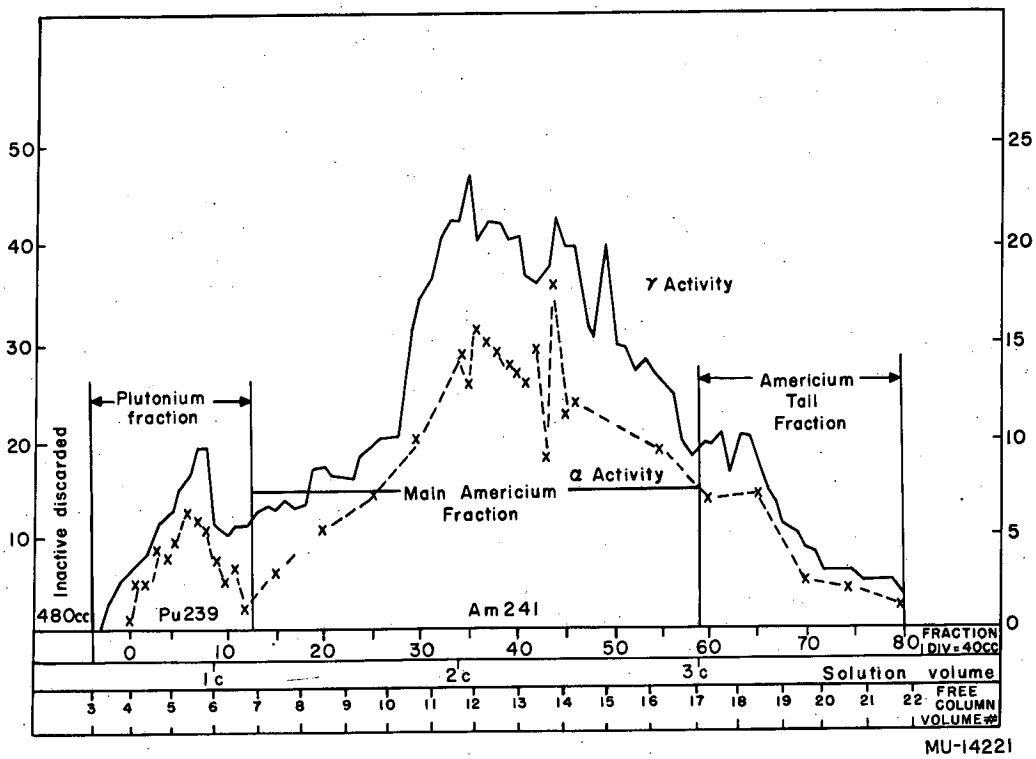

Fig. 5. Elution curve for a large americium sample.
Eluant: 13 M HCl, 20% C_2H_5OH.

x - x - x - x α activity in units of 1.06×10^9 dpm per fraction (1μg Am^{241} = $7.06 \cdot 10^6$ dpm).

——————— γ activity in mr/hr.

amount of Pu was recovered from this and combined with other plutonium residues for further recovery. It was not assayed and could be estimated to be around 20 mg.

Spectrographic analyses taken at various points showed the total of the eluted americium to be essentially free of lanthanum. Even the last fraction collected separately (No. 80) was shown to be free of lanthanum. Thus, the only problem still to be solved was the concentration of the americium from roughly 3 liters of strong HCl solution, and the final purification of the americium from traces of other impurities.

The concentration of the americium from the HCl solution proved to be the most difficult part of the whole procedure. It was achieved by evaporating the total solution (the 40-ml fractions had been combined to form three major batches in the manner indicated by Fig. 5) to a volume of about 150 ml (50 ml each batch), and precipitation of the americium from the concentrated solutions with gaseous NH_3. The evaporation, in which large quantities of corrosive HCl fumes were formed, was carried out under the heat lamp, using the setup shown in Fig. 6. In this exhaust system, the fumes were removed directly from the gloved box. Despite this precaution, all metal parts inside the glove box became badly corroded, so that considerable amounts of iron and aluminum were found in the end product. The americium precipitated from the solutions with NH_3 was allowed to stand for about 1 hour under the heat lamp and was then centrifuged. The hydroxides of the main americium fraction and the "plutonium fraction" (Fig. 5) were combined and worked up together, the tail fraction was processed separately.

The hydroxides were dissolved in 8 M HCl and placed on the top of an anion-exchange column (Dowex A-1 "AG, Bio-Rad-Lab", 200 to 400 mesh, 25 cm in length, 16 mm diameter, pretreated with 13 M HCl). Iron and plutonium were retained on the column, while americium and lanthanum washed through the column and could be eluted completely by washing with 8 M HCl. The iron was removed from the column with 8 M HNO_3, and then the plutonium was stripped off by elution with 0.1 M HCl. The plutonium was precipitated with NaOH, dissolved into a small amount of 8 M HNO_3, and transferred to another gloved box for later recovery. Estimated amount: 20 mg. The two americium fractions, which were processed successively on the same anion-exchange column, were precipitated with gaseous NH_3, centrifuged, and washed several times with dilute aqueous NH_3. Finally, the hydroxides were dissolved in spectrographically pure HCl and transferred to another gloved box to prevent cross-contamination with iron from the corroded metal parts of the old gloved box. A spectrographic analysis taken at this point gave the results compiled in Columns 11 and 12 of Table I. These results suggested that the purification process should be continued to remove Fe and Al, and to decrease the amount of La still present. The aluminum was removed by precipitating the hydroxides with 10 M NaOH, washing several times with water, dissolving the hydroxides in spectrographically pure HCl, and precipitating again with NH_3 gas. The resulting hydroxides were again dissolved in spectrographically pure HCl, and combined. They were first passed through a cation-exchange column (Dowex 50, 200 to 400 mesh, AG "Bio-Rad-Lab," resin bed: 140 mm long, 7 mm diameter), and collected in two batches, and then the two batches were passed separately through an anion-exchange column (Dowex A-1, 200 to 400 mesh.

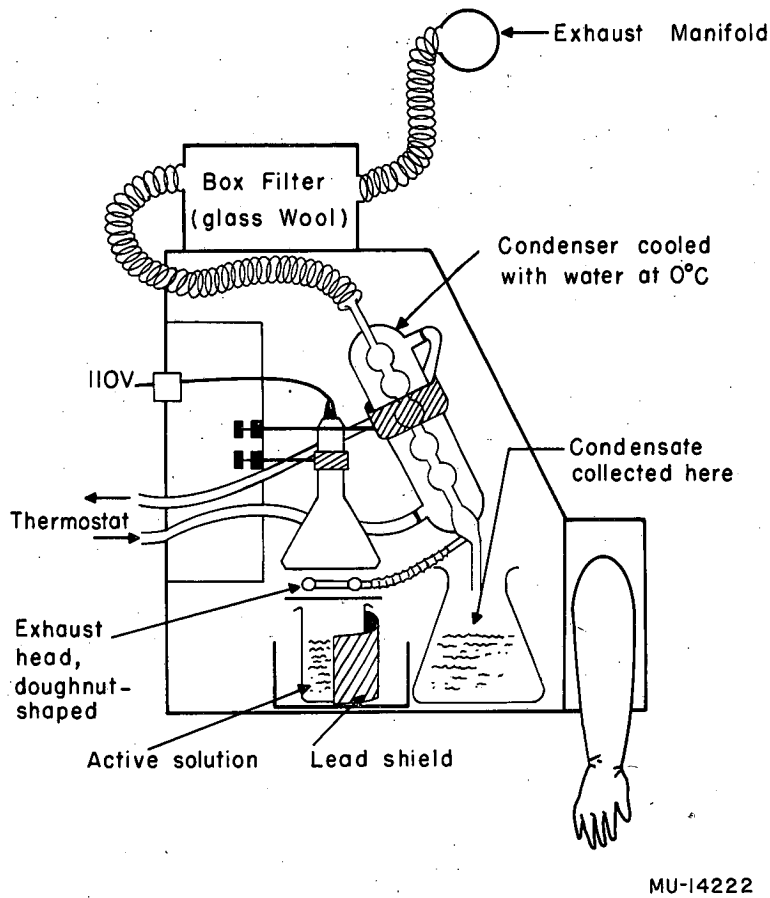

Fig. 6. Setup for evaporation of large quantities of solution in a gloved box (schematic drawing).

AG "Bio-Rad-Lab"; resin bed: 130 mm long, 7 mm diameter). The two batches thus obtained were precipitated with NH_3 gas, centrifuged, washed several times with NH_3 water, dried under the heat lamp until the hydroxides started to shrink away from the walls of the centrifuge cone, and finally dissolved in spectrographically pure HCl. The spectrographic assay of the two americium samples thus obtained is given in Table I, Columns 13 and 14. Even though the material was not purer than 99.7% in the first fraction and 99.4% in the second (tail) fraction, it was considered of sufficient purity for the chemical operations and metallurgical studies. The americium balance for the total processing of sample C-V is given in Table IX.

Table IX

Americium balance for C-V

History of Am-containing material	Am content[a] (μg)
Total starting material	about 90000
Recovered (greater than 99.7% pure)	69000
Recovered (" " 99.4% ")	17200
Lost in 1 liter of alkaline waste	4100
Recoverable (in 270 ml of acid waste)	4800
Total yield of recovered material	86200

[a]Values accurate to about ± 5% obtained by α assay.

PHYSICAL PROPERTIES OF PURE AMERICIUM COMPOUNDS

The samples isolated in this research were obtained as solutions of $AmCl_3$ in spectrographically pure HCl at the end of all chemical procedures. In dilute form, they show a delicate pink color (similar to solutions of trivalent erbium); in higher concentrations the color changes to reddish yellow. The solutions of trivalent americium show a characteristic absorption spectrum, which consists of single lines, similar to the absorption spectra of the lanthanides. It is characterized by a sharp, intense absorption band in the green part of the visible spectrum. This line may easily be observed in a pocket spectroscope.

Solid americium salts (for instance the dry chloride) exhibit a weak orange-red luminescence when viewed in the dark. This luminescence is especially pronounced when the material is absorbed in a tight band on an ion-exchange column. The luminescence is caused by the alpha radioactivity. This is not surprising, as 1 mg of Am^{241} corresponds to $7.06 \cdot 10^9$ alpha disintegrations per minute.

The strong alpha activity causes concentrated solutions (of the order of 10 mg/ml) to evolve constantly a mixture of hydrogen and oxygen from the radiation decomposition of the water. Therefore such solutions should be stored in vessels having a pressure vent, thus allowing the escape of the gas. The same applies to solid, incompletely dried, or hydrated samples. Such samples should not be sealed in ampoules, because explosions may occur. The rules that govern the handling of large quantities of Am are about the same as those which are in common use for the handling of radium. Absolutely dry compounds of americium (like the ignited dioxide or the dried and ignited fluoride) may, at least for some time, be stored in sealed containers.

DISCUSSION

The work described in this report was undertaken with the aim to separate milligram amounts of americium-241 for inorganic syntheses and physicochemical measurements from large quantities of (partly radioactive) impurities and to purify the separated material as far as possible. This aim could be achieved by suitable combination of various individual methods described in the literature. A total of 103 mg of americium-241 could be isolated in almost spectroscopically pure state. The results obtained in the sometimes rather arduous separation processes may be summarized as follows:

A. Metathesis of Insoluble Materials

1. Lanthanide and Actinide Fluorides

An improved method for the metathesis of acid-insoluble actinide and lanthanide fluorides is based on the use of a solution of 20g of $Al(NO_3)_3 \cdot 9H_2O$ in 100 ml 10 M NaOH. The fluorides are slurried up in an excess of this solution and heated for some time under the infrared lamp. The metathesis of the fluorides into the hydroxides takes place much faster under these conditions than if pure 10 M NaOH is used for the same purpose.

The solution of the fluorides in a saturated solution of H_3BO_3 in 0.1 M HNO_3 goes smoothly, but the large quantities of boric acid (and of fluoborate formed out of boric acid and fluoride) may interfere strongly with subsequent separation procedures. Boric acid itself is difficult to remove, because it is partially precipitated as borate together with hydroxides.

Experiments to dissolve the fluorides with a mixture of 0.1 M HNO_3 and $Al(NO_3)_3 \cdot 9H_2O$ were unsuccessful.

2. Organic Materials

Organic materials should be destroyed by wet-ashing methods only, because open flames or electric furnaces must not be used in the standard alpha gloved box, because there is always the danger that gloves or wall coating may catch fire. Wet ashing with concentrated H_2SO_4 in conjunction with concentrated HNO_3 or H_2O_2 is possible, though. The acid fumes evolved in this process quickly destroy the sensitive off-gas filters and gloves, however. Unlike the fumes of concentrated HCl they do not attack metal parts of the gloved box too readily.

B. Course of the Americium in the Separation Procedure

As an element with the typical behavior of a rare earth, americium may be precipitated together with the other actinides and lanthanides by ammonia as group reagent. Hence it may be separated from all other elements except those which are also precipitated in the ammonia subgroup. According to the experience gained in this work, the following elements, which are precipitated upon addition of ammonia, are most frequently encountered together with the americium:

Al, Ce, Cr, Fe, La (the most important of these), Np, Pu, Si, Th, Yb, Y, Zr.

Of these, Al, Cr, and Si may easily be removed by precipitation of $Am(OH)_3$ from strong NaOH in the presence of a small amount of H_2O_2. Whereas Al dissolves as the aluminate, Cr as the chromate, and Si as sodium silicate, the other elements mentioned precipitate together with the americium. Ce, Np, Pu, Th, and Zr as the tetravalent ions form peroxy compounds, which may be precipitated from weakly acidic solution (in absence of Cl^- ion), while the lanthanides, the transplutonium elements, and the iron stay in solution. As the tetravalent ions mentioned above also form fairly stable anion complexes of the type $[MeCl_{3+x}]^{x-}$, it is possible to remove them on an anion-exchange column (Dowex A-1) from concentrated HCl. The lanthanides and transplutonium elements pass through the column. Iron, which forms chloro complexes of the type $[FeCl_{3+x}]^{x-}$, is also held back on the column. It may be stripped off the column after elution of the lanthanide-transplutonium fraction with 8 M HNO_3, while the tetravalent elements, which form strong nitrato complexes, remain on the column and may be stripped with 0.1 M HCl. The elution of the iron with 8 M HNO_3 is the most convenient method to separate it cleanly from the plutonium. In general, the separation of the tetravalent ions on the anion-exchange column is to be preferred if iron is present in large quantities, because this element interferes with the peroxide precipitations.

The separation of the americium from the lanthanides is difficult and may be compared with the separation of two nonadjacent rare earths. The method to be applied depends on the ratio americium : lanthanum.

1. Small Amounts of Americium and Large Quantities of Lanthanum

For this most frequent (and unfortunately most difficult) case, Werner's extraction method is quite useful, but the anion-exchange column using 12.5 M LiCl as the eluant may be applied with success as well. The TTA extraction is inconvenient in the presence of large amounts of americium, because the Am-TTA-chelate precipitates, causes emulsification and interferes with the extraction. This difficulty may be surmounted by centrifuging and mechanical separation of the various phases.

Scavenging the americium on an anion-exchange column from 12.5 M LiCl solution is especially useful, because it separates and concentrates even small quantities of americium from stock contaminated with large amounts of lanthanides. A disadvantage is, however, that protective equipment against neutron emission has to be used when larger quantities of americium are being processed. The alphas of the americium react with the lithium nuclei in the lithium chloride solution with emission of neutrons. Consequently, if larger alpha intensities are present, stronger neutron fluxes will be encountered as well. Furthermore, the lithium chloride solution is rather viscous and requires a long time to pass through the column. It also tends to creep like an oil on surfaces and coat everything with a slippery film. Rubber gloves that have come in contact with the LiCl solution become sticky and prevent safe working in the box. In spite of these drawbacks, the lithium chloride method seems to be the best for the concentration of small amounts of americium from bulk lanthanides, with the possible exception of the thiocyanide-column method of Asprey and co-workers.[13]

2. Comparable Amounts of Americium and Lanthanum

For this case, the well-tested cation-exchange column in combination with alcoholic HCl as the elutriant proves to be by far the best method. If the dimensions of the column are calculated for the amount of material to be loaded, this method yields an almost chemically pure americium in one step. To accomplish this, however, it is necessary that the ratio of the length of the loaded part of the column to the total length be 1:10 or less. It is further necessary that one do not attempt to include the elution tail of the americium peak in the main fraction. This tail usually contains a small amount of lanthanum, which precedes the lanthanum peak that is slowly moving down the column (compare, for instance, the spectrographic data in Columns 11 and 12 in Table I). The only disadvantage in this separation method is, that the americium, though very pure, is obtained as a very dilute solution in strong HCl (13 M). It is not possible to recover the americium from this solution by precipitation, but only by evaporation of the solution. This concentration procedure is rather difficult inside a gloved box, because the HCl fumes cause extensive corrosion of the metal parts inside the box. The greatest advantage of the alcoholic HCl column is, however, that (with the exception of the alcohol, which may easily be removed) it does not use any other organic complexing agents whose removal afterwards might be cumbersome. As the processing of C-V has shown, it is possible to operate a larger HCl column, which uses several liters of elutriant, inside a standard gloved box,

and to separate tenths of grams of americium from gram amounts of lanthanum in this way. On this scale, however, the operation stretches the capacity of the standard gloved box to its limit.

3. Large Amounts of Americium with Small Quantities of Lanthanum

In this case, the alcoholic HCl column is superior to all other methods for the reasons discussed in (b), as could be demonstrated on the final purification of the combined americium from C-II, C-III, and C-IV. The precipitation methods quoted in the literature,[13, 20] in which the americium is oxidized to Am^{5+} or Am^{6+}, are still insufficiently developed for their application to be recommended. The main difficulty in the precipitation methods is to maintain the americium in the higher valence until after the separation has been completed. This, however, is achieved quantitatively in rare instances only, so that one has to take into account losses of material. It seems promising, though, to study more closely the separation methods based on precipitations and to determine optimal conditions for their application.

The separation of the americium from the actinides is not difficult, if U, Np, and Pu alone are present besides the americium. Uranium may be extracted with ether, while the transuranic elements remain in the aqueous phase. Np behaves similarly to Pu, but it is rarely encountered in larger amounts. One has to consider, though, that it is constantly formed during the alpha decay of the americium. The amounts formed, however, are negligible even for longer periods of time. The behavior of Pu has been discussed in a preceding paragraph. Somewhat difficult is the separation of curium and the transcurium elements. The elution with α-hydroxyisobutyric acid from a Dowex 50 cation-exchange column has proved useful for this purpose. Under normal conditions, no transcurium elements are encountered. Curium-242 is the most likely heavy element isotope. It may occur in samples that have been "cooled" for only a short time. In samples that have been cooled for long times (several years) this curium nuclide may be neglected, because it has decayed away by then. As could be shown in a number of alpha-pulse analyses, none of the americium samples prepared in the course of this work showed the presence of detectable amounts of curium.

ACKNOWLEDGMENTS

I am grateful to Professor Glenn T. Seaborg for the possibility of one year's study at the Radiation Laboratory of the University of California, and for the hospitality granted at his institute.

Especially, I am indebted to Professor Burris B. Cunningham, in whose laboratory and under whose immediate supervision, this work was carried out, and who aided me with his great experience in the field of transuranic elements chemistry in the most generous manner.

To Professor Isadore Perlman, Professor Stanley G. Thompson, Dr. James C. Wallmann, Dr. Earl K. Hyde, and Mr. Thomas C. Parsons, I owe further thanks for many helpful and valuable suggestions and discussions.

I wish to thank Dr. Nelson B. Garden and his health chemistry group for providing the necessary equipment and protective enclosures, and for the constant health supervision in the work with the large activities.

My thanks are due to Miss Lilly Y. Goda for her constant help in current laboratory work and in counting the samples, and to Mr. George V. Shalimoff for the quick and precise performance of the necessary spectrographic assays.

Furthermore, I acknowledge my gratitude to the Information Division of the Radiation Laboratory for providing me with unclassified AEC reports, not available elsewhere, and the United States Atomic Energy Commission for the financial support granted to this work.

Information Division
10-17-57 db