UCRL 401

UNIVERSITY OF CALIFORNIA

Radiation Laboratory

TWO-WEEK LOAN COPY

This is a Library Circulating Copy which may be borrowed for two weeks. For a personal retention copy, call Tech. Info. Division, Ext. 5545

BERKELEY, CALIFORNIA

DISCLAIMER

This document was prepared as an account of work sponsored by the United States Government. While this document is believed to contain correct information, neither the United States Government nor any agency thereof, nor the Regents of the University of California, nor any of their employees, makes any warranty, express or implied, or assumes any legal responsibility for the accuracy, completeness, or usefulness of any information, apparatus, product, or process disclosed, or represents that its use would not infringe privately owned rights. Reference herein to any specific commercial product, process, or service by its trade name, trademark, manufacturer, or otherwise, does not necessarily constitute or imply its endorsement, recommendation, or favoring by the United States Government or any agency thereof, or the Regents of the University of California. The views and opinions of authors expressed herein do not necessarily state or reflect those of the United States Government or any agency thereof or the Regents of the University of California.

Copy 2

UCRL-401

Unclassified Distribution

UNIVERSITY OF CALIFORNIA

Radiation Laboratory

UNCLASSIFIED

Contract No. W-7405-eng-48

SUMMARY OF THE RESEARCH PROGRESS MEETING

July 14, 1949

H. P. Kramer

Some of the results reported in this document may be of a preliminary or incomplete nature. It is the request of the Radiation Laboratory that the document not be circulated off the project nor the results quoted without permission.

Berkeley, California

SUMMARY OF THE RESEARCH PROGRESS MEETING

July 14, 1949

H. P. Kramer

High Energy γ-Rays. B. Moyer.

The high energy γ-rays that are produced by the 340 Mev proton beam of the 184-inch cyclotron in a carbon target are detected by means of the apparatus shown in Fig. 1. γ-rays are passed outside the cyclotron tank through a port in the shielding and impinge on a tantalum foil where they produce pairs of electrons that are bent by a suitable magnetic field into the two telescopes of proportional counters in coincidence. The magnetic field allows only those electrons to be counted which move with a certain energy. Since the two telescopes are in coincidence, only such an electron pair is counted where the energy that is available from the γ-photon has been evenly divided between the two electrons of opposite charge. The energy of the γ-photon is therefore twice the energy of an electron that moves in an orbit such that it can be counted and this orbit and the energy that corresponds to it are determined by the magnetic field that is applied.

An undesirable spread in electron energies that were counted with a given magnetic field strength resulted from the fact that electrons after having been produced by the materialization of γ-photons are scattered along their path through the tantalum foil. Thus they deviate from the direction of the γ-rays and on being subjected to the magnetic field enter an orbit that escapes the counters. The expression for the mean square scatter angle,

$$\overline{\theta}^2 = a \frac{t}{E^2} \ln bt ,$$

shows that the scatter angle increases with decreasing energy E of the photons and increases with increasing thickness of tantalum materializer. In order that the effect

of scattering might not prejudice the yield results at low energies in favor of those at high energies the thickness of materializer was adjusted with each change in magnetic field so that the losses due to scattering might be constant with energy. A further refinement of energy discrimination was achieved by placing the long axis of the materializer foil at right angles to the long axis of the cross section of the γ-ray beam so that the area available for pair production was reduced.

By varying the radial and azimuthal position of the 1/2 in. C target in the cyclotron and by reversing the proton beam it is possible to vary the proton energy effective in producing the γ-rays and also to observe γ-rays emitted at various angles from the direction of the proton beam. The graph of Fig. 2 shows energy distributions for γ-rays produced by protons at various energies at different angles generally in the forward direction with respect to the proton beam. It is felt that the low energy portions of these graphs have now been over-corrected so that the rise should actually be somewhat steeper. A rough calculation indicates that if one takes the integrated yield for 340 Mev protons to be 100, that for 290 Mev protons is about 30-40, for 230 Mev about 5 and for 180 Mev about 1. Fig. 3 shows the energy distributions for various proton energies in a general backward direction.

Fig. 4 shows a graph of the energy distribution of γ-rays produced in 1/2 in. of carbon by 340 Mev protons as viewed in the direction of the beam and as seen at 180° from the direction of the beam. A possible explanation of the shift of maximum with angle has been worked out by T. Taylor by attributing to the center of mass of the impinging proton and the nucleon that partake in the action producing the γ-photon a certain motion and calculating the shift in the energy spectrum due to the Doppler effect. The ratio β of the velocity of the center of mass to the speed of light that one computes on the assumption that the proton moves with an energy of 340 Mev and the target nucleon is stationary is 0.4. The experimental results however require that $\beta < 0.4$. In fact the calculated range for β is 0.28 - 0.33. The following table compares

the results obtained on the hypothesis that $\beta = 0.33$ to those of the experiment.

	Predicted rel. yield	Observed Rel. yield
0°	2.0	2.1
180°	1.0	1.0
133°	1.2	1.1

The relative yield is the ratio of the corrected number of γ-rays observed to the activity produced in the bombarded carbon. It is thus a measure of the number of photons produced per proton collision. The yield of γ-rays from a Be target integrated over the observed energy region corresponds to a cross section of 3×10^{-28} cm^2/steradian per Be nucleus.

The tentative conclusions that can be drawn at present from the results of this research are that the particles that must be postulated as parents of γ-photons are neither tied to the nucleus because of the observation of a Doppler effect nor to a nucleon because of the observed energy spread. It is possible that two photons are emitted by each event since most photons that were observed carried about half the energy available for photon production.

Interpretation of γ-rays. T. Taylor.

The graph of Fig. 4 was obtained by measuring the energy distribution of γ-rays produced in 1/2 in. of carbon by the 340 Mev proton beam of the 184-inch cyclotron. The curve whose maximum lies at about 60 Mev represents the distribution of γ-rays emitted at 180° from the direction of the beam and the curve whose maximum lies at 120 Mev represents the distribution of γ-rays observed in the direction of the beam.

An attempt was made to interpret these experimental results by assuming the shift in energy distribution with angle to be due to a motion of the center of mass and the mechanism of the Doppler effect. Therefore calculations were carried out to determine the velocity that must be assumed for the center of mass so that in the

system that is at rest with respect to the center of mass the emission of γ-rays is isotropic and with respect to the laboratory system the distribution appears like that of Fig. 4.

The production of γ-rays was thought to proceed in two stages. The assumption was made that the interaction of two nucleons, one of these being the incoming proton, tears loose a particle (a neutral meson) that decays by the emission of two γ-rays in opposite directions. It is a fairly reasonable assumption that mesons are produced spherically symmetrically in the center of mass system of the two nucleons and that the meson in turn decays by the isotropic emission of γ-rays in its center of mass system.

An expression for the supposition that a system exists where the emission of γ-rays is isotropic is

$$N_\gamma(k, \theta, \varphi) = f(k)\, dk\, d\Omega \,, \qquad (1)$$

where

k = energy of γ-photons in the laboratory system

θ = angle between direction of motion of photons with direction of motion of center of gravity of system where photons are emitted isotropically.

Ω = solid angle subtended at center of mass of above system

N_γ = number of γ-rays observed.

The Doppler effect transforms the energy of emission k' to the energy observed in the laboratory system k.

$$k' = k\gamma(1 - \beta \cos\theta) \qquad (2)$$

where

$$\gamma = 1/\sqrt{1 - \beta^2}$$

and

β = the velocity of the center of mass of the isotropic system relative to the speed of light.

If one denotes the distribution in the laboratory system by $g(k, \theta)$

$$g(k,\theta) = \frac{\sqrt{1-\beta^2}}{1-\beta\cos\theta}\, f(k') \qquad (3)$$

Equation (2) offers a means for determining the mass of the meson on the hypothesis that this particle dissipates its energy by the production of two γ-photons.

For $\theta = 0^\circ$

$$k_1 = k'\sqrt{\frac{1+\beta}{1-\beta}}$$

and for $\theta = 180^\circ$

$$k_2 = k'\sqrt{\frac{1-\beta}{1+\beta}}$$

so that

$$k_1 k_2 = k'^2 = \left(\frac{\mu}{2}\right)^2$$

where μ is the rest mass of the meson. From the results displayed in the graph of Fig. 4 a value $\mu \cong 300$ was calculated.

One can verify by equation (3) that if one multiplies the values of the ordinates and abscissas of the curve for 0° by $\sqrt{\frac{1-\beta}{1+\beta}}$ and similarly transforms the curve for 180° by multiplication by the scale factor $\sqrt{\frac{1+\beta}{1-\beta}}$ the two energy distributions are expected on the basis of the present theory to coalesce into the curve of the energy distribution in the system of isotropic emission. It was found that the closest coincidence is obtained by letting $\beta = 1/3$.

When one examines the energy distribution F(E) of the mesons that decay to γ-rays one finds that

$$f(k) = \int_y^\infty \frac{F(E)\, dE}{p}$$

It is interesting to note that the lower limit of the integral,

$$E \geqslant y = \frac{\mu}{2}\left(\frac{2k}{\mu} + \frac{\mu}{2k}\right),$$

implies that two energies of emission of γ-rays k_1 and k_2 correspond to a single meson energy E and that these two values are related by the formula

$$k_1 k_2 = \left(\frac{\mu}{2}\right)^2 .$$

A good fit for the γ-ray energy distribution in the system of isotropic emission was obtained by letting

$$g(y) = e^{-Ky} \quad \text{with } y = \frac{\mu}{2}\left(\frac{2k}{\mu} + \frac{\mu}{2k}\right).$$

The theory was compared with the energy distribution of π mesons in a system where they are emitted with spherical symmetry. It was found that here the best fit was obtained by letting $\beta = 0.28$. The two meson energy distributions are compared in the graphs of Fig. 5.

Production of Mesons by Synchrotron X-rays. R. S. White.

The experimental arrangement that is used is sketched in Fig. 6. A well collimated X-ray beam impinges on a carbon rod of 3 in. length and an exposed face area of 1 in. x 1 in. Four sets of plates are arranged around the radiator. These plates are protected by different thicknesses of Pb absorber so that a crude energy distribution can be measured.

On the photographic plates one can distinguish between four different types of meson tracks. Their appearance is indicated in Fig. 7. There is uncertainty at times regarding the assignment of the sort of track that is shown in Fig. 7 c. This track may represent either a π-μ decay or a one prong star. They are arbitrarily counted as π-μ decays. When there is a high electron background resulting in a dense distribution of exposed grains, a π-μ decay track may sometimes not be distinguished from a ρ track.

It was the practice in the past to evaluate the ratio of the number of negative π mesons to that of positive π mesons by means of the formula

$$\frac{\pi^-}{\pi^+} = \frac{1.376}{1/2(\text{total} - 1.376)}$$

Because C-211 Ilford plates are now used in preference over electron plates that registered a much higher background, it is thought that the count of π-μ decays is sufficiently complete to justify the use of the formula

$$\frac{\pi^-}{\pi^+} = \frac{1.376}{(\pi^+\text{-}\mu^+)+(\pi^+\text{-}\mu^+)}$$

doubtful.

The ρ tracks that are seen are not included in the statistics since they are made by μ mesons.

The values of the ratio π^-/π^+ as a function of meson energy are:

Energy Range				
20-30 Mev	32	18	2.4	.7
30-54 Mev	171	89	2.6	.3
72-150 Mev	24	25	1.3	.4

The energy distribution has been sketched out in a preliminary fashion. The data presented here have not been corrected for solid angle.

Energy Range.	Rel. no. of mesons/mev.
0-20	.3
20-30	4.6
30-40	9.6
40-45	7.3
45-50	7.2
50-55	6.7
72-85	3.4
102-114	.4
116-142	.4
142-154	.1

An indication of the trend of the excitation function is given by the following values:

X-ray energy range	Total number of mesons
0-200 Mev	18
0-335 Mev	28
336-354 Mev	60

INFORMATION DIVISION
7/26/49:hw

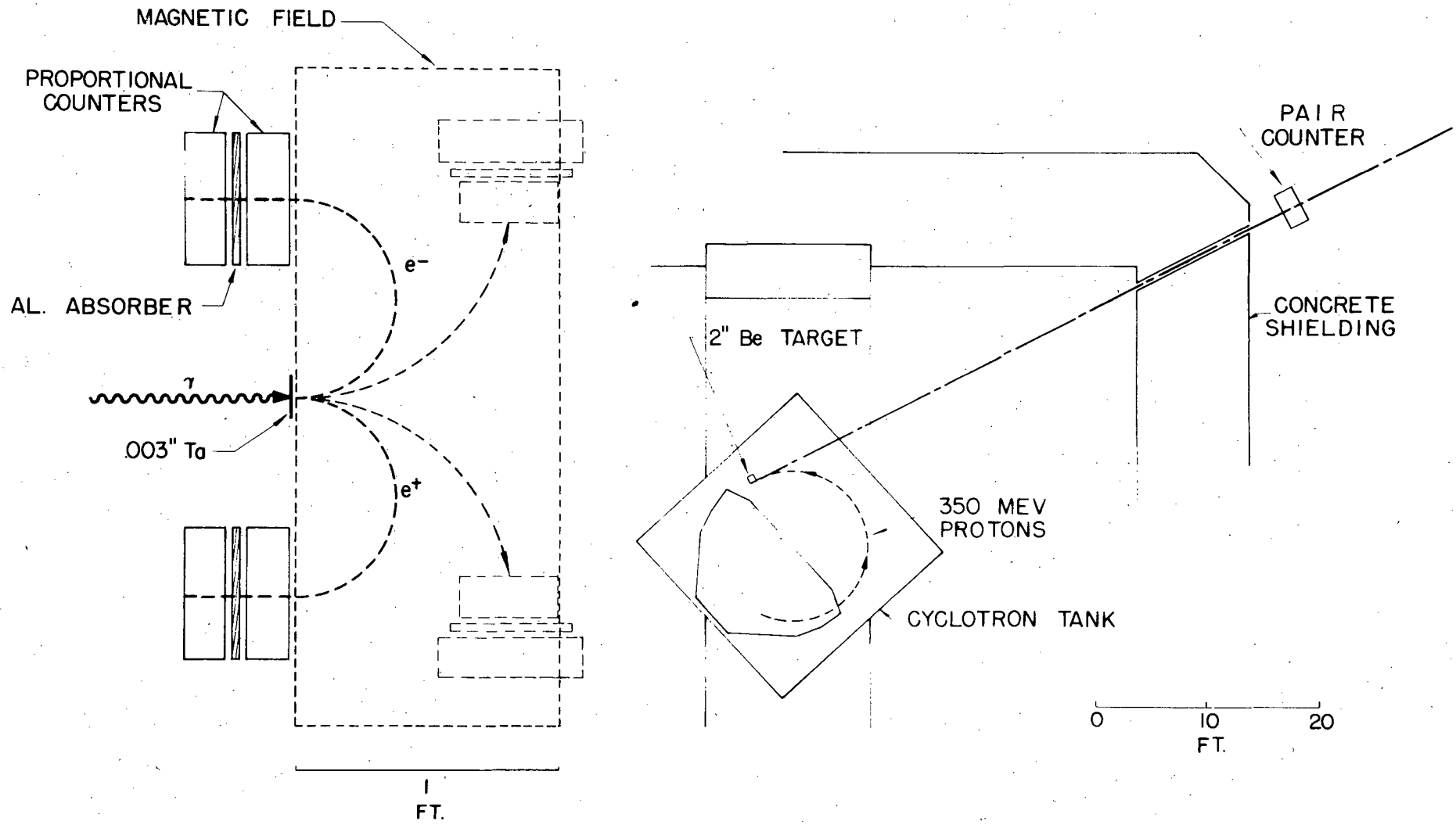
MAGNETIC FIELD
PROPORTIONAL COUNTERS
AL. ABSORBER
e^-
γ
.003" Ta
e^+
1 FT.
PAIR COUNTER
CONCRETE SHIELDING
2" Be TARGET
350 MEV PROTONS
CYCLOTRON TANK
0
10
20
FT.

FIG. 1

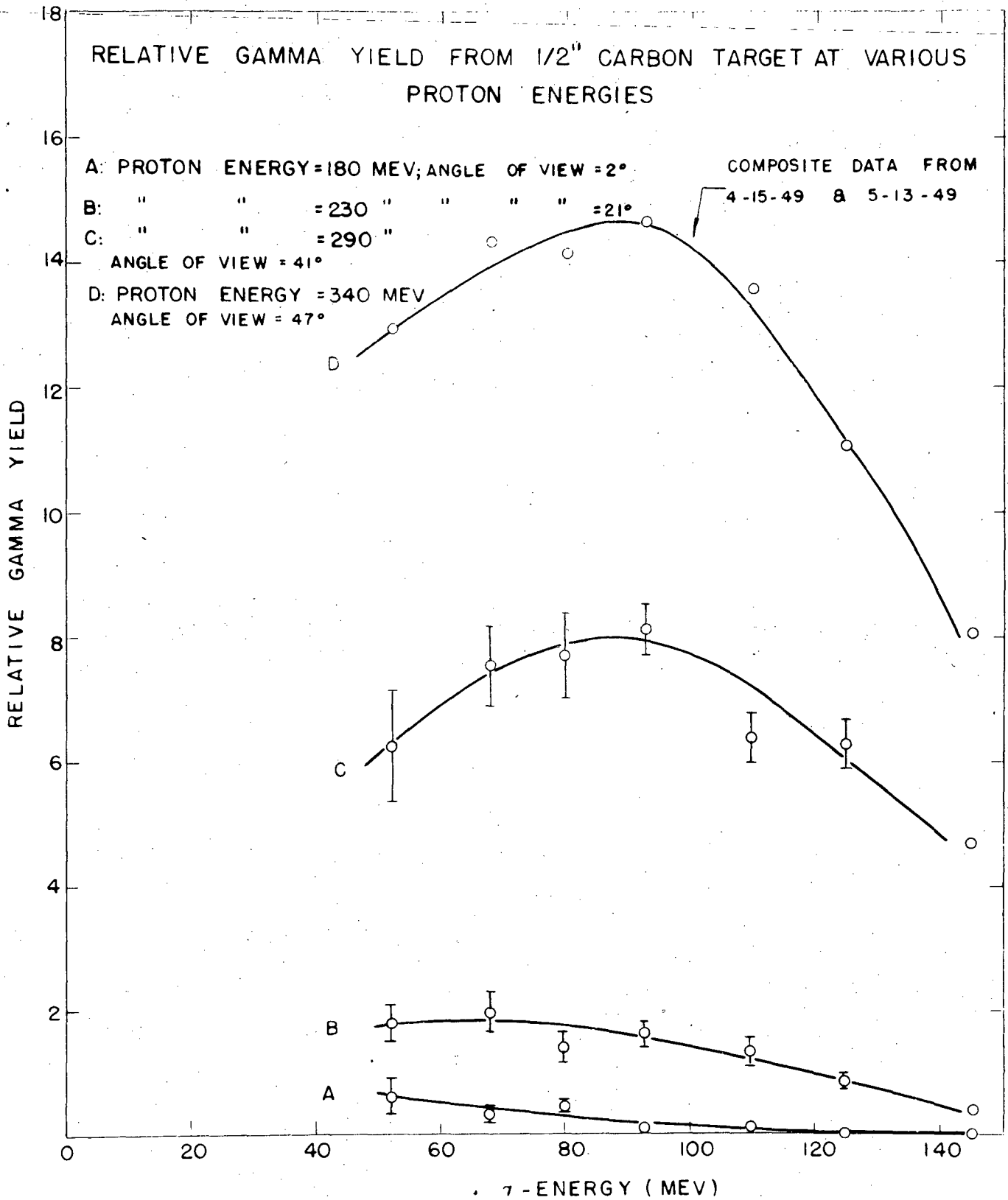
RELATIVE GAMMA YIELD FROM 1/2" CARBON TARGET AT VARIOUS PROTON ENERGIES
A: PROTON ENERGY = 180 MEV; ANGLE OF VIEW = 2°
B: " " = 230 " " " " = 21°
C: " " = 290 "
ANGLE OF VIEW = 41°
D: PROTON ENERGY = 340 MEV
ANGLE OF VIEW = 47°
COMPOSITE DATA FROM
4-15-49 & 5-13-49
RELATIVE GAMMA YIELD
γ-ENERGY (MEV)
A
B
C
D
0
20
40
60
80
100
120
140
2
4
6
8
10
12
14
16
18

FIG. 2

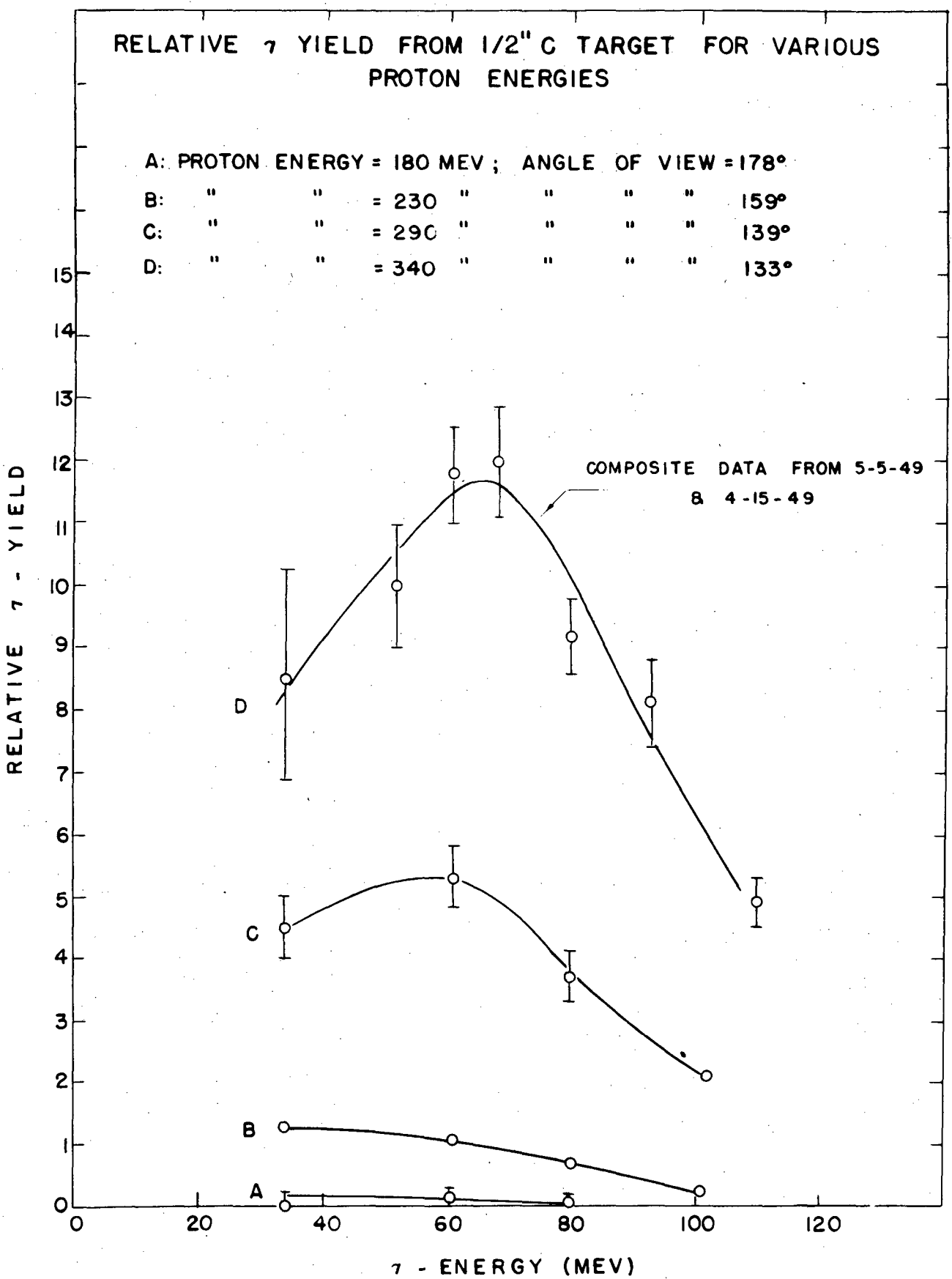
RELATIVE γ YIELD FROM 1/2" C TARGET FOR VARIOUS PROTON ENERGIES
A: PROTON ENERGY = 180 MEV ; ANGLE OF VIEW = 178°
B: " " = 230 " " " " 159°
C: " " = 290 " " " " 139°
D: " " = 340 " " " " 133°
COMPOSITE DATA FROM 5-5-49 & 4-15-49
D
C
B
A
RELATIVE γ - YIELD
γ - ENERGY (MEV)
0
1
2
3
4
5
6
7
8
9
10
11
12
13
14
15
0
20
40
60
80
100
120

FIG. 3

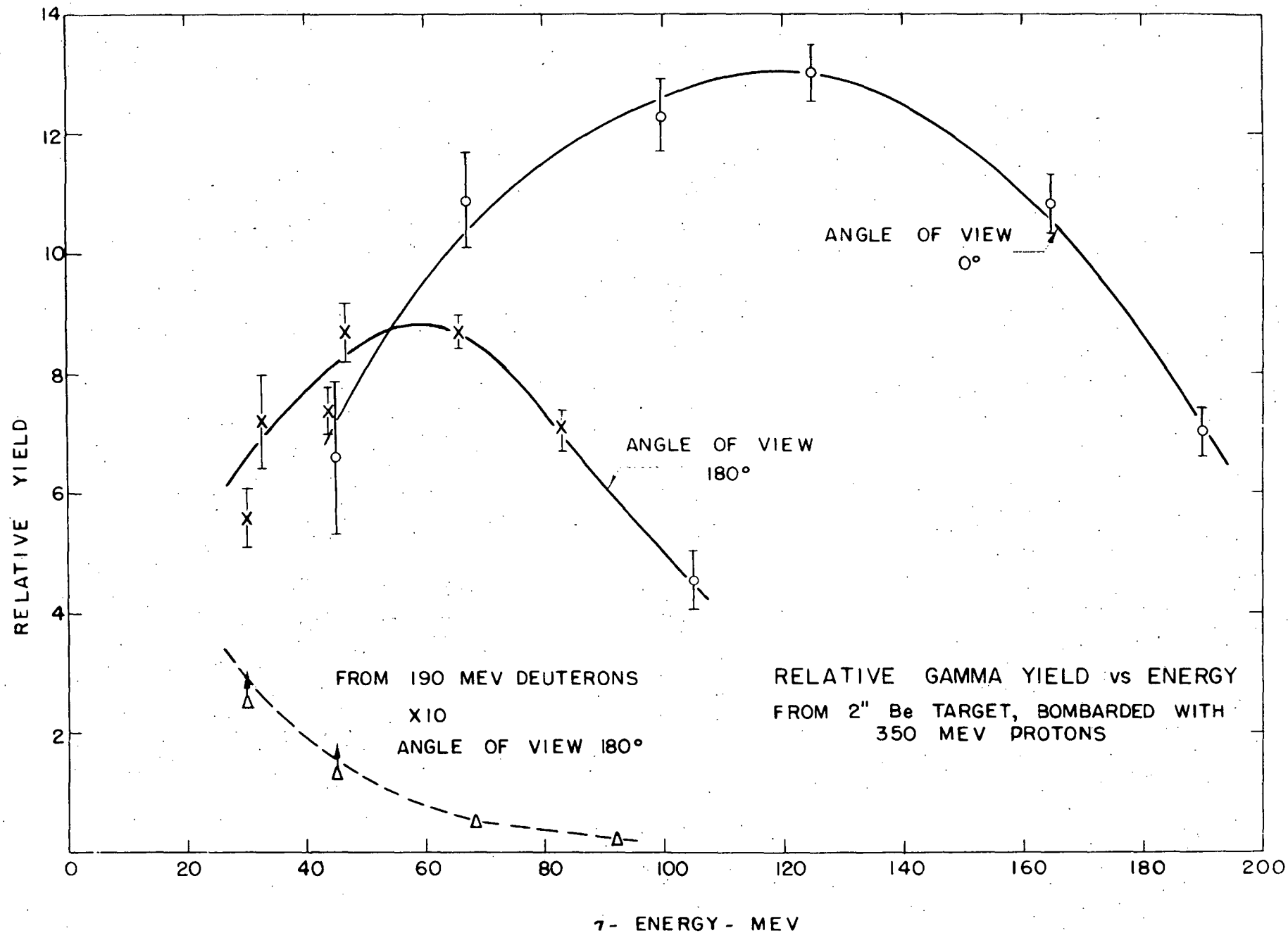
RELATIVE YIELD
γ- ENERGY - MEV
ANGLE OF VIEW 0°
ANGLE OF VIEW 180°
FROM 190 MEV DEUTERONS
X10
ANGLE OF VIEW 180°
RELATIVE GAMMA YIELD vs ENERGY
FROM 2" Be TARGET, BOMBARDED WITH 350 MEV PROTONS

FIG. 4

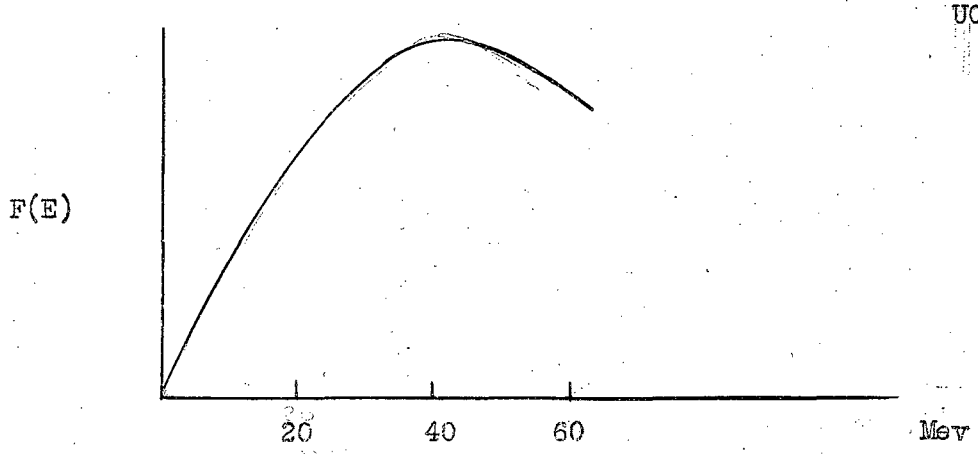

Neutral Meson Energy Distribution

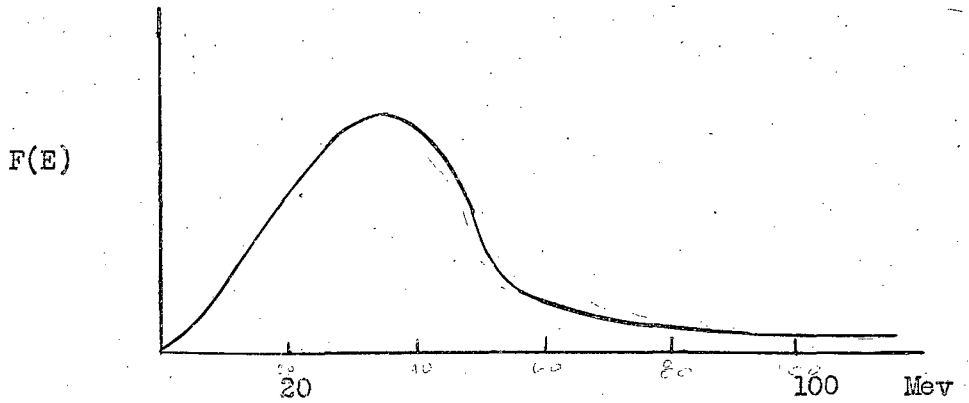

Meson Energy Distribution

Fig. 5

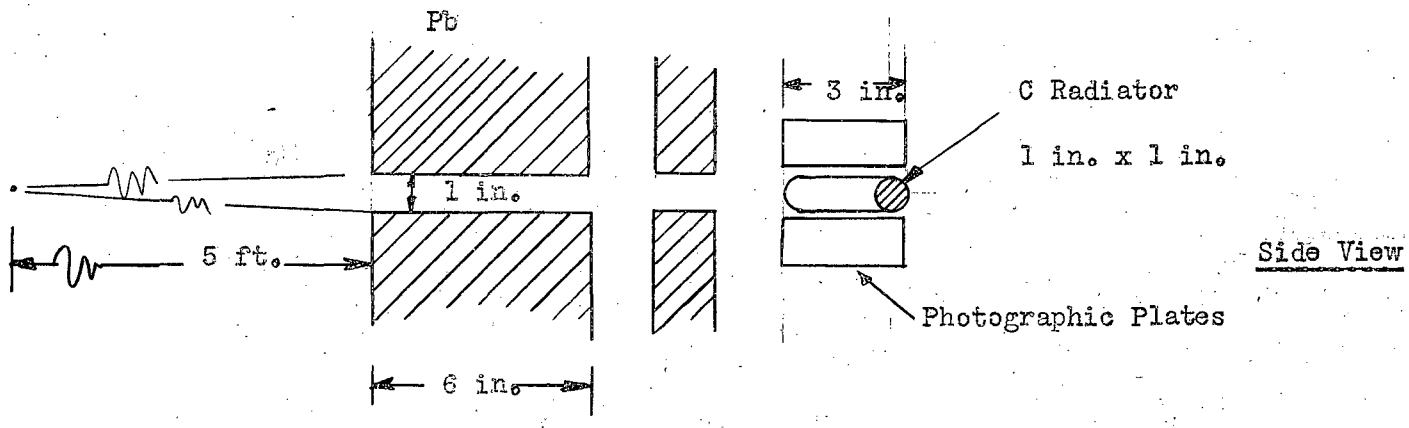

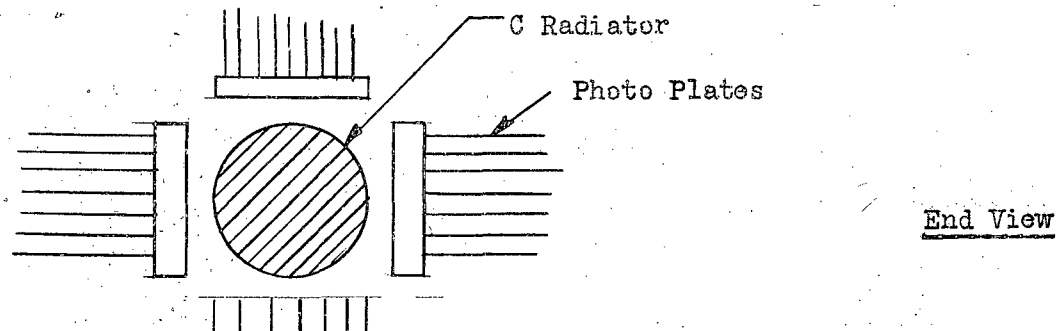

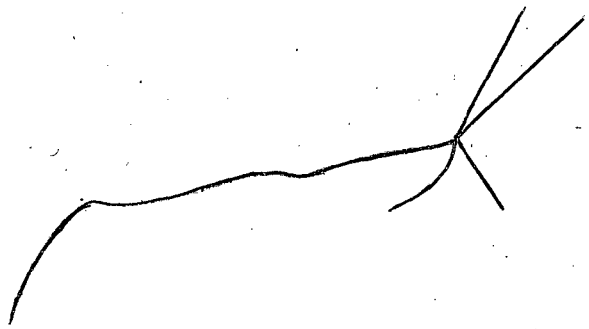

σ meson track

(a)

(π-μ) decay track

(b)

(π-μ)? decay track

(c)

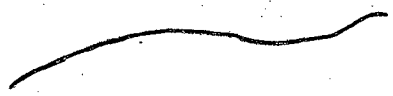

ρ track

(d)

Fig. 7