UCRL-424
Chemistry-General

Copy 1.

UNIVERSITY OF CALIFORNIA

Radiation Laboratory

DECLASSIFIED

Contract No. W-7405-eng-48

MICROCHEMICAL METHODS USED IN NUCLEAR CHEMICAL RESEARCH

B. B. Cunningham

August 30, 1949

Special Review of Declassified Reports
Authorized by USDOE JK Bratton
Unclassified TWX P182206Z May 79

REPORT PROPERLY DECLASSIFIED

J B Stuart 8-20-79
Authorized Derivative Classifier Date

Gordon Henderson 1-22-80
By Date

DECLASSIFIED

CAUTION

This document contains information affecting the National Defense of the United States. Its transmission or the disclosure of its contents in any manner to an unauthorized person is prohibited and may result in severe criminal penalties under applicable Federal Laws.

Berkeley, California

DISCLAIMER

This document was prepared as an account of work sponsored by the United States Government. While this document is believed to contain correct information, neither the United States Government nor any agency thereof, nor the Regents of the University of California, nor any of their employees, makes any warranty, express or implied, or assumes any legal responsibility for the accuracy, completeness, or usefulness of any information, apparatus, product, or process disclosed, or represents that its use would not infringe privately owned rights. Reference herein to any specific commercial product, process, or service by its trade name, trademark, manufacturer, or otherwise, does not necessarily constitute or imply its endorsement, recommendation, or favoring by the United States Government or any agency thereof, or the Regents of the University of California. The views and opinions of authors expressed herein do not necessarily state or reflect those of the United States Government or any agency thereof or the Regents of the University of California.

Standard Distribution	Copy Nos.
Argonne National Laboratory	8
Armed Forces Special Weapons Project	1
Atomic Energy Commission, Washington	2
Battelle Memorial Institute	1
Brookhaven National Laboratory	4
Bureau of Ships	1
Carbide and Carbon Chemicals Corporation (K-25 Plant)	4
Carbide and Carbon Chemicals Corporation (Y-12 Plant)	4
Columbia University (Failla)	1
Dow Chemical Company	1
General Electric Company, Richland	6
Hanford Operations Office	1
Iowa State College	1
Knolls Atomic Power Laboratory	4
Los Alamos	3
Massachusetts Institute of Technology (Gaudin)	1
Massachusetts Institute of Technology (Kaufmann)	1
Mound Laboratory	3
National Advisory Committee for Aeronautics	1
National Bureau of Standards	2
Naval Radiological Defense Laboratory	1
NEPA Project	1
New Brunswick Laboratory	1
New York Operations Office	2
North American Aviation, Inc.	1
Oak Ridge National Laboratory	12
Patent Branch, Washington	1
Sylvania Electric Products, Inc.	1
Technical Information Branch, ORE	15
UCLA Medical Research Laboratory (Warren)	1
University of California Radiation Laboratory	4
University of Rochester	2
Western Reserve University (Friedell)	1
Westinghouse Electric Corporation	2
Total	95

Radiation Laboratory
University of California
Berkeley, California

MICROCHEMICAL METHODS USED IN NUCLEAR CHEMICAL RESEARCH

B. B. Cunningham
Department of Chemistry and Radiation Laboratory
University of California, Berkeley, California

ABSTRACT

Microchemical methods developed primarily for use in nuclear chemical research are described and discussed in some detail.

Techniques described include microweighings, micro volumetric and gravimetric analysis, solubility measurements, methods for the study of reactions between solids and gases, the preparation of small samples of various reactive metals, density measurements, microcalorimetry, microspectrophotometry, magnetic susceptibility measurements and vapor pressure measurements.

In addition semimicro methods developed for use in the investigation of nuclear reactions are discussed.

MICROCHEMICAL METHODS USED IN NUCLEAR CHEMICAL RESEARCH

B. B. Cunningham
Department of Chemistry and Radiation Laboratory
University of California, Berkeley, California

Micro and semi-micro methods have found extensive application in AEC and other laboratories engaged in nuclear and radiochemical research. The principal applications have been in connection with the isolation and investigation of the properties of the synthetic and other rare elements. Of comparable importance, however, has been the widespread use of semi-micro methods for the chemical separations required in the investigation of various nuclear transformations. In these latter cases small-scale methods are preferred because of their superiority in speed and efficiency as compared with the common macro procedures.

An additional factor recommending the use of micro or semi-micro methods for research with radioactive materials is that adequate protection for research personnel is more readily effected by confining hazardous operations to relatively small areas.

No general review of micro methods and apparatus developed for use in nuclear chemical research has appeared since Seaborg's[1] brief description was published in 1945. It is the purpose of the present paper to review these developments in somewhat greater detail and to bring the subject up-to-date.

The primary justification for micromethods is to be found in their application to the investigation of rare materials. Prior to 1942 these applications were mainly in the fields of organic and biochemistry. With the production of the first few micrograms of plutonium by cyclotron bombardment in June of 1942, it became necessary to develop a broad field of

inorganic micro methods suited to submilligram quantities. This development was initiated by the microgram scale isolation and determination of the specific activity and half-life of the isotope Pu^{239}.[2] There followed a rapid development of methods suited to the general investigation of the properties of plutonium and its compounds. At the end of the war, when plutonium had become available in substantial amounts, there was keen interest in the investigation of the chemical properties of other synthetic and rare elements, which in some cases were of more limited availability than had been the case with plutonium. Existing micro methods were refined and new methods devised for the purpose of investigating these elements.

In many cases techniques and methods worked out before the war were of great value in providing a foundation for the specialized developments required by the various war-time Projects and AEC laboratories. Of most immediate application to the problems involved was the work of A. A. Benedetti-Pichler and M. Cefola[3,4] and their co-workers and of P. L. Kirk and co-workers.[5]

The principal developments in the field of microchemical apparatus and techniques designed primarily for research in nuclear chemistry have been the following:

I. Micromethods (microgram to milligram scale)

A. Microbalances. Commercially available microbalances have been used but little in the investigation of the chemistry of the synthetic elements, since these balances are, in most cases, insufficiently sensitive. Three types of elastic microbalances have been developed especially for work of this kind. The general design of these instruments is shown in Figures 1 through 3. In no case is the design wholly novel, since instruments of somewhat similar construction and comparable sensitivity have been described previously.[6,7,8,9]

Figure 1A: Simple Cantilever Balance-General Assembly.
1, quartz fiber beam; 2, beam arrest; 3, aluminum reflector; 4, door; 5, ionizing source; 6, wheel for adjusting angle of beam; 7, brass tube; 8, microscope objective; 9 filar micrometer; 10, metal stand; 11, removable wood block; 12, weighing pan of 0.5 mil platinum foil; 13, thin glass plate.

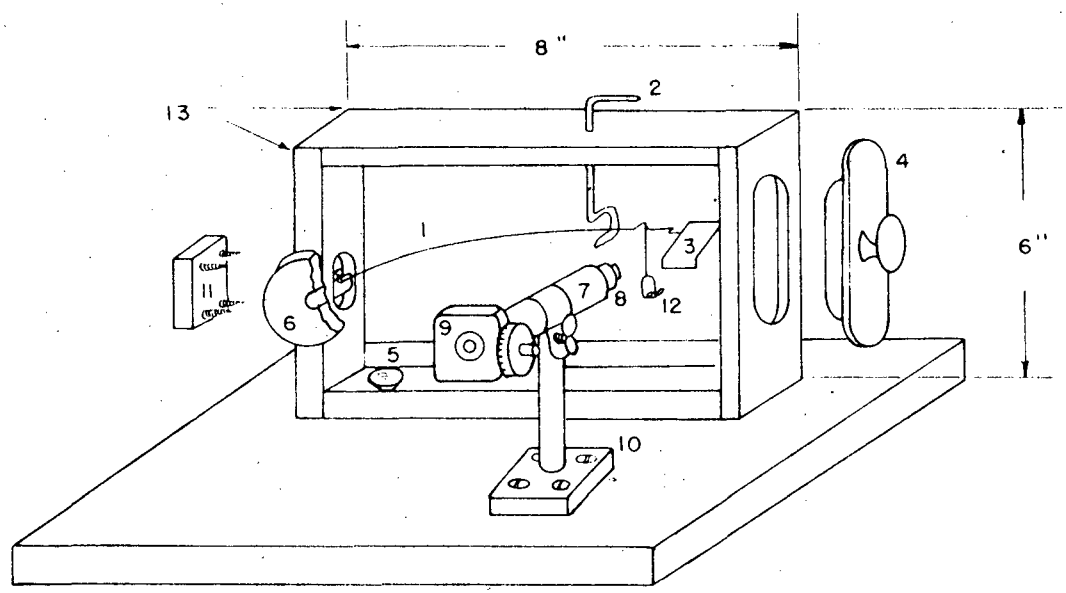

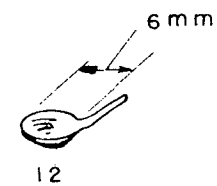

14006

Figure 1B: Simple Cantilever Balance- Beam Construction.
1, shank; 2, beam; 3, suspension fiber; 4, pointer; 5, pan hanger; 6, pan

Dimensions somewhat optional. Ordinarily A, L and P are 1, 12 and 3 cm respectively. The suspension fiber is 3 cm in length and 5 μ in diameter. The pan hanger is constructed from 75 μ diameter fiber. The platinum pan is 5 mm in diameter and 0.5 mil thick. For 0.01 μg sensibility the beam diameter is about 0.1 mm. The pointer is offset 7 mm to bring it nearer the glass side of the case.

Except for the pan the parts shown are constructed of fused quartz.

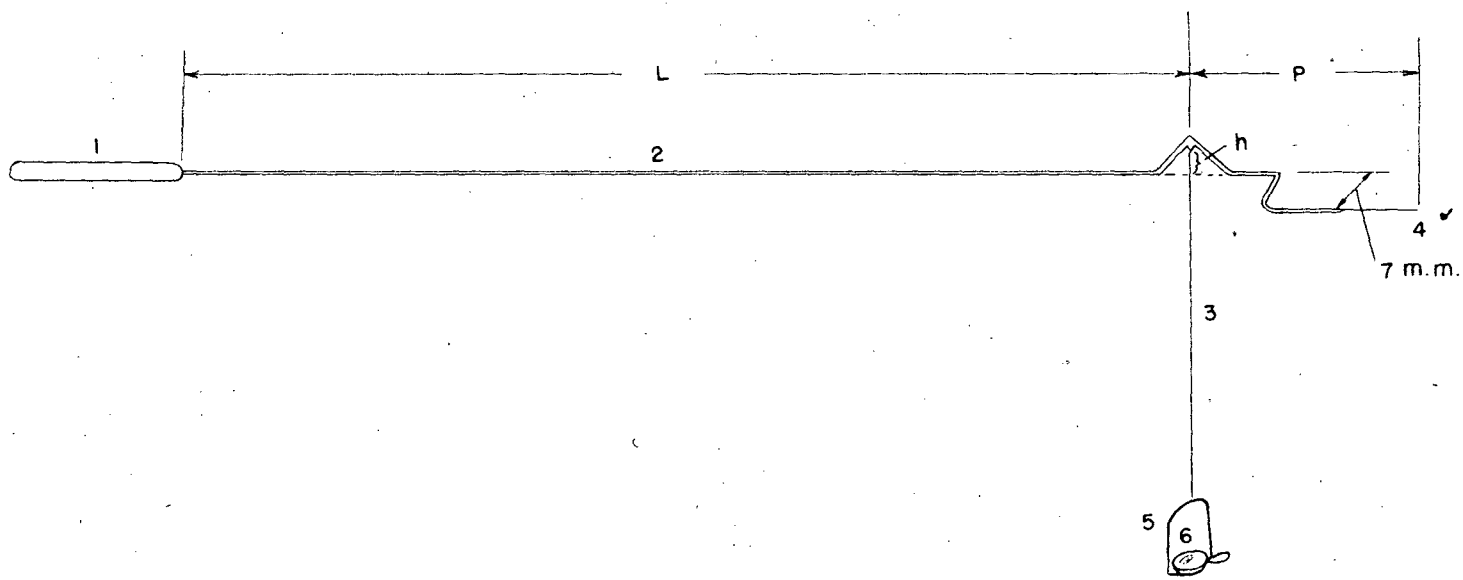

14007

Figure 2A: Kirk-Craig-Gullberg Quartz Microgram Balance-General Construction. 1, light source; 2, torsion fiber tension adjustment; 3, groove for outer case; 4, lucite rod; 5, quartz bow; 6, torsion fiber; 7, beam; 8, hang-down fiber; 9, collet attached to axle of torsion wheel; 10, low power objective; 11, pair of right angle prisms; 12, right angle prism; 13, prism to produce juxtaposition of fields; 14, torsion wheel; 15, cord for turning torsion wheel; 16, pan well; 17, pan hanger; 18, pan arrest; 19, pan arrest control wheel; 20, adjustable leg.

In the view shown, the top and one side of the inner case have been removed. The outer case is not shown.

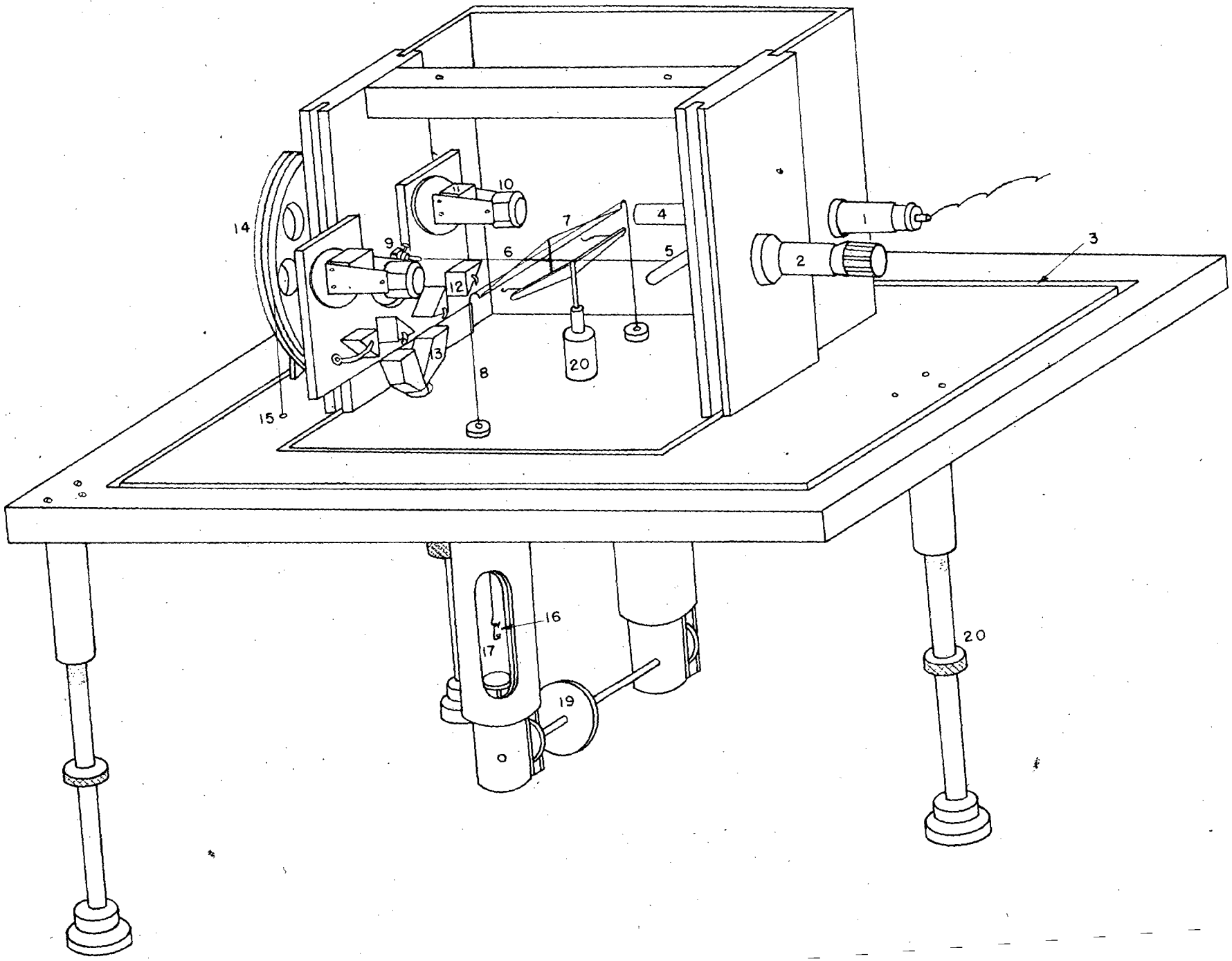

14004-

Figure 2B: Kirk-Craig-Gullberg Quartz Microgram Balance - Elastic and Optical Systems.

1, light source; 2, lucite rod; 3, index fiber; 4, low power objective; 5,6,8, right angle prisms; 7, silvered right angle prism; 9, ocular; 10, ground glass screen; 11, quartz bow; 12, beam; 13, torsion fiber; 14, torsion wheel axle; 15, hang-down fiber; 16, pan hanger; 17, condensing lens.

NOTE: The optical system shown is that employed in a modified form of the Kirk-Craig Gullberg balance designed by the author, and differs somewhat from the system shown in Fig. 2A.

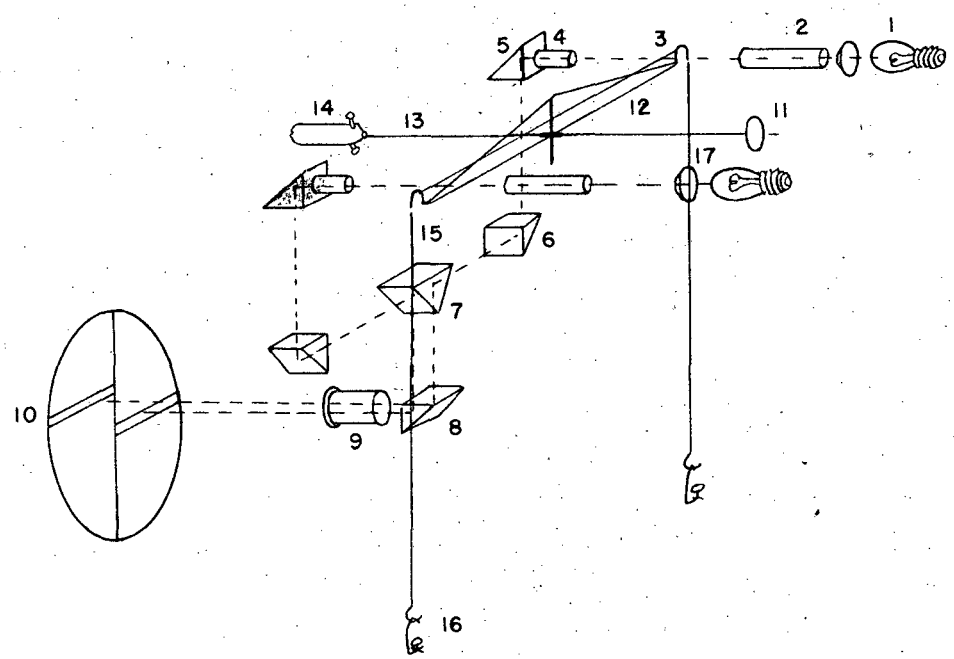

14008·1

Figure 2C: Kirk-Craig-Gullberg Quartz Microgram Balance-Detail of Beam.

Dimensions somewhat optional, but in most models L = 5 cm, T = 5 cm length, 24.5 μ diameter. Except for the 75 μ diameter diagonal fibers, the beam is made from 200 μ fibers. The suspension fibers and index fiber are 5 μ in diameter. The center of mass, M, is very near the center of rotation. Normally, h is made as small as possible.

All parts shown are made of fused quartz.

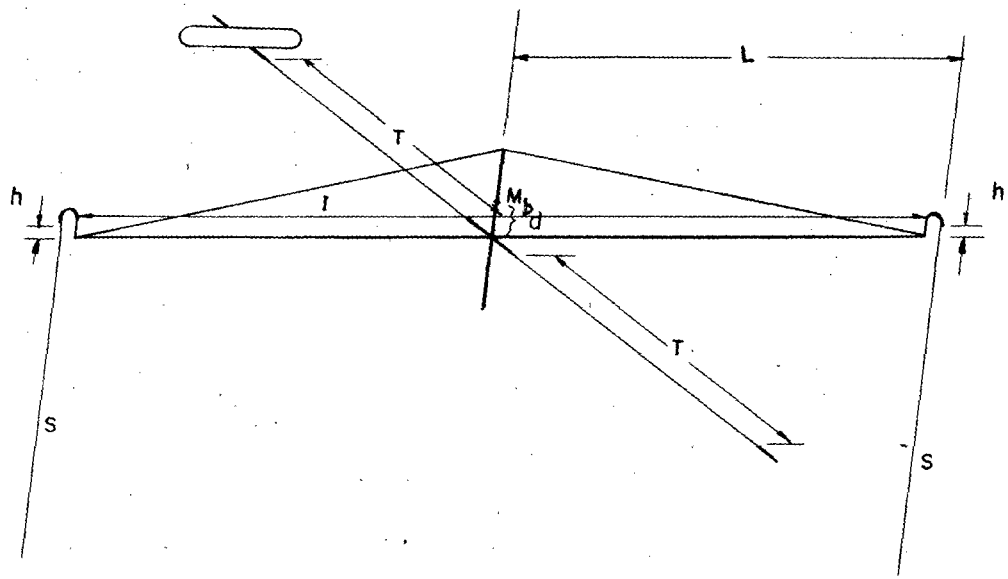
L
T
T
h
h
I
M_b
d
S
S

Figure 3: Garner High Capacity Quartz Fiber Balance.
1, light source; 2, condensing lens; 3,4, plane mirrors; 5,6, 15 x microscope oculars; 7,8, plane mirrors; 9, ground screen; 10, vertical suspension fiber; 11, beam; 12, torsion fiber; 13, torsion wheel; 14, vernier; 15, plane mirror; 16, lens; 17, plane mirror; 18, lens; 19, hang-down fiber; 20, pan well; 21, pan arrest.

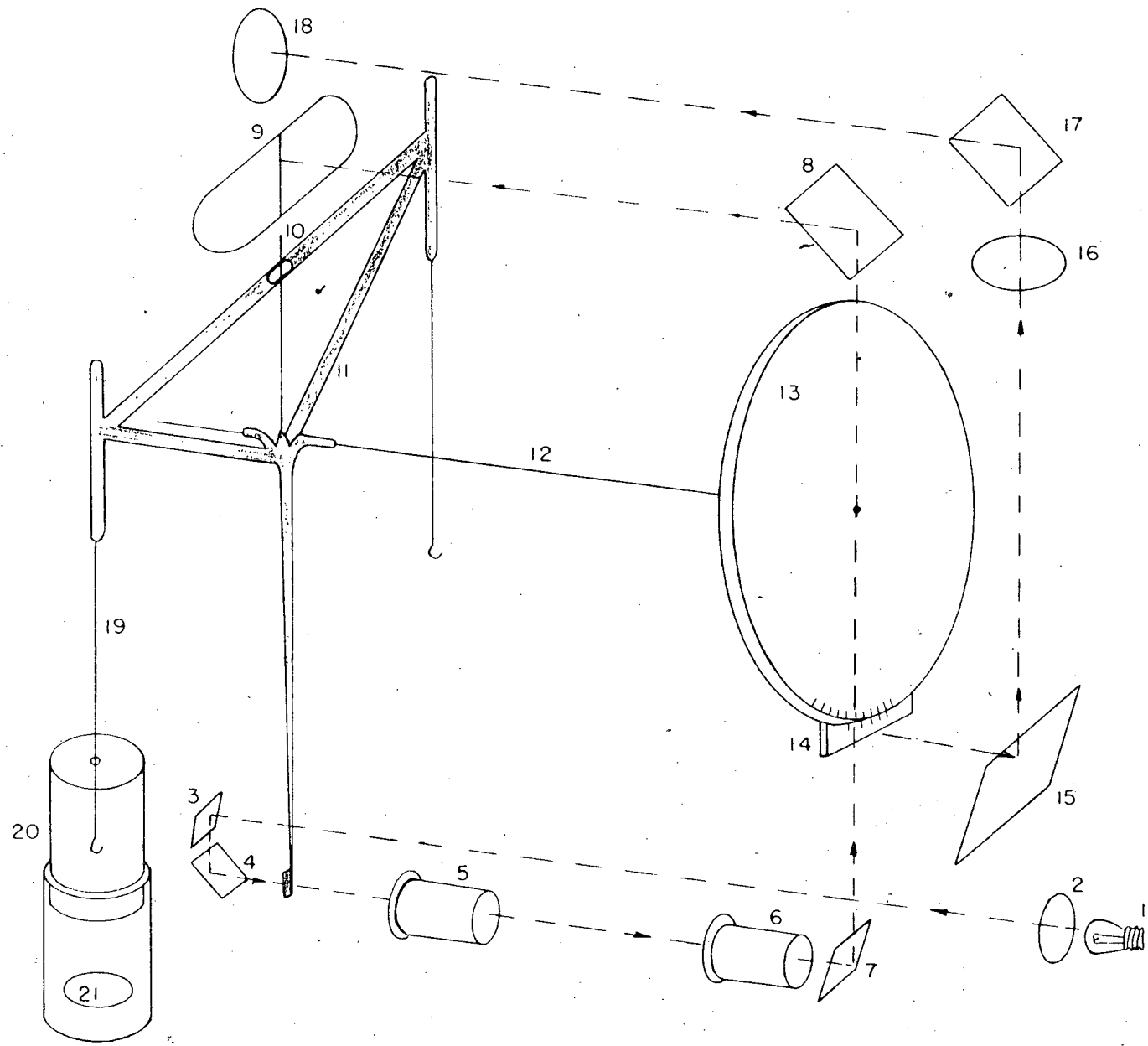

14010-1

At comparable sensibility* the three types of balances illustrated differ widely in load capacity. At 0.01 μg sensibility, for example, the load capacity of the cantilever balance is about one milligram, of the simple torsion balance about 25 mg and of the torsion balance with vertical suspension about 5 gm.

The cantilever or Salvioni balance is by far the simplest and cheapest to construct. A balance of this type was used by Cunningham and Werner[2] for the first weighings of pure compounds of plutonium. The design shown in Figure 1 has since been employed by the author and Mr. C. W. Koch[10] for weighing small samples on the milligram, as well as microgram scale. An instrument of this type may be constructed for less than $100.

The cost of construction of the torsion microgram balance of the Kirk-Craig-Gullberg[11] design varies from about $2000-6000, depending upon the degree of refinement of the various mechanisms used for the beam release, pan arrestment, optical system adjustment, etc. A number of these instruments has been constructed for use in various AEC laboratories. Their general operating reliability is excellent and they are distinctly superior in speed of weighing as compared with the conventional knife-edge microbalance. They are also less sensitive to environmental disturbances, such as vibration or changes in room temperature.

The Garner[12] balance represents a more recent development in the direction of providing an "ultra micro" balance with a load capacity comparable to that of existing knife-edge balances. One model of this instrument tested by the author showed a more pronounced tendency to drift than did a Kirk-Craig-Gullberg balance under the same environmental conditions. The Garner balance would appear capable of improvement in the design of the pan wells, which are insufficiently insulated and a source of thermal disturbances after being handled. Because of the large inertia of the loaded balance system, the Garner instrument

* See below.

must be manually damped after loading to stop the prolonged oscillation of the beam.

Theoretical equations describing the behavior of the elastic systems employed in these balances have not been published. Equations of this kind are, however, highly useful, in understanding the behavior of elastic balances as well as in solving problems of design and construction. The author has, accordingly, derived expressions relating the sensitivity of the cantilever, Kirk-Craig-Gullberg, and Garner balances to structural and load parameters. The formulae presented hold accurately for small deflections only, but may be used as rather close approximations for almost all cases of practical interest.

Before presenting the equations, it is desirable to make a distinction between the "sensitivity" and the "sensibility" of a balance. "Sensitivity" shall be defined here as the magnitude of the response of the elastic system per unit of mass of load. (In some cases it is more convenient to express the response in terms of linear displacement, and in others in terms of angular displacement.) "Sensibility" shall be defined as the minimum mass which may be detected with the balance. In general, "sensibility" will have a statistical rather than an absolute significance and will represent the threshold of detection of response. The sensitivity of a particular elastic system is fixed by specifying its geometry and load, but the "sensibility" of a balance employing this system will depend upon the method used to detect or measure the response.

If the minimum observable response is ρ_{min}, then the sensibility, M_{min}, will be related to the sensitivity S by the equation:

$$M_{min}(\text{gm}) = \frac{\rho_{min}(\text{cm or radians})}{S\left(\frac{\text{cm or radians}}{\text{gm}}\right)} \qquad (1)$$

1. <u>The cantilever balance.</u>

For a cantilever balance composed of quartz fibers of uniform circular

cross section as shown in Figure 1B,

$$S = \frac{gL^2}{3E_b\pi r_b^4}\left[\frac{4L\left(\frac{E_b\pi r_b^4}{4} + L\sqrt{\frac{E_s\pi r_s^4}{4Mg}} - hL\right) + \frac{3}{2}PE_b\pi r_b^4 - 3L^2\left(\sqrt{\frac{MgE_s\pi r_s^4}{4}} - hMg\right)}{\frac{E_b\pi r_b^4}{4} + L\sqrt{\frac{E_s\pi r_s^4}{4Mg}} - hL}\right] \quad (2)$$

where M is the load in grams, g is the gravitational constant, h* the vertical distance from the axis of the beam to the point of attachment of the suspension fiber, L the distance from the fixed end of the beam to the junction with the suspension fiber, P the length of the pointer, E_b and E_s the values of Young's modulus for beam and suspension fibers respectively and r_b and r_s are their respective radii. (For small silica fibers the value of Young's modulus varies appreciably with the diameter. Exact values may be found in chapter V of Strong's "Procedures in Experimental Physics ", Prentice-Hall, 1943).

It is evident from Equation (2) that the sensitivity is dependent upon the load. If r_s is made much smaller than r_b, however, the change in sensitivity with change in load is negligibly small.

Equation (2) has been derived upon the assumption that the deflection of the beam is very small. The deflection due to the weight of the beam itself has been neglected. For fibers of very small diameter the self deflection becomes large and imposes a practical limit on the sensitivity which can be obtained with the cantilever type balance.

The deflection at the free end of a straight horizontal fiber of uniform cross section may be computed approximately from the following equation:

$$\text{self deflection} \cong \frac{M_b g L^3}{2E_b\pi r_b^4} = \frac{\delta g L^4}{2E_b r_b^2} \quad (3)$$

where M_b is the mass of the beam, δ is the density of the beam material and the other symbols have their previous significance. For a beam of given length,

* In the equation as given h is assigned a positive value if the point of attachment of the suspension fiber lies above the central axis of the beam, a negative value if it lies below.

the self deflection is proportional to the reciprocal of the square of its radius. Because of the self deflection of the beam, the sensitivity of a quartz cantilever balance cannot be made much greater than 10^4 cm/gm.

2) The simple torsion balance.

For a simple torsion balance of the design shown in Figure 2A, the sensibility equation is:

$$S\left(\frac{\text{rad.}}{\text{gm}}\right) = \frac{gL}{\frac{\eta \pi r_t^4}{2T} - M_b d + 2Mg\left(\sqrt{\frac{E_s \pi r_s^4}{4Mg}} - h\right)} \qquad (4)$$

where g is the gravitational constant, L is the length of one arm of the beam*, η is the shear modulus for the torsion fiber, r_t is the radius of the torsion fiber and T is its length, M_b is the mass of the beam, d is the distance from the center of mass of the beam to its center of rotation, M is the mass suspended from each arm, E_s is Young's modulus for the suspension fibers and r_s their radii, and h is the normal distance from the line drawn through the points of attachment of the suspension fibers to the parallel plane passing through the axis of rotation.

Both d and h may have negative, as well as positive, values. Equation (4) holds if negative values are used when the corresponding points lie below the center of rotation of the system.

If d and h have zero or negative values the balance is stable at all loads. If d is positive and h is zero, the balance is stable at all loads for all values of d less than:

$$\frac{\eta \pi r_t^4}{2 M_b T} \qquad (5)$$

* The beam is assumed to be symmetrical about the axis of rotation and to be supported by two identical fibers of length T.

If $d > \frac{\eta \pi r_t^4}{2 M_b T}$, the balance will be unstable at all loads less than

$$M = \frac{\left(M_b d - \frac{\eta \pi r_t^4}{2T}\right)^2}{g E_s \pi r_s^4} \tag{6}$$

but will become stable above this minimum load with subsequent decreasing sensitivity with increasing load.

If h is positive and d is zero the balance will be unstable at all loads greater than:

$$M = \left[\frac{\sqrt{g E_s \pi r_s^4} + \sqrt{g E_s \pi r_s^4 + \frac{4 g h \eta \pi r_t^4}{T}}}{4 g h}\right]^2 \tag{7}$$

Below this value the sensitivity will diminish as the load is diminished.

If both d and h are positive and $d > \frac{\eta \pi r_t^4}{2 M_b T}$, the balance will be unstable except with a range of load:

$$M = \left[\frac{\sqrt{g E_s \pi r_s^4} \pm \sqrt{g E_s \pi r_s^4 - 8 g h \left(M_b d - \frac{\eta \pi r_t^4}{2T}\right)}}{4 g h}\right] \tag{8}$$

Within this range the balance will be stable, with varying sensitivity, which will approach infinity as the load approaches the maximum or minimum value. At intermediate loads the sensitivity will be less, and at some particular value of M will exhibit a minimum. The sensitivity will be a minimum when

$$M = \frac{E_s \pi r_s^4}{16 g h^2} \tag{9}$$

The minimum sensitivity will be equal to:

$$S_{min} = \frac{g L}{\frac{\eta \pi r_t^4}{2T} - M_b d + \frac{E_s \pi r_s^4}{8 h}} \tag{10}$$

3. Torsion balance with vertical suspension.

In the case of the torsion balance with vertical suspension, the vertical suspension fiber introduces an additional elastic element into the system.

The sensitivity equation is:

$$S = \frac{aL}{\frac{\eta \pi r_t^4}{2T} - M_b d + 2Mg\left(\sqrt{\frac{E_s \pi r_s^4}{4Mg}} - h\right) + \frac{\sqrt{(M_b+2M)g}\,\sqrt{E_v \pi r_v^4}}{2}} \qquad (11)$$

where E_v and r_v are Young's modulus and the radius respectively of the vertical suspension fiber.

The Garner[12] high capacity quartz microbalance is an example of a balance with a vertical suspension fiber. The Garner balance is so constructed that both d and h have negative values. It therefore is unstable except within loads between about 0.6 gm and 5 gm.

From equations (4) and (11) it is evident that either a simple torsion balance or torsion balance with vertical suspension may be constructed in such a way as to possess both high load capacity and high sensitivity. The elastic resistance of heavy supporting fibers may be largely counter balanced by making d and/or h sufficiently positive.

In the case of a simple torsion balance of high capacity designed for use as a null instrument, the heavy supporting fibers obviously cannot be used as torsion fibers. The design must be altered so that a separate torsion fiber is used to apply the torque necessary to restore the balance to the null position.

It should be emphasized, of course, that for any balance used as a null instrument the sensibility of the balance imposes a limit upon, but does not necessarily determine, the precision of weighing. The precision may depend rather, upon the precision of measuring the force required to restore the balance to null position.

Finally, a few practical points connected with the use of highly sensitive elastic balances may be mentioned.

In general, these balances are less subject to environmental disturbances than are conventional microbalances. The cantilever and simple torsion balances of the types described above operate satisfactorily in non-thermostated rooms. Although they are somewhat sensitive to vibrational disturbances, the vibrations of the balance damp out very quickly. Special mountings are not required unless the balances are exposed to continuous and rather strong vibrations.

Static electrical effects may sometimes disturb the weighings, especially in very dry weather. It is common practice to maintain an ionizing source inside the balance case. Alpha activity equivalent to about 10^6 c/m is satisfactory for this purpose.

The balances show no detectable change in sensitivity with use over long periods of time. A balance of the Kirk-Craig-Gullberg design, in use in the author's laboratory for three years, has shown no detectable change in sensitivity ($< 0.1\%$).

Although these balances are obviously fragile instruments, they are not subject to excessive breakage, even when used by relatively untrained individuals. The balance referred to above has been broken but once during the period mentioned, although eight different individuals have been trained in its use during this time. The cantilever type balances have been found to be satisfactory for class use in a course in microchemical techniques for college seniors.

Auxiliary apparatus used in weighings with the sensitive elastic balances is shown in Figure 4. Most of the pieces shown are manipulated with the aid of jewelers' forceps. Usually, the balances are loaded by hand. Occasionally they may be loaded with the aid of a simple manipulator, such as that shown in Figure 5.

Figure 4: Auxiliary Apparatus used for Microweighings.
1,2, weighing pans of thin platinum foil; 3,4, platinum and aluminum weighing tubes; 5, glass or quartz weighing tube; 6, glass weighing bottle with bead stopper; 7, quartz micromuffle with platinum outer shield; 8, jewelers forceps; 9, micro dessicator.

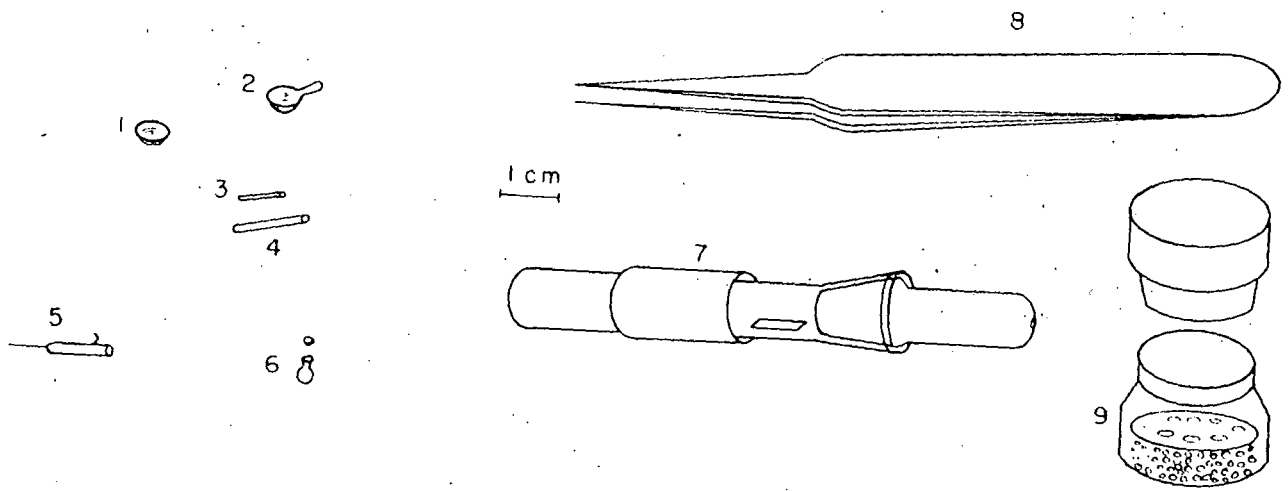
1
2
3
4
5
6
7
8
9
1 cm

B. Solution Chemistry-Microgram Scale.

1. Apparatus and General Techniques.

The apparatus illustrated in Figure 5 includes most of the pieces ordinarily used in working with aqueous solutions on the microgram scale. Equipment of this kind was found suitable for the concentration, purification and isolation of the first pure samples of plutonium,[2] neptunium,[13] americium,[14] and curium.[15]

The microscope and stage assembly are somewhat similar to the apparatus described by Benedetti- Pichler[3] for qualitative analysis on the microgram scale. At ordinary operating magnifications, however, the optical system provided by a wide field stereoscopic microscope is distinctly superior to that afforded by the Lietz binocular microscope recommended by Benedetti-Pichler. The microscope mounting and stage assembly have been modified to give greater flexibility and ease of operation. Improved precision in the measurement of reagents has been attained by the use of carefully calibrated micropipets.*

The preparation and analysis of thorium oxalate may be described in order to illustrate the techniques employed.

Five microliters of an approximately 0.003M solution of thorium nitrate in 1M HNO_3 is withdrawn from a prepared stock solution, using a one ml syringe control and a pipet of the type marked 13 in Figure 5. The pipet is then mounted in the clamp of a simple manipulator as shown in Figure 5. A 20 µl quartz cone (#5 of Figure 4) previously weighed to the nearest 0.01 µg is clamped to a metal slide which is then mounted on a mechanical stage. The cone is brought into the field of view of the microscope. The tip of the pipet is advanced to within a millimeter of the open end of the cone and carefully aligned to coincide with the central axis of

* Pipets of this type are calibrated for content by weighing the quantity of mercury delivered by the pipet. A precision of ± 0.2% is readily obtainable.

Figure 5: Apparatus for Microgram Scale Solution Chemistry.
1, microscope; 2, mechanical stage; 3, metal slide; 4, microcone; 5, micropipet; 6, syringe control; 7, micromanipulator; 8, metal stand; 9, air driven centrifuge; 10, microcones; 11, magnetic buzzer; 12, glass stirring thread; 13, graduated pipet; 14, self-filling pipet.

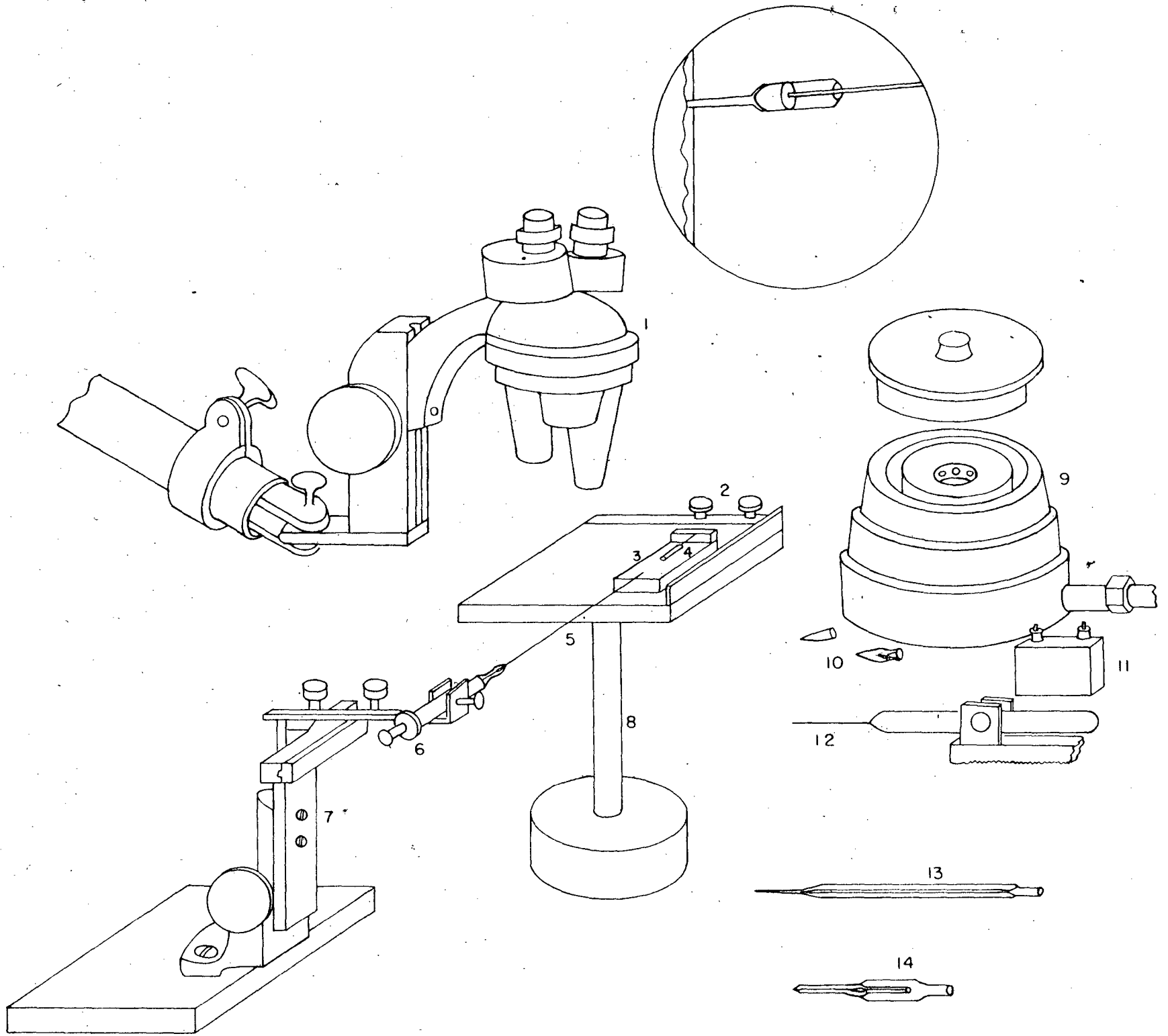

14013-1

the cone. Final adjustment is made by viewing the pieces through the microscope. The tip of the pipet is then moved inward until it is in contact with the bottom of the cone. The plunger of the control is advanced slowly by a spiral movement until some liquid is forced into the cone. Delivery is continued at a slow constant rate, the tip being gradually withdrawn as the liquid enters the cone. In this way any excessive wetting of the outside of the pipet tip is avoided. (In some cases it is advantageous to coat the tip of the pipet with a thin film of paraffin, so that it is not wet by the solution.) Complete emptying of the pipet should not be attempted, since the sudden change in pressure releases a large volume of air and the solution may spatter on the walls of the cone. All but about 1% of the solution may be safely expelled, however, and a single rinse insures essentially quantitative transfer of the solute. The pipet is withdrawn and the tip touched to a 2-3 μl droplet of 0.5M HNO_3 placed on a paraffin-coated slide. The entire droplet is withdrawn into the pipet. The pipet is then filled to the mark with water from a second droplet and again placed in the manipulator. The rinse solution is added to the cone.

Two μl of 0.6M oxalic acid are added from a second calibrated pipet and the solution is stirred by means of a magnetically activated glass stirring thread, and allowed to stand for one hour. The mouth of the cone is covered with "parafilm"* during this time. The covered cone is placed in a larger tube, also sealed with "parafilm" and centrifuged in a small air driven centrifuge (piece #9 of Figure 7). The cone containing the oxalate is returned to the stage and the supernatant liquid withdrawn carefully into a pipet with a very fine tip. The oxalate is washed with three 2 μl portions of distilled water, and then dried by directing a stream of warm, filtered air into the cone. The tube is weighed to ± 0.01 μg on a

* A semi-plastic tough paraffin-like tissue manufactured by the Menasha Products Company, Menasha, Wisconsin.

suitable balance. The oxalate is then dissolved in 2M sulfuric acid solution, transferred with rinsing to a small flat porcelain dish and titrated with an excess of standard 0.005M ceric sulfate solution, using ferrous phenanthroline indicator. A blank titration is performed to correct for the end point error. The type of buret used is that described by Sisco, Cunningham and Kirk.[16] General titration procedures on this scale have been developed by Kirk and co-workers.[5] The standard error of the titration is about ± 0.3%.

Thorium is determined on a sample similarly prepared, by igniting the oxalate to the oxide in a small platinum dish. The oxide is weighed on a quartz balance.

Obviously, a large number of common analytical operations may be carried out by techniques similar to those outlined above.

2. Solubility measurements.

Accurate measurements of the solubilities of various compounds of the synthetic elements have been obtained on very small samples, as little as a few hundredths of a microgram in some cases.[2] Such measurements are facilitated by radiometric assay of the solution in equilibrium with the solid phase. In the case of Pu^{239}, for example, as little as 0.01 μg may be determined with an error of less than 2%.

Solubility measurements on non-radioactive materials require a minimum of several micrograms of sample since, in general, precise chemical analysis cannot be carried out with smaller samples.

Apparatus designed by Stewart and Cunningham[17] for solubility measurements on very small samples is illustrated in Figure 6. Solid and solvent are placed in glass capillaries which are then sealed and attached to the periphery of a notched wheel which is rotated by means of a motor. Rotation of the wheel produces a continuous mixing of the solid and liquid phases. The wheel may be mounted in an

Figure 6: Microsolubility Apparatus.
1, support; 2, lucite wheel; 3, solubility tube; 4, drive cord.

The solubility tubes are conveniently held in place by a rubber band around the rim of the wheel.

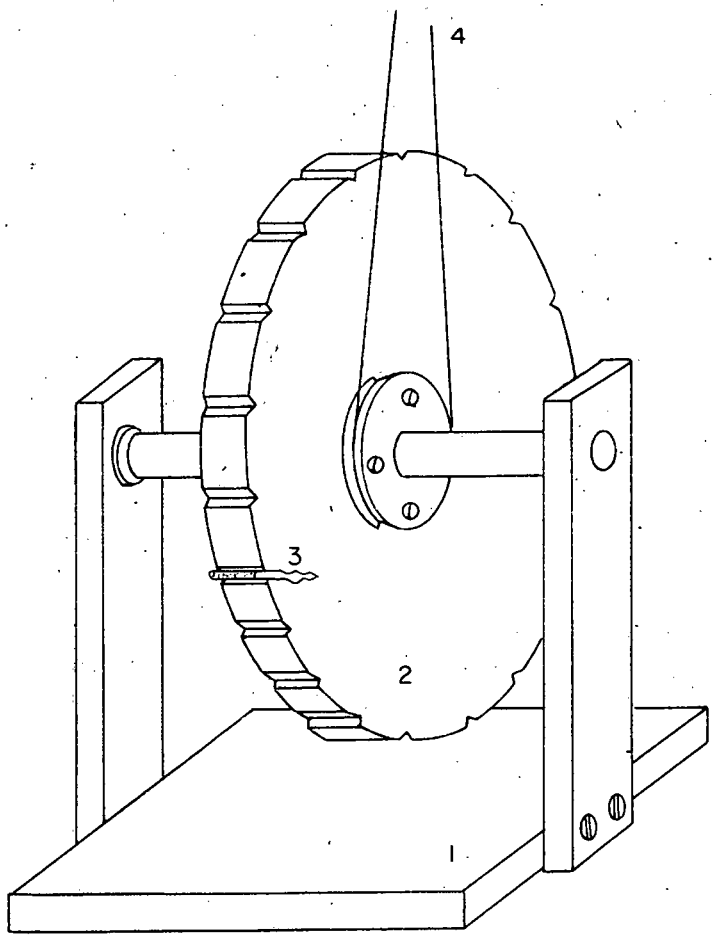
4
3
2
1

air or water thermostat if desired. Upon completion of a run the solid phase is centrifuged to the bottom of the tube, which is then broken open and samples of the supernatant liquid are withdrawn into calibrated pipets for analysis. If desired, the tube may be resealed and the run continued.

The samples of supernatant solution are spread on thin plates and dried for radiometric assay, or are used for some other type of chemical analysis. In the case of the rare earth elements, for example, some residues may be converted directly to oxides by ignition. The oxides may then be weighed on a quartz balance.

If the composition of the solid phase is unknown, it may be established in some cases by x-ray diffraction methods which require but a few micrograms of sample. (See section D-1)

3. Specific activity and half-life determinations.

The decay constants and half-lives of several long-lived alpha emitting isotopes (Pu^{239}, Np^{237}, Am^{241}) have been accurately determined by weighing microgram samples of the pure isotopes and measuring the radioactivity associated with the weighed samples.

Precise measurements of this kind require that the chemical and isotopic composition of the sample weighed be accurately known, and that the counting yield of the instrument used to measure the activity also be known.

In practice, isotopic purity may be insured, either by selection of the proper method of preparing the isotope or by reference to some method of isotopic analysis such as that afforded by the mass spectrograph or alpha pulse analyzer in the case of alpha particle emitters.

Chemical purity may be insured by extreme care in preparing the material to be weighed, by reference to spectrographic analysis* of a portion of the

* Spectrographic analysis employing copper electrodes and the spark method will detect most common impurities at a level of 0.1 μg or less.

prepared material and by repeated measurements of the specific activity following additional cycles of chemical purification.

If the isotope is weighed in the form of its oxide (as is often convenient) it may be difficult to determine the precise composition of the oxide. X-ray diffraction measurements establish the type of structure, but not necessarily the exact composition, since an appreciable fraction of the lattice sites may be vacant. This difficulty may be avoided if the isotope can be prepared and weighed in the form of metal.

The precise determination of the radioactivity associated with the sample or a known aliquot of it requires that the geometry of the counter used by known, that counting losses due to coincidence and self absorption be corrected for, that an appropriate background correction be made, and that back scattering be taken into account.

In practice, low geometry counters (geometry $< 1\%$) are used to avoid corrections due to low angle scattering of alpha particles and to minimize losses due to self absorption of the sample. Background and coincidence corrections are carefully established. The samples are mounted as thin uniformly spread layers on smooth flat plates of non absorbent material (such as platinum or quartz; the latter has the advantage that low angle scattering of alpha particles by the quartz is almost negligible). Generally, "weightless" samples are prepared for counting by dissolving the weighed sample, diluting to a known volume with residue-free reagents and mounting a very small aliquot on a plate of platinum or quartz. Uniform distribution of the sample on the plate is aided by careful cleaning of the plates before adding the sample, or by the use of organic spreading agents. The samples are then dried and ignited to a dull red heat to dry them and to burn off organic matter.

C. The Chemistry of Solid Compounds.

1. Apparatus and general techniques.

Much of the investigation of the chemical properties of the actinide and other rare elements has been carried out on solid compounds.

Success in handling very small samples of labile solid compounds requires extremes of precaution well beyond that which is adequate for successful handling of macro amounts. For example, a few micrograms of water vapor adsorbed on the walls of a tube are more than sufficient to convert a ten microgram sample of samarium trichloride to the oxychloride, whereas the same amount of water can scarcely affect the composition of a gram of the same compound.

There are three general requirements for successful work with small quantities of solid compounds:

1. A system capable of producing and maintaining reasonably high vacua (10^{-6} - 10^{-7} mm Hg),

2. Extreme care in outgassing the apparatus used,

3. Careful purification of gaseous reagents introduced into the apparatus*.

---

* Very satisfactory methods of dehydrating and purifying several common gases have been developed by Dr. A. S. Newton.[18] Very pure dry hydrogen may be produced by the thermal decomposition of uranium hydride. The hydride is made initially from uranium metal and impure hydrogen.

Helium, argon and other noble gases may be dried and rendered free of oxygen, nitrogen, CO_2, NH_3 and hydrocarbon gases by passing them over uranium metal turnings at 750° - 800° C.

Hydrogen chloride and hydrogen bromide may be almost completely freed of water vapor, oxygen and elementary halogens by passing them over the respective anhydrous uranium halides at 400° C. The uranium halides are formed in place in the drying tube by reaction of uranium metal with the hydrogen halide. (Allowance must be made for large changes in bulk density which occur when the metal is converted to the trihalide.)

Nitrogen may be purified from oxygen by passing the gas over uranium nitride at 600° C.

The original paper should be consulted for technical details concerning these methods of purification.

The types of apparatus most frequently used in the investigation of small quantities of solid compounds are illustrated in Figure 7.

The various uses of these pieces of equipment is discussed in the succeeding section.

2. Methods of Preparation and Investigation of various types of compounds.

a. Oxides.

The common oxides of the actinide and rare earth elements may be prepared by ignition in air of a few micrograms of the oxalate, hydroxide, peroxide, nitrate, etc. on a thin platinum foil, using a furnace of the type marked 9 in Figure 4. The resulting product may then be transferred to a capillary tube for examination by x-ray diffraction or other methods. The transfer of the prepared oxide is effected by using a fine tungsten needle* to pick up individual pieces of the oxide deposit. The transfer is carried out under about 15-30 x magnification, using a stereoscopic microscope. Hygroscopic or radioactive samples are handled inside a closed chamber of the design in Figure 8. The design shown is due to Westrum.[19]

Oxide intended for weighing as part of a specific activity determination is prepared in place on a thin (0.5 mil) platinum weighing pan.

If the oxide is to be used as a starting material for the preparation of other compounds (halides for example) it is prepared in finely divided form by the low temperature ignition of oxalate or hydrous oxide, rather than by the decomposition of nitrate. High temperatures ($>600^{\circ}$ C) are avoided, since this results in a less reactive form of the oxide.

Since most of the synthetic elements exhibit variable valence, more than one oxide usually is known for a particular element.

---

* These needles may be sharpened by stroking the hot metal with a lump of sodium hitrite.

Figure 7: Apparatus Commonly Used in Microwork with Solid Compounds.
A, Westrum vacuum furnace -1, 80 mil tungsten rod; 2, water cooled joint; 3, heating coil; 4, window. B, refractory crucible. C, filament type heater-1, tungsten rod; 2, tungsten or tantalum ribbon; D, double crucible system for metal production-1, outer crucible of BeO, ThO_2, TaC, etc; 2, inner crucible; 3, inner crucible lid; 4, outer crucible plug. E, platinum weighing bottle-1, body; 2, teflon washer; 3, screw cap. F, Fried's halide apparatus- 1, furnace; 2, halide sublimate; 3, quartz capillary; 4, quartz joint; 5, thermocouple. G, Lohr, Broido and Cunningham halide apparatus- 1, furnace; 2, magnetic pusher; 3, sample boat; 4, capillary; 5, thermocouple. H, microbomb - 1, steel casing; 2, quartz capillary; 3, sample. I, Broido and Cunningham gravimetric apparatus for solid-gas reactions- 1, cantilever balance; 2, pan for sample; 3, flat window; 4, microscope; 5, furnace.

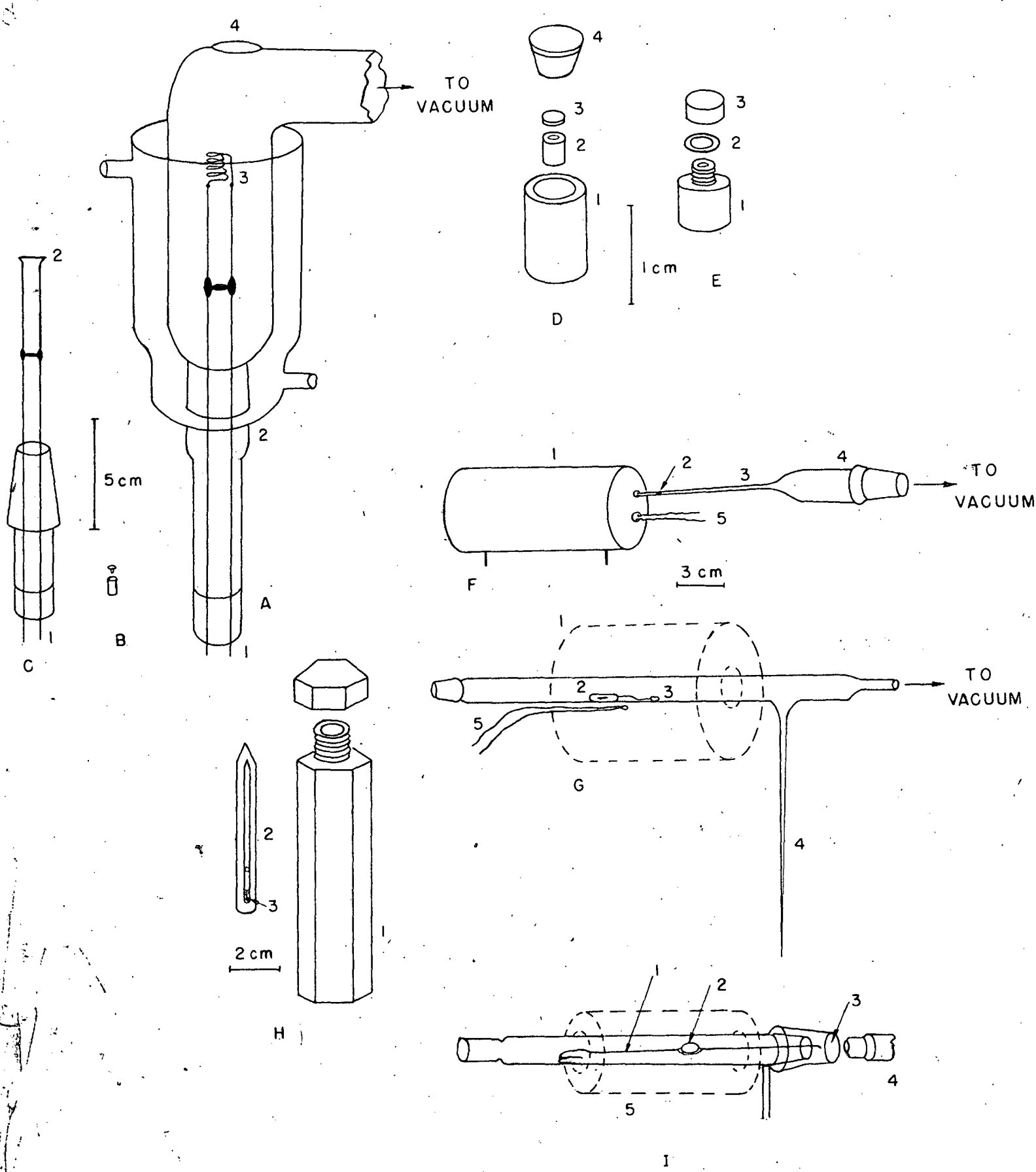
4
TO VACUUM
3
2
1
A
2
5 cm
1
C
B
4
3
2
1
1 cm
D
3
2
1
E
1
2
3
4
TO VACUUM
5
3 cm
F
1
2
3
TO VACUUM
5
G
4
2
3
2 cm
1
H
1
2
3
4
5
I

Figure 8: Dry box.
1, steel cylinder; 2, plate glass top; 3, adjustable stand; 4, vacuum, dry nitrogen valves; 5, gas lock; 6, rubber gloves.

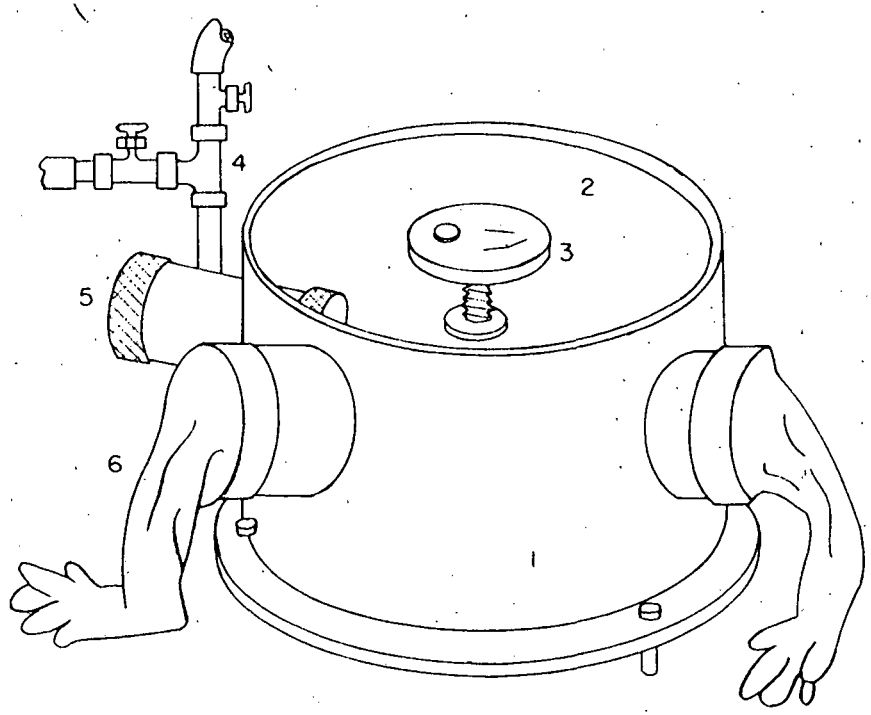
1
2
3
4
5
6

Oxides of higher average oxidation number than that obtained by air ignition have been prepared by various methods.

Gruen and Katz[20] have described apparatus suitable for the small scale preparation of higher oxides by treatment of the lower oxides with either NO or atomic oxygen. The type of apparatus used by them is illustrated in Figure 9.

Higher oxides have also been prepared by bomb methods using high pressures (100-200 atmospheres) of oxygen. The method was used originally by Fried and Davidson[21] for the attempted preparation of a higher neptunium oxide, and has been used recently by Eyring[22] for the preparation of PrO_2. The type of bomb used is depicted in Figure 7. Lower oxides have been prepared in most cases by reduction with hydrogen using apparatus similar to that marked A in Figure 7. The starting oxide is contained in a crucible of platinum, tantalum or other suitable material. The stoichiometry of the reduction may be determined by using a platinum vessel of the design shown in Figure 7C.[22] Upon completion of the reduction the hydrogen is pumped off at elevated temperatures, and the system cooled and flushed with pure dry argon. Argon is kept flowing while the vessel containing the sample is removed from the apparatus and quickly capped. The vessel is then weighed on an ordinary microbalance.

A lower oxide of americium has been prepared by thermal decomposition of the higher oxide in a platinum vessel at high temperature in high vacuum[23].

Equilibrium investigations of the thermal decomposition of praseodymium oxides have been carried out by L. B. Asprey,[24] using samples of only a few milligrams weight. The apparatus employed is illustrated in Figure 10. The general reliability of the apparatus and techniques employed was first tested by investigating the thermal decomposition of CuO. Data obtained on a 10 mg sample checked the very accurate ΔH value for the reaction: $CuO \longrightarrow 1/2\ Cu_2O + 1/4\ O_2$ reported by Randall, Nielson and West[25] to within $\pm$ 0.2%.

Figure 9: Gruen and Katz Atomic Oxygen Apparatus.
1, U tube; 2, aluminum electrode; 3, sample holder; 4, thermocouple leads; 5, heater leads; 6, trap.

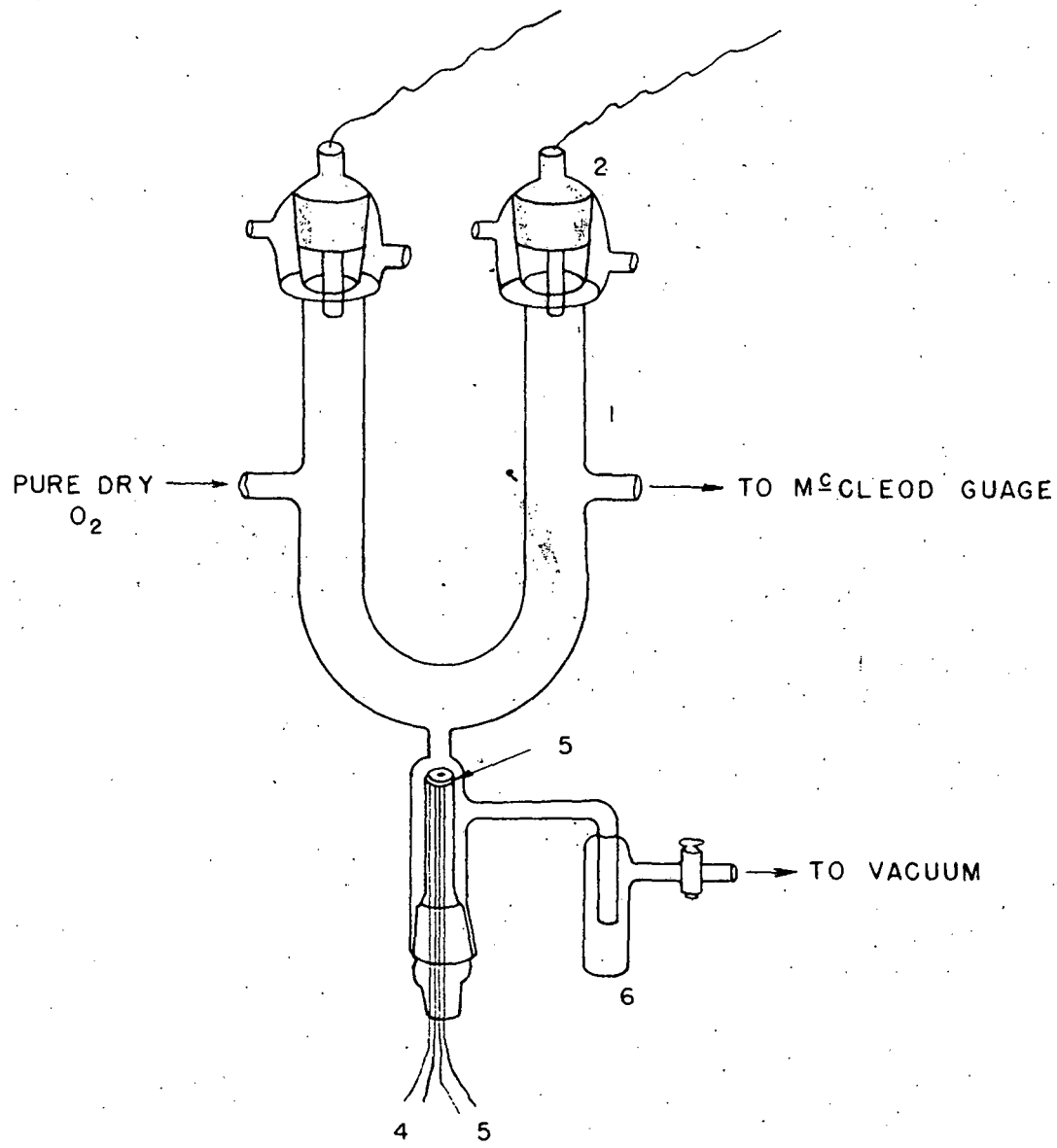
2
1
PURE DRY
O_2
TO McCLEOD GUAGE
5
TO VACUUM
6
4
5

Figure 10: Asprey and Cunningham Oxide Decomposition Apparatus. 1, induction coil; 2, outer platinum sheath; 3, platinum inner sheath; 4, thermocouple; 5, sample; 6, quartz outer tube; 7, quartz capillary tube; 8, cold trap; 9, manometer; 10, oxygen reservoir.

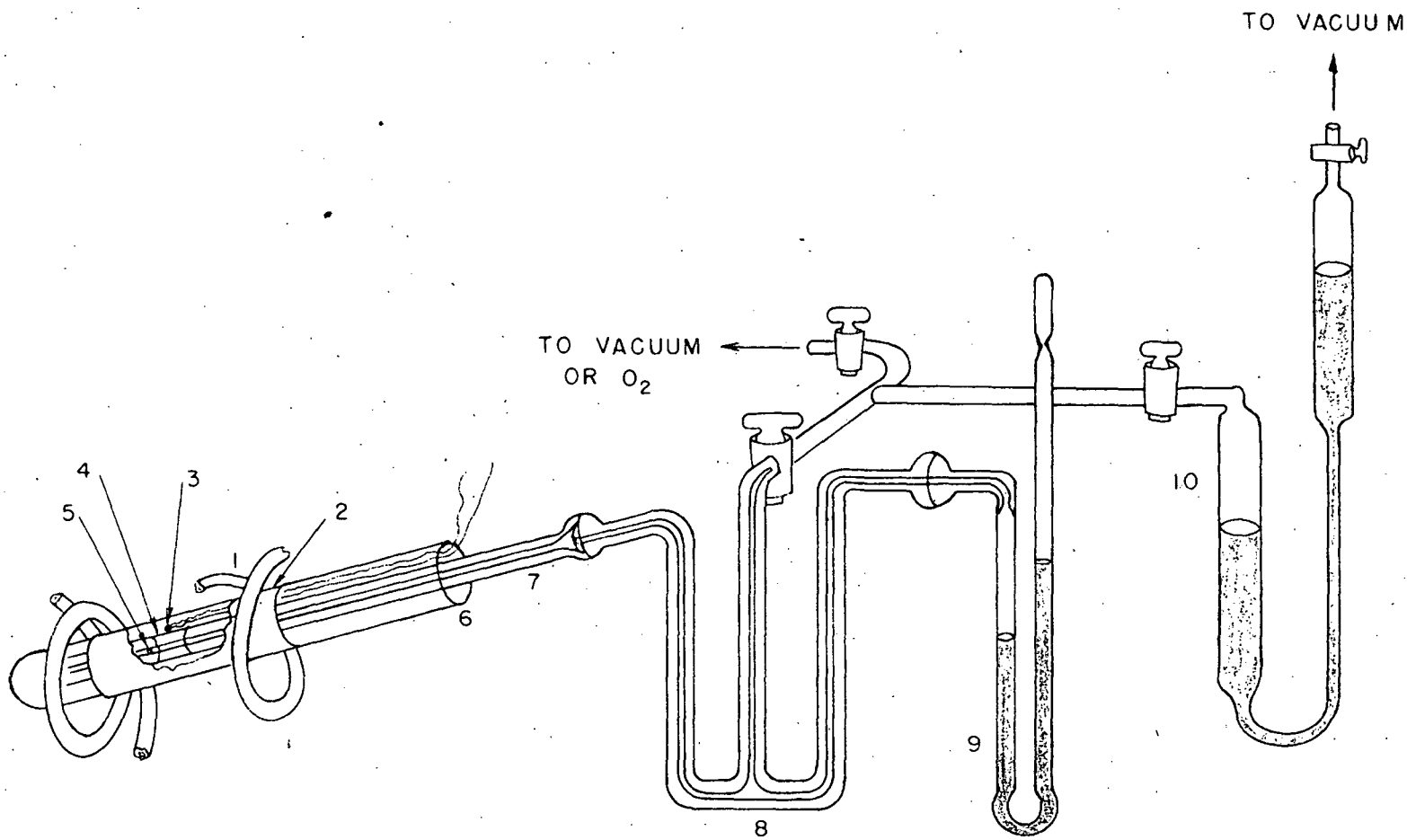

14017-1

3. Halides.

Chlorides, bromides, and iodides of the actinide elements have been prepared by several techniques suitable for very small amounts.

The apparatuses most frequently used for this purpose are illustrated in Figure 7 F,G. The design of the apparatus shown in Figure 7F is due to Fried and Davidson.[21] A few micrograms of oxide are introduced into the thin walled quartz capillary tube, which is then attached to the vacuum apparatus. The furnace is put in place, the system is evacuated and the halogenating agent admitted to the capillary which has been heated previously to an appropriate temperature.

Fried has used CCl_4 for the preparation of chlorides from oxides and $AlCl_3$, $AlBr_3$ and AlI_3 for the preparation of chlorides, bromides and iodides from oxides. In the latter case, the aluminum halide is sublimed in substantial quantity onto the oxide, the capillary is sealed, enclosed in a jacket of heavier tubing and heated at 500° C for several hours. The capillary is then sealed with apiezon wax into a larger tube in such a way that the tip projects into the bore of an open stopcock which communicates with a vacuum system. When the stopcock is turned the tip of the capillary is broken. Fractional sublimation of the reaction products is then carried out in vacuum.

At the completion of the run the section of capillary containing the halide sublimate is sealed off.

4. Oxyhalides.

Oxyhalides of the actinide and rare earth elements have been prepared by thermal decomposition of the hydrated halides and by the vapor phase hydrolysis of the anhydrous halides in a mixture of H_2O and HCl vapor. The latter method is suitable for an investigation of the equilibria involved in reactions of this type. Two types of apparatus employed by Broido and Cunningham[26] in an investigation of the vapor phase hydrolysis of rare earth trichlorides are

shown in Figure 7. Samples of the product may be removed from the system without interruption of the gas flow, using the apparatus depicted in Figure 7G. The progress of the reaction between a solid and gas may be followed quantitatively, using the apparatus shown in 7I.

5. Sulfides, nitrides, carbides and silicides.

Sulfides of several of the actinide elements have been prepared by treating oxides or halides with H_2S or mixtures of H_2S and CS_2 in quartz tubes at elevated temperatures, using apparatus somewhat similar to that shown in Figure 7E.[21]

Plutonium nitride has been prepared by treating the trichloride in a platinum vessel with NH_3 gas at elevated temperatures,[27] or on a still smaller scale by heating pieces of metal on a platinum filament in the presence of anhydrous ammonia.[27]

Plutonium silicide has been prepared in micro amounts in a system similar to that shown in Figure 7A, by heating a mixture of the trifluoride with calcium silicide.[28]

6. Hydrides.

Hydrides of various actinide metals have been prepared and investigated in an apparatus of the design shown in Figure 11. The design shown is similar to that devised originally by Baumbach.[29] Hydride formation has frequently been used as a test to distinguish true metals from metallic looking lower oxides.

The apparatus shown is suitable for a quantitative investigation of the pressure-temperature-composition relationships in the metal-hydrogen system. Hydride is formed at a suitable temperature, with the mercury droplet confined to the depression in the glass elbow. The joint is then rotated, plugging the capillary above the sample with the mercury droplet. The sample is then heated. When the pressure of hydrogen above the sample exceeds the pressure of hydrogen above the droplet, the mercury moves upward.

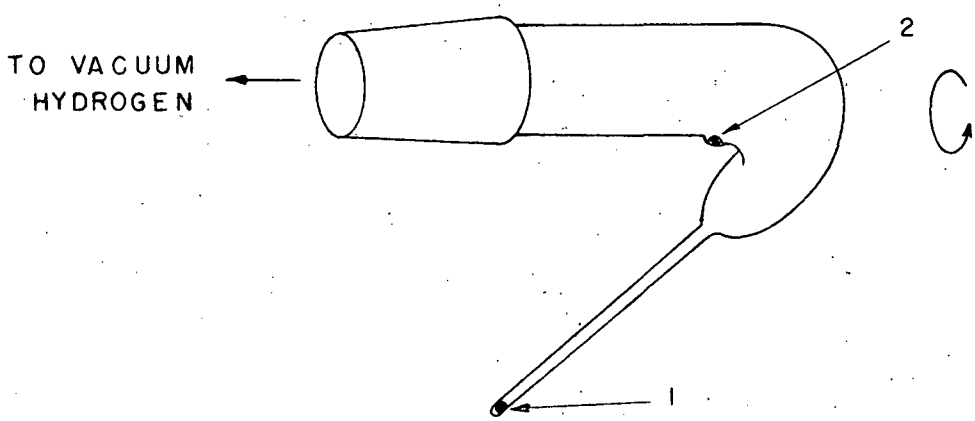
TO VACUUM
HYDROGEN
2
1

7. Metals.

The preparation and investigation of the synthetic and other rare elements in metallic form has been an important part of the general study of the properties of these elements. A method for the microgram scale preparation of the actinide metals was devised originally by H. Baumbach and P. L. Kirk[30] and has been improved by Westrum and others. The improved method has been described by Fried and Davidson.[21] The apparatus employed is shown in Figure 7A,B.

A charge of suitable compound (halide, for example) is placed in the bottom of a small, previously outgassed, inner crucible which is then closed with a loose fitting cover. The inner crucible is inserted into the larger, outer crucible, (also previously outgassed) a small piece of reductant metal is added and the outer crucible is closed by a channeled plug. The assembly is supported in the interior of a tungsten heating coil, which is surrounded by a radiation shield. Shield, coil, and crucible assembly are inserted into a vacuum line as shown, and pumped down to a pressure of 10^{-5} - 10^{-6} mm Hg. The crucible is heated electrically to a suitable temperature, volatilizing the reductant metal, the vapor of which reacts with the halide to yield metal and reductant halide. The slag formed is largely absorbed in the refractory material. If the reduction is carried out above the melting point of the product metal the entire yield will usually be obtained in the form of a very few pieces.

The metal is removed from the crucible in a dry box and is freed of surface contamination with suitable needles and scrapers. These operations are carried out under a low power microscope. If the crucibles are carefully prepared inclusions of refractory material in the metal are rare. The clean metal is mounted in "lucite" or similar material for grinding and polishing and examination by the usual methods of metallurgical microscopy. Alternatively it may be used for measurements of the heat of solution, for observations of the melting point, determination of density, etc.

Various tests may be applied to determine the purity of the metal prepared by the method outlined above.

Hydrogen evolution from a weighed sample dissolved in dilute acid may be used as a method of assay. Micro apparatus suitable for this purpose is shown in Figure 12.[31] The method is subject to a number of errors. The solution in the apparatus must be saturated with hydrogen prior to a run. Local depletion of hydrogen ion may produce hydrolysis and coating of the metal so that the reaction is incomplete. Appropriate corrections must be applied for the vapor tension of the solution. and, for accurate measurements on micro samples, for the radius of curvature of the bubble of hydrogen. The sensitivity of the method depends upon the difference in hydrogen equivalent of the metal and that of the impurities present.

Reversible hydride formation is frequently used to distinguish between poorly agglomerated metal and metallic appearing lower oxides.

Spectrographic analysis of the samples of 10 - 50 μg weight is suitable for the detection of many common impurities.

D. Various physical Methods and Measurements.

1. X-ray Diffraction.

X-ray diffraction patterns by the powder method may often be obtained with a few micrograms of material. Compounds of relatively simple structure yield fewer and more intense lines, and in favorable cases have been identified at the level of less than 1 microgram. The background produced by scattering of the x-rays by the material in which the sample is mounted is the most common factor limiting the production of an observable pattern.

The electromagnetic radiation associated with radioactive materials causes darkening of the x-ray film and in some instances severely limits the quantity of material which may be used for x-ray diffraction.

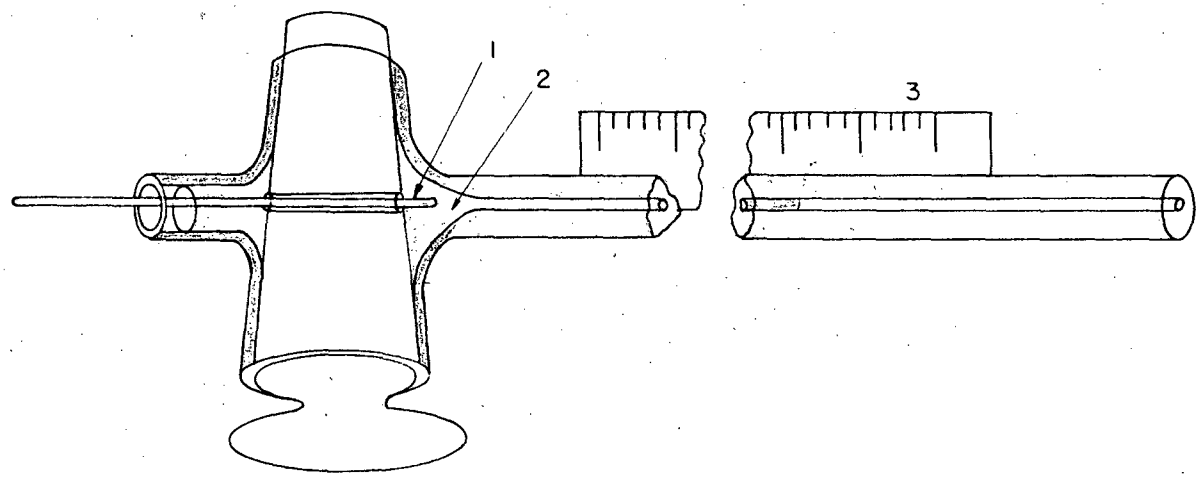

14005-1

The preparation of quartz (or pyrex) capillary tubes suitable for the x-ray diffraction investigation of various compounds of the synthetic elements has been discussed by Fried and Davidson.[27] The prepared capillary should have an I. D. of not more than about 150 μ and a wall thickness not greater than about 10 μ. The end is sealed off in a small flame. Excessive thickening of the quartz at the sealed end must be avoided.

Non-reactive samples may be mounted in a droplet of "Duco" or other organic cement stuck on the end of glass fiber.

In the absence of other information diffraction patterns obtained by the powder method are not unequivocal indications of chemical composition. The presence of several percent of other phases frequently cannot be observed; compounds of quite different composition may yield identical structures and nearly the same lattice constants; complex structures are not readily identified, and random lattice deficiencies are not directly observable. Nevertheless, the method is a convenient and reliable one for distinguishing between reasonable alternative compositions and very frequently enough additional information is available to make the identification virtually positive. An important advantage is that the sample is not destroyed by this method of analysis.

2. Absorption spectra.

Absorption spectra may be obtained with most conventional apparatus on much smaller samples than those customarily employed, by suitably altering the dimensions of the absorption cells. In most instruments the incident light beam is much narrower than the cells usually employed. The use of narrower cells permits a corresponding reduction in the quantity of material required for the determination of the spectrum.

Micro absorption cells, suitable for use with the Beckman model DU spectrophotometer are shown in Figure 13.

Figure 13: Absorption cells.
A- Laminar type. B - Kirk-Rosenfels-Hanahan type -1, teflon and plug; 2, window; 3, filling port; 4, teflon body.

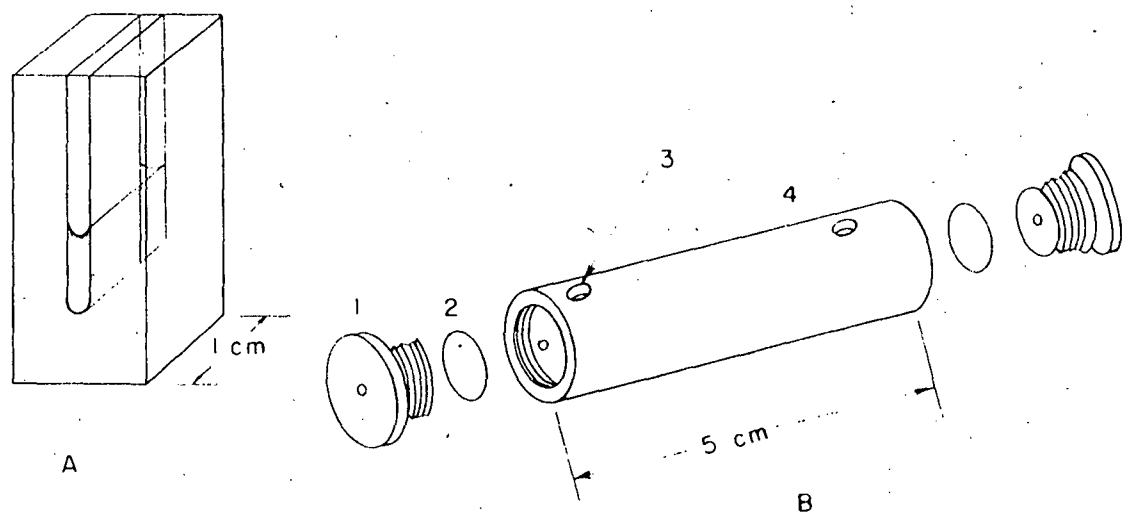

14 019-1

The capillary type cell is that devised by Kirk, Rosenfels and Hanahan[32] who have described quantitative methods of colorimetric analysis for a number of common elements on the milli-microgram (0.001 μg) scale. A special carriage* must be used with these cells, since they require very accurate alignment with the light beam from the spectrophotometer.

Cells of type A, Figure 13, may be used with the carriage ordinarily supplied with the Beckman Model DU. These cells are available commercially.** The quantity of material required to fill the cell is only about 1/10 that necessary for the regular 1 cm cells.

The absorption spectra of solid compounds (actinide and lanthanide halides) have been obtained by Freed and Leitz[34] with samples weighing only a few micrograms, disposed on the walls of a thin quartz capillary tube. The method employed was to use a microscope to project a magnified image of microcrystals of the halide onto the slit of a prism spectrograph.

Jones and Conway[34] have used a microscope to project an image of rare earth crystals onto the slit of a Baird 3 meter grating spectrograph, in order to investigate the fine structure of the absorption spectra of these compounds. With glass optics the spectral range is limited to the region 3600 A° - 3μ.

3. Magnetic susceptibilities.

Methods have been devised for measuring the magnetic susceptibilities of very small amounts of substances of moderate susceptibility, or of moderate amounts of substances of low susceptibility. Three designs of apparatus are shown in Figure 14A, B, C. Design A is suitable for the examination of solutions or other liquids and was employed by Howland and Calvin[35] to measure the susceptibilities of various aqueous ions of the actinide elements, as an aid in deter-

---

* Obtainable from Microchemical Specialties Co., Berkeley, California.

** from Pyrocell Manufacturing Co, New York City.

Figure 14A: Apparatus used by Howland and Calvin to Measure the Magnetic Susceptibility of Aqueous Ions of the Actinide Elements.
1, 140 cm glass suspension fiber; 2, thin wall capillary with central partition; 3, pointer; 4, magnet pole face (only one shown); 5, mirror; 6, microscope; 7, filar micrometer.

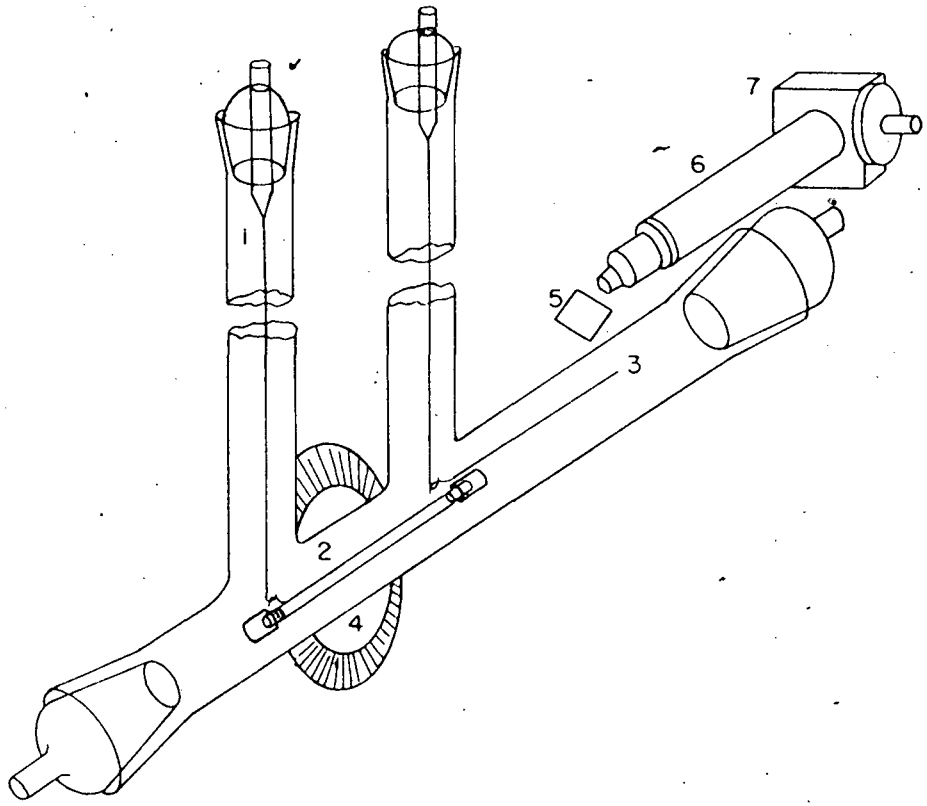

14020-1

Figure 14B: Cunningham and Wallmann Magnetic Susceptibility Apparatus for Solids. 1, 5 inch Alnico #5 magnet; 2, specially cut pole piece to give uniform $\frac{dH}{dx}$; 3, quartz frame; 4, torsion fiber; 5, torsion wheel; 6, pointer; 7, sample tube; 8, microscope.

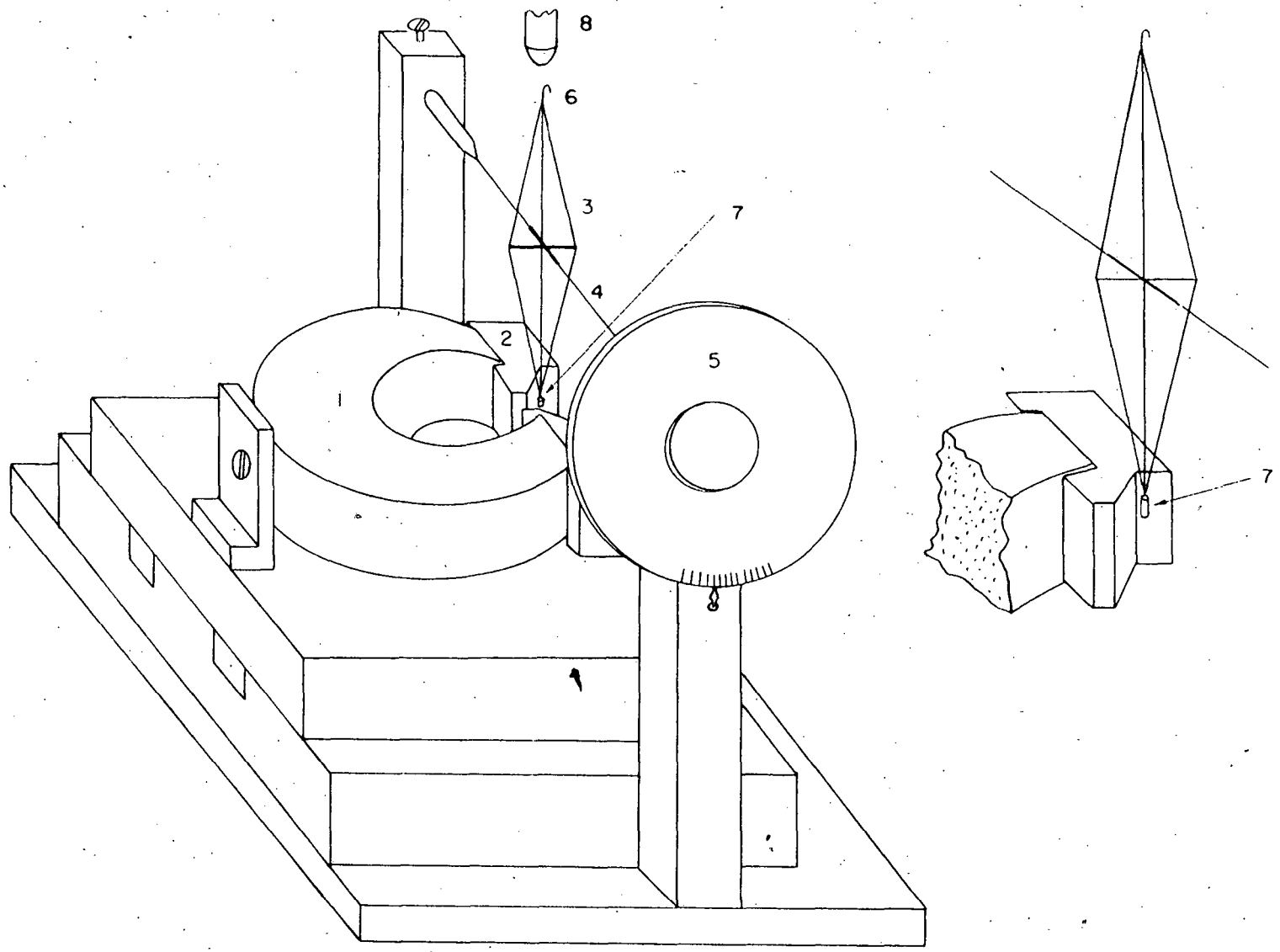

14021-1

Figure 14C: Magnetic Susceptibility measurement Using a Sensitive Quartz Torsion Balance and an Inhomogeneous Field.
1, magnet; 2, pole piece (only one shown); 3, sample; 4, torsion balance.

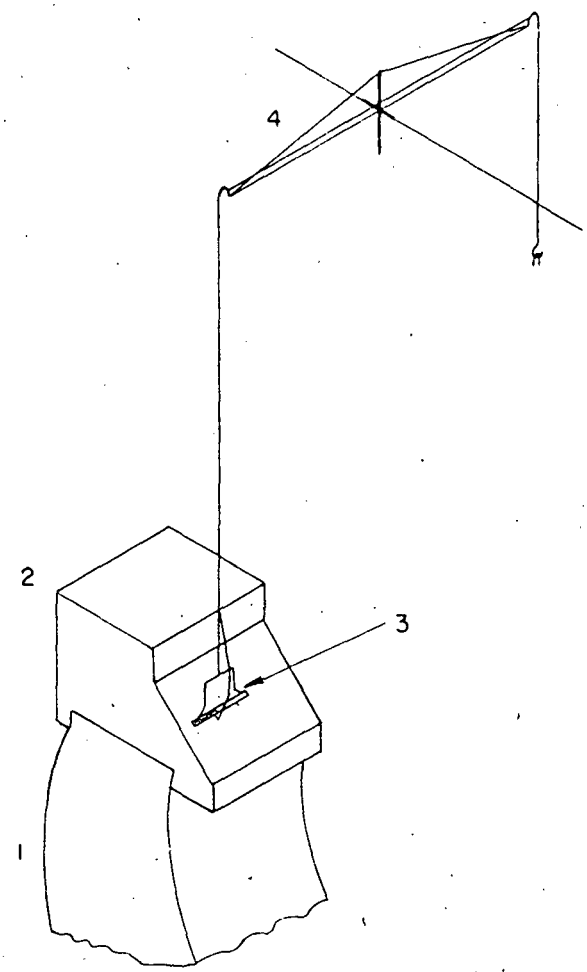
4
2
3
1

mining their electronic structures.

The apparatuses shown in Figure 14B,C were designed by Cunningham and Wallmann[36] for rapid room temperature measurements of the susceptibilities of milligram samples of solid compounds of the rare earths and actinide elements. The inhomogeneous field principal is employed. The apparatus is simple and capable of good accuracy.

4. Thermochemical measurements.

Many of the developments in the field of microcalorimetry up to 1945 have been reviewed by Swietoslowski.[37]

A semimicro and a microcalorimeter especially suitable for thermochemical investigations of the synthetic elements have been designed by Professor E. F. Westrum, Jr.[38] and have been extensively employed for this purpose in the AEC laboratories at Chicago and Berkeley. The microcalorimeter is of a semi-adiabatic type with exceptionally low heat capacity.

The principle features of the microcalorimeter chamber and surrounding jacket are indicated in Figure 15. The instrument is sensitive to 10^{-4} cal. Accurate heats of solution of several actinide metals have been obtained with fractional milligram samples. With this instrument it has been found possible to check the accurately known heat of solution of magnesium metal to within $\pm$ 0.1% using samples as small as 100 μg.

In common with most instruments of this type precise measurements can be obtained only when the heat change being measured occurs rapidly, preferably in less than five minutes. However, the instrument has given fairly accurate results in measuring the heats of solution of samples of certain oxides, which require somewhat longer times to dissolve. (7 - 10 minutes)[22]

5. Vapor pressure measurements.

Vapor pressure measurements by the effusion technique have been carried out with small quantities of various radioactive materials. The vapor is

Figure 15: Microcalorimeter Chamber and Submarine Jacket.
1, stainless steel outer jacket; 2, tantalum calorimeter chamber; 3, resistance thermometer and heating element; 4, sample bulb; 5, stirrer; 6, stirring shaft; 7, cap for calorimeter chamber; 8, cap for submarine jacket; 9, resistance thermometer leads.

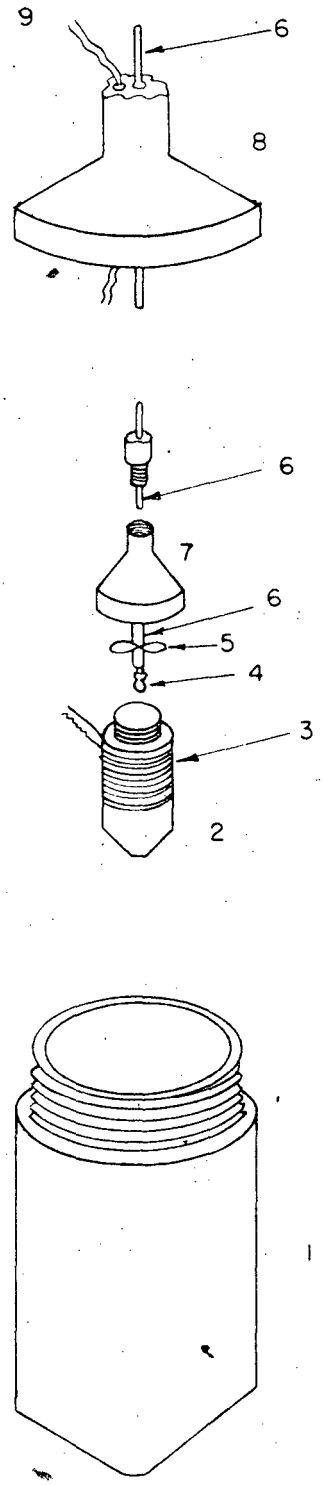
9
6
8
6
7
6
5
4
3
2
1

collected on plates suitable for direct radiometric assay of the vapor deposit. Apparatus suitable for vapor pressure measurements by this technique is shown in Figure 16. The design is due to Westrum and Wallmann.[39]

Extremely precise measurements of the vapor pressures of various plutonium halides have been obtained by Phipps, Simpson and Seifert,[40] using more elaborate apparatus.

6. Melting point.

Various micro melting point apparatuses for moderately low melting substances are well known and need not be discussed. Most of the compounds of the synthetic and rare elements have relatively high melting points, however. Apparatus suitable for observing melting points up to about 1000° C is shown in Figure 17A,B.

One of the principle difficulties encountered in determining the melting points of high melting substances is that of providing a container or support which will not react with the sample at the high temperatures employed.

The melting points of small samples of reactive metals may be difficult to observe because of an oxide coating formed by reaction with oxygen or water desorbed from the sample support as the melting point is approached. The mechanical effect of the oxide coating in preventing observation of the melting has been overcome by Westrum and Eyring[41] by mounting the sample under slight tension between the jaws of a tungsten hair pin, as shown in Figure 17B.[41]

7. Density measurements.

The densities of non-porous solids may be determined by a micro modification of the classical pycnometric method, using a capillary cell such as that shown in Figure 18. The method was devised originally by P. L. Kirk.[42] The design of the cell shown is due to S. Katz.[43] The addition of a weighed amount of solid to the capillary tube produces a displacement of the liquid meniscus.

Figure 16: Westrum and Wallmann Vapor Pressure Apparatus.
1, tungsten leads; 2, water cooled joint; 3, heating coil; 4, effusion vessel; 5, magnetically operated shutter; 6, plate holder; 7, iron bar sealed in glass; 8, anchor rod.

Inset shows enlarged view of tantalum effusion vessel.

In operation, the sample is heated to an appropriate temperature with the shutter closed, a sample plate is moved into position above the collimating hole by using an external magnet to move the plate carriage. The shutter is opened for a measured time, and then closed. A second plate may then be moved into position and so on. The quantity of vapor collected on each plate is measured by radiometric assay.

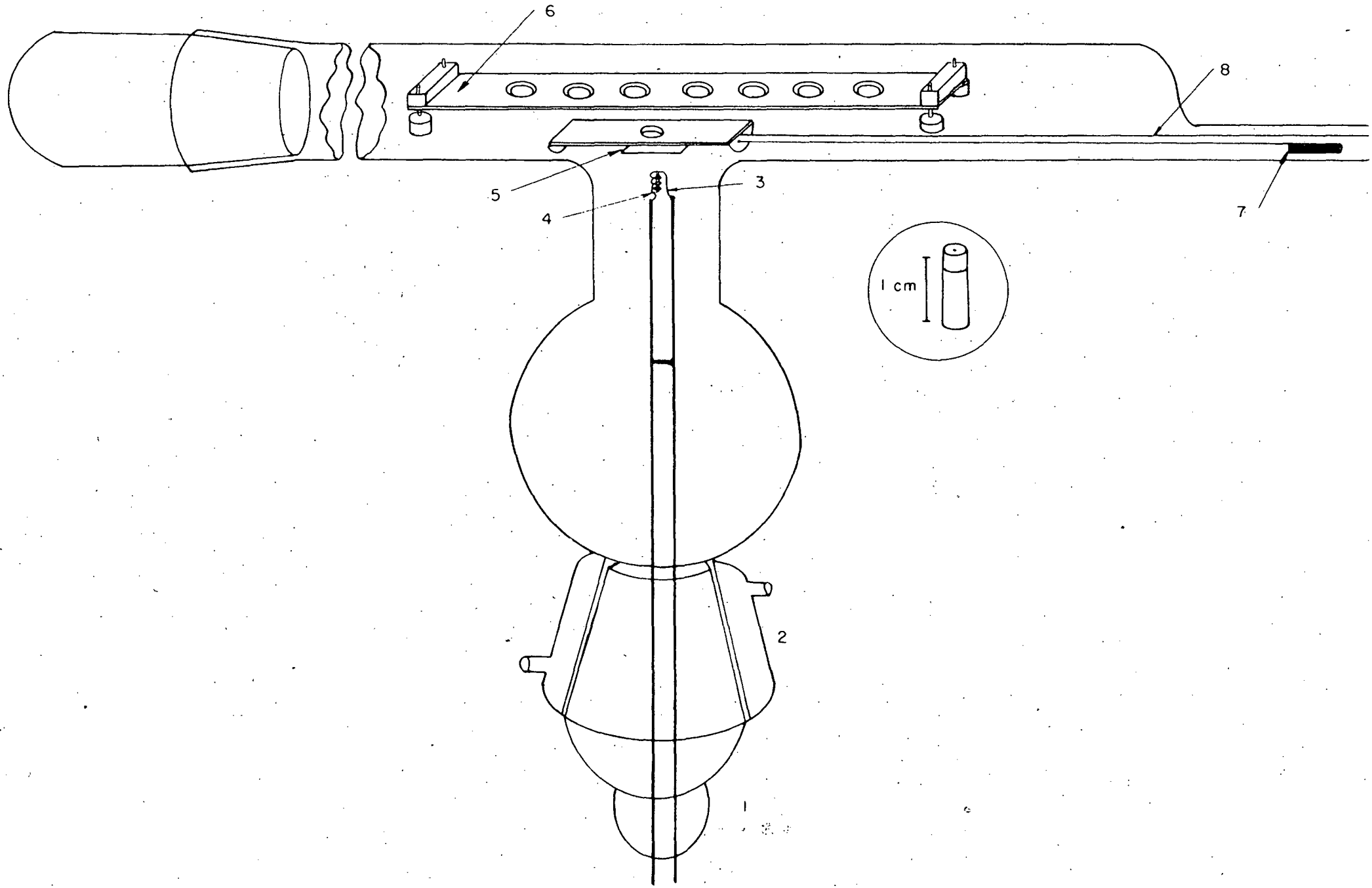

14024-1

Figure 17: Melting Point Apparatus.
A, Nickel Block Type - 1, thermocouple leads; 2, resistance wire; 3, nickel cylinder; 4, illumination port; 5, asbestos insulation; 6, capillary containing sample; 7, microscope.

Inset shows enlarged view of capillary and thermocouple.

B, Hairpin type-1, tungsten hair pin; 2, support rod; 3, thermocouple; 4, sample.

An enlarged view of the jaws with sample in place is shown in the inset. The sample is heated by a surrounding coil of tungsten wire (not shown) and is observed with a low power microscope.

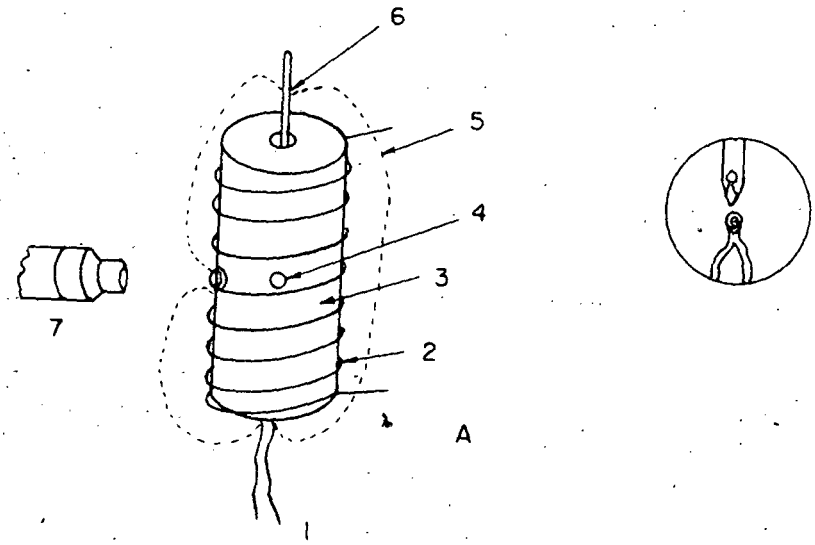
6
5
4
3
2
7
1
A

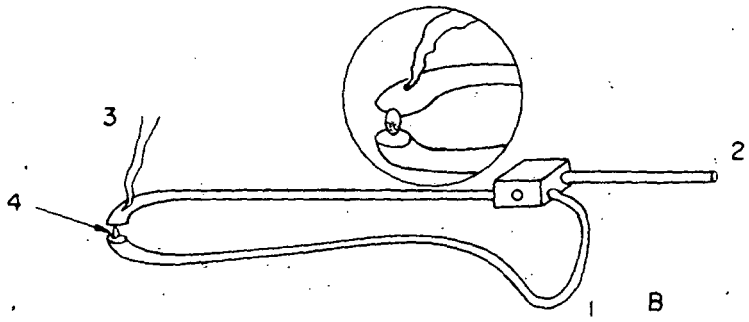
3
2
4
1
B

Figure 18: Capillary cell for measuring the Density of very Small Solid Samples.
1, sample; 2, liquid.

The top and bottom faces of the cell are ground and polished to give an optically flat surface.

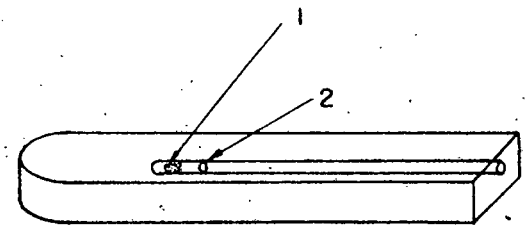

14026-1

The displacement is measured with reference to a fiducial mark, using a filar micrometer. A few hundredths of a microliter of solid phase is sufficient for a volume measurement accurate to a few percent.

E. Protection of Personnel Handling High Level of Radioactivities.

Most of the work with the synthetic elements which has been described above involved handling very high levels of alpha radioactivity. Such levels of radioactivity, particularly when in the form of finely divided solid materials present a very serious physiological hazard. Proper protection of research personnel against this hazard is essential. The guiding principle which has proved most satisfactory as a method of protection has been to carry out all operations with such materials inside a closed system.

The general design of a box suited to micro work with high levels of alpha radioactivity is indicated in Figure 19.

Where work must be done in more elaborate apparatus, a closed box of some light constructional material is erected around the equipment. The box is fitted with a suction hose equipped with filter and blower and vented in a suitable location, such as the flue of a fume hood. The suction maintains the pressure inside the box slightly below that of the surrounding atmosphere. Suitable windows and doors of "lucite" or other plastic are included in the box as needed. Holes admitting outside pipes, vacuum lines, etc. are caulked with rubber or cellophane tape.

II. Semi-micromethods Used in Bombardment Work.

A. Apparatus and General Techniques.

It has become widely recognized in the last few years, that semi-micromethods of analysis are superior in several respects to the conventional macro methods. Their chief advantage lies in the improved speed and efficiency obtainable

Figure 19: Box for Working with Radioactive Materials.
1, control panel; 2, fluorescent light; 3, inlet tubes for gaseous reagents (SO_2, NH_3, etc.); 4, reagent shelves; 5, heat lamp; 6, electrical outlet; 7, clinical centrifuge; 8, glove port; 9, door with air filter panel; 10, filter box.

The box is of plywood construction with a removable sloping glass front and stainless steel bottom tray. The front bay is provided with a lucite top with glass inset, useful for examining small samples with the aid of a low power microscope.

More elaborate models contain additional fittings and a well or recess for the centrifuge.

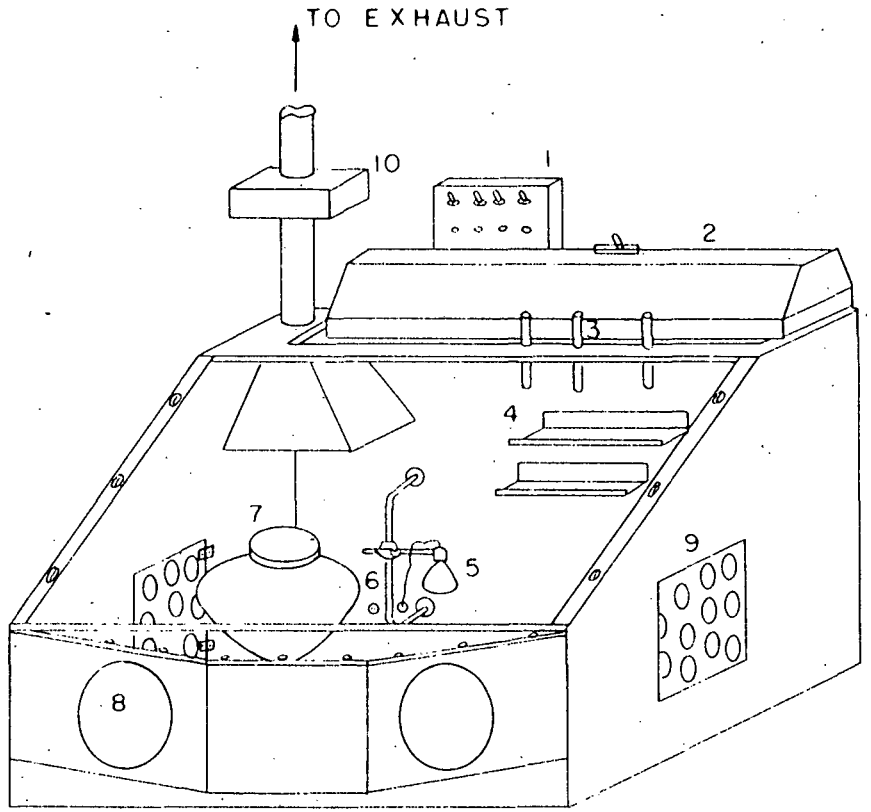

14027-1

by use of the small scale methods. Such methods have been used for several years in investigating nuclear reactions induced by artificial means. The advantages of increased speed in effecting chemical separations are particularly evident in work on spallation reactions at high energies where the product nuclei may be distributed among a dozen or more elements.[44]

Identification of the various individual nuclear reactions involved requires that each product isotope be identified both as to mass number and atomic number. Chemical separations effect a preliminary sorting of the isotopes according to the atomic number. Mass numbers may then be determined by other means, particularly by an investigation of radiation characteristics or by establishing genetic relationships to known isotopes.

If the preliminary sorting is slow many short lived isotopes will have decayed before this step is completed and knowledge of the reactions involved will be incomplete. Speed in the chemical separations is therefore of great importance. Figure 20 illustrates the principal pieces of apparatus used for rapid semi-micro separation methods.

Since the apparatus employed is small and the quantities of reagents used are correspondingly small, all of the materials necessary for a number of chemical separations may be inclosed in a box roughly similar to that shown in Figure 19. The development of boxes of this kind for handling radioactive materials is due largely to Mr. Nelson Garden and the Health Chemistry Group of the Radiation Laboratory at the University of California. If high levels of β and γ activity are to be handled, additional shielding of lead may be placed around the box. The use of lead glass windows and the substitution of mechanical manipulators for the gloves shown, provides adequate protection against all but exceptionally high levels ($>$ 0.5 curies) of β and γ activities.

Similar boxes in which a series of elaborate chemical operations may be carried out on the curie level have also been designed by Mr. Garden and his group.

Figure 20: Semimicro Apparatus.
1, clinical centrifuge; one ml syringe control; 10 ml syringe fitted with rubber stopper adapter; 4, calibrated pipet; 5, transfer pipet; 6, fifteen ml graduated cone; 7, platinum stirring rod; 8, dropping bottle; 9, fifty ml wash bottle; 10, pipet cleaner; 11, heat lamp; 12, block supporting sample plates.

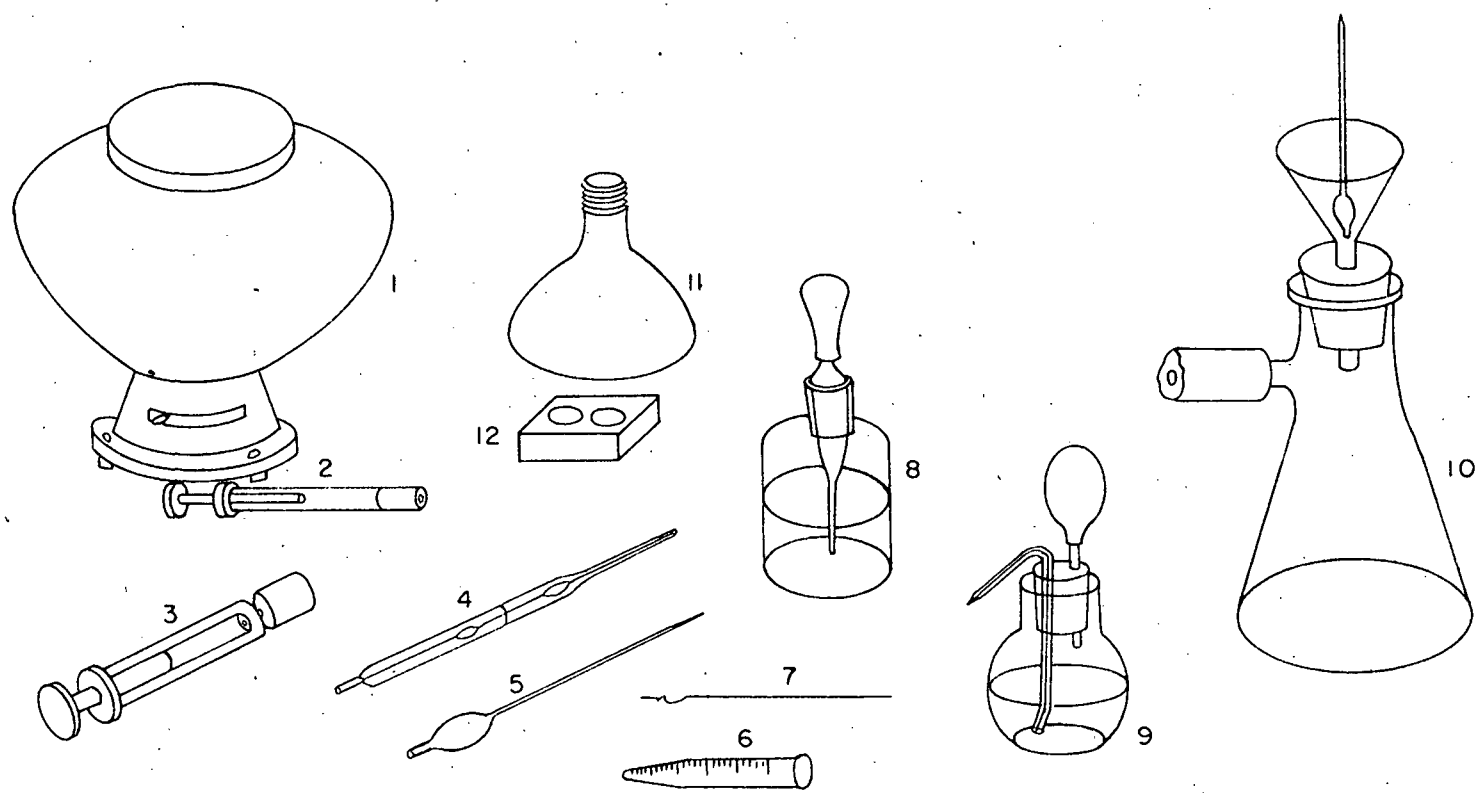

14028-1

B. Microtarget for Cyclotron Bombardments.

In the case of the cyclotron, and other particle accelerating devices the beam in the target area is considerably more concentrated at the center than at the edges. If a limited amount of material is available for bombardment, a higher specific activity may be obtained per unit of bombardment time by confining the target material to the more intense area of the beam, providing that the material so disposed still behaves as a "thin" target. The design of a micro interceptor target, based on this principle, is shown in Figure 21. The target has been used by Thompson, Ghiorso and Cunningham[45] for bombardments of the actinide elements. In practice elaborate precautions must be taken to protect the research personnel and the cyclotron from contamination with the alpha active target material. A successful solution to this problem, without which the bombardments referred to could not have been made, was achieved by the use of a very ingenious apparatus designed by Malcolm Webb[46] of Dr. J. G. Hamilton's group at the Radiation Laboratory.

This work was performed under the auspices of the Atomic Energy Commission.

Figure 21: Platinum Micro Interceptor Target.
1, sample holder; 2, cap ring; 3, thin foil cover welded to ring.

During bombardment the shank of the target is screwed into a water cooled block (not shown).

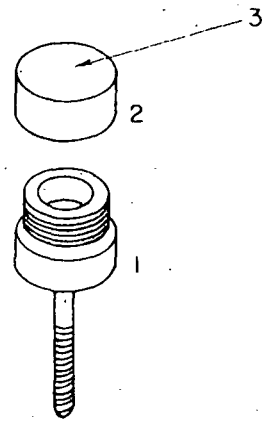
3
2
1

Bibliography

1. G. T. Seaborg, Chem. and Eng. News 23, 2190 (1945).

2. B. B. Cunningham and L. B. Werner, J. Am. Chem. Soc. 71, 1521 (1949).

3. A. A. Benedetti-Pichler, "Microtechnique of Inorganic Analysis", John Wiley and Sons, Inc., New York, N. Y. (1942).

4. M. Cefola, Ph. D. Thesis, New York University (1941).

5. P. L. Kirk, Ann. Rev. Biochem. 9, 593 (1940).

6. B. D. Steele and K. Grant, Proc. Roy. Soc. (London) A82, 580 (1909).

7. Hans Pettersson, Thesis, University of Stockholm (1914).

8. W. Ramsey and R. Whytlaw-Gray, Proc. Roy. Soc. (London) A84, 536 (1911).

9. E. Salvioni, Missina, 1901.

10. B. B. Cunningham and C. W. Koch, unpublished.

11. P. L. Kirk, R. E. Craig, J. E. Gullberg and R. Q. Boyer, Anal. Chem. 19, 427 (1947).

12. Manufactured by T. H. Garner, Vortox Company, Claremont, California.

13. L. B. Magnusson and T. J. LaChapelle, J. Am. Chem. Soc. 70, 3534 (1948).

14. B. B. Cunningham, AECD-1879 (Dec. 1947).

15. L. B. Werner and I. Perlman, Plutonium Project Record, Vol. 14B, Paper 22.5

16. R. C. Sisco, B. B. Cunningham and P. L. Kirk, J. Biol. Chem. 139, 1 (1941).

17. D. C. Stewart and B. B. Cunningham, unpublished.

18. Amos S. Newton, MDDC 724 (Mar. 1948).

19. E. F. Westrum, Jr., unpublished.

20. D. M. Gruen and J. J. Katz, AECD 1892 (Mar. 1948).

21. Sherman Fried and Norman Davidson, J. Am. Chem. Soc. 70, 3539 (1948).

22. L. Eyring, Ph.D. Thesis, University of California, 1949, UCRL-327 (Revised) (April 19, 1949).

23. L. B. Asprey and B. B. Cunningham, unpublished.

24. L. B. Asprey, Ph. D. Thesis, University of California, 1949.

25. Randall, Nielson and West, Ind. Eng. Chem. 23, 388 (1931).

26. A. Broido and B. B. Cunningham, unpublished.

27. B. M. Abraham, N. R. Davidson and E. F. Westrum, Jr., Plutonium Project Record, Vol. 14B, Paper 6.60.

28. E. F. Westrum, Jr., Plutonium Project Record, Vol. 14B, Paper 6.5.

29. H. L. Baumbach, unpublished.

30. H. L. Baumbach and P. L. Kirk, unpublished.

31. L. Eyring, unpublished.

32. P. L. Kirk, R. S. Rosenfels and D. J. Hanahan, Anal. Chem. 19, 355 (1947).

33. Simon Fried and Fred J. Leitz, Jr., J. Chem. Phys. 17, 540 (1949).

34. Betsy Jones and J. G. Conway, unpublished.

35. J. J. Howland and Melvin Calvin, AECD 1895 (Mar. 1948).

36. B. B. Cunningham and J. C. Wallmann, unpublished.

37. W. Swietoslowski, "Microcalorimetry", Reinhold Publishing Corp, N. Y. (1946).

38. E. F. Westrum, Jr., AECD 1903

39. E. F. Westrum, Jr., and J. C. Wallmann, unpublished.

40. T. E. Phipps, O. C. Simpson and R. L. Seifert, Plutonium Project Record, Vol. 14B, Paper 6.1a.

41. E. F. Westrum, Jr., and LeRoy Eyring, unpublished.

42. P. L. Kirk, unpublished.

43. S. Katz, unpublished.

44. For example, H. H. Hopkins, Jr., and B. B. Cunningham, Phys. Rev. 73, 1406 (1948).

45. S. G. Thompson, A. Ghiorso and B. B. Cunningham, unpublished.

46. Malcolm Webb, unpublished.