UCRL 442

Copy 8 2

DECLASSIFIED

UNIVERSITY OF CALIFORNIA

Radiation Laboratory

TWO-WEEK LOAN COPY

This is a Library Circulating Copy which may be borrowed for two weeks. For a personal retention copy, call Tech. Info. Division, Ext. 5545

BERKELEY, CALIFORNIA

UCRL-442 c.2

DISCLAIMER

This document was prepared as an account of work sponsored by the United States Government. While this document is believed to contain correct information, neither the United States Government nor any agency thereof, nor the Regents of the University of California, nor any of their employees, makes any warranty, express or implied, or assumes any legal responsibility for the accuracy, completeness, or usefulness of any information, apparatus, product, or process disclosed, or represents that its use would not infringe privately owned rights. Reference herein to any specific commercial product, process, or service by its trade name, trademark, manufacturer, or otherwise, does not necessarily constitute or imply its endorsement, recommendation, or favoring by the United States Government or any agency thereof, or the Regents of the University of California. The views and opinions of authors expressed herein do not necessarily state or reflect those of the United States Government or any agency thereof or the Regents of the University of California.

UNIVERSITY OF CALIFORNIA
Radiation Laboratory

Cover Sheet
Do not remove

INDEX NO. UCRL 442
This document contains 12 pages
This is copy 83 of 92 Series A

Issued to Info. Division

DECLASSIFIED

~~CONFIDENTIAL~~

Classification

Each person who receives this document must sign the cover sheet in the space below

Route to	Noted by	Date	Route to	Noted by	Date
Kaplan	✓				
//					

DECLASSIFIED

CONFIDENTIAL

UCRL 442
Physics-General Distribution

UNIVERSITY OF CALIFORNIA

Radiation Laboratory

Contract No. W-7405-eng-48

CLASSIFICATION CANCELLED
BY AUTHORITY OF THE DECLASSIFICATION BRANCH USAEC per TID 1116
BY B Faskett, 5-15-56
SIGNATURE OF THE PERSON MAKING THE CHANGE DATE

SUMMARY OF THE RESEARCH PROGRESS MEETING OF AUGUST 11, 1949

H. P. Kramer

September 19, 1949

CAUTION

This document contains information affecting the National Defense of the United States.
Its transmission or the disclosure of its contents in any manner to an unauthorized person is prohibited and may result in severe criminal penalties under applicable Federal laws.

Berkeley, California

DECLASSIFIED

~~CONFIDENTIAL~~

Standard Distribution	Copy Numbers
Argonne National Laboratory	1-12
Armed Forces Special Weapons Project	13
Atomic Energy Commission, Washington	14-15
Battelle Memorial Institute	16
Brookhaven National Laboratory	17-20
Bureau of Ships	21
Carbide and Carbon Chemicals Corporation (K-25 Plant)	22-25
Carbide and Carbon Chemicals Corporation (Y-12 Plant)	26-29
Columbia University (Dunning)	30
General Electric Company, Richland	31-34
Hanford Operations Office	35
Iowa State College	36
Knolls Atomic Power Laboratory	37-40
Los Alamos	41-43
Mound Laboratory	44-46
National Advisory Committee for Aeronautics	47
National Bureau of Standards	48-49
Naval Radiological Defense Laboratory	50
NEPA Project	51
New Brunswick Laboratory	52
New York Operations Office	53-54
North American Aviation, Inc.	55
Oak Ridge National Laboratory	56-63
Patent Branch, Washington	64
Sandia Laboratory	65
Technical Information Branch, ORE	66-80
UCLA Medical Research Laboratory (Warren)	81
University of California Radiation Laboratory	82-86
University of Rochester	87-88
Westinghouse Electric Corporation	89-92
	92

INFORMATION DIVISION
Radiation Laboratory
Univ. of California
Berkeley, California

DECLASSIFIED
~~CONFIDENTIAL~~

SUMMARY OF THE RESEARCH PROGRESS MEETING
OF AUGUST 11, 1949

H. P. Kramer

September 19, 1949

Focus of the 184-Inch Cyclotron. W. Panofsky.

Since the proton conversion of the 184-inch cyclotron, experiments have suffered from the fact that the deflected proton beam was too large in cross section for most experiments and had to be reduced by collimators which decreased the available intensity. In order to provide a well collimated beam without loss in intensity the speaker and W. Baker have considered a number of focusing devices and have adopted one of these for use.

The first proposal that was considered provided for focusing by a wedge shaped magnetic field. This was rejected because it would involve relocating the shielded cave into which the beam is deflected from the cyclotron tank.

Focusing with a solenoid is out of the question because the focusing properties are second order effects since the force which focuses the particles is proportional to the angle of deviation of the beam from the axis of the solenoid.

Next, the advantages and disadvantages of an alternating sequence of open and foil covered tubes connected to bus bars at positive and negative potentials were weighed. The apparatus with lines of force is sketched in Fig. 1. If F is the focal length, g the indicated gap between drift-tubes, n the number of drift tubes, V the potential, and $\beta = v/c$, then

$$F = \frac{2g}{n} \cdot \frac{\beta^2}{\sqrt{1 - \beta^2}} \cdot \frac{1}{V}$$

For g = 2 in., n = 20 and F = 200 in. a voltage of V = 700 kv is needed.

Another proposal which was considered, contemplated the use of a series of concentric pipes with the voltage increasing from the inner to the outer

pipes as the square of the radius. This device is sketched in Fig. 2. If L is the length of the tubes and a is the maximum radius, the focal length F is

$$F = \frac{a^2}{2L} \cdot \frac{1}{V} \cdot \frac{\beta^2}{\left(\sqrt{1 - \beta^2}\right)^{1/2}}$$

and for F = 200 in., a = 2 in., L = 40 in. a voltage of V = 190 kv is required.

The proposal that was finally adopted takes advantage of the focusing properties of a sheath of positive current surrounding the proton beam. The magnetic field that is induced by the tube of current increases linearly from the center to the locus of the current and then drops off again towards the return conductor. The focal length of such a device is given by

$$F = \frac{a}{L} \frac{(H\rho)}{H_o}$$

The practical problem which had to be solved was that of finding a proton transparent conductor with uniform current density. After rejecting a pair of coaxial tubes shorted at one end by a thin foil, an apparatus making use of gas discharge through 0.5mm H_2 was adopted on the suggestion of W. Baker. The lens and circuit are shown in Fig. 3. A glass pipe is used to contain the gas within the inside diameter. The discharge is induced by a capacitor which is periodically discharged through a spark gap at intervals to coincide with the pulsing of the beam. The current which flows through the circuit is plotted in Fig. 4 as a function of time. The peak is synchronized with the arrival of a deflected proton bundle.

By adjusting pressure, voltage, and the other variables involved it has been possible to obtain a uniform discharge of 600 amp. at 15 kv. In testing the actual focusing properties it was found that the full, calculated focal length could not be achieved. Nonetheless, the minimum diameter of

the beam has been reduced from about 2 in. to .55 in. at 1/2 calculated focal length and the beam density has correspondingly been increased in the ratio 16:1.

An indication of the effectiveness of the focusing systen is given by the composite sketch from photographs, before and after, of the beam that is shown in Fig. 5.

Proposed Experiment on the Scattering of Neutrons by Deuterons in the Cloud Chamber. G. Chew.

Since nuclei are composed of protons and neutrons, it is important for the prediction of nuclear properties to know the forces that exist between nucleons in the three possible different combinations of the two elementary particles. The proton-proton and the neutron-proton cross sections have been measured by the bombardment of hydrogenous material since the resultant particle is charged and can therefore be easily detected. However, since neutrons carry no charge and therefore do not directly produce ionization, the cross section for neutron-neutron scattering cannot as easily be measured and has heretofore not been determined.

The material which most closely approaches the ideal target for the measurement of the neutron-neutron cross section is deuterium since its nucleus contains, in addition to the neutron, only one proton which might bring about interfering processes. Therefore, the experiment contemplates the bombardment of deuterium gas and deuterium oxide in a cloud chamber by the neutron beam which emanates from a beryllium target in the 184-inch cyclotron.

When neutrons strike deuterium nuclei, neutrons, protons, and deuterons are emitted. Neutrons, of course, are not detected in a cloud chamber. However, when a neutron is knocked out, the proton which remains behind moves with the momentum which characterizes its bound state within the deuterium

nucleus. The tracks of protons of such energies can be identified and distinguished from proton tracks which result from the direct knocking out of a proton. The means of identification of protons as to energy consists of noting the $H\rho$ of the track and the change in curvature which the track experiences as it passes through a foil of known thickness that is placed inside the cloud chamber.

Two processes are available for the production of deuteron tracks. The most important of these processes consists of the "picking up" by the impinging neutron of the proton in the deuterium nucleus and the subsequent combination of these two particles into an accelerated deuteron. This process was observed to occur at a relatively high frequency by H. York and has been discussed by him in "Protons and Deuterons Knocked out of Nuclei by 90 Mev Neutrons" May 31, 1949, UCRL 359. Another process by which deuteron tracks may be produced in the cloud-chamber is the scattering by the impinging neutrons of deuterons as complete entities. The probability that a deuteron is preserved when it is struck full force by a neutron is very slight. However, at glancing angles the probability becomes more appreciable.

When a neutron strikes a proton within the deuterium nucleus, it may scatter the proton in somewhat the same fashion as if it were free. However, in calculating the probability of this process one must take into account the effect of intranuclear binding forces and of the exclusion principle which prohibits the replacement of a proton by a neutron in the deuterium nucleus if such a replacement results in the occupation of a state that is already occupied by the neutron in the nucleus. These effects tend to reduce the cross section below that for free neutron-proton scattering. When a neutron strikes a neutron within the deuterium nucleus, there is a finite probability that both the impinging neutron and the accelerated neutron will scatter in

such a way that the proton is left with the momentum which it possesses by virtue of being a component of the deuterium nucleus. The angular distribution of these protons is almost completely isotropic.

The proposed experimental arrangement is sketched in Fig. 6. A cloud chamber is placed in a magnetic field. Within the cloud chamber a foil, placed in the forward direction and extending through a sector from -30° to $+30^{\circ}$, makes it possible by means of the observed change in the radius of curvature through the foil, the known attenuation for deuterons and protons, and $H\rho$ to identify particles completely with regard to type and energy.

The expected angular distribution of deuterons is shown in Fig. 7 and that of knock-out protons in Fig. 8. The energy distribution for the protons which are left behind when a neutron is knocked out of the nucleus is sketched in Fig. 9.

Coincidence Counting. G. Goeckermann.

The recent interest in α-emission systematics and total transition energies has accentuated the importance of coincidence counting. It is believed that all α-particles are accompanied by direct or converted soft electromagnetic radiation. In order to detect and count this radiation in conjunction with α-particles a new coincidence counting system has been designed. The arrangement makes use of end window Geiger counters.

The circuit has a minimum resolving time of 1 microsecond. The gates are open for 2 milliseconds and are delayed for 7 milliseconds. Originally the twenty percent geometry shown in Fig. 10 was used. This has now been modified to the geometry shown in Fig. 11 which is capable of counting fifty percent of all α-emissions and twenty-five percent of the coincident x-rays. The tubes are filled with Xe under 10 cm pressure and alcohol under 1 cm pressure. The soft counting efficiencies were determined by means of well known decays and

are set down in the following table.

Counting Efficiencies for Soft Photons (15-16 Kev)

Counter voltage (kv)	Efficiency (percent)
15	4
30	2
100	0.1 (does not allow the observation of the K x-rays of the heavy elements)
300-400	0.1
1,100	4

Some work has been done to resolve the decay scheme of U^{231}. In Np^{239} a cascade of soft partially converted γ-rays has been observed. For Am^{241} a 60 kev γ-ray has been measured. It appears that the γ rays are converted in the L shell. However, the conversion electrons from this process are too soft to be counted with the present end window. Indications are that one 60 kev photon accompanies every α-emission. Several weak γ rays have been observed with Pu^{239}, however, no α coincidences were found. It has been possible to detect a conversion electron in conjunction with the 30 kev γ-ray which accompanies α-emission in U^{233}. The abundance of this electron is 0.2 percent. L x-ray, α-emission coincidences have been observed with a twelve percent abundance.

Information Division
scb/9-19-49

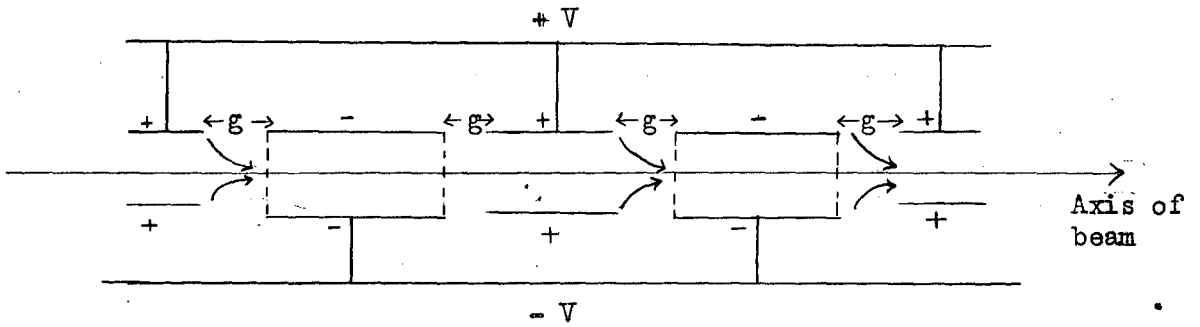

Figure 1

Proposed Electrostatic Focusing Lens

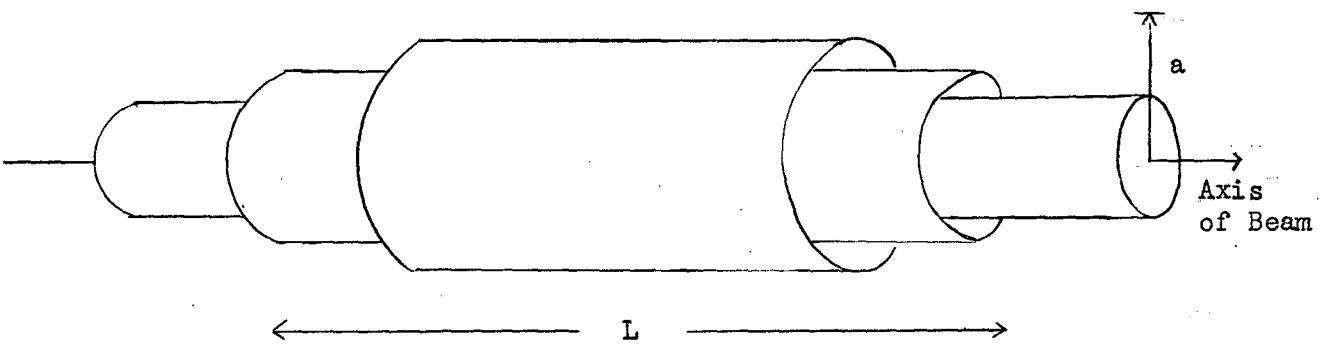

Figure 2

Proposed Electrostatic Focusing Lens

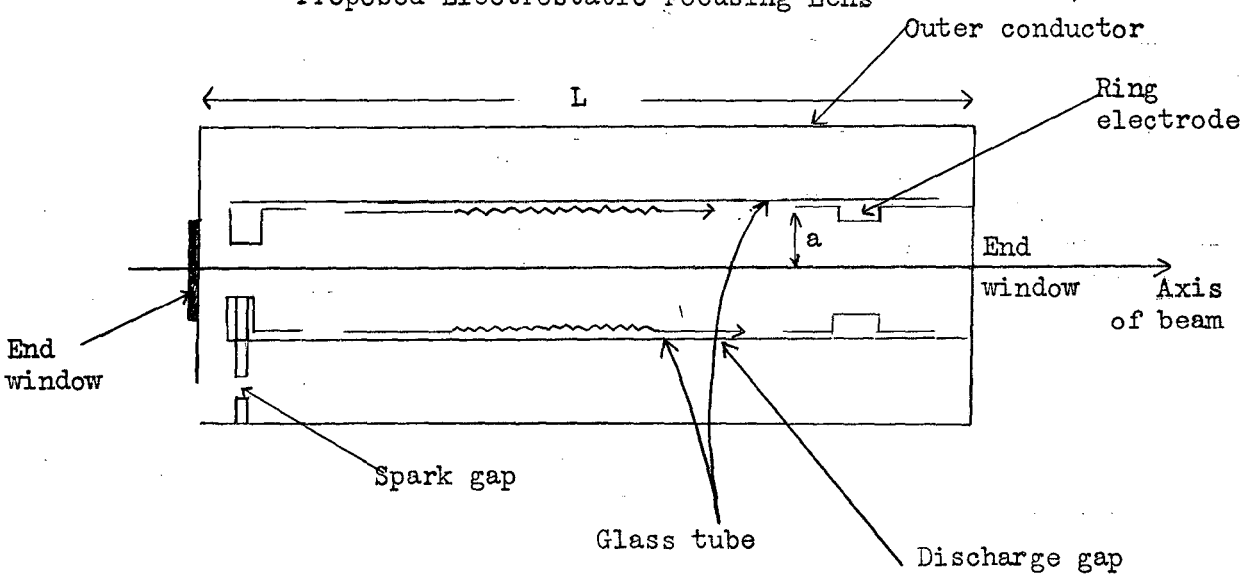

Figure 3

The Adopted Focusing Device

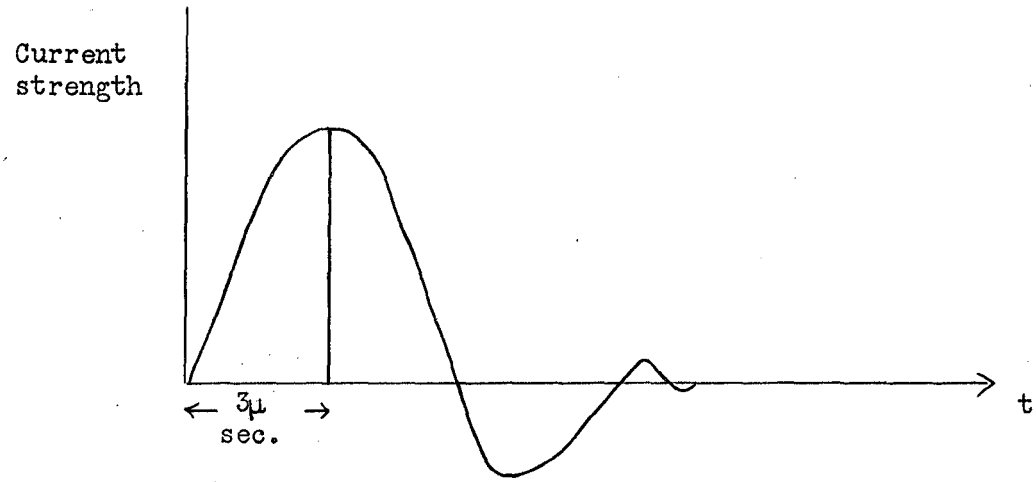

Figure 4

Variation in Current Intensity in the Circuit of Figure 3.

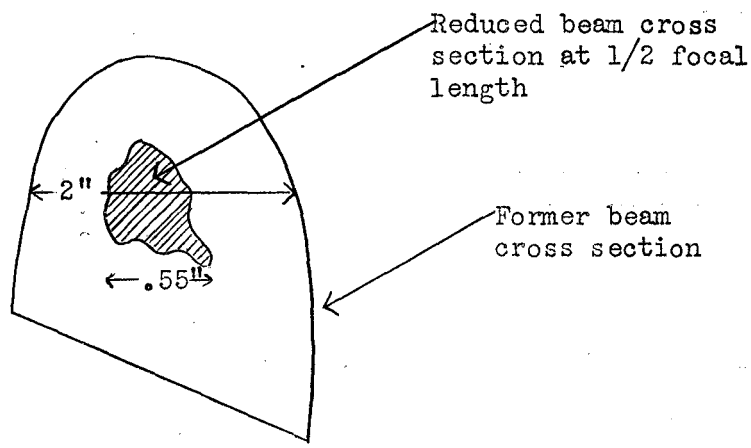

Figure 5

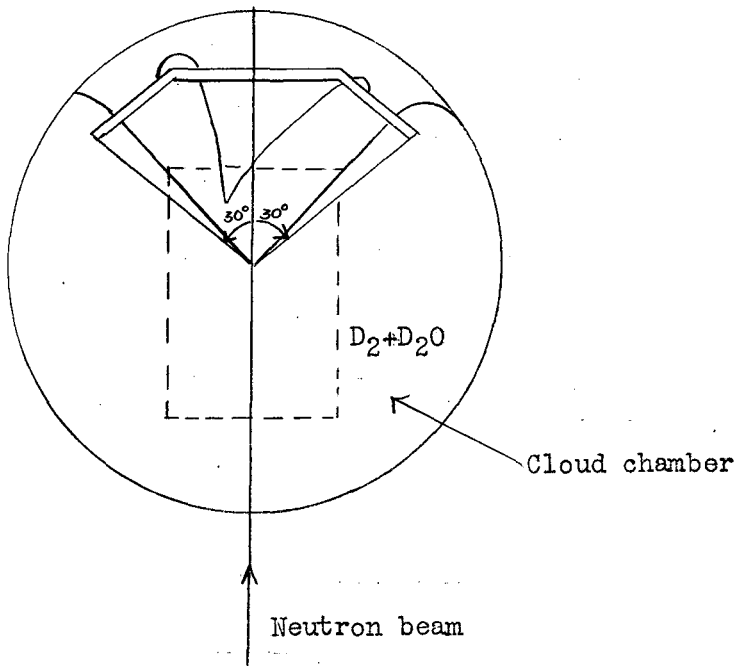

Figure 6

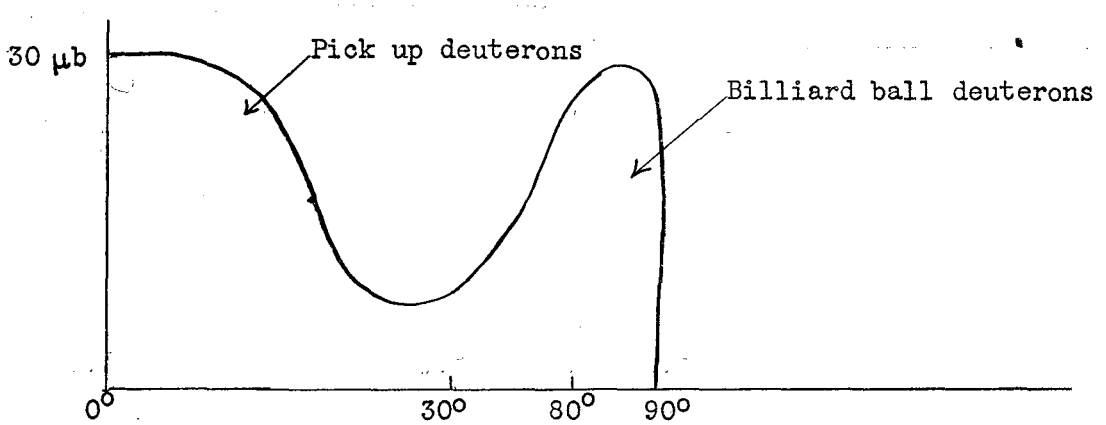

Figure 7

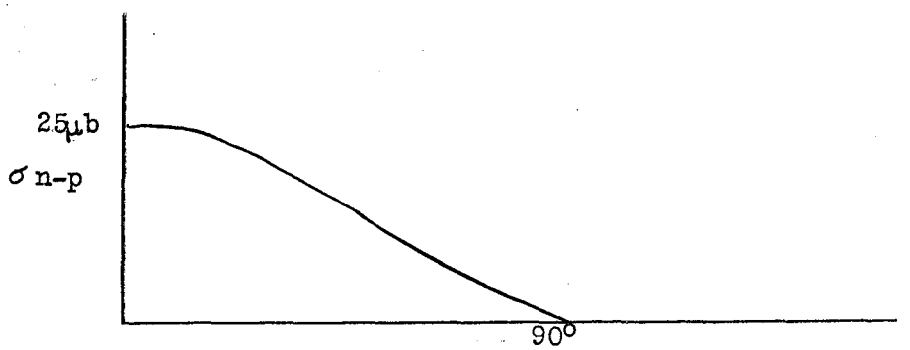

Figure 8

Cross Section for Knock-On Protons

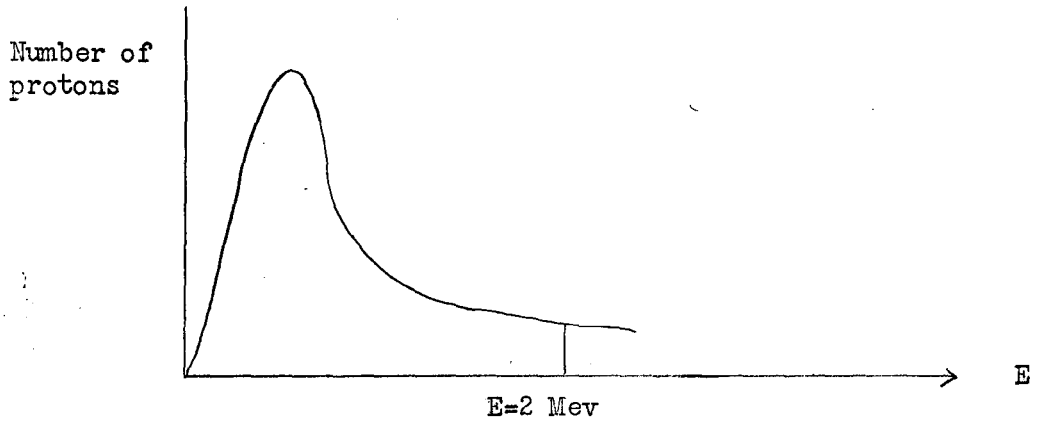

Figure 9

Energy Distribution of Protons That Are Left Behind When Neutron is Knocked-out of Deuterium Nucleus

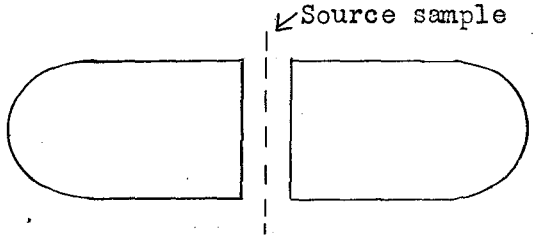

Figure 10

Twenty Percent Coincidence Geometry

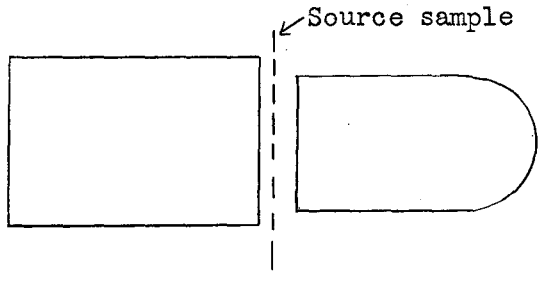

Figure 11

Fifty Percent Coincidence Geometry

CONFIDENTIAL
DECLASSIFIED

CONFIDENTIAL