UCRL 447
Copy 2

UNIVERSITY OF CALIFORNIA

Radiation Laboratory

TWO-WEEK LOAN COPY

This is a Library Circulating Copy which may be borrowed for two weeks. For a personal retention copy, call Tech. Info. Division, Ext. 5545

BERKELEY, CALIFORNIA

DISCLAIMER

This document was prepared as an account of work sponsored by the United States Government. While this document is believed to contain correct information, neither the United States Government nor any agency thereof, nor the Regents of the University of California, nor any of their employees, makes any warranty, express or implied, or assumes any legal responsibility for the accuracy, completeness, or usefulness of any information, apparatus, product, or process disclosed, or represents that its use would not infringe privately owned rights. Reference herein to any specific commercial product, process, or service by its trade name, trademark, manufacturer, or otherwise, does not necessarily constitute or imply its endorsement, recommendation, or favoring by the United States Government or any agency thereof, or the Regents of the University of California. The views and opinions of authors expressed herein do not necessarily state or reflect those of the United States Government or any agency thereof or the Regents of the University of California.

Copy 2
UCRL 447

Unclassified Distribution

UNIVERSITY OF CALIFORNIA

Radiation Laboratory

Contract No. W-7405-eng-48

UNCLASSIFIED

PHYSICS DIVISION QUARTERLY REPORT

May, June and July 1949

September 15, 1949

Berkeley, California

INSTALLATION	No. of Copies
Argonne National Laboratory	8
Armed Forces Special Weapons Project	1
Atomic Energy Commission, Washington	2
Battelle Memorial Institute	1
Brookhaven National Laboratory	8
Bureau of Medicine and Surgery	1
Bureau of Ships	1
Carbide & Carbon Chemicals Corp. (K-25)	4
Carbide & Carbon Chemicals Corp. (Y-12)	4
Chicago Operations Office	1
Cleveland Area Office	1
Columbia University (Dunning)	1
Columbia University (Failla)	1
Dow Chemical Company	1
General Electric Company, Richland	6
Hanford Operations Office	1
Idaho Operations Office	1
Iowa State College	2
Kansas City	1
Kellex Corporation	2
Knolls Atomic Power Laboratory	4
Los Alamos	3
Mallinckrodt Chemical Works	1
Massachusetts Institute of Technology (Gaudin)	1
Massachusetts Institute of Technology (Kaufmann)	1
Mound Laboratory	3
National Advisory Committee for Aeronautics	2
National Bureau of Standards	2
Naval Radiological Defense Laboratory	2
NEPA Project	2
New Brunswick Laboratory	1
New York Operations Office	5
North American Aviation, Inc.	1
Oak Ridge National Laboratory	8
Patent Advisor, Washington	1
Rand Corporation	1
Sandia Base	1
Sylvania Electric Products, Inc.	1
Technical Information Branch, ORE	15
U. S. Public Health Service	1
UCLA Medical Research Laboratory (Warren)	1
University of California Radiation Laboratory	5
University of Rochester	2
University of Washington	1
Western Reserve University (Friedell)	2
Westinghouse Electric Corp.	4

INFORMATION DIVISION
Radiation Laboratory
Univ. of California
Berkeley, California

TABLE OF CONTENTS

I GENERAL PHYSICS RESEARCH — Page

Cloud Chamber Program 4
Film Program 9
Measurement of Total Cross Sections of Nuclei for 40 Mev Neutrons 13
Mass Spectrograph 14
Application of Scintillation Counters to Detection of High Energy Particles in the 184-inch Cyclotron 15
Studies of Shielding and Radiation Fields of Acceleration 17
Proton-proton Scattering -32 Mev 18
Inelastic Scattering 19
Final Results of the Measurements on the Half Life of the Positive π Meson 20
Short-lived Radioactivities 21
Neutron Half Life 22
Electric Detection of Mesons 23
Absorption of Negative π Mesons in Hydrogenous Materials 24
Linear Accelerator Design 25
Electron Multiplier 26
Proton-proton Scattering -340 Mev 27
Neutron-proton Scattering -270 Mev 29
Fission Excitation Functions Using Charged Particles 31
Production of Li^8 by Charged Particle Bombardment 32

II ACCELERATOR OPERATION AND DEVELOPMENT

184-inch Cyclotron 33
60-inch Cyclotron 34
Synchrotron 36
Linear Accelerator and Van de Graaff 38
Bevatron Development 39

I GENERAL PHYSICS RESEARCH

1. Cloud Chamber Program

Evans Hayward

The X-ray Spectrum of the Berkeley Synchrotron

Preliminary results have been obtained from an experiment designed to measure the x-ray spectrum of the Berkeley synchrotron.

Apparatus. A 16-inch diameter Wilson cloud chamber in a magnetic field of 10,000 gauss was placed in the x-ray beam from the synchrotron. The center of the cloud chamber was located 88.5 feet from the 20 mil thick platinum target of the synchrotron. A six inch thick lead collimater, 35 feet from the target, collimated the x-rays so that they formed a beam at the chamber 6.5 inches wide and 1 inch high. A thin vertical lead plate one mil thick across the center of the cloud chamber intercepted the beam of x-rays. Electron-positron pairs were produced in the lead plate and the gas (a mixture of half argon and half helium with water and ethyl alcohol for the vapor) of the chamber. Only those pairs produced in the lead plate were used in the data given below.

Improvements in Technique. Several improvements in technique helped produce good pictures. The temperature control of the cloud chamber was changed so as to control the temperature of the air around the chamber to a tenth of a degree centigrade instead of controlling the cooling water temperature. This reduced turbulence so that the straight tracks had an average radius of curvature of 100 meters. The timing was improved so as to reduce jitter to the order of .005 seconds. A timer measured the interval between the opening of the pop valve on the chamber and a signal coming directly from a loop of wire around the synchrotron magnet. This time interval was observed frequently and the pop valve oiled and adjusted whenever the timing showed variations. The lights were put on sufficiently early so as to require the camera lenses to be set at f.8 instead of f.16. The interval of time between the arrival of the beam and the flashing of the lights lay between 0.035 and 0.045 seconds.

The gas mixture used was suggested by T. C. Merkle, Jr., for the following reasons: Argon gas has the advantage of producing more ionization than helium, and for electron tracks this makes energy measurements more accurate and easier. The disadvantage of argon arises from its low heat conductivity of 3.89×10^{-5} calorie cm./deg C-sec. In a chamber of these dimensions, 16 inches in diameter and 6 inches deep, the low heat conductivity increases the waiting time required for thermal equilibrium to 5 minutes. By adding helium which has a heat conductivity of 33.9×10^{-5} calorie cm./deg C-sec. this time is reduced to 45 seconds while the remaining half atmosphere of argon gives heavier ionization than pure helium.

Results. The energy of the x-ray photon making a pair is equal to the sum of the total energies of the positron and electron in the pair. The accuracy obtainable in the experiment is limited by the total number of pairs it is practical to measure. The intention is to measure 2400 pairs. The number in any energy group

will be of the order of 100 or less and therefore the statistical error will be about 10 percent. With one mil of lead only 0.2 percent of the electrons or positrons will radiate more than 1/2.7 of their energy. This means that the correction for radiation in the lead plate is neglibible compared to the statistical errors expected. Another error arises from the stopping of low energy electrons or positrons in the lead plate and the consequent appearance of only one particle of a pair. Compton electrons appear as single particles. If there is an appreciable fraction of Compton recoils, then the number of single electrons should exceed the number of single positrons. This excess was not found to exceed a reasonable discrepancy and, therefore, single particles are lumped with pairs in obtaining the energy distribution.

If the pulse from the synchrotron was too large then it was difficult to identify the pairs but not impossible. In one case only two pairs started at so nearly the same point that it was impossible to determine which positron belonged to a particular electron. The background of tracks traversing the lead foil was quite small and it was made even smaller by using a 5 mil aluminum window covering a rectangular hole in the quarter inch glass wall of the chamber. This hole was 2 inches high and 9 inches wide so that it was well out of the beam of x-rays. Particles making circles of such a size that several traversals of the lead foil were made by the same particle gave the most trouble because of the difficulty of determining the starting point. Figure 1 shows an example of this in the pair on the right hand side of the picture. Electrons curve to the left. In this pair the electron traverses the lead plate twice after starting in it. The start of the pair is slightly to the left of the two traversals. In spite of this, the interpretation was ambiguous in less than one percent of the pairs. This difficulty increased the time necessary to make an accurate measurement.

Table I gives the number of pairs and singles in 10 Mev intervals down to 10 Mev. The experiment is inaccurate at energies much below 20 Mev both because the particles of a pair make such small circles in the 10,000 gauss field and because the angular distribution of these low energy pairs around the direction of the photon broadens in a manner for which it is difficult to correct. Above 15 Mev the geometric corrections are negligible and the only correction necessary for calculating the number of photons per Mev at a given energy is the cross section in lead for pair production. Table I, Column II, gives these cross sections relative to the cross section at 190 Mev as taken from "The Quantum Theory of Radiation" by W. Heitler, Fig. 18, p. 201. Corrections calculated here by J. Steinberger and R. Christian for the 20 mil thickness of the platinum target result in a very slight change only in the expected energy distribution of the photons from that expected from a thin target. Assuming an energy of 330 Mev for the incident electrons, Steinberger obtains the distribution given in Column 3 of Table II. This is found to agree within experimental error with Column 1 of Table II which gives the energy distribution obtained experimentally from 903 pairs and singles after normalization at 200 Mev and correction by dividing by the pair production cross sections given in Column 2 of Table I. See Fig. 2.

The error in determining the energy of a pair arises from the method of measuring curvature. This measurement is made by matching templates with a life size reprojection of the tracks. The accuracy is limited by the templates to

about 2.5 percent. All tracks are measured twice by independent observers and the errors found occur in about 10 percent of the tracks. These errors are rechecked by both observers and thus far there have not been more than five occasions when interpretation was ambiguous.

Mesons.

Cloud chamber observation of mesons produced by neutrons has previously been reported. This work has been continued and to date no means has been found for observing mesons in appreciable numbers. Two rather remarkable events were, however, observed. The first (Fig. 3) is a slow meson that entered the illuminated region and was bent by the magnetic field through more than 360° before it stopped and produced a one-prong star. The range and curvature of the particle indicate that it is a π meson of negative charge. The second interesting event is shown in Fig. 4. There is a star having three heavy fragments and one light one. The light particle is curved in the opposite sense from the other particles and, hence, must be negative. It can be either a 60 Mev π meson or a 145 Mev electron. The gas is argon.

TABLE I

	I	II	III	IV
Voltage Interval Energy in Mev	No. of Pairs and Singles	Pair Production Cross Section Relative to That at 190 Mev	Column I Divided by Column II	Column III Multiplied by the Mean Energy in Mev
300-	9	1.045	8.6	.027
290-299	12	1.04	11.5	.034
280-289	12	1.04	11.5	.033
270-279	15	1.03	14.6	.040
260-269	12	1.03	11.7	.032
250-259	16	1.03	15.5	.0395
240-249	10	1.02	9.8	.024
230-239	12	1.02	11.8	.028
220-229	15	1.01	14.8	.033
210-219	11	1.01	10.9	.0235
200-209	19	1.01	18.8	.0385
190-199	16	1.00	16	.031
180-189	16	1.00	16	.0295
170-179	22	.99	22.2	.039
160-169	16	.98	16.4	.027
150-159	21	.97	21.6	.0335
140-149	20	.96	20.8	.030
130-139	21	.96	21.9	.032
120-129	24	.95	25.3	.032
110-119	18	.93	19.3	.022
100-109	37	.92	40.2	.042
90-99	39	.90	43.3	.041
80-89	23	.89	25.8	.022
70-79	37	.87	42.5	.032
60-69	59	.84	70.3	.046
50-59	62	.81	76.6	.042
40-49	62	.77	80.5	.036
30-39	78	.71	110	.0385
20-29	99	.63	157	.039
10-19	100	.49	204	.0306

TABLE II

Energy Interval (Mev)	I Experimental Intensity Distribution of the X-Rays in Arbitrary Units	II Mean Error	III Calculated Intensity Distribution of the X-Rays Normalized at 200 Mev
>300	30.5	±10.2	60
280-299	76	18.1	68
260-279	81.5	18.1	68
240-259	71	13.5	68
220-239	69	13.5	68
200-219	70	12.4	68
180-199	68	12.4	69
160-179	75	12.4	70
140-159	72	11.3	73
120-139	72	11.4	76
100-119	72	10.2	79
80-99	71	9	83
60-79	88	9	88
40-59	88	8	92
20-39	87	5.7	98

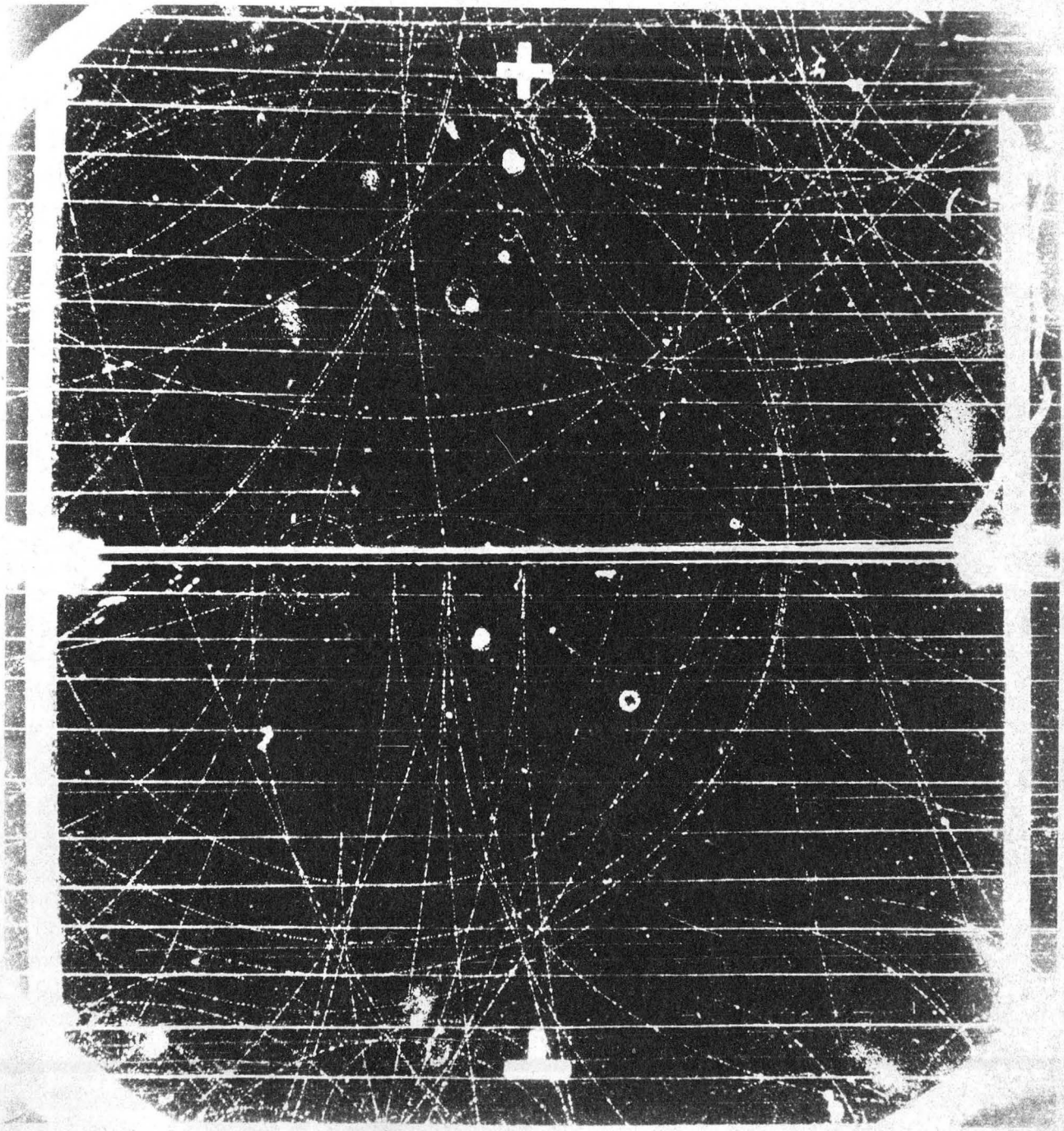

FIG. 1

OZ 638

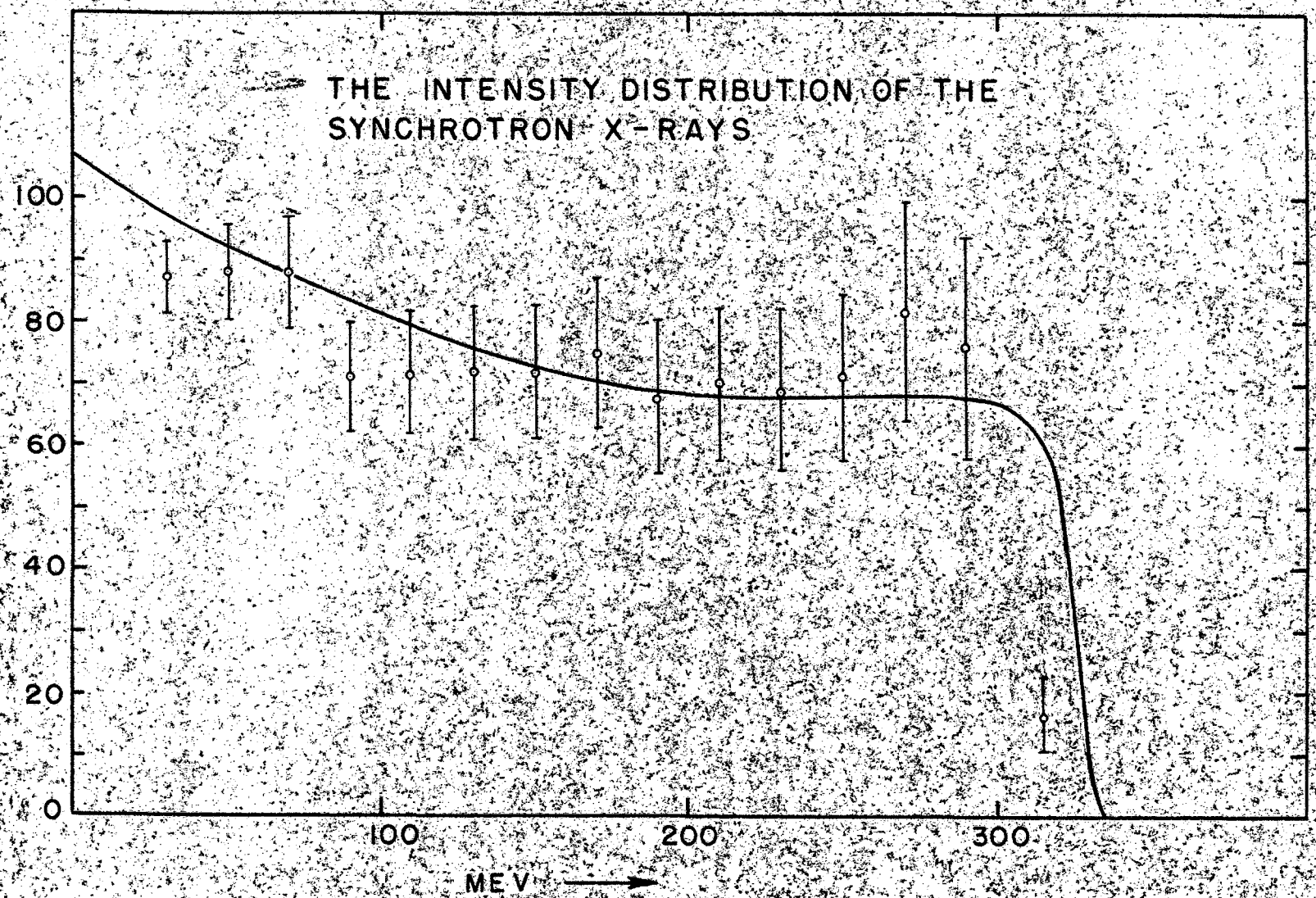
THE INTENSITY DISTRIBUTION OF THE
SYNCHROTRON X-RAYS
100
80
60
40
20
0
100
200
300
MEV

FIG. 2

13968-1

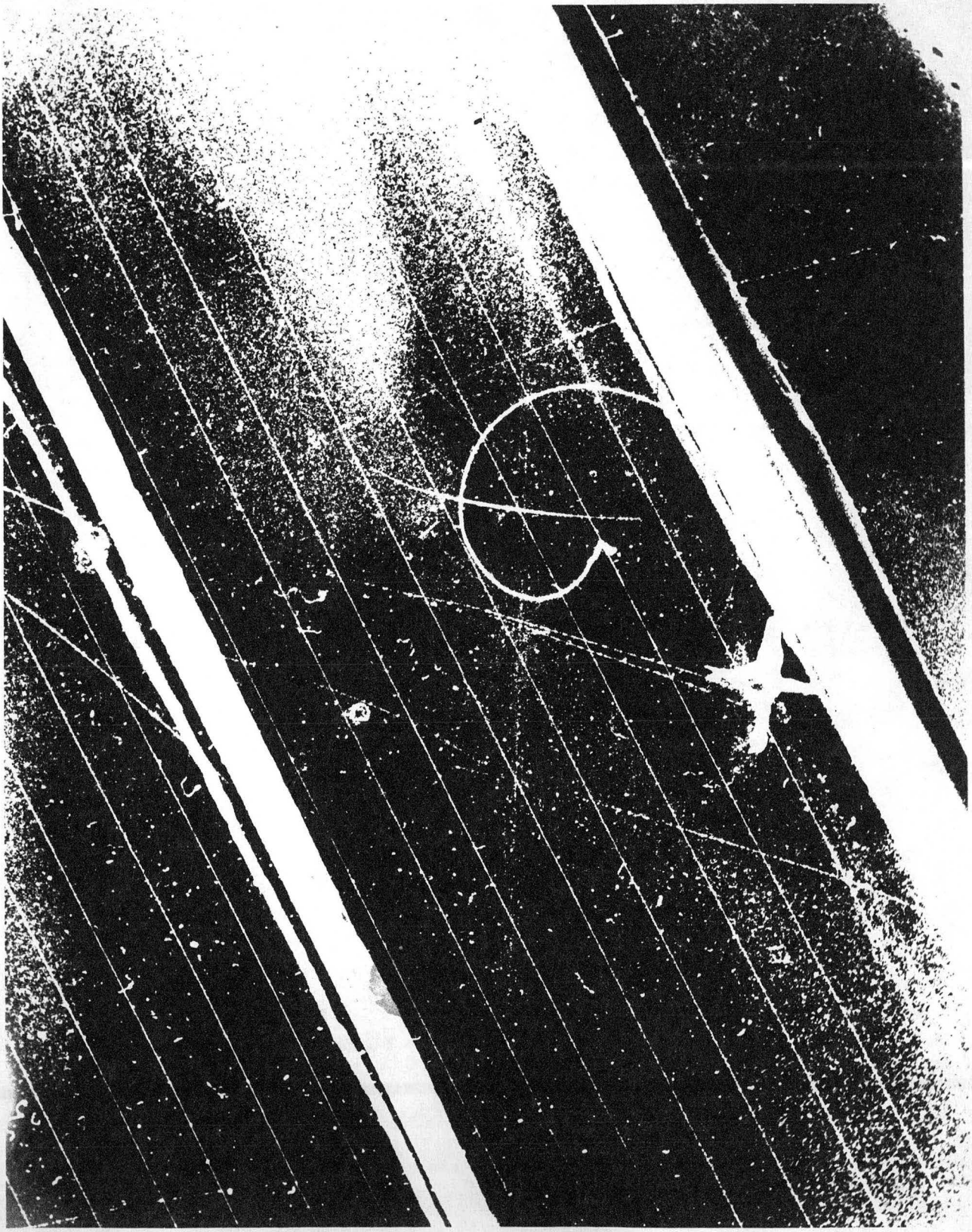

FIG. 3

OZ 637

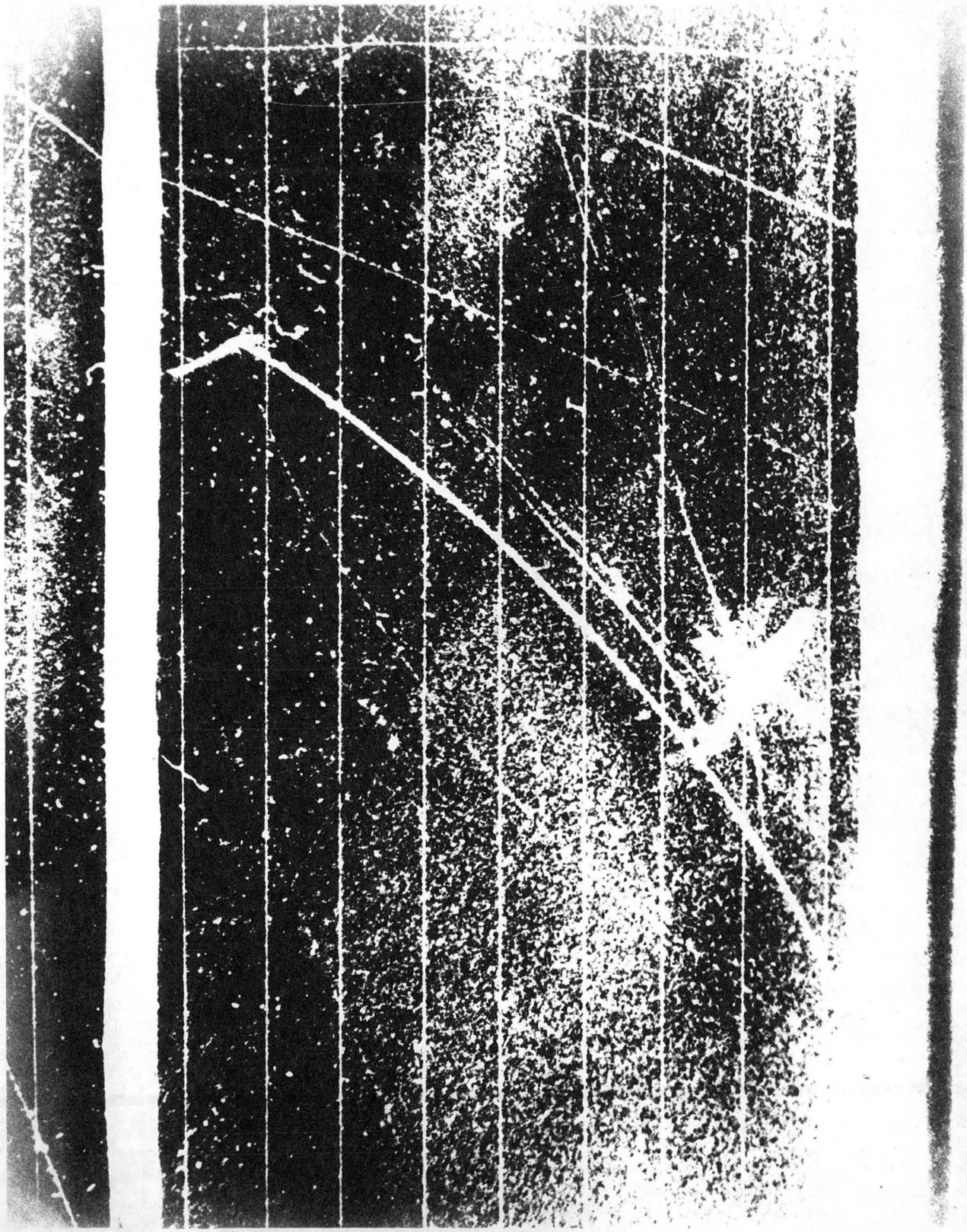

FIG. 4

2. Film Program

Hugh Bradner, Eugene Gardner, F. M. Smith, W. H. Barkas and A. S. Bishop

Mesons Produced by Neutrons from the Cyclotron.

In photographic plates exposed to high energy neutrons from the 184-inch Berkeley cyclotron, we have observed stars in which one of the outgoing particles is a meson. This type of star is well known from cosmic ray studies[1], and the only new feature is that the stars we are studying were initiated by particles from the cyclotron. The arrangement of apparatus is shown in Fig. 1. As indicated in the figure, the neutrons used for bombarding the plates are produced in the cyclotron when a beam of 350 Mev protons strikes an internal target. The plates are placed in a position similar to that used in cloud chamber studies[2] of mesons produced by neutrons from the cyclotron.

An example of a photographic emulsion star in which one of the outgoing particles is a meson is shown in Fig. 2. The star, on the left of the figure, consists of two tracks, a proton (upper track) and a π-meson (lower track). From the grain density changes along the tracks it is clear that both proton and meson were moving from left to right. The meson came to rest in the emulsion and initiated a one-prong star; the one prong is the straight heavy track which begins where the meson track ends. A total of five events of this type were found in an area of 8 sq. cm. of an Ilford C.2 plate. The emulsion was unbacked, and had a thickness of 300 microns before development. The exposure time was about 5 minutes. In addition to the five meson tracks associated with stars, there were four meson tracks which could not be followed back to the points at which the mesons were formed.

It is almost certain that tracks of all mesons formed were not observed. With the emulsion used in this study tracks of mesons of energy greater than about 10 Mev could not be followed. Even in the energy region where the tracks could be followed one probably would not recognize a track as that of a meson unless the meson had stopped in the emulsion. Furthermore, meson tracks would be missed which went up or down through the emulsion at a steep angle.

Range Energy Relation for Protons in Nuclear Emulsions.

An experimental range-energy relation in Ilford C.2 emulsion has been obtained for protons up to 39.3 Mev. In the region from 17 to 33 Mev the relation for dry emulsion is fitted by the empirical equation $E_{(Mev)} = 0.250\ R_{(\mu)}^{0.581}$. Variations in water content due to changes in atmospheric humidity make several percent difference in range. The range in Ilford glass is found to be 18 ± 4 percent longer than in dry C.2 emulsion. The range of 36 Mev protons in NTB emulsion is calculated to be 8 ± 1.5 percent larger than in C.2 emulsion, on the basis of measurements for μ meson ranges.

The ranges of protons of energies up to 13.1 Mev in nuclear track emulsions were measured by Lattes, Fowler and Cüer,[3] with 50 μ thick B1 emulsion. Extrapolations[4] of these data were used by Bishop[5] to calculate masses of mesons whose

range in emulsion and initial momentum are known. The region of interest corresponded to proton ranges of approximately 4000 μ, or 31 Mev energy. For tracks of this length the extrapolation gave energy values accurate to only ± 8 percent.

In the present study the ranges of protons up to 39.3 Mev were measured in Ilford nuclear emulsions. C.2 plates used in this study are stated by Ilford Ltd. to have identical chemical composition to B1 plates.

Method. Monoenergetic protons were obtained from the circulating beam of the 184-inch Berkeley cyclotron in an arrangement shown in Fig. 3. Protons which struck a 1/8 inch by 1/16 inch by 3 inch copper ribbon target at say 30 inches from the cyclotron center scattered in all directions with a variety of energies. A C.2 plate placed behind a short channel at 80 inches radius recorded those protons which left the target in a backward direction with such an energy that their paths had approximately 25 inches radius of curvature in the cyclotron magnetic field. With an accurate knowledge of the field it was possible to calculate the energy of a proton entering normal to the edge of the plate. Plates were put at 80 inch radius for all exposures, and the target radius was varied to obtain different proton energies.

Plates were tilted approximately 3° from horizontal so that protons would enter the surface of the emulsion. Distortion of the emulsion upon processing prevents accurate determination of entrance angle if one uses particles coming through the edge of the emulsion. This tilt, plus scattering of the protons in the emulsion, made it difficult to find tracks in 200 μ plates which stayed in the emulsion for 7000 μ; hence the study was not extended beyond 39 Mev.

Plates were processed in 3:1 D-19 @ 68° F for 20 to 25 minutes, followed by shortstop and commercial hardening fixer. Plates suffered 50 ± 5 percent thickness shrinkage in processing, but negligible transverse shrinkage. Track lengths were measured both by eyepiece reticle and by dial indicator attached to the microscope stage. Corrections were made for angle of dip of protons in the emulsion.

Results. Results of the measurements are presented in Figs. 4 and 5. It will be noted that the data fit a straight line on log-log plot between 17 and 35 Mev, and fit the data of Lattes at 8 Mev. A least squares analysis gives for this portion the relation:

$$E_{(Mev)} = .250\ R_{(\mu)}^{.581} \qquad (1)$$

where the energy E is expressed in Mev, and the range R is measured in microns.

The original values of Camerini and Lattes[6], and a recent relativistically correct extrapolation by Aron[7] are indistinguishable from the present experimental results up to 35 Mev.

The effect of widely different humidity conditions on plates before exposure is indicated by the 3 points at 33.4 Mev, and the 2 points at 17.5 Mev. It was necessary to pump on plates in a roughing vacuum (approximately 150 microns pressure)

for at least 6 min. before exposure, so that moisture conditions were not accurately known. No difference was found between 6 min. and 6 hr. evacuation of 100 μ emulsions which had previously come to equilibrium in a normal Berkeley atmosphere (75°F, 70 percent R. H.) and these plates are therefore called "dry" in the present study. However, the 17.5 Mev point shows difference between 6 min. evac. of such a plate, and 6 min. evac. of a plate which had been exposed to several hours of rainy weather (95 percent R. H.). Large changes occurred as shown at the 33.4 Mev point, when 200 μ plates were given 6 min. evac. after 24 hr. exposure to 93 percent R. H. at 75°F in a $NH_4H_2PO_4$ constant humidity chamber. The 80 percent humidity point was obtained with a plate which had been maintained for 24 hrs. over wet NH_4Cl.

An approximate value for the range of protons in the glass backing of C2 plates was found by measuring the length of tracks which had travelled most of their range in the glass. Protons from the monoenergetic (± 100 Kev) beam of the Berkeley Linear Accelerator were used in this experiment. The range of the protons of approximately 30 Mev energy was found to be 18±4 percent larger in glass than in dry C2 emulsion.

Discussion. The numbers used above to illustrate the calculation of momentum from target and plate radius are only approximate because the protons did not follow a circular orbit in the radially decreasing cyclotron field. Protons leaving the target at a cyclotron radius r_1 at a small angle θ_1 from the backwards direction, enter the plate (r_2) at a different small angle θ_2 to perpendicular, and have a momentum given by the expression

$$Hr = \frac{1}{r_1 \cos \theta_1 + r_2 \cos \theta_2} \int_{r_1}^{r_2} Hrdr .$$

Stepwise integration is required to evaluate the integral. Fig. 6 shows a group of values of θ_1 determined graphically by stepwise trajectory plotting, starting with various values of θ_2. In the range-energy study only tracks entering the emulsion at 0° ± 5° were measured, so that the difference between cos θ_1 and cos θ_2 was negligible, and the expression for $\overline{H_r}$ could be written

$$\overline{H_r} = \frac{\sec \theta_2}{r_1 + r_2} \int_{r_1}^{r_2} Hrdr .$$

The value of the integral was obtained by numerical integration using absolute field calibration at 3 points by proton resonance to 4 gauss accuracy in the 14000 gauss field and flip coil measurements of relative fields at 1 inch intervals along a radius. The relative values at the different points in the flip coil measurements were estimated to be accurate to better than 0.1 percent. The field is shown as a function of cyclotron radius in Fig. 7. It was assumed, in the integration, that the cyclotron field had azimuthal symmetry.

The chief limit to the accuracy of the results was due to scatter in range of supposedly monoenergetic protons. The mean square scatter of 1 percent to 3 percent in ranges was partly caused by inaccuracies in measurement of entrance angle, partly by "skipping" of protons along the emulsion so that the actual beginning in the emulsion was missed, and sometimes caused by surface fog which prevented exact determination of the beginning of a track. Approximately half, however, could be accounted for theoretically by statistical straggling. Probable error of the mean due to scatter in range was less than 0.7 percent for each energy value. However, it seems unwise to claim better than $\pm$ 2 percent accuracy for the range-energy relation because of incomplete control of emulsion moisture, and ignorance of possible variations in emulsion composition.

The point at 16.3 Mev which lies 2 percent above the curve may be caused by "skipping" or perhaps an error in the radius to which the target was set. All other points lie within 1/2 percent of the curve defined by the relation (1). The relation is probably accurate to better than 2 percent for any batch of dry B1, B2, C2, C3, or G5 plates.

Although the above experiments were done only with Ilford plates, a point in the range-energy relationships for Eastman NTB emusion can be obtained as a by-product of measurements made by S. Jones on the range of μ^+ mesons. He finds the mean range of μ^+ mesons in NTB emulsion to be 664 μ. Previous measurements at Berkeley and at Bristol[9] gave the mean range of u mesons in Ilford C^2 emulsion as 614 μ. Since the range energy curve can be expressed in the form $mf(v)$ it follows that the range of protons having the same velocity as μ mesons is $mp/m\mu$ times as large. This range corresponds to approximately 36 Mev protons, as measured on our range-energy curve. Thus the range of a 36 Mev proton will be 664/614, or 1.08 times as large in dry NTB emulsion as in dry Ilford C2 emulsion.

REFERENCES

1 Lattes, Muirhead, Occhialini and Powell, Nature 159, 694 (1947)
2 W. Hartsough, E. Hayward, and W. M. Powell, Phys. Rev. 75, 905 (1949)
3 C. M. G. Lattes, P. H. Fowler, and P. Cüer, Proc. Phys. Soc. 59, 883.
4 V. Camerini and C. M. G. Lattes - Ilford Technical Data, revised March 27, 1948.
5 A. S. Bishop, Phys. Rev. 75, 1468 (1949).
6 V. Camerini and C. M. G. Lattes - Ilford Technical Data, February 1947.
7 W. Aron, Private Communication.
8 Private Communication from D. Sewell.
9 C. M. G. Lattes, G. P. Occhialini, and Powell, Proc. Phys. Soc., 61, 173.

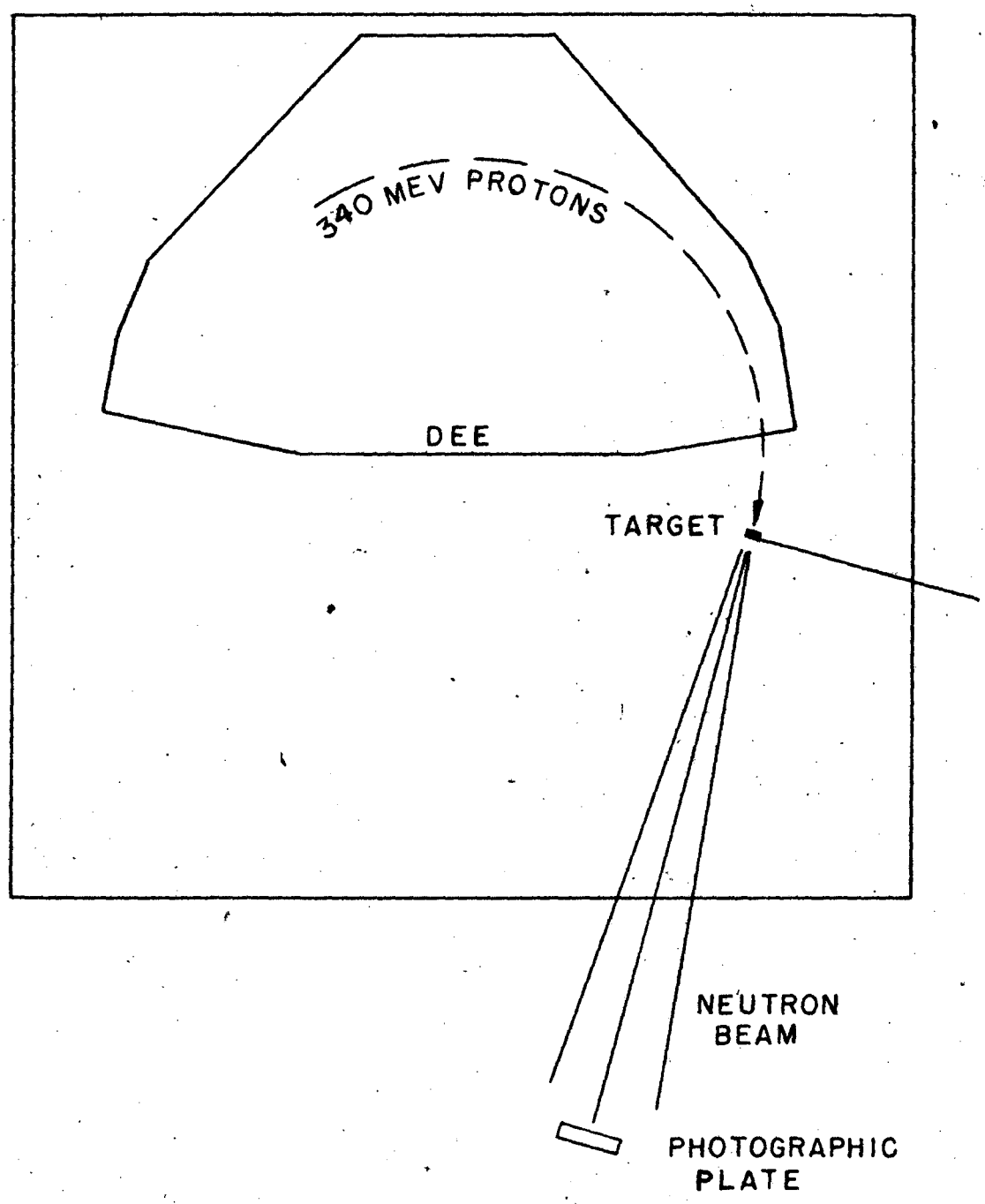

Fig. 1

Sketch showing position of photographic plates for exposure to neutrons from the cyclotron.

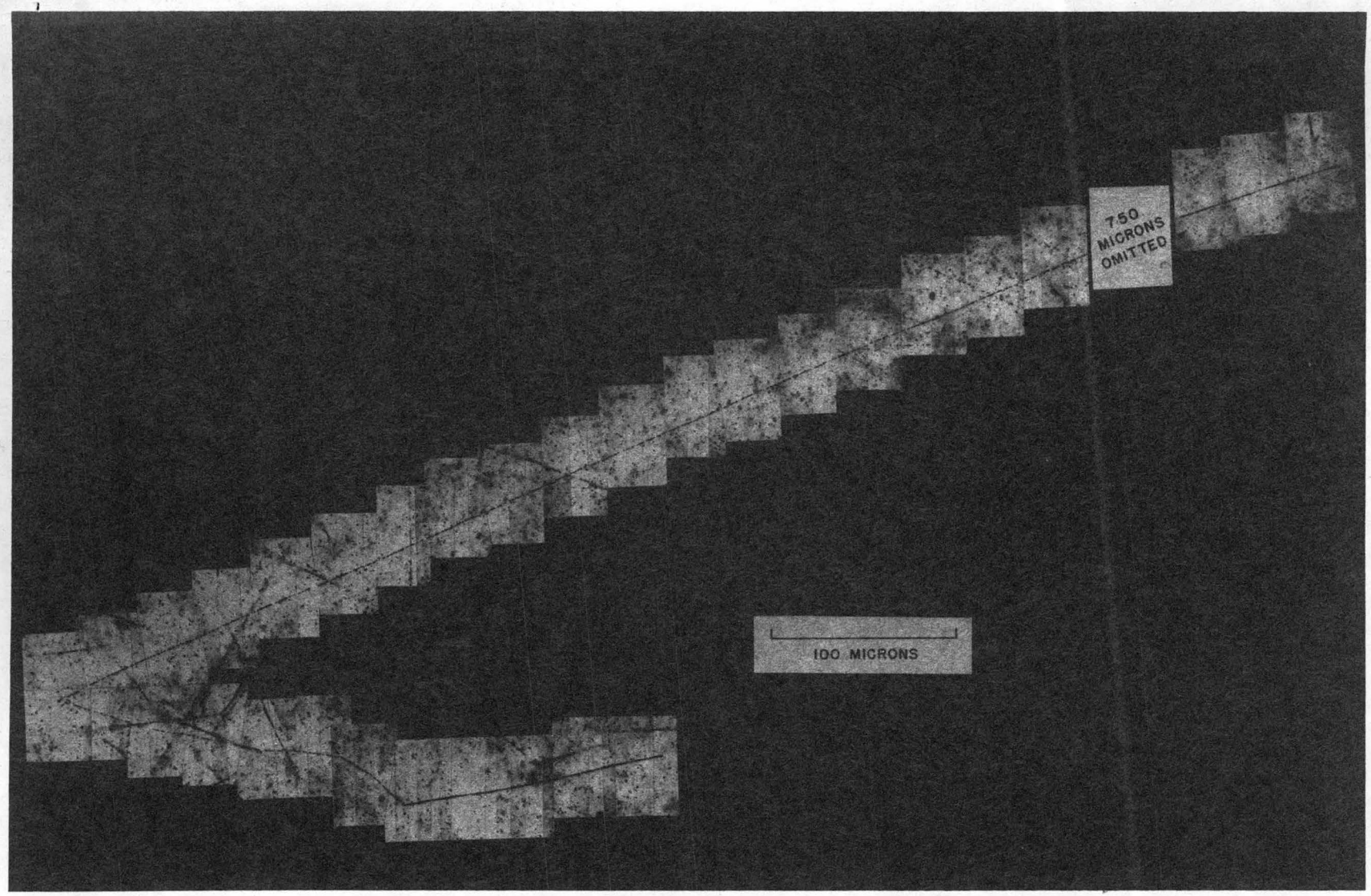

PHOTOGRAPHIC EMULSION STAR IN WHICH ONE OF THE OUTGOING PARTICLES IS A MESON.

FIG. 2

OZ 634

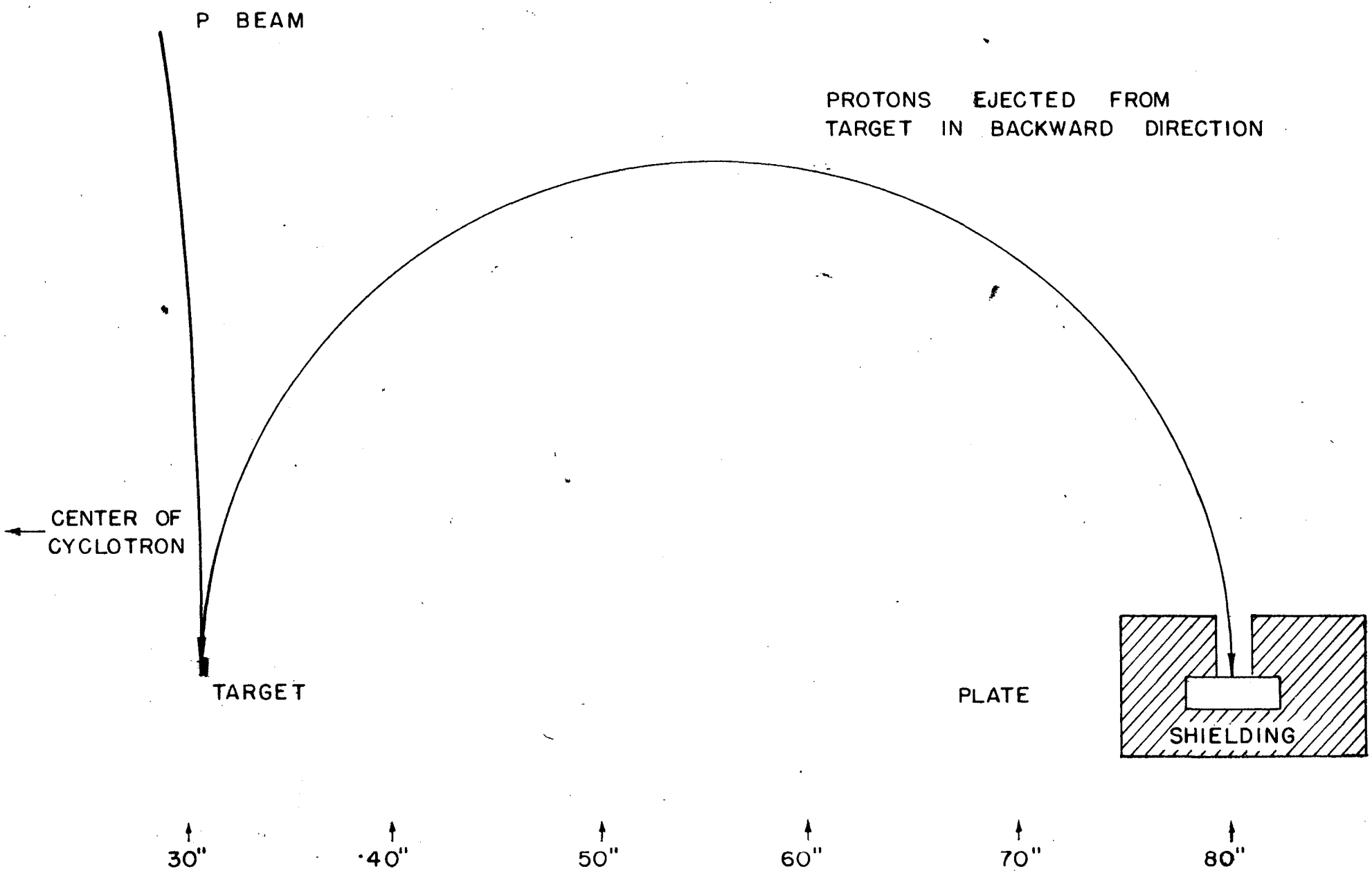
P BEAM
PROTONS EJECTED FROM TARGET IN BACKWARD DIRECTION
CENTER OF CYCLOTRON
TARGET
PLATE
SHIELDING
30"
40"
50"
60"
70"
80"

FIG. 3

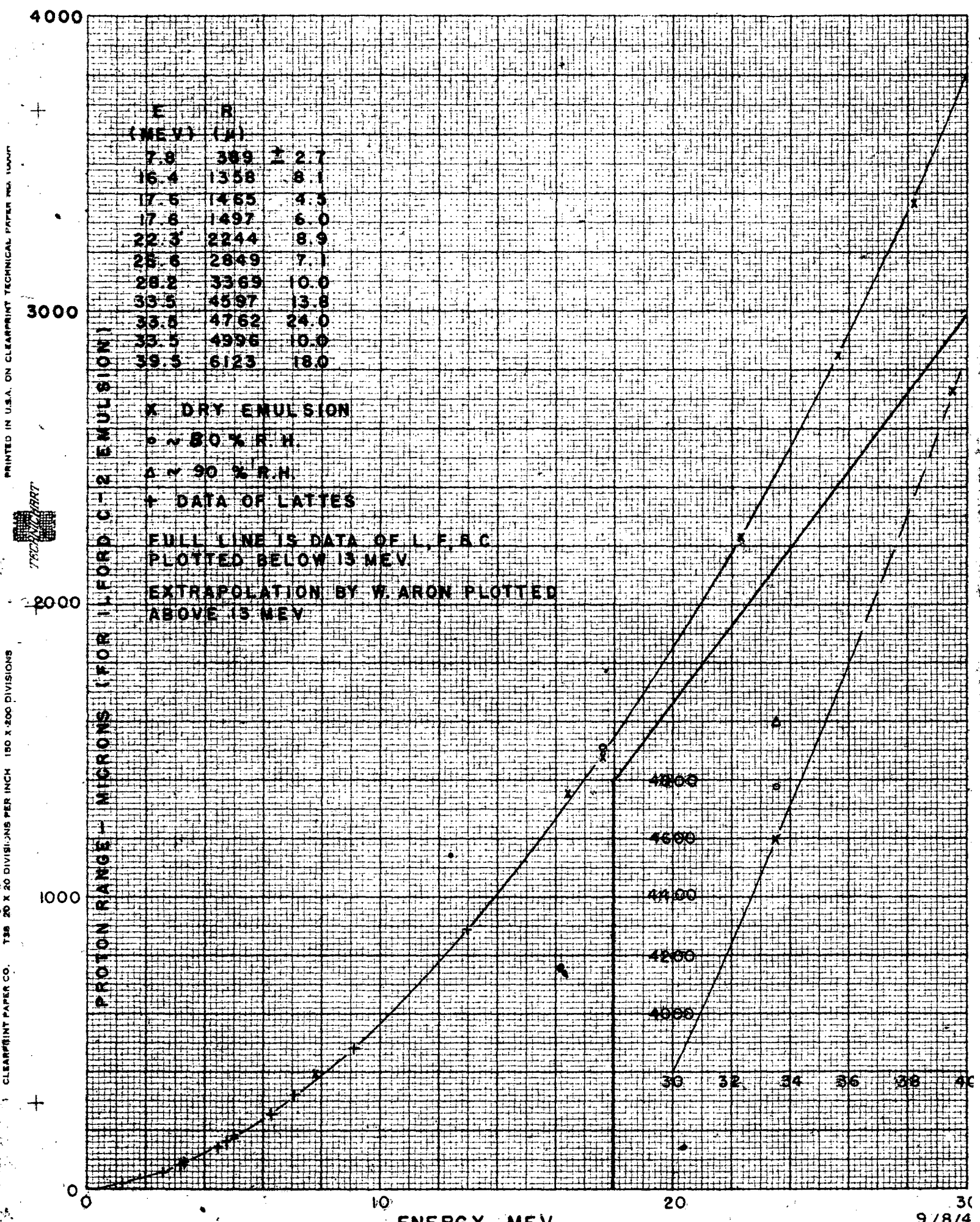

FIG. 4

9/8/4
14066-1

PRINTED IN U.S.A. ON CLEARPRINT TECHNICAL PAPER NO. 1000R
TECHCHART
CLEARPRINT PAPER CO. T38 20 X 20 DIVISIONS PER INCH 150 X 200 DIVISIONS

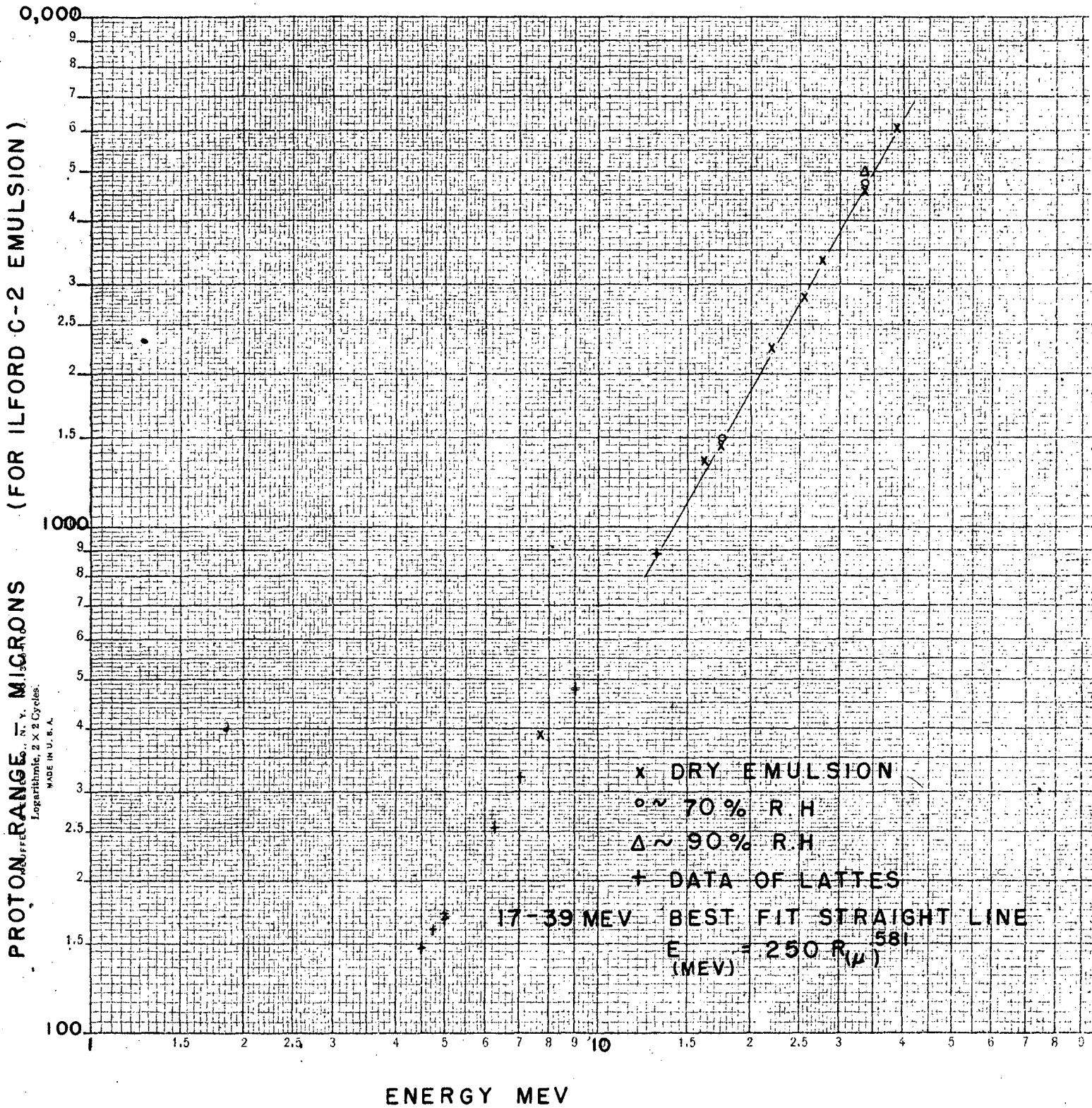
PROTON RANGE IN MICRONS (FOR ILFORD C-2 EMULSION)
ENERGY MEV
x DRY EMULSION
o ~ 70 % R.H
Δ ~ 90 % R.H
+ DATA OF LATTES
17-39 MEV BEST FIT STRAIGHT LINE
E (MEV) = 250 R(μ)^.581

FIG. 5

13922

ENTRANCE ANGLE OF PROTONS IN PLATES

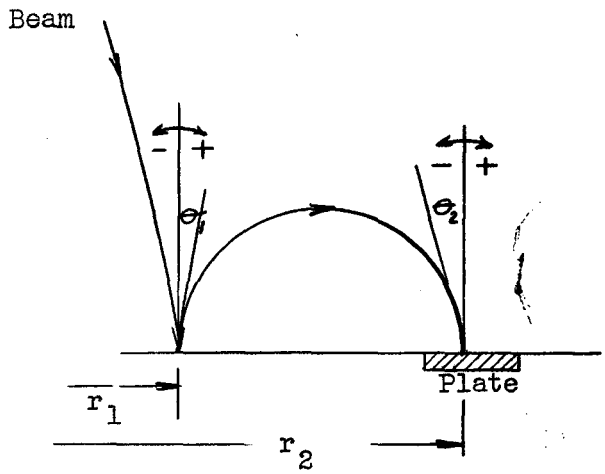

R_2	θ_2	R_1	θ_1
80"	0	27.3	-1° 45'
80"	-3°	27.4	$+1^\circ$ 15'
80"	$+3^\circ$	27.6	-5° 0'
80"	0	33.0	-2° 35'
80"	-3°	33.1	$+1^\circ$ 25'
80"	$+3^\circ$	33.2	-4° 45'
80"	0	37.7	-1° 45'
80"	-3°	37.7	$+1^\circ$ 25'
80"	$+3^\circ$	37.8	-4° 40'

Figure 6

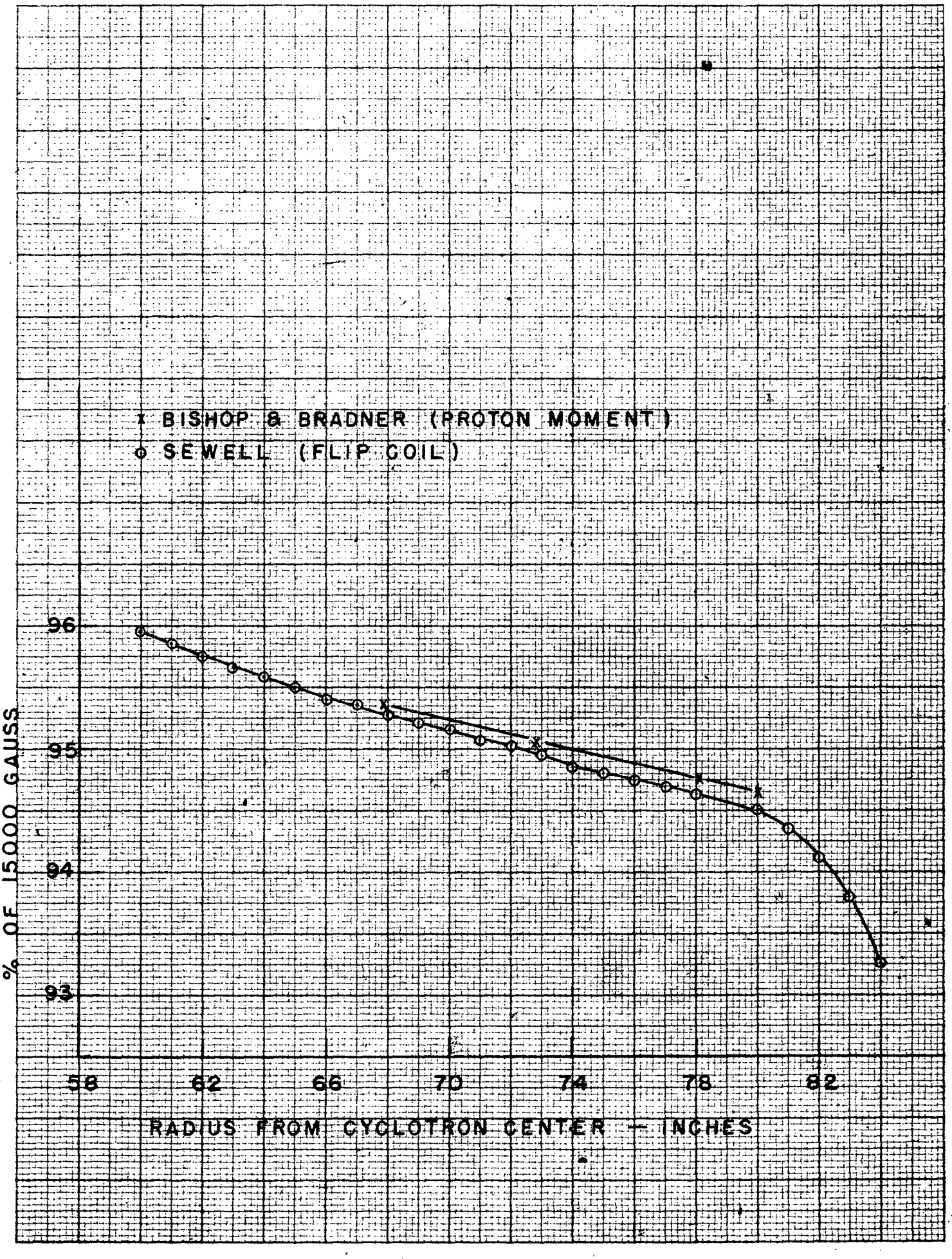

FIG. 7

PRINTED IN U.S.A. ON CLEARPRINT TECHNICAL PAPER NO. 1000H
TECHNICHART
CLEARPRINT PAPER CO. T38 20 X 20 DIVISIONS PER INCH 150 X 200 DIVISIONS

3. Measurement of Total Cross Sections of Nuclei for 40 Mev Neutrons

R. H. Hildebrand and C. E. Leith

The measurement of total cross sections of nuclei for 40 Mev neutrons has been continued using carbon detectors as described in the last quarterly report. In addition to checking many of the 16 cross sections previously reported, the following new elements have been investigated: Li, Be, S (from CS_2 and C), Cl (from CCl_4 and C) Ni, W, Hg, Th. The results of all measurements to date are summarized in project report UCRL 392 along with measurements by other investigators at 90 and 280 Mev.

Equipment has been designed and constructed for measuring cross sections of gases. The apparatus consists essentially of a six foot long tube containing the gas to be investigated at a pressure of about 200 atmospheres. This corresponds to approximately one-third of a mean free path.

DECLASSIFIED

DECLASSIFIED

4. Mass Spectrograph

L. Tolman

Sample System.

The new sample system mentioned in the last report has been installed and tested. The results were very good, the only trouble being a tendency for the leak to plug. This was remedied by the use of a spark coil.

Emission Regulator.

The emission regulator has been further modified so that the emission voltage may be varied over a considerable range but the potential between the trap and the case remains constant.

Magnet Current and High Voltage Verniers.

The vernier circuits previously mentioned have been installed and tested.

A new magnet current meter has been installed having ranges of 75, 150, 300 and 600 milliamperes, which, in conjunction with the Germanium Crystal Fluxmeter, gives quite accurate mass designations.

Deuterium.

Altogether five samples of deuterium were run for the Stewart Oxygen Company. Although the results were fairly good, many troubles were encountered, showing that this type spectrometer is not suitable for analyses in the low mass range.

CO_2.

A sample of CO_2 slightly enhanced in O^{17} and O^{18} was run giving the expected results.

Organic Samples.

Samples of pure methane, butane and hydrogen have been run in preparation for analyses of organic samples, giving results fairly close to the published data.

A known mixture of the above gases was then run but the results have not been determined as yet.

5. Application of Scintillation Counters to Detection of High Energy Particles in the 184-inch Cyclotron

L. F. Wouters

Neutron Cross Sections at 300 Mev.

Attenuation measurements in the 300 Mev neutron beam are nearly complete. In these experiments the neutron beam is monitored by means of a BF_3 chamber placed in the slow neutron flux created by the fast neutron collimator. The detector consists of a pair of anthracene scintillation counters in coincidence aimed at a paraffin scatterer placed in the neutron beam behind the attenuator. Detection occurs by coincidence counting of protons scattered at small angles; it is thus possible to insure a high energy detector cut-off by means of a thick (250 Mev equiv.) absorber placed between the coincidence counters as illustrated in Fig. 1.

Fig. 2 shows the results of the measurements obtained to date; as a whole the 300 Mev neutron cross sections are about 60 percent of those at 90 Mev, and show no marked differences in trend, except perhaps at the high Z end.

A detailed report of this work is being prepared for publication.

Apparatus Development.

It is expected to employ this type of counter telescope in a fairly comprehensive group of experiments looking toward more accurate evaluation of fundamental particle interactions at 300 Mev. Preliminary tests showed that a simple double coincidence arrangement is totally inadequate for use in the intended measurements. The design of more appropriate equipment was started at the beginning of this year; the telescopes will accommodate up to four scintillation counters, a typical set up including triple coincidence plus anti-coincidence.

The associated electronic equipment presently in final construction represents an intermediate stage in the development; Fig. 3 illustrates schematically one channel of four counters - three such channels will be available. Some characteristics of the individual items might be of interest.

Fast Scaler (Fig. 4)

Under certain counting conditions, the individual counting rates in the telescope units have been so high as to prevent individual monitoring, because of the relatively long resolution time of existing scalers (3-5 microseconds).

A new type of scaling pair was therefore developed, in which the multivibrator inter-coupling is achieved through an additional pair of cathode followers. This permits a very great decrease in coupling time constants, so that sharp pulses .2 microseconds apart are resolvable and can be recorded individually.

Coincidence Mixer (Fig. 5). This consists of a group of current-biased germanium diodes, each connected to a low impedance signal source which it is desired to mix. The action of a signal is to cut-off the bias current in its diode, all diodes must be cut-off simultaneously in order to register a coincidence. Anti-coincidence is obtained by means of a phase-inverter connected to the coincidence bank through a negatively biased diode. The effect of an anti-coincidence pulse is to make this diode act as a bypass path for the biasing current so that no net output signal develops.

The measured resolving time of this mixer between one non-coincident signal or one anti-coincident signal and the remaining coincident signals is about .05 microsecond, the measurement being limited by the quality of the available test pulse.

A high-frequency cut-off filter can be incorporated in the output circuit to prevent near-coincidences from being counted. It is adjusted to pass only pulses at least a certain fraction of the input pulses in width.

Pre-amplifiers (Fig. 6). The photomultiplier has associated with it a pulse-generating circuit; in certain counting techniques it is convenient to have pulses of uniform width and height. This is accomplished by a conventional two-stage amplifier followed by a heavily cut-off cathode follower. A fraction of the output is fed back positively to the input, so that pulses sufficiently great to overcome this bias "trigger" the circuit. The crystal diodes in the feedback loop ensure transient stability. A switch is provided which breaks the feedback loop and reduces output bias so as to convert the circuit into a strictly linear amplifier for scanning purposes.

Using the illustrated constants, pulses of 40 volts height, and .2 microseconds width are obtained; this then establishes the limit of resolution for the entire counting channel. The discrimination action is stable and very sharp.

This pre-amplifier represents a stage of design of six months standing; requirements and techniques have both advanced, so that with relatively minor additions, considerably greater resolution can be made possible. Thus, for operation at high background levels, such as exists within the cyclotron shielding, a similar circuit employing distributed amplifiers is to be tested. The specifications of this must call for a rectangular output pulse of 40 volts height and of .01 microsecond width which roughly matches the expected resolving time of the described crystal coincidence circuit.

High-Voltage Circuits. (Fig. 7). Considerable difficulty has been had in obtaining photomultiplier supplies of acceptable stability; a high-voltage high-sensitivity potentiometer (.1 volts per dio. at 1000 volts) proved convenient for testing this property. In the early scintillation counter experiments at this laboratory, a high-stability regulator circuit was used which showed less than 0.1 volts drift at 1000 v. in 8 hours of operation with normal room temperature fluctuations. Features of this circuit are being incorporated into a standard regulated supply, which should then show the same stability.

The remaining circuit components are quite standard items; the three channels are to be installed in the new 184-inch cyclotron counting room. Upon completion of tests on preamplifiers and high voltage circuits, a comprehensive report of scintillation counter instrumentation at the 184-inch laboratory will be issued.

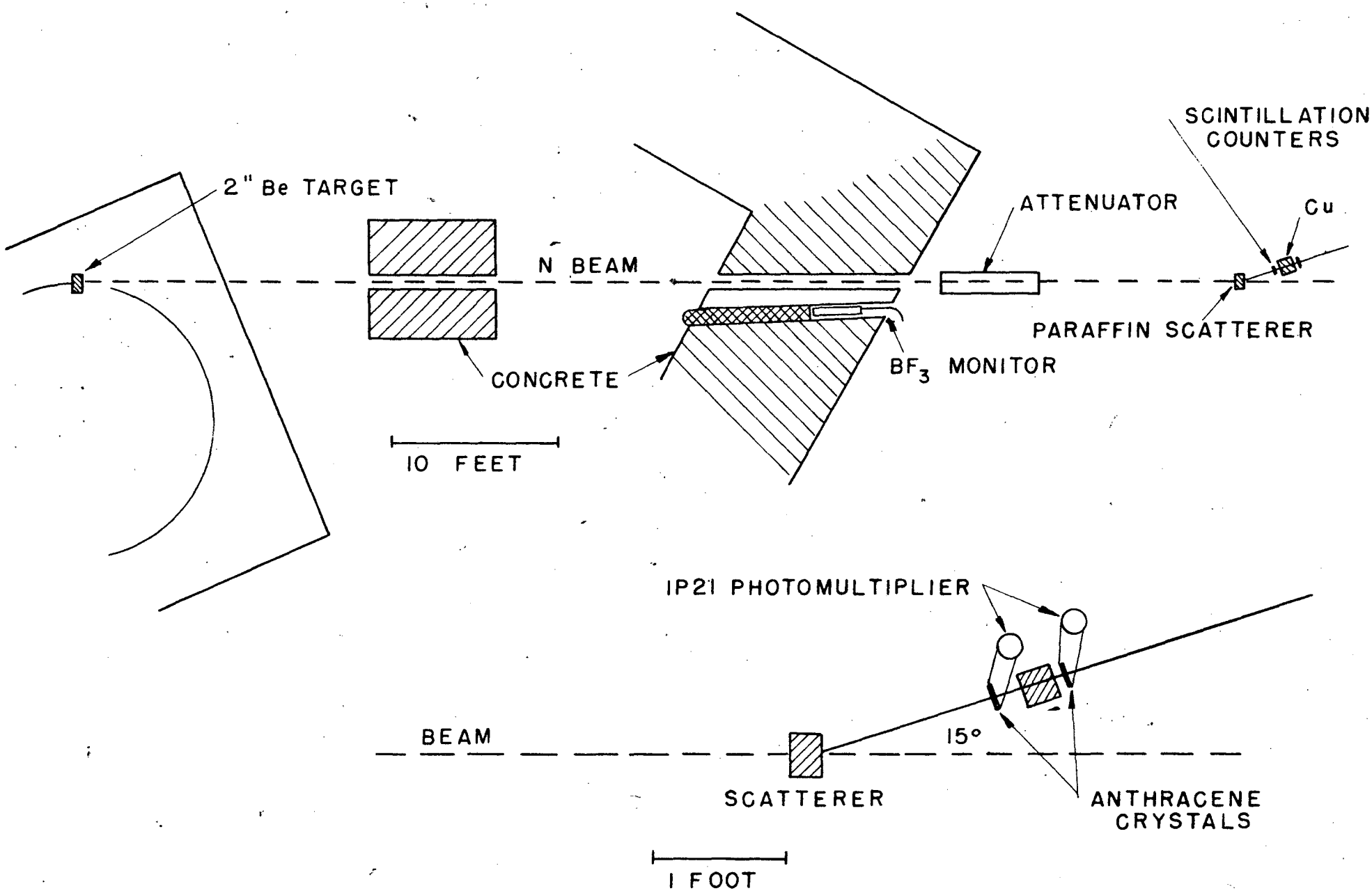

Fig. 1
Experimental arrangement for measurement of neutron cross-sections.

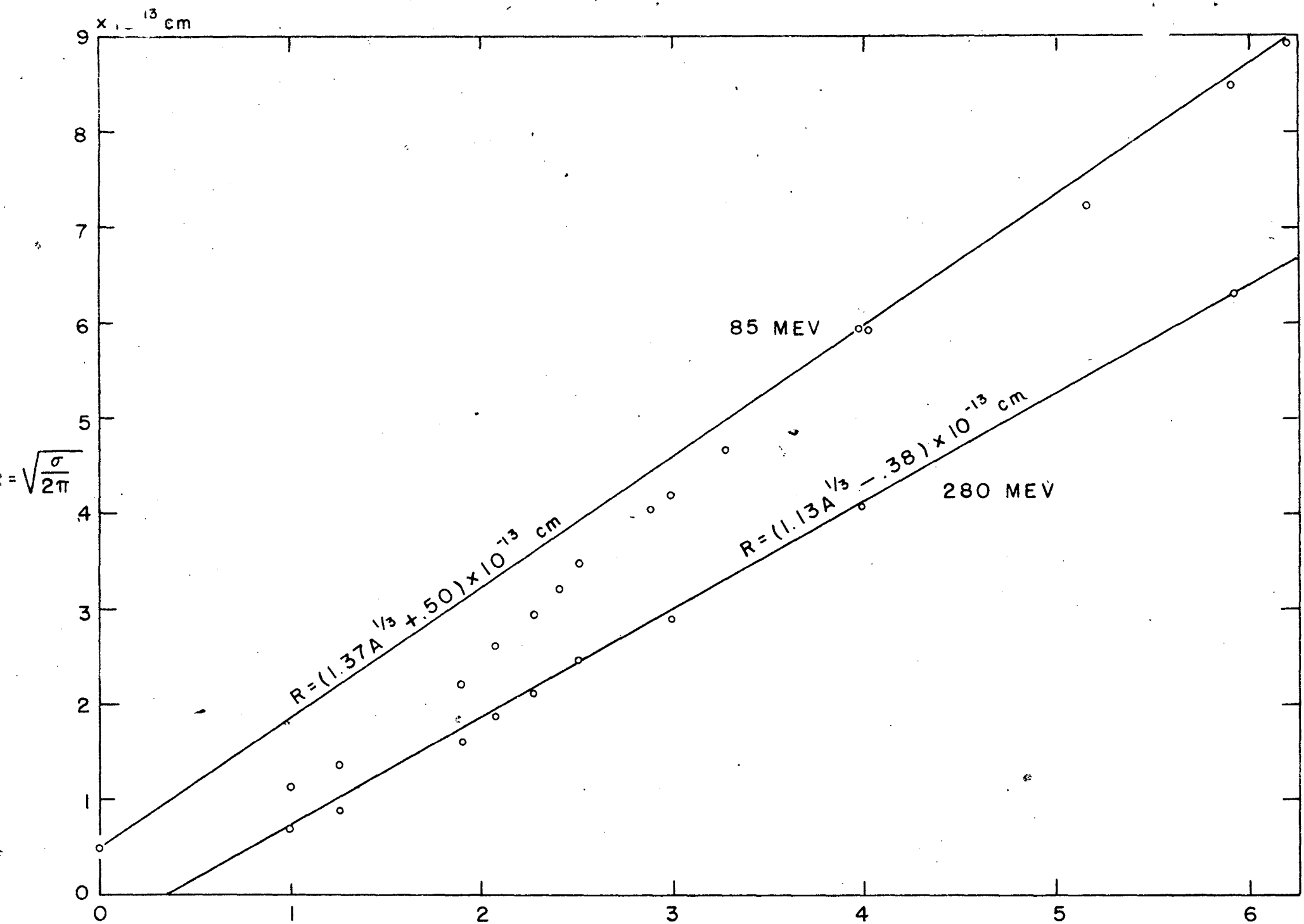

Fig. 2
Neutron cross-sections at 300 Mev.

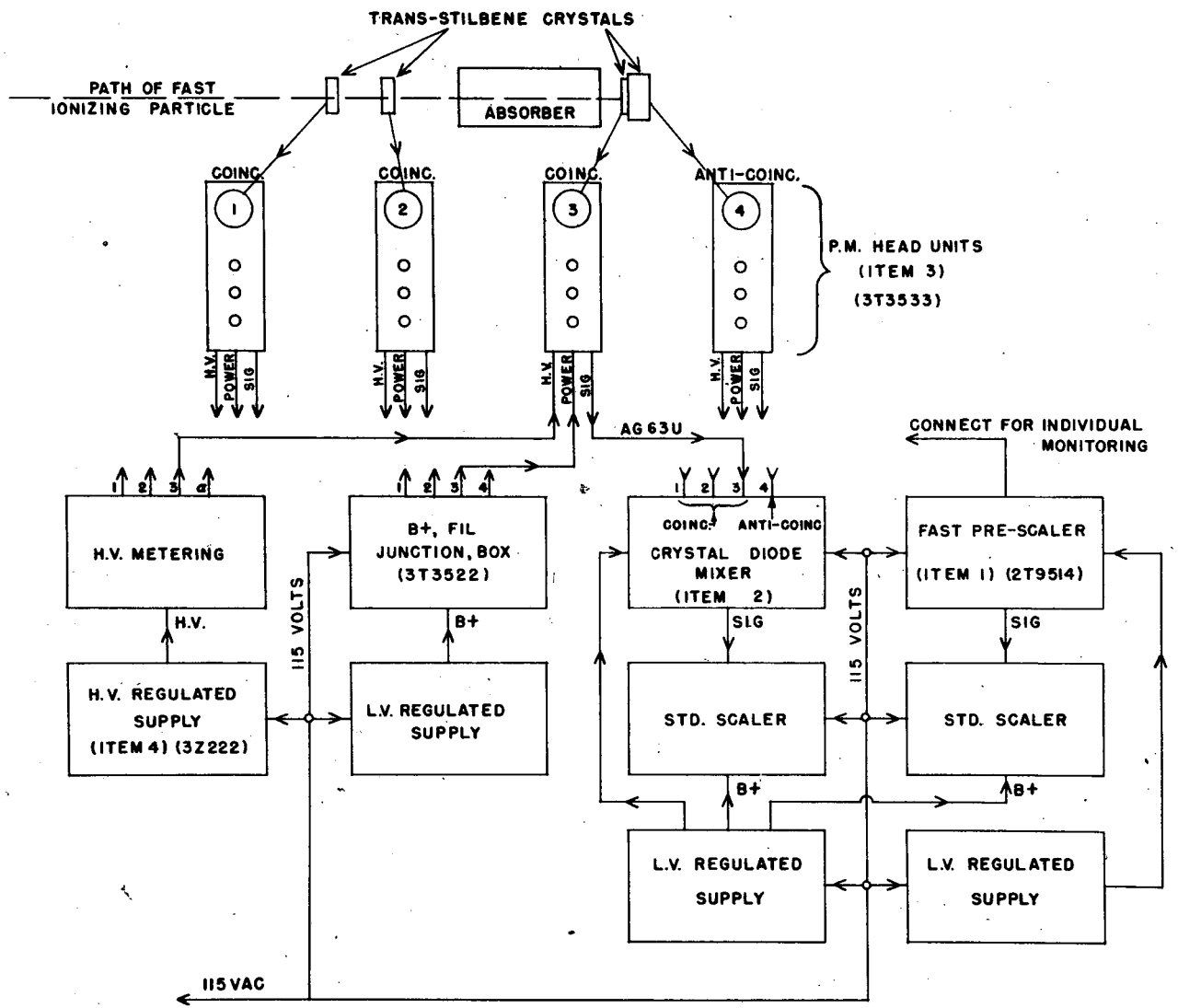

TYPICAL COUNTING CHANNEL CONNECTED TO RANGE-MEASURING TELESCOPE

FIG. 3

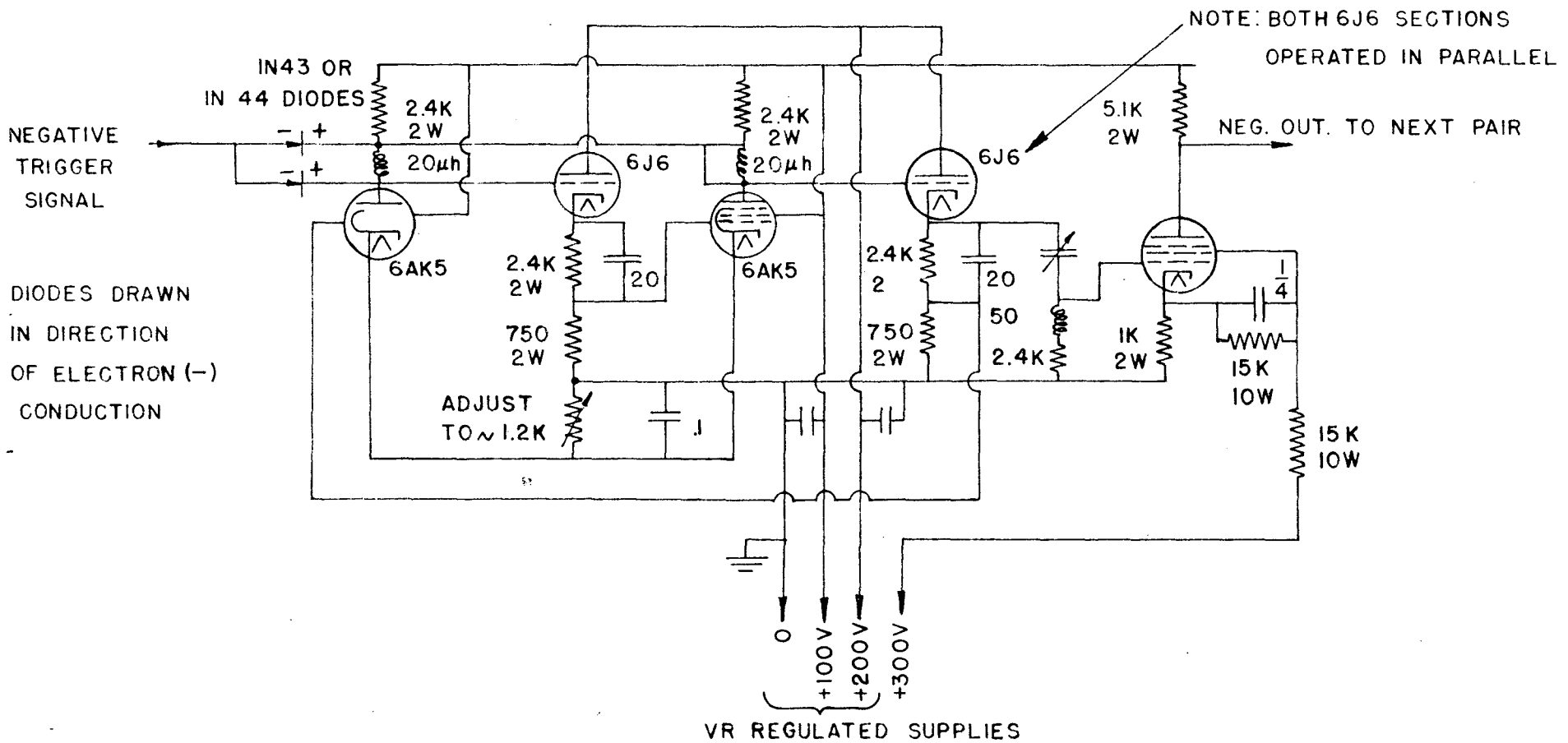

FIG. 4 TYPICAL FAST SCALING PAIR (2T9514)

14155-1

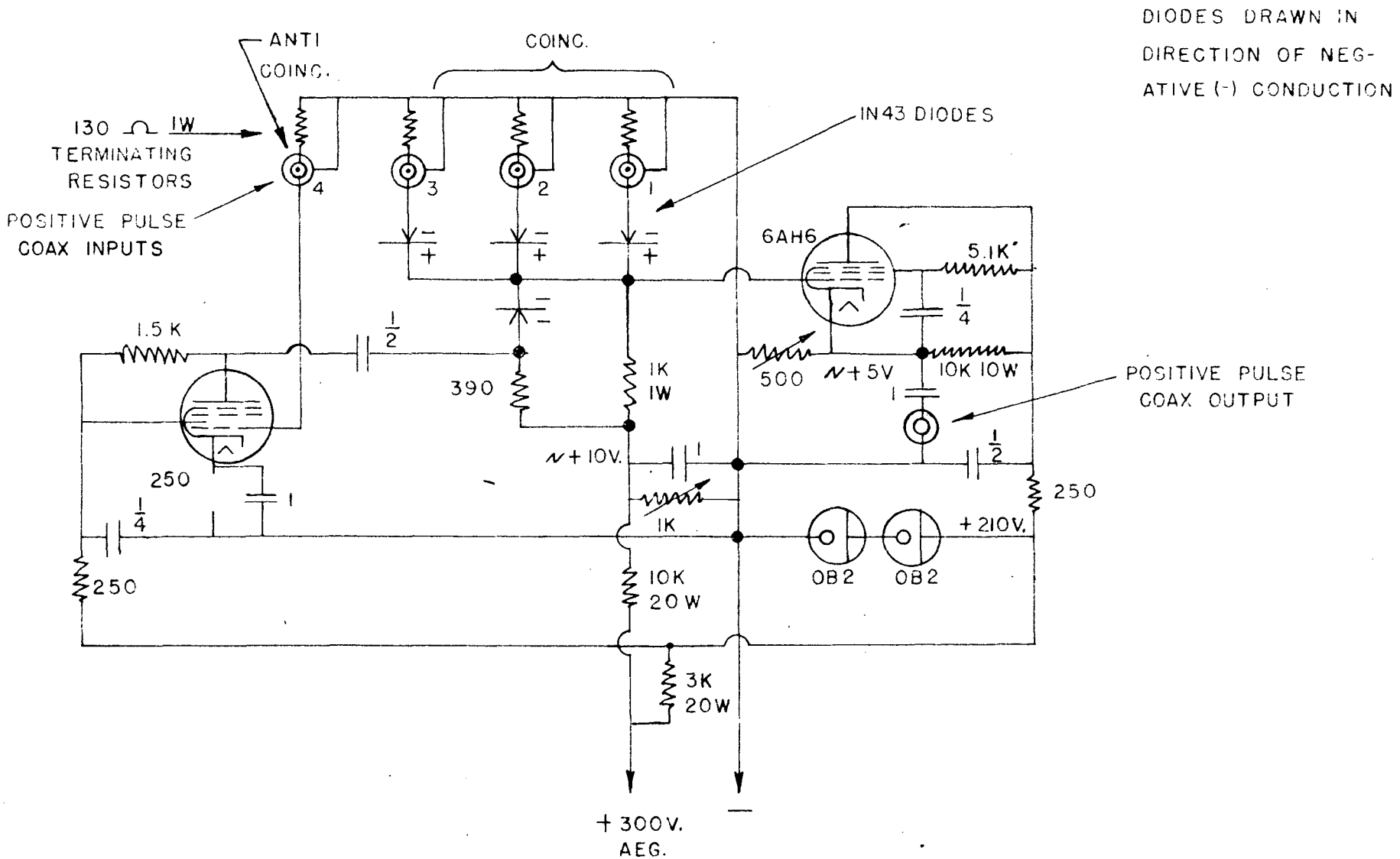

FIG. 5

COINCIDENCE MIXER

14156-1

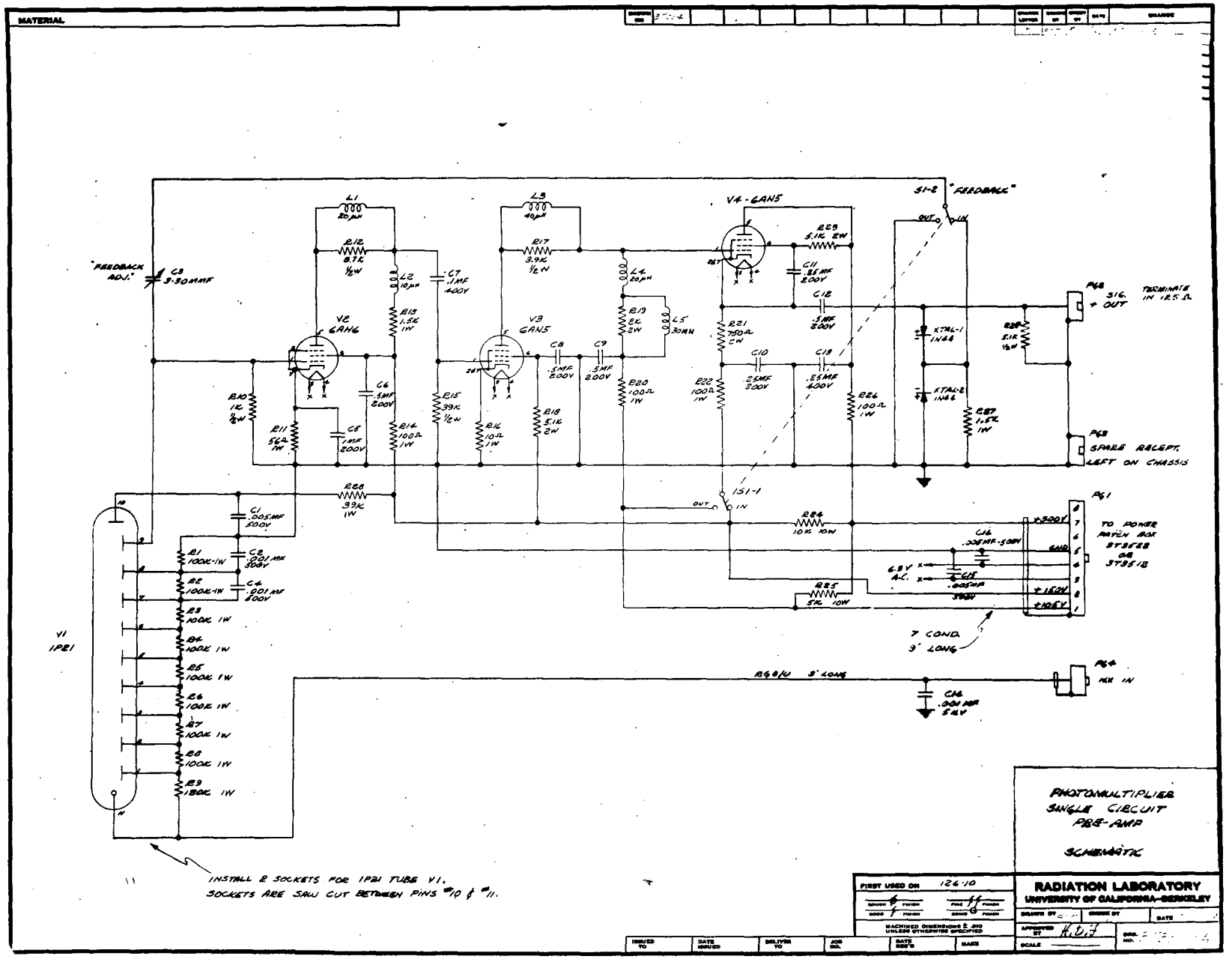
MATERIAL
"FEEDBACK ADJ."
C3 3-30 MMF
L1 20 μH
R12 8.7K 1/2W
L2 10 μH
C7 .1MF 400V
R13 1.5K 1W
V2 6AH6
C6 .5MF 200V
C5 .1MF 200V
R10 1K 1/2W
R11 56Ω 1W
R14 100Ω 1W
R15 39K 1/2W
L3 40 μH
R17 3.9K 1/2W
V3 6AN5
C8 .5MF 200V
C9 .5MF 200V
R16 10Ω 1W
R18 5.1K 2W
L4 20 μH
R19 2K 2W
L5 30 MH
R20 100Ω 1W
V4 - 6AN5
R23 5.1K 2W
C11 .25 MF 200V
C12 .5MF 200V
R21 750Ω 2W
C10 .25MF 200V
C13 .25MF 400V
R22 100Ω 1W
R26 100Ω 1W
S1-2 "FEEDBACK"
OUT
IN
XTAL-1 1N44
XTAL-2 1N44
R28 5.1K 1/2W
R27 1.5K 1W
P48 SIG. OUT
TERMINATE IN 125 Ω
P49 SPARE RECEPT. LEFT ON CHASSIS
S1-1
R28 39K 1W
C1 .005MF 500V
C2 .001 MF 500V
C4 .001 MF 500V
R1 100K-1W
R2 100K-1W
R3 100K 1W
R4 100K 1W
R5 100K 1W
R6 100K 1W
R7 100K 1W
R8 100K 1W
R9 180K 1W
V1 1P21
R24 10K 10W
R25 5K 10W
C16 .005MF-500V
C15 .005MF 500V
6.3V A.C.
P61
+300V
GND
+160V
+105V
TO POWER PATCH BOX ST3528 OR ST3512
7 COND. 3' LONG
RG8/U 3' LONG
C14 .001 MF 5KV
P64 HK IN
INSTALL 2 SOCKETS FOR 1P21 TUBE V1. SOCKETS ARE SAW CUT BETWEEN PINS #10 & #11.
PHOTOMULTIPLIER SINGLE CIRCUIT PRE-AMP
SCHEMATIC
FIRST USED ON 126-10
RADIATION LABORATORY
UNIVERSITY OF CALIFORNIA-BERKELEY
MACHINED DIMENSIONS ± .010 UNLESS OTHERWISE SPECIFIED
ISSUED TO
DATE ISSUED
DELIVER TO
JOB NO.
DATE REQ'D
MAKE
DRAWN BY
CHECK BY
DATE
APPROVED BY
SCALE
DWG. NO.

FIG. 6

OZ 635

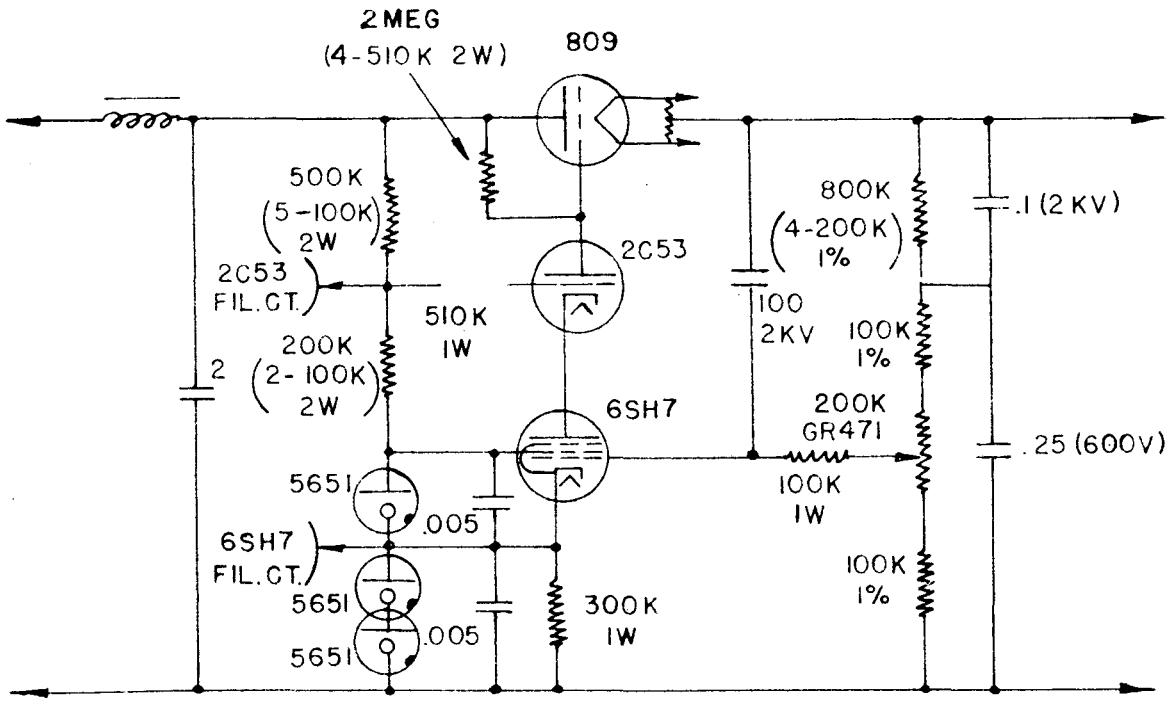
2MEG
(4-510K 2W)
809
500K
(5-100K)
2W
2C53
FIL.CT.
510K
1W
200K
(2-100K)
2W
2
2C53
6SH7
5651
.005
6SH7
FIL.CT.
5651
5651
.005
300K
1W
800K
(4-200K)
1%
100
2KV
100K
1%
200K
GR471
100K
1W
100K
1%
.1 (2KV)
.25 (600V)

FIG. 7

14157-1

6. Studies of Shielding and Radiation Fields of Accelerator

W. Nolan, W. Patterson, A. Redmond, J. Yater

Shielding of 184-inch Cyclotron.

Observations of the radiation in the concrete shielding have been made using detectors of the following types

(1) Indium foils, sensitive to thermal neutrons, and to resonance neutrons at 1.4 ev; (2) $Cu^{63}(n,2n)\ Cu^{62}$ detection, with a threshold near 10 Mev; and (3) $C^{12}(n,2n)C^{11}$ detection with a threshold at 20 Mev.

After characteristic initial transition effects each of these detectors demonstrates the same attenuation as a function of depth in the shield, in keeping with the expectation of an equilibrium radiation whose intensity at any depth is controlled by the most penetrating group of neutrons.

Fig. 1 is a plot comparing indium foil activation with carbon detector activation at a certain region of the shield.

In order to estimate the intensity of the high-energy neutrons which emerge from the outside of the shielding surveys have been made with a Bi fission chamber whose calibration has been estimated by determing its counting rate in an approximately known flux of high-energy neutrons at 0° azimuth. Observations show that flux densities of 0.5 to 3 per cm^2 per sec of neutrons over 50 Mev exist outside the shielding at various azimuths. This is not out of harmony with the estimated production and observed attenuation of such neutrons.

By testing the slow-neutron activation of indium foils placed against the outside face of the shielding with, and without, a cadmium backing, it was determined that most of the slow neutron intensity at the outside face is due to their production within the material of the shield, as distinguished from escape through the thinner roof slabs and subsequent downward scattering.

A more sensitive H-recoil survey proportional counter has been built and set into operation, together with U-, Th-, and Bi- fission survey counters for neutron intensity studies.

Radiation Field of Linear Accelerator.

Since the recent re-working of the Linear Accelerator and its shielding a rather extensive series of fast-neutron surveys has been made. These indicate the existence of regions in which the energy flux delivered by fast neutrons amounts to as much as 1000 Mev $cm^{-2}sec^{-1}$.

This indicates the provision of a roof shield and of more complete closure of certain apertures around the target area. Observation of the fast-neutron intensity vs. elevation definitely indicates that much of this neutron field does indeed come over the top of the present shielding wall.

FIGURE I

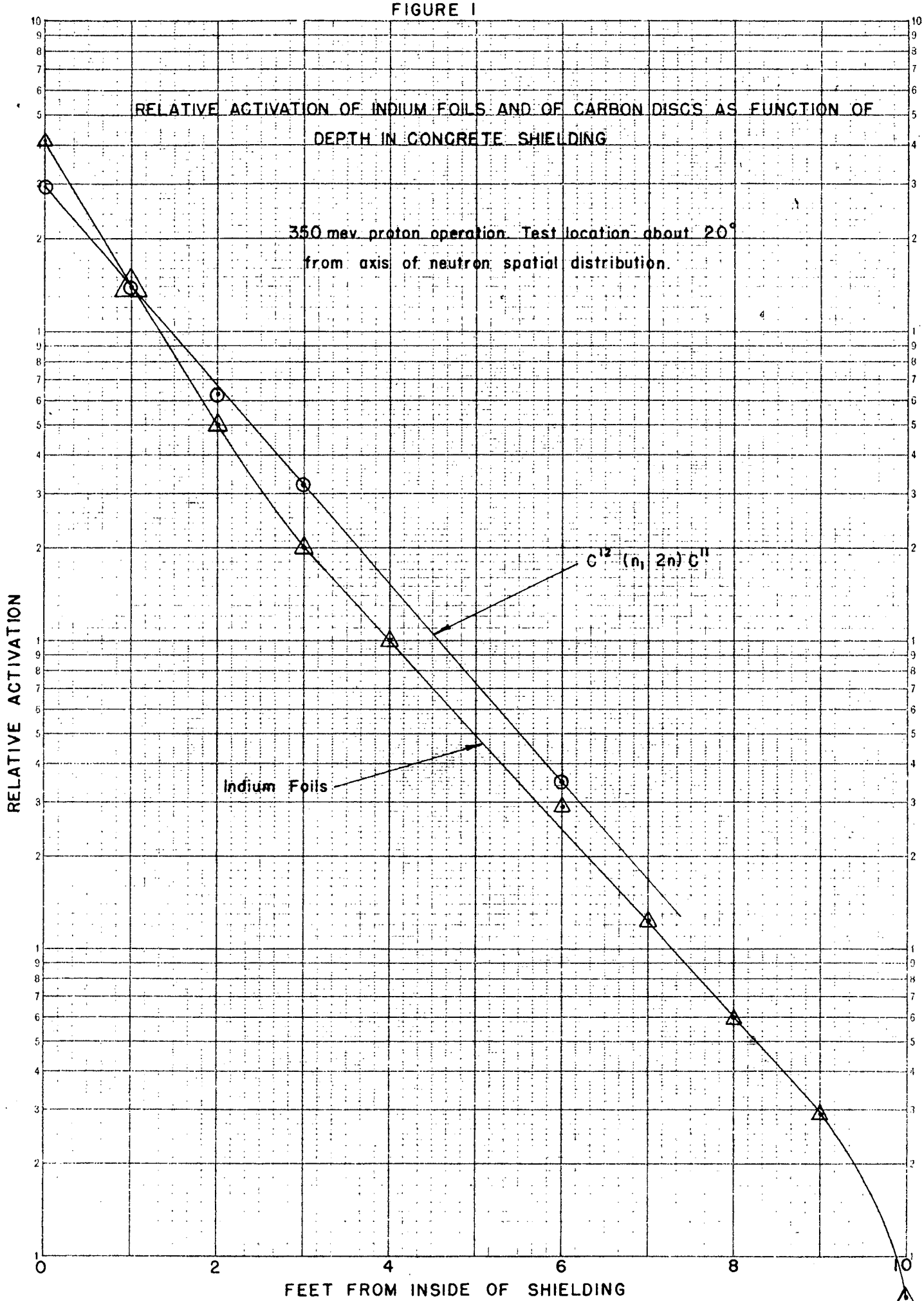

KEUFFEL & ESSER CO., N. Y. NO. 359-N83
Semi-Logarithmic, 1 Cycles X 6½ divisions.
MADE IN U.S.A.

15154-1

7. Proton-Proton Scattering -32 Mev

B. Cork, F. Fillmore, L. Johnston, W. Panofsky and C. Richman

Work has continued on the two p-p experiments one using proportional counters and the other using photographic plates. At the moment, 15,000 tracks from the photographic apparatus have been measured, so the probable error is now equivalent to that of the counter equipment. The symmetry in the differential scattering cross section about 90° in the center of mass system is excellent, indicating that no systematic errors are present in the technique. The cross section as a function of angle is still very flat beyond 30° in the center of mass system.

Since the rebuilding of the bombardment room, the counter apparatus has been realigned in a new position and some runs have been made on p-p scattering at 32 Mev. The data obtained with the new arrangement are consistent with the former results and with those taken by the photographic method.

8. Inelastic Scattering

C. Leventhal and A. Silverman

A multiple channel coincidence unit has been constructed in order to continue the work on inelastic scattering of protons on various materials. This work has previously been done with photographic plates. Thus far the data taken previously with photographic plates on the inelastic scattering of protons on carbon has been reproduced with results identical to the photographic plate work.

9. Final Results of the Measurements on the Half Life of the Positive π Meson

E. Martinelli

The reading of the plates taken by the method of Richardson, using a helical path in a magnetic field, have been completed. To date, approximately 2000 $\pi - \mu$ decay tracks have been tabulated. The results are given in the accompanying Table I.

TABLE I

Angular Points On	No. of $\pi - \mu$ Decays	Area Scanned (cm^2)
180°	296	87.6
540°	241	280
180°	352	116.8
900°	230	800

The half-life constructed from these data is $1.4 \pm (.15) \times 10^{-8}$ sec.

10. Short-lived Radioactivities

L. W. Alvarez

No further work has been done in this quarter on the 1/2 sec. α-activity induced in boron by high energy protons. So far it has been impossible to decide whether this activity is B^8 or C^9, but with the high intensities available now, this question should be decided with a few more bombardments.

11. Neutron Half Life

R. Mozley

A few positive results with the apparatus have been obtained in the last month. Electrons have been found to be stored in the magnetic field, as would be predicted from the theory of the experiment. It remains to be proved, however, that the observed electrons do come from the decay of the neutron.

12. Electric Detection of Mesons.

V. Ogren, L. W. Alvarez and R. Thomas

Work is continuing on the detection of delayed electrons from the decay of positive μ mesons. It is possible to observe the decay of the μ meson over a factor of 10^4 in intensity, and it is hoped that a very reliable value of the half-life will be available shortly. Work has been done to determine energy distribution of positive π mesons which come from targets of various atomic numbers under bombardment of protons of various intensities. The π's are detected electronically by a tracer technique, since whenever they come to the end of their range, they give off an electron with a 2 microsecond mean life. Since the range of the electron is very small compared to the range of the π's no appreciable error is introduced by assuming that the range of the electrons is zero. It should be possible to determine absolute cross sections for π meson production by numerical integration of two types of experimentally determined curves.

13. Absorption of Negative π Mesons in Hydrogenous Materials

W. Panofsky

Whenever a negative meson is captured in matter, it changes a proton into a neutron. When this process takes place in a nucleus, the nucleus will be left with a high degree of excitation, which usually results in a nuclear explosion called a star. If, however, the capture takes place in hydrogen, the resultant neutron cannot convert the excitation energy into kinetic energy and conserve momentum. It is therefore necessary that a second particle be emitted. Theoretically the most likely event to occur is the emission of a gamma-ray of 135 Mev energy. It is the purpose of these investigations to attempt to detect these gamma-rays. The experiments were conducted by bombarding a primary target in the proton beam of the 184-inch cyclotron and then letting the negative π mesons produced be absorbed in a secondary target composed of hydrogeneous material. The gamma-rays from this material were then sought for by means of the gamma-ray pair spectrometer of Moyer and York. Table I shows the results obtained.

TABLE I

Date	Secondary Target	Gamma-energy	Counts/hr.		
			From Geometry	$\sigma_{\pi^0} = 1/3\ \sigma_{\pi^-}$	Observed
7-8-49	CH_2	135 Mev	5100 f	6700 f	0 ± 2
8-28-49	LiH	135 Mev	1500 f	1400 f	$.5 \pm 2$
8-28-49	LiH	68 Mev	1500 f	1400 f	-1 ± 4

The results are complicated by the fact that only a fraction f of the total π^- mesons will be captured in hydrogen while the remainder will be captured in C or Li respectively. The observed null results can thus be explained by either assuming that f has a value less than 10^{-3} or that the gamma-ray postulated by theory does not actually occur. This point will be settled by conducting the experiments by using high pressure hydrogen as a secondary target.

14. Linear Accelerator Design

L. W. Alvarez and W. Panofsky

The bevatron injector is to be a linear accelerator which accepts protons of 1/2 Mev and takes them up to 10 Mev.' The University of Minnesota will use a similar machine as an injector into a 60 Mev linear accelerator. Studies are now under way to obtain information about the design of drift tubes in the low-energy range from 1/2 to 4 Mev. This range was not explored previously since our present linear accelerator accepts protons at 4 Mev.

15. Electron Multiplier

D. Cone

Experimental work is progressing on a transmission type electron multiplier which uses thin Be foils as the multiplying elements. This device should have an exceedingly small spread in electron transit time and should therefore give very much sharper pulses than the conventional RCA multipliers.

16. Proton-proton Scattering - 340 Mev

O. Chamberlain, M. Stern and C. Weigand

Proton-proton differential scattering cross sections are being measured using the 340 Mev external proton beam from the 184-inch cyclotron. Proportional counters, usually three in coincidence, are being used to detect the protons scattered. The scattering sample is of polyethylene. Graphite scatterers are also used to enable subtraction of the effect of carbon. Scatterers from 0.5 to 3 g/cm^2 polyethylene have thus far been used.

An attempt has been made to count the single protons emerging from the polyethylene target using three counters in coincidence as a counter telescope. This has been successful only to an accuracy of about 20 percent. A variable absorber has been placed before the last counter of the telescope and from the absorption curve (counts per second plotted against the thickness of absorber) the cross section can be determined. The counting rate goes up slightly as zero absorber is approached, indicating a small but significant component less penetrating than protons. It is this soft component that limits the accuracy of this technique.

More success has been obtained using the coincidence technique involving both protons of a single proton-proton scattering. In the laboratory coordinate system the two protons emerge from the scatterer at slightly less than 90° from one another. One counter is placed to detect one proton and a telescope of two counters is used to detect the other proton. All three counters are arranged in triple coincidence.

This method is most useful, though due to the shortness of the beam pulse the accidental coincidences are still appreciable. Even with coincidence counting rates as low as 0.1 counts per second the accidental coincidence rate (due mainly to scattering from carbon) is 1/3 of the coincidence rate from hydrogen.

Thus far the measurements extend from 20° to 70° from the beam in the laboratory coordinate system. With existing equipment (and existing background conditions) it will not be possible to extend this range appreciably. The limitation at 20° is due to the extremely large carbon scattering near the beam - the so-called diffraction scattering. The limitation at 70° is due to the short range of the protons scattered at wide angles from the beam. When the polyethylene target is made thinner than the proton range the background exceeds the effect from the target. Even the coincidence technique is inadequate to remedy this difficulty. Two steps toward extending the range of angles measurable are mentioned below.

It is hoped that this situation characterized by low counting rates and appreciable accidental coincidence rates may soon be changed. The use of a thorium foil (in place of the electric pulsed deflector) has yielded sufficient external beams in a beam pulse time of about 20 μ sec. This time is long enough to make high speed scintillation counters attractive. Apparatus of this type is now being constructed, making use of very fast distributed amplifiers. With very fast counters it is believed that the coincidence technique will be much more powerful and measurements to 10° and 80° (laboratory coordinates) should be

measurable.

A second means for approaching small angles from the beam is the use of a liquid hydrogen scattering target. This will probably be tried using a liquid hydrogen target now being designed for another experiment.

Results to date are given in Table I, expressed as cross section for scattering into unit solid angle at various angles from the beam. The cross sections at angle θ and angle $180^{\circ} - \theta$ are guaranteed to be the same.

TABLE I

Angle from Beam (Center of Mass System) degrees	Differential Cross Section (Center of Mass System) millibarns per steradian
43°	5.0 ± 1.5
49°	5.0 ± 1.0
62°	5.0 ± 0.5
90°	4.8 ± 0.5

17. Neutron-proton Scattering - 270 Mev

E. Kelly, C. Leith and C. Weigand

Neutron-proton differential scattering cross sections are being measured using the external neutron beam from the 184-inch cyclotron. The neutron beam is incident on a polyethylene target; a telescope of three proportional counters in coincidence is used as detector of the struck protons. Since the neutron beam used has a wide distribution of energies, extending from 340 Mev to very low energies, it has been necessary to place before the last counter of the counter telescope an absorber (tungsten). For each angle at which the scattered proton intensity is to be measured the absorber thickness is adjusted to absorb just the protons scattered by a 200 Mev neutron. The results obtained in this way are some sort of average cross section for incident neutrons from 200 to 340 Mev. The introduction of an absorber in the counter telescope causes the counting efficiency to be poorly known (due mainly to multiple Rutherford scattering in the absorber) until it can be measured. This measurement has been made as a by-product of the proton-proton scattering measurements for which a mono-energetic beam was available.

Results given in Table I are subject to the following contingencies. They are based on the assumption of 30 mb total neutron-proton scattering cross section for the effective average energy, considered about 270 Mev. They are subject to some error (not included in the errors given) due to error in determining the counting efficiency.

This error is a smoothly varying function of the angle, and its probable value is about 20 percent near 180 degrees and about 5 percent near 90° (center of mass).

TABLE I

Angle of Scattering of Neutron from Incident Neutron Beam (center of mass coordinates)	Scattering Cross Section per Unit Solid Angle (center of mass coordinates)
degrees	millibarns per steradian
180	12.9 ± 2.2
170	7.5 ± 0.8
159	6.1 ± 0.4
149	4.2 ± 0.4
139	4.0 ± 0.4
128	2.3 ± 0.4
118	1.6 ± 0.3
108	1.6 ± 0.2
98	0.8 ± 0.2
87	1.5 ± 0.2
78	1.5 ± 0.5
68	1.4 ± 0.4
58	0.8 ± 0.5
48	2.3 ± 0.6
39	2.6 ± 0.6

18. Fission Excitation Functions Using Charged Particles

J. Jungerman

Fission cross sections of U^{238}, U^{235}, Th^{232}, Bi^{209}, and Au^{197} for protons (to 340 Mev), deuterons (to 190 Mev), and alpha-particles (to 380 Mev) have been measured as a function of energy. The external beams from the 184-inch and 60-inch cyclotrons have been used. Current integration has been based on the use of a Faraday cup.

Although more work may be done using the 30 Mev protons from the Linear Accelerator, a complete report will soon be issued under the number UCRL-436.

Proton fission cross sections are measured only in the range 230 to 340 Mev.

Deuteron fission cross sections of U^{238}, U^{235}, and Th^{232} show an apparent threshold at about 8 Mev corresponding to coulomb barrier penetration, and roughly constant fission cross sections above 40 Mev. Bi and Au show thresholds at 60 and 120 Mev respectively.

Alpha-particle fission cross sections of U^{238}, U^{235} and Th^{232} show apparent threshold (barrier penetration) at about 20 Mev while Bi and Au show thresholds at about 60 and 90 Mev respectively.

In general, at high energies, the α-particle fission cross sections are comparable or larger than the deuteron cross sections, and the proton cross sections are lower than the deuteron cross section by nearly a factor or two.

19. Production of Li^8 by Charged Particle Bombardment

S. C. Wright

Cross sections for the production of Li^8 by bombardment of several elements with deuterons (to 190 Mev) and protons (to 340 Mev) are being measured in the external 184-inch cyclotron beams. The Li^8 nuclei are produced when the beam traverses the gas of a proportional counter; they are detected by observation in the proportional counter of the characteristic α-particles from Be^8 which appear with 0.9 second half-life.

Tentative results for the production cross sections are given in Table I below. Cross sections for Li^8 production in microbarns

TABLE I

Elements	C	N	Ne	A	Kr	Xe
190 Mev deuterons:	1000	500	300	160	50	20
340 Mev protons:	1000	800	300	300	80	30

II ACCELERATOR OPERATION AND DEVELOPMENT

1. 184-inch Cyclotron

James Vale

Operation.

The demand for operation upon the 184-inch cyclotron has been especially heavy during the past three months. This is normal for the summer months because of school vacation. This enables students to devote more time to experimental work and also enables experimenters from other institutions to make use of the facilities of the cyclotron. Therefore, practically all development work on the cyclotron has been restricted to the drawing boards. During this period the cyclotron was operating for an average of about 96 percent of the time that the operating crew was on duty.

Probe Radiation Alarm.

Another step in radiation protection has been the installation of a permanently mounted, 110 volt a.c. operated, ionization chamber located at the probe lock for the monitoring of targets after bombardment in the cyclotron. This supplements the portable meter used previously and, in addition, has an alarm which rings whenever the radiation exceeds a predetermined set level.

Deflected Beam Collimator.

A collimator whose angle could be adjusted was needed for the deflected beam. The best location for this collimator seemed to be in the tube in the concrete wall through which the beam passes. However, in order to keep the background radiation in the cave to a minimum, no cracks or space could be left around the outside of this mechanism for its movement. The problem was solved by means of a series of cylinders eccentric at one end only, and fitting into one another. Now by counter rotation of pairs of cylinders, the hole in the innermost one would essentially pivot about one end and thus change its angle with respect to the axis of the fixed tube mounted in the concrete shielding wall. One pair of cylinders allows the collimator hole to tip vertically and the other pair allows it to be swung horizontally. These motions permit the collimator to be aligned accurately and quickly with the beam directions.

2. 60-inch Cyclotron

Thomas M. Putnam, Jr.

The 60 inch cyclotron was shut down on April 25, 1949 for a complete rebuilding program. This rebuilding was necessitated by a burn-out in a section of the east dee stem liner. Plans had been under way for over a year for this particular rebuilding program but the burn-out forced us to go ahead earlier. This burn-out was the fourth in less than four years and was attributed to thin copper (1/32 inch) and inadequate cooling on the liners. The water lines were spaced 4 inches apart and were soft soldered to the copper. With excessive heat due to moderately high power (100 KW), the soft solder joints apparently gave way and hot spots occurred, leading to an eventual burn-out in the liner. The rebuilding program includes:

Magnet Pole Tips. The magnet pole tips have been increased in diameter from 60 inches to 72 inches based on model tests which showed a possible gain of approximately one percent in the field strength at the exit strip radius (25 inches). Field plots made after the pole tips were in showed the actual gain to be approximately 0.9 percent, reducing the field fall-off from 5.7 percent to 4.8 percent at the exit point.

Dee Stem Covers. New dee stem covers have been made of 1/8 inch copper plate in place of the 1/32 inch mentioned above and the water lines have been hard soldered. Two water cooling circuits are being used in place of the one used in the past.

Dee Stem Tank Liners. New dee tank liners have been fabricated of 1/8 inch copper plate and the water lines have been hard soldered, with two circuits being used in this case also. Improvements have been made in the r.f. connections as well as the mechanical structure.

Grounding Spiders. New spiders have been patterned after the old spider except for knife-edge joints on both the outer and inner contacts and more rugged construction. The knife edges and the areas of contact on the liners have been silver plated with a portable silver plating unit. All r.f. joints have been treated the same way.

Vacuum Chamber Liners. New liners have been fabricated and are very much the same as the old, with the exception of the transition section to the dee stems which had to be modified to allow for knife-edge joints.

Transmission Line and Loop House on the East Dee Side. Because of the high currents carried on this transmission line and on its coupling loop, it has been rebuilt with knife-edge joints and heavy copper in place of the light aluminum lines that were used previously.

Water Cooling Piping and Flow Switch System. A complete revision of the flow switch system was deemed necessary in order to protect the instrument and allow more adequate water cooling. A new type of flow switch has been designed and

perfected and is being installed at each location.

Complete Rewiring on All Control Circuits and Installation of New Control Units. Because of recurrent shorts and crowded conditions at all rack locations, a complete rewiring of the entire cyclotron control system has been undertaken. All control circuits have been revised and altered to conform to present standards and procedures used by the crew. New gutters and conduits have been put in with adequate additional spare wires to each location. The new control units that have been installed include:

a. Two complete beam amplifer and integrating channels.
b. An Esterline Angus recorder and amplifier for recording the character of the beam during bombardments.
c. New arc control and regulator units with 600 V. 6 amp. and 3000 V. 1 amp supplies being made available for the two types of ion source arcs in general use here.

Dees. New dees have been fabricated and include more rugged connections for carrying the r.f. currents, removable and adjustable feelers with the major change being a switch to the external type of deflector, as compared to the deflector within the dee that has been used here for the past ten years.

Vacuum Forevac System. The forevac has been redesigned utilizing the three existing pumps in somewhat different fashion than has been used previously. One pump will be used only for finishing in normal operation with two pumps being used only for "rough down" procedures.

Relocation of Building Power Distribution Transformers. By moving the main power transformers outside the laboratory, it has been possible to relocate the oscillator plate power transformer and the associated constant current network providing more adequate cooling for these units.

Oscillator Plate Power Rectifier. The rectifier has been rebuilt to use 857B mercury vapor rectifier tubes in place of 869B tubes. This will enable us to raise the power input to the oscillator from 125 KW to 175-185 KW.

It is expected that with the major revisions in r.f. connections and water cooling system that the cyclotron can be normally operated at the higher power level mentioned above with a consequent increase in beam output. The improved shape of the magnetic field should also increase the beam output considerably. It is expected that the cyclotron will be back in operation early in September.

3. Synchrotron

Marvin Martin

Synchrotron Performance.

During the past quarter, two general machine shutdowns have occurred. The first was intentional in order to replace a considerable amount of temporary equipment with a better designed permanent installation. The items which were changed are given in the following list:

1. Additional magnet winding clamps installed to prevent motion of the cable.
2. Octant compensating coils replaced with heavier gauge wire.
3. Remotely controlled flux bar reactors installed.
4. "n" coil adjustments installed in control room.
5. Beam integrating meter provided in control room.
6. Diffusion pumps replaced with stiffer structure to reduce vibration.
7. "n" coil lead terminal block moved out of beam.
8. Vacuum chamber inspected for insulating patches.
9. Bias coil covers and reversing switch installed.
10. Size of fuses in compensating circuits increased.
11. Patch panel and time delay controls in control desk incorporated.
12. More adequate insulation on tie bolts installed and tie bolt grounds located and repaired.
13. Butyl rubber segment connectors installed.
14. High voltage bleeder in capacitor room removed.
15. Door signal pickup redisigned to prevent possibility of high voltage reaching the control desk in case of insulation failure.
16. Blower to cool injector segment installed.

The second shutdown was caused by a crack in the injector quartz tubulation flange which necessitated replacing this segment of the donut.

Machine output has increased to 2300 R/hour at 1 meter from the center of the beam. This figure is obtained by multiplying the Zeus meter reading by 100, which factor is based on a rough calibration of the meter against actual ionization which would be measured by a meter small compared to the beam diameter.

An experimental injector power supply was tested which permitted the operator to shape the injector voltage pulse in an attempt to match the rising magnetic field. The theoretical slope of the injector voltage versus time curve was confirmed to be about 11 KV per microsecond. It was found that no increase in output was obtained by injecting for more than 2 microseconds. This was attributed to the fact that the most efficient injection seems to occur at high injection voltages and the peak voltage is limited by sparking of the gun to about 110 KV. Any extension of the injection period beyond 2 microseconds would occur below 88 KV resulting in a negligible increase in output. It is hoped that injector design can be improved to increase the sparking voltage.

One of the 7-1/2 ton steering magnets was installed in the x-ray beam for an experiment intended to sort out mesons according to energy. It was found that

the stray field produced by the magnet prevented operation of the synchrotron until a magnetic shield of 1-inch steel plate was placed around the steering magnet. This shield reduced the stray field at about two feet from the edge of the steering magnet gap from 20 gauss to 3 gauss, permitting synchrotron operation with a slight recompensation of the field.

Experimental Program.

Additional data have been assembled on the energy and angular spectra and on the excitation curve for mesons produced in carbon by the x-ray beam. Microscopic examination of the plates is in progress and, in addition, an improved experimental setup has been fabricated but not yet placed in operation.

Studies of the transition thicknesses and absorption coefficients of lead and copper have been completed, and similar data for copper and aluminum are being obtained. (γ,n) and (γ,2n) reactions have been produced in Cu and Zn. Studies are being made of the absorption coefficients in Pb and Cu of the radiation producing these reactions. Also identified are the (γ,2p) reaction in Cu; the (γ,2p,n) reaction in Al; the (γ,p,n) reaction in Zn; the (γ,n) reaction in Cu; the (γ,n) reaction in Ta; a (γ,In*) reaction in In; and an unidentified reaction in Ta.

A cloud chamber study of the energy spectrum has been made by measuring the curvature of pairs produced by the x-ray beam in a thin lead target.

Experiments are in progress on detecting neutrons produced in various targets bombarded by the x-ray beam and on Compton scattering effects.

4. Linear Accelerator and Van de Graaff Machines

L. Alvarez

The Linear Accelerator operated with a high degree of reliability during the three months covered by this report. Bombardments were on a 16 hour per day basis. The standard average proton beam at 32 Mev was about 0.1 microamperes but by increasing the petition rate, currents as high as 1/4 microampere average were obtained.

5. Bevatron Development

W. M. Brobeck

Operation of the quarter scale model during the period has proved the performance to agree closely with the predictions of theory. Accordingly the maximum aperture to be used in the initial operation of the full scale machine has been reduced from 4 x 14 ft. to 2 by 6 ft. with a corresponding increase in energy from 1-1/2 to about 3 Bev. However, it is not felt advisable to start operation with the minimum aperture of 1 by 4 ft. which is expected to be used eventually.

The first shipment of steel for the magnet has been received and is partially fabricated. This is a sample quantity of about 1 percent of the total. Delivery of the remainder is scheduled to start in October at the rate of about 20 percent per month.

It has been decided to use a linear accelerator injector in place of the cyclotron as a result of the good performance of the 32 Mev machine here. The injector will have an energy of 10 Mev and will use a 500 Kev accelerator for the initial stage. Development tests of this system are proceeding.

The building contract has been awarded for completion in eight months. The site is to be ready by September 1 which would make the scheduled completion date for the building May 1, 1950.