UCRL 454
Cy. 2

UNIVERSITY OF CALIFORNIA

Radiation Laboratory

TWO-WEEK LOAN COPY

This is a Library Circulating Copy which may be borrowed for two weeks. For a personal retention copy, call Tech. Info. Division, Ext. 5545

BERKELEY, CALIFORNIA

DISCLAIMER

This document was prepared as an account of work sponsored by the United States Government. While this document is believed to contain correct information, neither the United States Government nor any agency thereof, nor the Regents of the University of California, nor any of their employees, makes any warranty, express or implied, or assumes any legal responsibility for the accuracy, completeness, or usefulness of any information, apparatus, product, or process disclosed, or represents that its use would not infringe privately owned rights. Reference herein to any specific commercial product, process, or service by its trade name, trademark, manufacturer, or otherwise, does not necessarily constitute or imply its endorsement, recommendation, or favoring by the United States Government or any agency thereof, or the Regents of the University of California. The views and opinions of authors expressed herein do not necessarily state or reflect those of the United States Government or any agency thereof or the Regents of the University of California.

UNIVERSITY OF CALIFORNIA
Radiation Laboratory

Cover Sheet
Do not remove

INDEX NO. UCRL-454
This document contains ____ pages
This is copy 2 of ____ Series ____

Issued to INFORMATION DIVISION
RADIATION LABORATORY
UNIVERSITY OF CALIFORNIA
BERKELEY, CALIFORNIA

~~UNCLASSIFIED~~
Classification

Each person who receives this document must sign the cover sheet in the space below

Route to	Noted by	Date	Route to	Noted by	Date

Copy 2
KK-27
Job No. 77-1
8-16-49
29 Pages
1 Title Page
2 Index Pages
UCRL 454

PROCEDURES IN MAGNETIC MEASUREMENTS

AT THE

UNIVERSITY OF CALIFORNIA RADIATION LABORATORY, BERKELEY

Fields which are constant or vary slowly with time.

date ?

Robert E. Richardson

UNCLASSIFIED

TABLE OF CONTENTS

Page

I. Measurements Using a Fluxmeter 1

A. INTRODUCTION 1

1. FLUXMETER 1
2. DECADE RESISTORS 1
3. EMF BOX 1
4. FLUX STANDARD 2
5. JUNCTION BOX 2
6. MEASURED CIRCUITS 2

B. CALCULATIONS 3

1. BASIC FLUX FORMULA 3
2. MAGNETIZATION 3
3. UNIFORMITY MEASUREMENT 3
4. FLUX STANDARD CALIBRATION 4

C. PROCEDURES 5

1. GENERAL 5
2. MAGNETIZATION 5
3. UNIFORMITY MEASUREMENT 6
4. FLUX STANDARD CALIBRATION 7

II. Measurements Using a Galvanometer or Ballistic Galvanometer 8

A. INTRODUCTION 8
1. GALVANOMETER 8
2. CIRCUIT COMPONENTS 8

B. PROCEDURES 8

C. CALCULATIONS 9

1. COIL CALIBRATION 9
2. STANDARD COILS 10
3. COIL RECORD 10

III. The Bank of Storage Batteries 10

1. USE OF THE BATTERIES 10
2. CARE OF THE BATTERIES 11

References 12

Illustrations 13

Figure 1. Block diagram of the circuit used in flux measurements 13
Figure 2. "Measured circuits" 14
Figure 3. Fluxmeter Control Circuit 15
Figure 4. Junction box 16

Page

Illustrations

Figure 5. Circuit diagram of portable flux standard.....17
Figure 6. Circuit for control box for type "R" galvanometer.....18
Figure 7. Block diagram of the circuit used in flux measurements19
Figure 8. Photograph of stationary flux standard.....20
Figure 9. Setup for photographing fluxmeter readings.....21
Figure10. Setup for uniformity measurement.....22
Figure11. Coil moving mechanism.....23
Figure12. Control for coil moving mechanism.....24
Figure13. Coil-rotating mechanism for coil calibration.....25

Sample Data Sheets.....26

1. MAGNETIZATION.....26
2. UNIFORMITY.....27
3. SEARCH COIL CALIBRATION.....28
4. COIL AREA RECORD.....29

KK-27
Job No. 77-1
8-16-49
29 Pages

PROCEDURES IN MAGNETIC MEASUREMENTS AT THE U.C. RADIATION LABORATORY

R. E. Richardson

Fields Which Are Constant or Vary Slowly With Time

I. Measurements Using a Fluxmeter

A. INTRODUCTION

1. FLUXMETER

The instrument used in these measurements is the General Electric light-beam type fluxmeter, Catalog No. 32C247G6. For description and theory of operation of this meter, references 1, 2 and 3 listed at the end of this article should be consulted. The circuit used is shown in block form in Figure 1 and in Figure 7. The circuit components are discussed individually in the following pages.

For protection of the fluxmeter movement the armature should be kept short-circuited when the meter is not in use, especially when the meter is to be moved. Each fluxmeter which is normally used at this Laboratory is provided with a double-pole, double-throw switch which controls the light source, and automatically short-circuits the fluxmeter movement when the switch is in the "Off" position. Fluxmeters not so equipped should be short-circuited with a clip lead at the junction box or with a shorting plug in the fluxmeter lead.

2. DECADE RESISTORS

The decade resistors, R_1 and R_2, are non-inductive resistors. Their purpose is to act as a voltage-dividing network so that the sensitivity of the measuring circuit may be adjusted to match the voltage induced in the measured circuit. Such a network is allowable since the fluxmeter itself draws negligible current. It has been found empirically that the drift rate of the fluxmeter is more stable when R_1, which is a direct shunt across the fluxmeter and EMF box, is kept greater than three hundred ohms. For maximum sensitivity of the fluxmeter, R_1 is made infinite. Then R_2 should be made small. This is because the maximum recommended external circuit resistance for the fluxmeter is 1900 ohms. The effect of increased resistance in the circuit is to make the meter sluggish, so that there is a perceptible time lag between receipt of the impulse and cessation of fluxmeter motion.

3. EMF BOX

The EMF box is the fluxmeter control circuit. G.E. provides a control box with the meter, but it has been found that the box used at this Laboratory is more satisfactory both in ease of operation and fineness of control. The circuit and arrangement of the EMF box are shown in Figure 3. The sensitivity control rheostat increases the effect of the other controls when it is turned counterclockwise; i.e., when the resistance is decreased. For maximum life of the flashlight cell used as a voltage source, the sensitivity control should be kept as far clockwise as is feasible during normal operations. The drift control rheostats are for the purpose of balancing out any thermal emf's which may be present in the circuit. In order that the zero-set controls may be symmetrical in their operation, it is advisable that the drift controls be operated as near the center of their ranges as possible. The zero-set controls are for the purpose of setting the hairline to a given point on the scale before a reading is taken.

4. FLUX STANDARD

The flux standard is a device which will give a known flux-linkage change to be used as a calibration. Since the sensitivity of the circuit is changed by adjusting R_1 and R_2, and since the resistance in the circuit may be temperature-dependent, it is imperative that a calibration be made during each run. It is advisable to make calibrations periodically during a series of readings.

At the Radiation Laboratory, two types of flux standards are used, a stationary type and a portable type. The stationary standard (Figure 8) is one in which a flip coil is rotated through a known angle in the gap of a C-shaped permanent magnet having Alnico poles. The coil is secured to a lever which rotates about an axis normal to the field of the magnet. The angle is made reproducible by the use of brass stops secured at the ends of the lever throw. Stops are provided on the standard to give several different throws ranging from 15° to 180° for calibration of circuits of various sensitivities. The angle is measured from the position in which the coil is linking the maximum flux. An advantage of this type of standard is that there are no switching contacts to introduce thermal voltages. Since a long lever must be provided in order that the angle may be reproducible to the desired accuracy, it is difficult to make a portable standard of this type.

The portable flux standards are of a modified "Hibbert-type" in which a permanent magnet is moved with respect to a coil. In the original Hibbert standards a coil was dropped over a magnet. It was found difficult to make a coil which would take the punishment given by repeated dropping and the accompanying sudden stops. At the Radiation Laboratory the modification which has been introduced is to fix the coil and drop the magnet. In order that the magnet will suffer no ill effects due to dropping, it is dropped into an oil cup which stops the magnet at a finite rate instead of with a jar. The oil level should be checked periodically to make certain the magnet does not jar when it is dropped.

There are two coils on each portable standard; a few-turns coil for high sensitivity work and a many-turns coil for low-sensitivity work. The magnet used is a cylindrical bar magnet of Alnico (Cenco 78291-B) five inches in length and three-eighths of an inch in diameter. The drop is five inches, and the coils are arranged so that one is around the center of the magnet at the beginning of the drop and the other is around the center of the magnet at the end of the drop. Each coil has ten taps, to give a wide range of sensitivities. A switching arrangement is built-in which inserts a resistance equal to that of the coil section removed when the sensitivity is changed. A circuit diagram is shown in Figure 5. Each tap exceeds the next smaller one by approximately 25% in line-turns. There is overlapping between the values of the larger taps on the "J" (Junior) coil and the smaller ones on the "S" (Senior) coil. A change of tap will not introduce a change in sensitivity of the fluxmeter circuit, since the resistance is the same for all taps of each coil. The fluxmeter circuit sensitivity will be changed, however, if a change is made from one flux standard coil to the other.

5. JUNCTION BOX

The junction box is shown in Figure 4, together with the circuit diagram used in Figure 1. Leads from the Cannon plugs (X3-13 Chassis Connector, Female) are brought out to a "Jones" terminal strip in order that polarities may be adjusted if necessary. The circuit may be easily changed for special uses since all leads are visible. It is also possible to check the circuit quickly.

6. MEASURED CIRCUITS

Representative circuits which are measured with the fluxmeter are shown in Figure 2

and discussed below. Shielded, two conductor, microphone cable is used for all leads. The shield is connected to pin number one of the connectors. It is sometimes advisable to ground one side of the fluxmeter circuit when working near high voltages, in order to provide personnel protection. When this is done, there should be only one ground connection in the entire circuit. Otherwise ground currents may flow and give faulty readings. The shields should likewise be grounded at only one point, preferably at the same point at which the circuit is grounded. Leads subjected to magnetic fields are of #28, Formvar-coated copper wire, uniformly and tightly twisted and encased in Transflex tubing.

B. CALCULATIONS

1. BASIC FLUX FORMULA

The basic formula used in all fluxmeter measurements is:

(a)
$$\frac{\phi_x}{d_x} = \frac{\phi_s}{d_s}$$

where:

ϕ_s is the strength of the flux standard in maxwell-turns.

d_s is the fluxmeter deflection due to the flux standard.

d_x is the fluxmeter deflection due to the measured circuit.

ϕ_x is the strength of the unknown flux in maxwell-turns.

2. MAGNETIZATION

This is the measurement of the absolute strength of a magnetic field. The flux measured is:

(b)
$$\phi_x = BA(\text{x 2 for } 180^\circ \text{ flip})$$

where:

B is the unknown flux density in gauss

A is the "area" of the coil in turns-cm.^{2}

Solving for B, using the basic flux formula: (a)

(c)
$$B = \left\{\frac{\phi_s}{d_s}\,\frac{1}{A\ (\text{x 2 for } 180^\circ \text{ flip})}\right\} d_x$$

When several measurements are made with the same sensitivity, the bracketed expression is computed and used as a factor in calculation of the fields. A representative data sheet is included in this paper, and called DATA SHEET #1.

3. UNIFORMITY MEASUREMENT

This is the measurement of the change in flux density from point to point in a magnetic field. The flux measured is:

(d) $$\Delta\phi_x = \Delta B\ A$$

where:

ΔB is the change in flux density from a point in the field chosen as the reference point.

A is the "area" of the search coil in turns-cm.^{2}

This may be solved for ΔB, using the basix flux formula, to give:

(e) $$\Delta B = \frac{\phi_s}{d_s}\frac{1}{A}\ d_x$$

It is often desirable to plot the variation of the field in terms of the field at the reference point, which is called 100% field. In a field of cylindrical symmetry, such as a cyclotron field, the field at the axis of symmetry is usually chosen as the 100% field. To convert the calculation to percent, the increment of field, B is divided by B_{ref} and multiplied by 100:

(f) $$\%\text{ change in field} = \frac{\Delta B \times 100}{B} = \left\{\frac{\phi_s}{d_s}\ \frac{100}{A\ B}\right\} d_x$$

As in magnetization, the bracketed expression is usually computed and used as a factor. A representative data sheet is included and called DATA SHEET #2.

4. FLUX STANDARD CALIBRATION

The flux measured to be put in the basic flux formula is the flux in the standard mutual inductance.

(g) $$\phi_x = M\ I \times 10^8\ (\times 2 \text{ for current reversal})$$

where:

M is the standard mutual inductance in henries

I is the current flowing in the standard mutual inductance before the switch is opened

Solving (g) and (a) for ϕ_s, it is found that the strength of the flux standard in maxwell-turns is given by:

(h) $$\phi_s = \frac{MI\ (\times 2 \text{ for current reversal})}{d_x}\ d_s$$

In the actual calibration of a flux standard the usual procedure is to take fluxmeter readings for several values of current in the standard mutual inductance. The current is adjusted so that the deflections due to the mutual inductance bracket the deflection due to the flux standard tap being calibrated. ϕ_x is calculated from equation (g) and plotted against d_x. ϕ_s is then read from the curve at the abscissa corresponding to d_s. A variation which saves time in computations is to plot I against d_x and read off the I which would correspond to d_s. Then ϕ_s may be calculated from equation (g).

C. PROCEDURES

1. GENERAL

If the approximate value of the quantity to be measured is known, the appropriate formula is used "backwards" to determine the proper sensitivity, and the proper flux standard tap, to be used in the measurement. Sensitivity should be such that the maximum value measured gives approximately full-scale deflection. In this way one sensitivity may be used for a range of measured values. If the approximate value is not known, the sensitivity may be adjusted by trial.

Choice of search coil area should be such that the maximum deflection will be within range of the available flux standard. For example, if the available flux standard is 3×10^6 maxwell-turns, one would choose a coil of approximately 1000 turns-cm.^{2} to measure a field of 1500 gauss with a 180° flip.

When the fluxmeter and the measured field are so separated that communication between operators by normal voice is not possible, communication is provided by a two-channel audio amplifier located in the "Gauss-House" with outlets for speaker and microphone in appropriate places. For locations in which no amplifier outlets are provided, sound-powered 'phones may be used.

When proper sensitivity has been chosen, and the proper circuit completed, the fluxmeter drift is adjusted to zero and the set-up is ready for measurement. It is advantageous, in terms of time necessary in interpretation and calculation, to use a cardinal marker at the low-numbered end of the scale as the beginning reading.

2. MAGNETIZATION

a. Permanent Magnet or Stable Electromagnet

A stable electromagnet is one in which the current may be kept constant while the measurement is made. Magnets with current-regulated power supplies fall in this category. Model magnets, without current-regulated supplies, in which there is not excessive heating may also be so classed.

This measurement requires two persons; one to operate the fluxmeter and one to operate the search coil and flux standard. Drift is adjusted and the fluxmeter set to one end of the scale, with the coil linking maximum flux in the unknown field. The coil is rotated through 180° about an axis normal to the direction of the field and the reading of the fluxmeter is noted. The coil is then immediately returned to its original position. If the fluxmeter does not return to its original reading, and if it is known that the fluxmeter is properly compensated, then the drift has not been properly adjusted. Drift should be checked and the measurement should be repeated. In an electromagnet this procedure is repeated at each current at which a determination of field strength is required.

b. Pulsed Magnet

When the cooling requirements are such that it is not possible to operate an electromagnet continuously, the coil is fixed in the gap with its axis parallel to the field and the current is turned on and off for each reading.

Two persons are required. One person reads the fluxmeter and the other operates the current source. After the sensitivity and drift have been set, the magnet current is turned on. When a steady current is reached, the fluxmeter and current are read and the

current is then turned off. The entire sequence should take about ten seconds. If the fluxmeter does not return to its original position when the magnet current switch is opened, the drift should be adjusted and the measurement should be repeated. When a measurement has been made at one value of current, the current source should be set to other values of current which are of interest and the field measured at each current.

This measurement gives only the difference between the field at the current of interest and that at no current (residual field). In order that the true value of field may be determined, it is desirable to take a 180° flip at zero current to measure the residual field.

3. UNIFORMITY MEASUREMENT

Requires three persons. One person operates the fluxmeter, one person operates the search coil, and one person monitors the current. In a current-regulated magnet it is sometimes possible to dispense with the monitoring of the current.

When the field variation which is to be detected is a small percentage of the total field, lack of current regulation will introduce appreciable errors into the results. To correct for this, a bucking coil is introduced into the circuit. This is a coil with an area larger than that of the search coil. It is placed in the gap near the center, with a polarity opposite to the polarity of the search coil. A voltage-dividing network is used to make its effective area equal to that of the search coil. When this is done, variation in the absolute value of the field will give no deflection of the fluxmeter. When a bucking coil is used, the error in ΔB is of the same percentage as the percentage fluctuation in B due to current fluctuation. Without the bucking coil, the error in ΔB would be equal in gauss to the fluctuation of B. It is apparent, from voltage-divider equations, that the effective area of the bucking coil is given by:

$$A_{eff} = \frac{R_A}{R_A + R_B + R_C} A$$

where:

R_A is the shunt resistance

R_B is the series resistance

R_C is the resistance of the bucking coil

A is the area of the bucking coil.

After sensitivity and drift have been adjusted, the fluxmeter is set to one end of the scale. The coil is moved in jumps along the path over which the uniformity plot is desired. It is held stationary at each position long enough for the fluxmeter to be read, then moved quickly to the next position. At the end of the run the coil is returned to the original position, and the error in fluxmeter "zero-return" is recorded. Since it is difficult to set the drift adjustment so exactly that there will be no drift during an extended run, the run is repeated several times, and the results of the several runs are averaged. In order that the proper total deflection from beginning to end of the run may be known, "zips" are taken, in which the coil is moved from the beginning to the end of the run and back rapidly, thus eliminating appreciable effect of drift. The individual runs are corrected for drift by pro-rating the drift along the run before the runs are averaged. The maximum total run time is limited by drift considerations. It should

be such that the drift is not excessive during the run. The spacing of the positions is determined by the detail desired in the uniformity plot. In a large magnet, 1" or 2" jumps are sufficient. In small scale models, 1/4", 1/8", or even 1/16" jumps may be required.

In some models, the heating rate is so great that it is not possible to maintain the current long enough for the meter to be read directly during a run. If an attempt were made to read the meter directly, the search coil resistance would be so changed due to heating that the circuit sensitivity would be changed during the run if the fluxmeter is shunted. Thus, the flux standard reading would not hold for the entire run. To speed up readings in this case, and thus minimize heating, the fluxmeter is photographed with the coil at each position of the run. This is done with a Sept camera using a solenoid tripper (Figure 9). The coil moving mechanism is so constructed that the camera is tripped while the coil is stationary at each position. This is done, on small-scale models, with a rack (Figure 10) having rectangular slots evenly spaced with the spacing desired between positions. The rack is moved in jumps by using a special "pinion" (Figure 11). This is a shaft of diameter equal to the spacing desired. A section is cut out of the shaft, and a pin is inserted, parallel to the axis, at the circumference of the shaft. During one half-turn of this shaft the pin engages a slot in the rack and moves the rack forward one position. During the other half- turn the pin is free of the shaft. At this time a cam attached to one end of the shaft makes contact with a microswitch which energizes the camera-tripping solenoid (Figure 12). Thus the camera is tripped and the picture taken while the coil is stationary in a known position.

4. FLUX STANDARD CALIBRATION

The current flowing in the standard mutual inductance is furnished by a bank of storage batteries kept in a cabinet in the "Gauss-House". For standard calibration the batteries are placed in series by closing the knife switches, in the metal control box on the north wall in the "Gauss-House", to the "Series" position as indicated by stencilling on the switches. The current is then controlled by the wire-wound rheostats mounted on a table next to the battery cabinet. These should be used in order, completely removing the resistance from one rheostat before beginning to vary the setting of the next rheostat having lower resistance windings. As protection for the rheostats, it is very important that the rheostats be removed in order of decreasing resistance so that no one of them will have its current rating exceeded. The current is fed to the standard mutual inductance through a two-conductor cable which leaves the bottom of the metal control box and is coiled beneath the rheostat table.

The current is set to the approximate value desired by referring to an ammeter included in the circuit on the rheostat table. For accurate measurement of the current, a type K-2 L&N Potentiometer is used. Instructions for its use may be found in the instruction book included with it. Instruction books are kept in the equipment log-book with the sheets for the corresponding meters and equipment. The standard shunt for use with the potentiometer is placed in the circuit preceding the shunt for the ammeter.

This measurement requires two persons. One person operates the fluxmeter and the control for the current in the mutual inductance. The other operates the potentiometer. After the sensitivity and drift have been adjusted, the current is turned on and set to an appropriate value. When the potentiometer has been set to a reading corresponding to the exact current, the fluxmeter is read and the current is turned off or reversed, whichever is appropriate as discussed below. The fluxmeter is then read again. Several readings are taken which bracket the deflection produced by the flux standard being calibrated.

The current in the standard mutual inductance should not exceed 0.3 amp. (the rating is 0.1 amp. continuous). When the current required to give sufficient deflection is greater than this, the current is reversed after the first readings are taken. The potentiometer is then quickly balanced after the reversal. The current used in the calculation is the sum of that before reversal and that after reversal. It is important that the current is not switched while the potentiometer buttons are depressed. Damage to the standard cell and the galvanometer may result. It is also extremely important to observe the proper polarities when making connections to the potentiometer.

The switching of the current in this procedure is done by remote-controlled solenoids, which are operated from the small bakelite switching box attached to a multi-conductor, rubber covered cable which also comes from the bottom of the metal control box. The switches marked "Remote Current" and "Remote Reverse" are the ones used in flux standard calibration.

II. Measurements Using a Galvanometer or Ballistic Galvanometer

A. INTRODUCTION

1. GALVANOMETER.

The instrument used is a Leeds and Northrup Type "R" Galvanometer (Catalog No. 2500-F). The control circuit used is shown in Figure 6. This circuit is included in the same box with compensating circuits which were used when the galvanometers were formerly used as fluxmeters. The compensating circuits are not used in measurements for which the galvanometers are now used. The labels on the plugs and switches are also carry-overs from the days when the instruments were used as fluxmeters. At present, the only measurement for which a meter of this sensitivity is used in the magnet group is the determination of the effective "area" of search coils.

The meter is housed in a brass box atop a steel column adjacent to the fluxmeter table. The scale is stored on a shelf above the meter. When measurements are to be made, the scale is mounted in a holder on the model magnet table. This gives a light beam "arm" of approximately two meters. The meter should be kept shorted when measurements are not being made. The armature should also be kept clamped by use of the clamping device provided on the meter.

2. CIRCUIT COMPONENTS

The purpose of the Ayrton shunt is to vary the effective sensitivity of the galvanometer without changing its period or damping characteristics. Since the total circuit resistance is not critical in the measurement of search coil area, the "Resistance" socket is normally kept short-circuited by keeping its switch in the "Out" position. The "Z-standard" socket is used to receive the plug from the stationary coil. One "Input" socket is used to receive the rotating coil, and the other is normally shorted by inserting a shorting plug.

B. PROCEDURES

The coil of unknown area is compared with a standard coil of known area. A coil is considered standard if its area may be calculated with high precision from consideration of the dimensions of the coil. Standard coils are discussed under calculations, below. The method of comparison is as follows:

Both coils are placed in the gap of an electromagnet whose field is uniform to a very high degree over a region extending beyond the positions occupied by the two coils. The coil of smaller area is placed in a stationary holder with its axis parallel to the direction of the flux lines in the gap. The other coil is mounted upon a shaft which is normal to the direction of the field lines. The shaft may be rotated about its longitudinal axis, and carries upon the outer end a protractor with which the angle of rotation may be measured within one second of arc (Figure 13). The axis of the coil is normal to the axis of the shaft. The two coils are connected in series by use of the control box. The reversing switches are adjusted so that the coils are of opposite polarity.

The Ayrton shunt is placed in the circuit to protect the galvanometer during the rough setting of the protactor. The model magnet is connected to the batteries by throwing the upper three double knife switches, in a metal control box on the north side of the "Gauss-House", to the "Parallel" position. Current is then turned on and off by use of the "Model Magnet" switch on the small bakelite control box. This controls a de-ion breaker in the metal control box.

Actual measurement is conducted as follows: The current is turned on and off, the direction of deflection of the galvanometer being noted. The moving coil is then rotated through a small angle and the operation repeated. This is continued until a null deflection is noted. The Ayrton shunt is removed and the balancing completed. When a true balance is obtained, the meter may deflect momentarily when the current is turned on or off, but it will return immediately to its null position. The momentary deflection is due to the fact that the field does not rise at exactly the same rate throughout the magnet until the eddy currents in the pole pieces have been established. The reading of the protractor when a true balance has been obtained is recorded on the data sheet as θ_{Buck}. The stationary coil is then removed from the circuit. Closing of the shorting switch is not sufficient. The plug must actually be removed from the socket because of the finite resistance of the switch. The rotating coil is then turned until it links no flux. The determination of zero flux-linkages is determined by the same null method as above. The reading of the protactor is then known as the zero angle and is recorded as θ_0. The difference between these two angles is known as $\Delta\theta$, and is the angle used in the calculations.

At the time the calibration is made, the resistance is measured on the Type "S" Set. The temperature is also recorded so that the proper resistance at any temperature may be calculated. With this record, an idea as to whether a coil may have been damaged is provided by a measurement of its resistance. A sample data sheet is included with this paper and called Data Sheet #3.

C. CALCULATIONS

1. COIL CALIBRATION

When a coil is inclined with respect to a given direction, its effective area in that direction is given by:

(j) $$A_{eff} = A \sin \theta$$

where:

A is the area of the coil in turns-cm.^{2}

θ is the angle at which the axis of the coil is inclined with respect to the given direction

When the rotating coil is in the balance position, its effective area is equal to the area of the fixed coil. The relationship between the two areas is given by:

(k) $$A_{stat} = A_{rot} \sin \Delta\theta$$

where:

A_{stat} is the area of the stationary coil

A_{rot} is the area of the rotating coil

$\Delta\theta$ is the angle of rotation of the rotating coil, as discussed under "Procedures".

2. STANDARD COILS

The standard coils are single-layer coils wound upon spools of known diameter. The diameter of the spools and the diameter of the wire used are measured very accurately. The turns are laid as close together as possible in order that the vector representing the area will coincide with the axis of the coil. The area of such a standard coil is given by:

(l) $$A = \pi N \left\{ \frac{D^2}{4} + \frac{Dd}{2} + \frac{d^2}{3} \right\}$$

where:

A is the area of the standard coil in turns-cm.^{2}

N is the number of turns

D is the spool diameter in cm.

d is the wire diameter in cm.

This equation is derived in reference 4. That paper is excellently written, and the reader is referred to it for a summary of methods, theories, and expected accuracies in the calibration of search coils.

3. COIL RECORD

A record of search coil areas and calibrations is kept in the "Gauss-House". A record of each coil is kept on a separate sheet in the coil record book. A complete history of each coil is kept, including each calibration. A copy of the coil record sheet is included, and called Data Sheet #4.

III. THE BANK OF STORAGE BATTERIES

1. USE OF THE BATTERIES

A bank of twelve, six volt storage (automobile) batteries is kept in a cupboard in the northwest corner of the Gauss-House. The cupboard is vented to the outside to provide air circulation for cooling without introducing sulfuric acid fumes into the building. In the center of the north wall is a steel control box which houses de-ion breakers, circuit-selecting knife switches, and fuses. The fuses are 40 ampere fuses. The batteries are arranged in three groups of four batteries each. The leads from each group are carried into the metal control box where each set terminates on the blades of a double-pole, double-

throw knife switch. With these switches the groups may be placed either in series or in parallel. For coil calibration the switches are put to the parallel position to give an output voltage of 24 volts at the terminals in the center of the Gauss-House ceiling, from which leads go to the model magnet. The current may be varied by use of knife switches and fixed resistors mounted on the north wall next to the battery cupboard. For flux standard calibration the groups are placed in series and the switch at the lower right in the metal control box is thrown to the "Series" position. The current is then controlled by the rheostat bank on the table between the battery cupboard and the metal control box. Current is taken from the leads coming from the bottom of the metal control box.

2. CARE OF THE BATTERIES

The Electronics Maintenance department is charged with care of the batteries. However, it is the duty of the magnet group to maintain the charge of the batteries when they are used frequently. The specific gravity should be checked occasionally with a hydrometer. When it drops below 1.200, the batteries should be placed on charge until the specific gravity reaches 1.250 or 1.275. To place them on charge, put the groups in series and throw the switch in the lower right corner of the metal control box to "Charge". The rectifier is located atop the battery cabinet. Make sure that its plug is firmly in the socket and that both knobs are turned counterclockwise until they hit stops. Now turn on the "Battery Charger" breaker on the circuit-breaker panel next to the Gauss House door. To protect the Tungar rectifier tube, this switch should never be turned on or off unless the rectifier is turned off with the knobs on its front. While charging, it is a good practice to place "Do not turn off" notices on the "Battery Charger" breaker and the Main Breaker. To start charging current, turn the knobs on the rectifier to the right until the tube begins to glow. Then adjust the current to between four and six amperes. The current may be left on overnight if the condition of the batteries requires it. Avoid overcharging the batteries. If corrosion of the leads becomes apparent, or if the batteries need water, notify Electronics Maintenance.

References

1. Instructions, Light-Beam Type Fluxmeter; GEI-18411A

2. Memorandum on Fluxmeter Theory; General Electric FN-412

3. Wilson M. Powell, The General Electric Fluxmeter, Index No. BP-28

4. J. DePangher, Hammond, Seegmiller, Areas of Search Coils, Index No. Magnet Special 11

R.L.-27.6.11

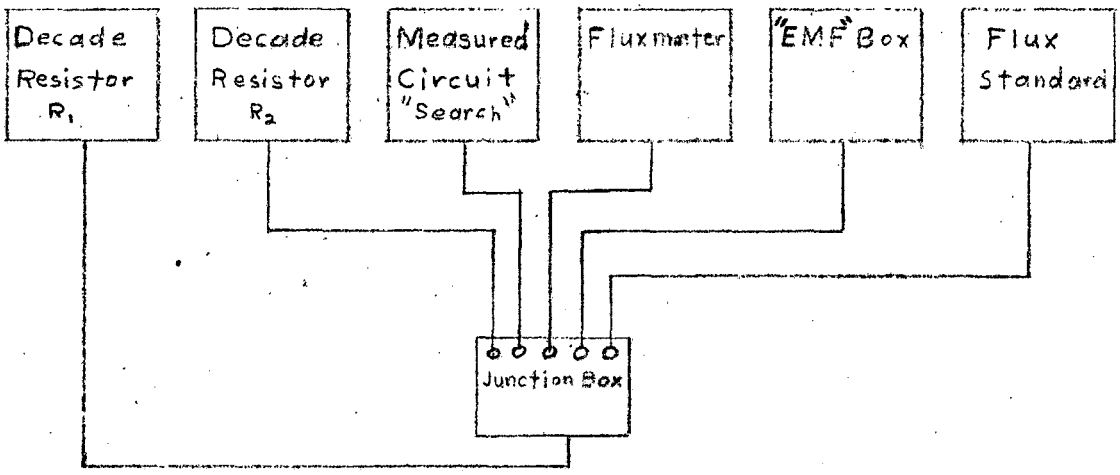

Block Diagram of the Circuit Used in

Flux Measurements

Figure 1.

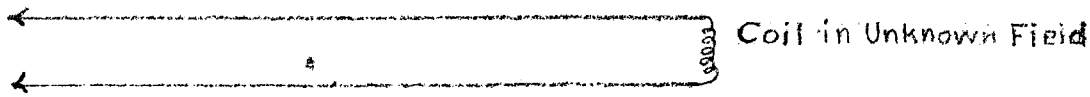

Magnetization

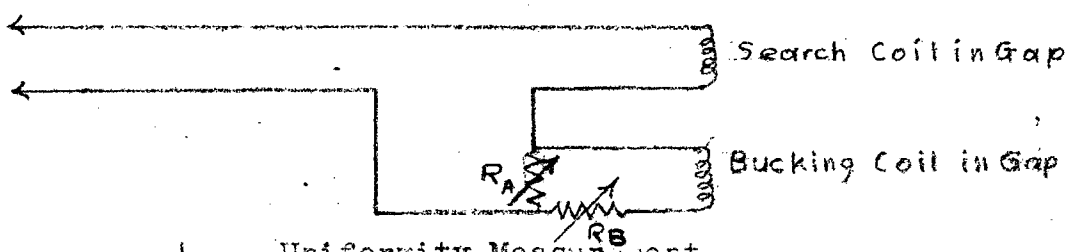

Uniformity Measurement

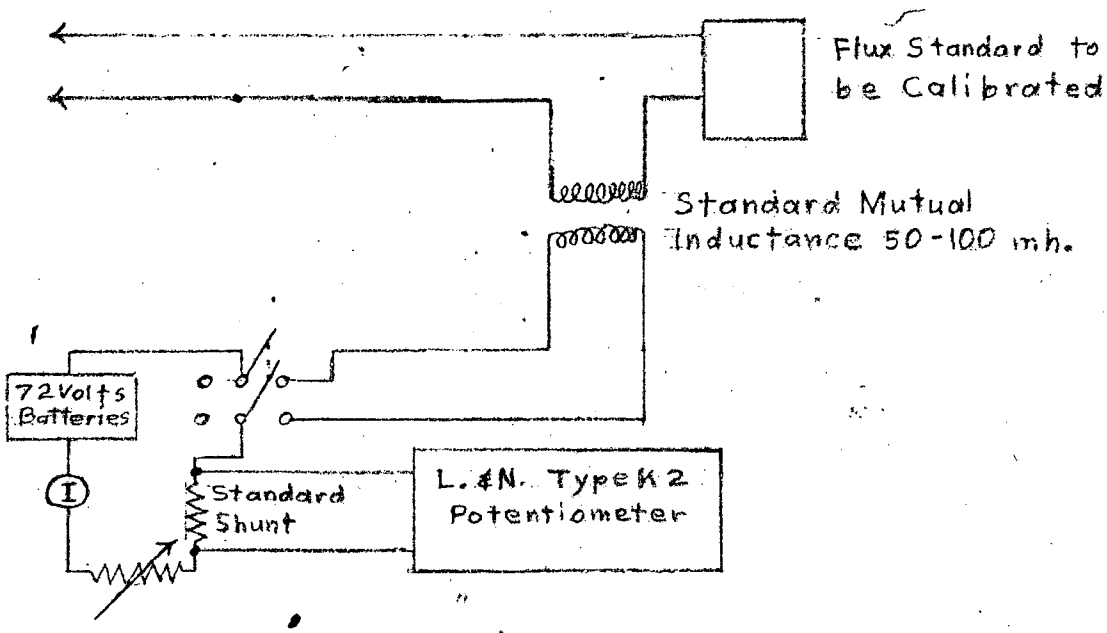

Flux Standard Calibration

"Measured Circuits"

Circuits used in conjunction with the block diagram shown in Figure 1.

Figure 2.

Fluxmeter Control Circuit

(EMF BOX)

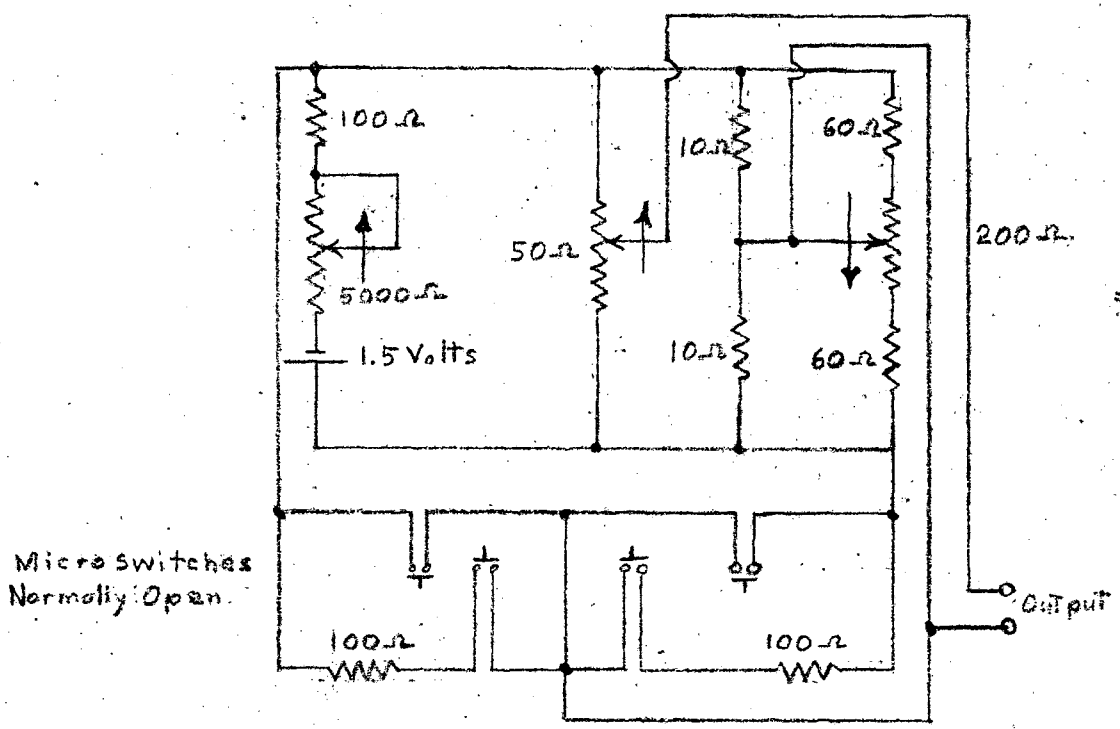

Circuit Diagram

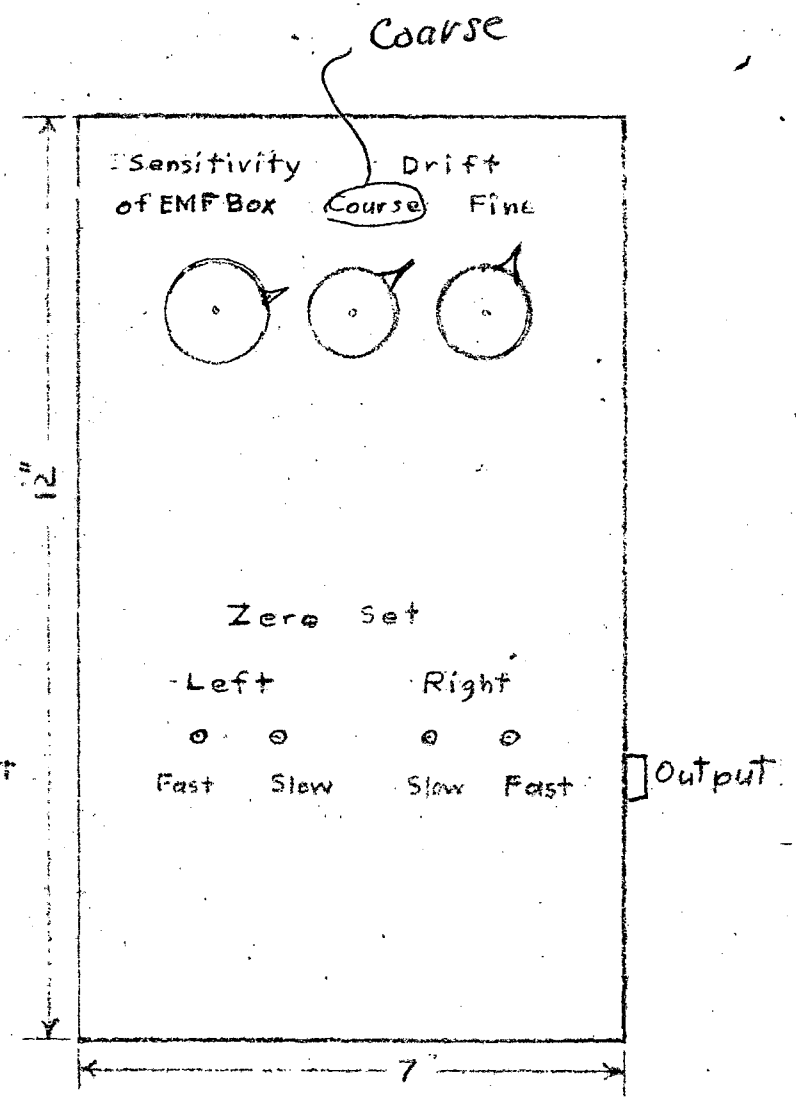

Top View

Figure 3.

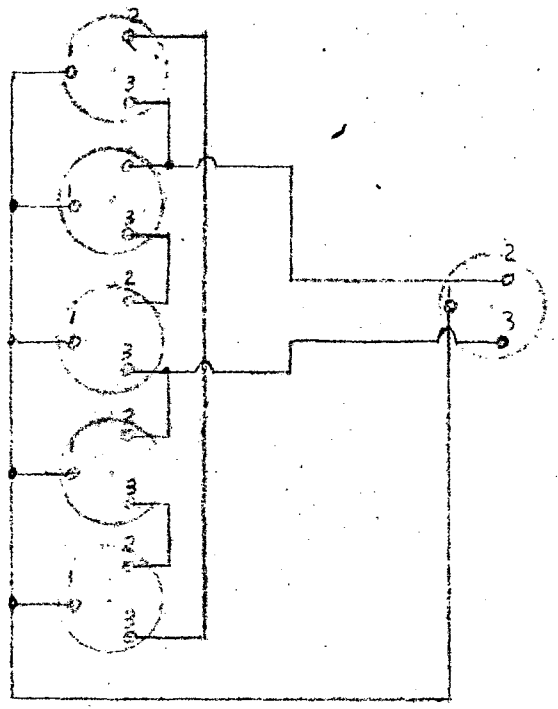

Normal Circuit Diagram

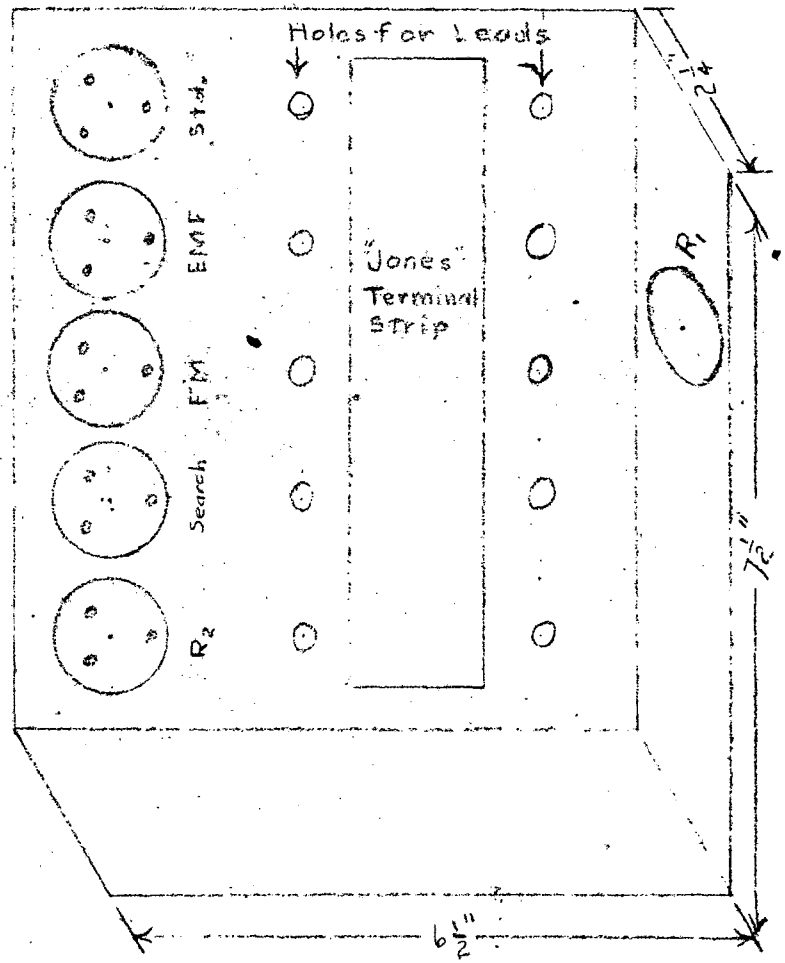

"Picture" of Box

Junction Box

For use in conjunction with the block diagram shown in Figure 1.

Figure 4.

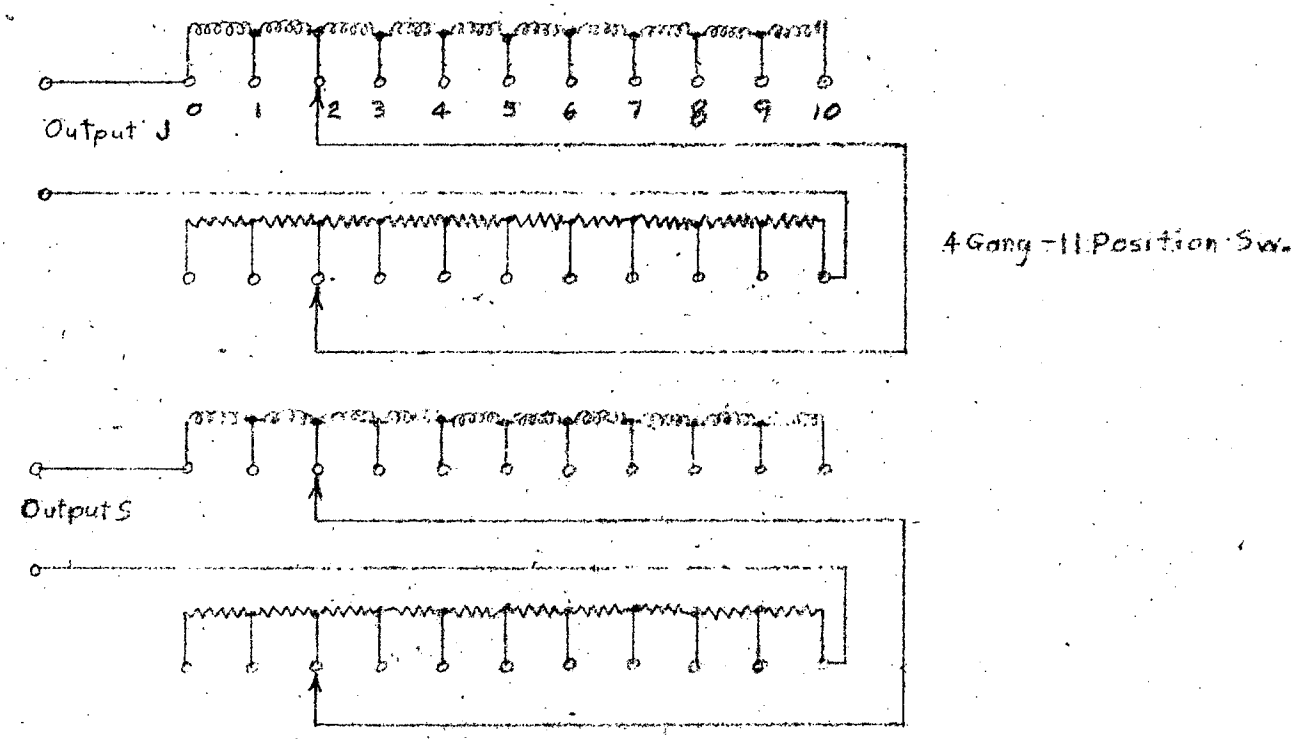

Circuit Diagram of "Hibbert-type"
Portable Flux Standard

Figure 5.

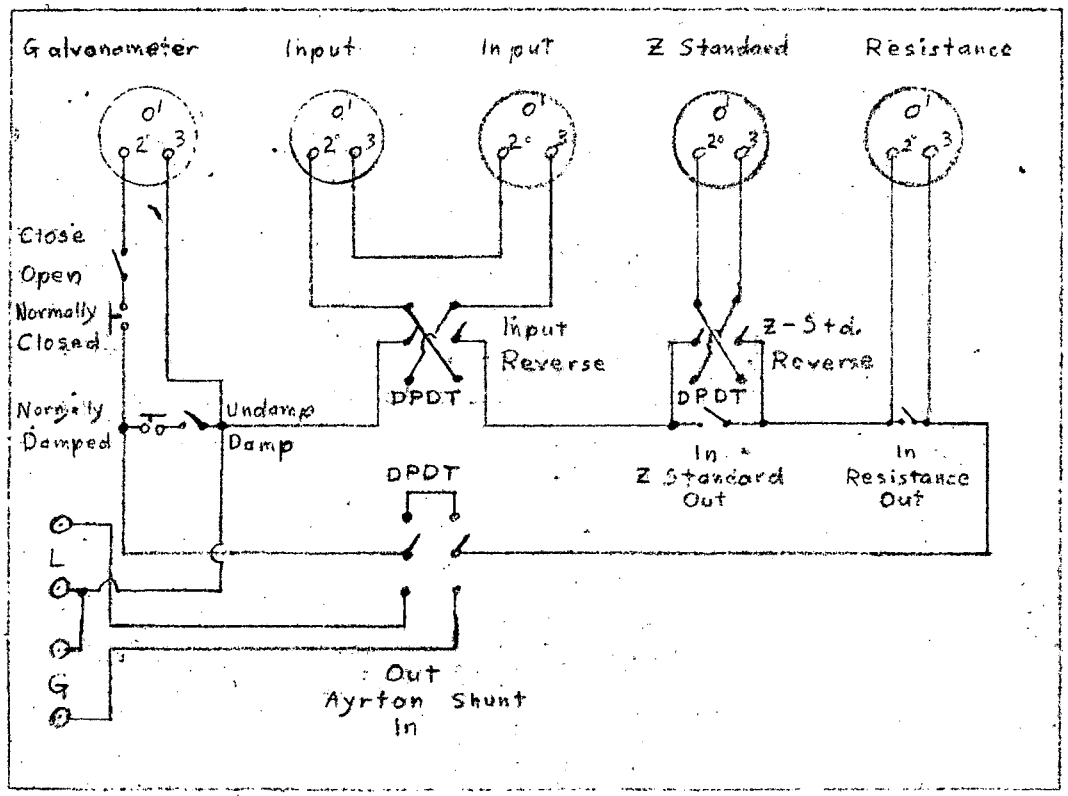

Circuit for the Control Box Used

with Type "R" Galvanometer

Figure 6.

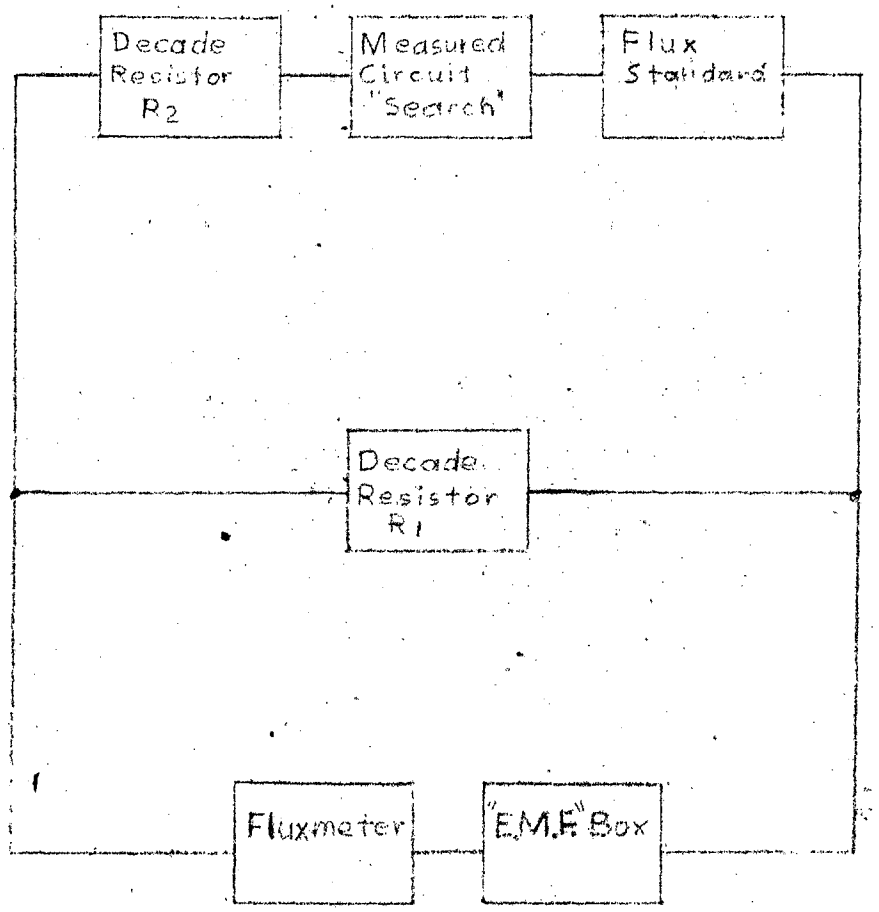

Block Diagram of the Circuit Used in Flux Measurements

Figure 7.

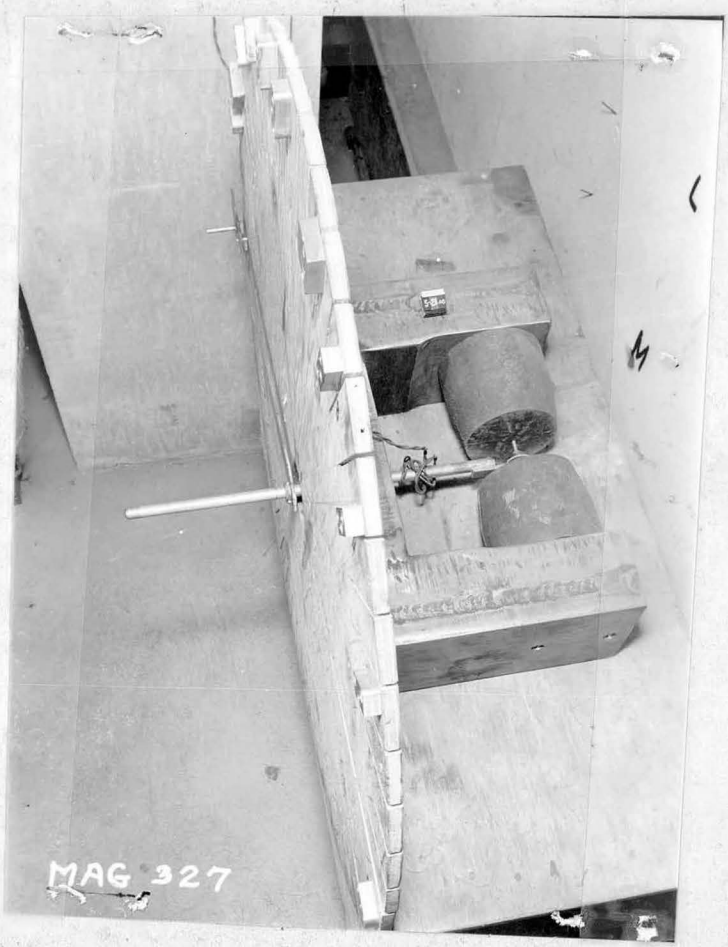

Figure 8

Stationary Flux Standard

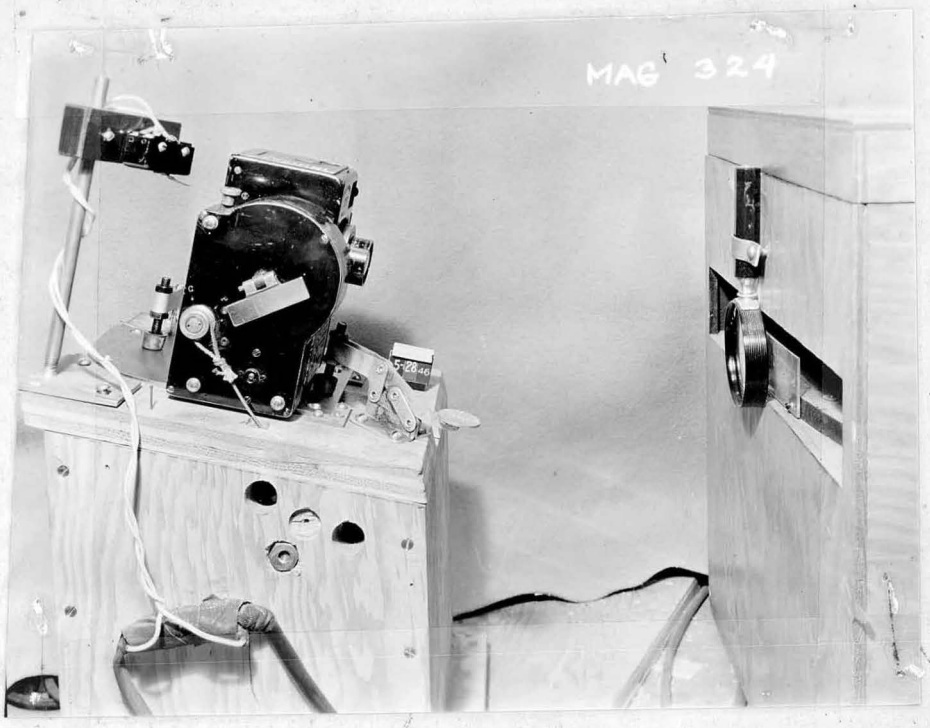

Figure 9

Set-up for photographing fluxmeter readings. The connection to the solenoid tripper is through the string coming out of the box next to the Sept camera. The micro-switch is for testing the tripping mechanism. The lense on the fluxmeter case is for the purpose of collecting the light beam and sending the light to the camera lens. To minimize vibration due to the solenoid, there is included in the tripping string a spring which smooths out the pull.

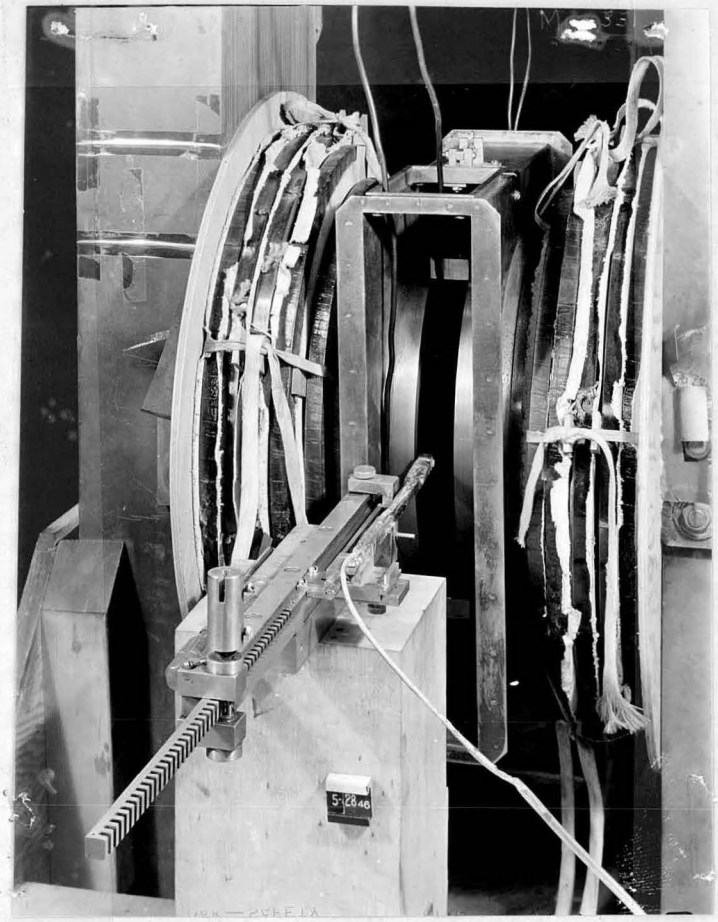

Figure 10

Set-up for uniformity measurement in the gap of a model magnet. The search coil is seen mounted on the special rack described in paragraph I C 3.

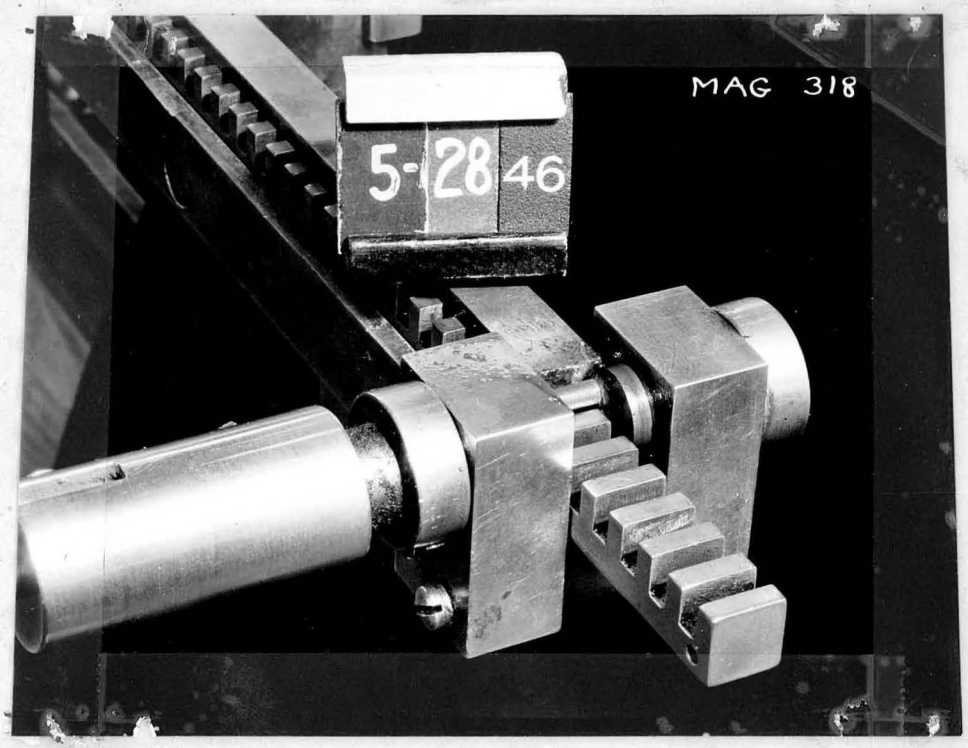

Figure 11

Close-up of the coil-moving mechanism for field uniformity measurement.

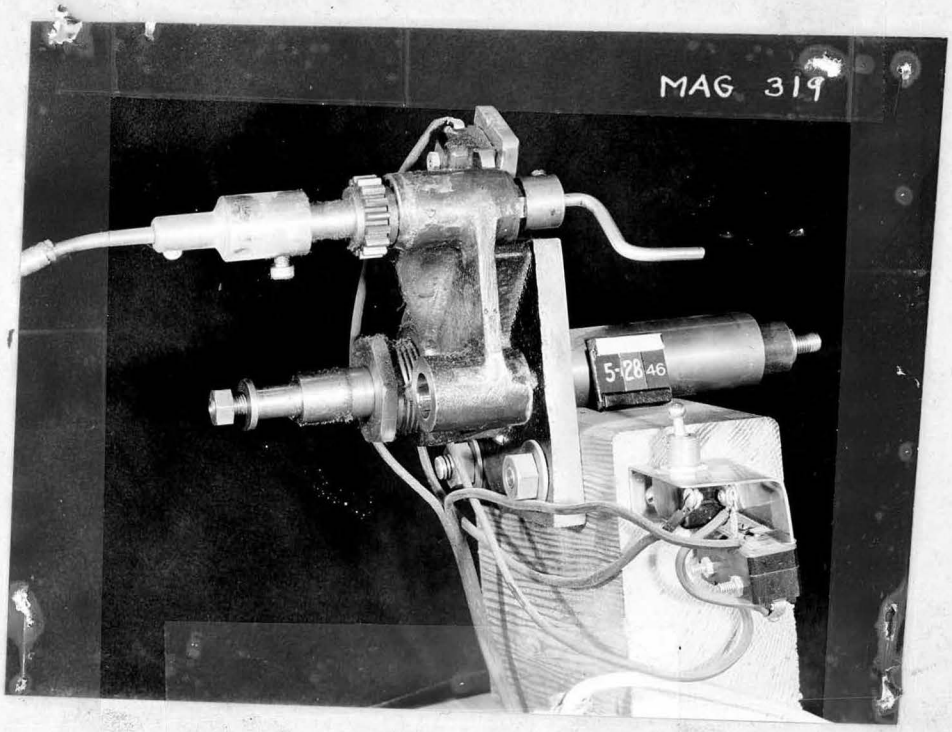

Figure 12

Control for coil-moving mechanism. The midro-switch at the top is tripped by a cam on the handle when the coil is stationary. The switches in the foreground are for the purposes of turning the cam-operated switch on and off and for manual tripping of the camera solenoid.

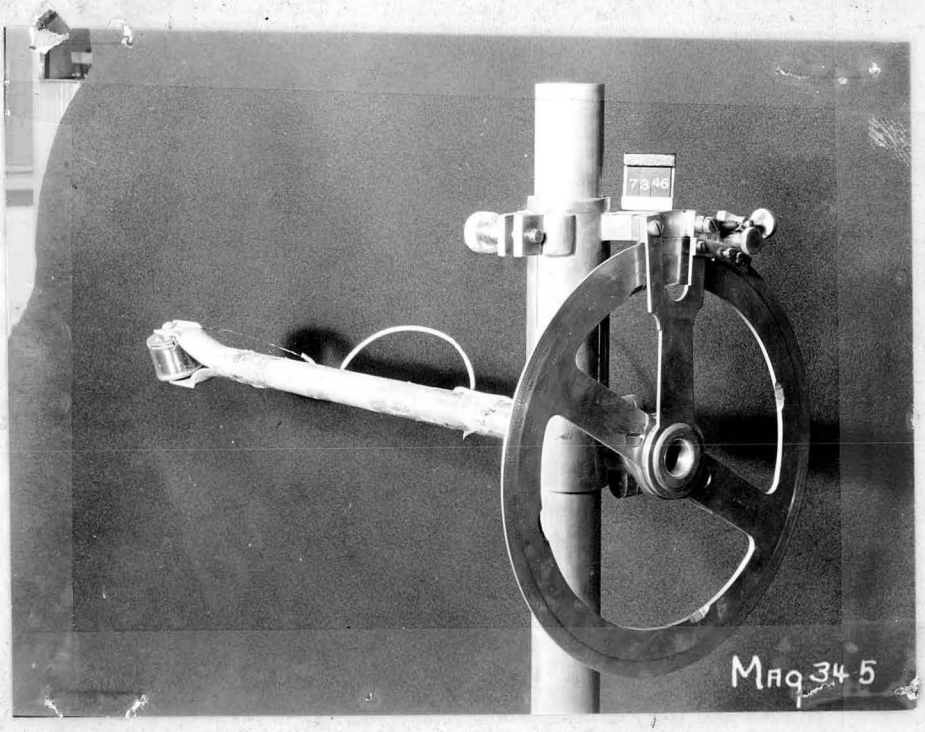

Figure 13

Coil-rotating mechanism for coil calibration.
A standard coil is seen mounted on the mechanism.

MAGNETIZATION

Date _____ Job No. _____

_____ Magnet Code No. _____

Coil
No. _____ Measurement by _____
Area _____

Std. No. _____ Std. Lines _____ Std. Defl. _____

$$H/cm = \frac{\text{Std. Lines}}{\text{Area x Std. Defl. (x 2 for flip)}} = _____ = \text{gauss/cm}$$

Pos.	Amps.	Read.	Read.	Defl.	H	Pos.	Amps.	Read.	Read.	Defl.	H

OTHER CONDITIONS

Tank _____ Gap at Center _____

Shim _____ Miscellaneous _____

Coils _____ _____

Date _____

Job No. _____

Code No. _____

_____ Magnet

Measurement by _____

_____

_____

Magnet Current _____ H at Center _____

Search Coil No. _____ Search Coil Area _____ cms.

SFK No. _____ SFK Lines _____ SFK Defl.

$$\%/\text{cm} = \frac{\text{SFK} \times 100}{\text{H} \times \text{A} \times \text{SFK Defl.}} = _____ = _____ \%/\text{cm}$$

% Added _____

POS.	READ.	DEFL.	CORR. DEFL.	READ.	DEFL.	CORR. DEFL.	READ.	DEFL.	CORR. DEFL.	AVE. DEFL.	%	TOTAL %

OTHER CONDITIONS

Tank _____ Gep at Center _____

Shim _____

Coils _____ Misc. _____

SEARCH COIL CALIBRATION

Date	Coil No.		Angle			Known Area		Measured Area		Resistance		By
	Rotating	Fixed	θ_{Buck}	θ_o	$\Delta\theta$	Rotating	Fixed	Rotating	Fixed	Value	Temp.	

COIL AREA

Record of Calibration Checks

Coil_____

Calibrated Against	By	Date	Area	Resistance	Temp.	Remarks