UCRL 545
~~Cy. 85~~ A
c.2

UNIVERSITY OF CALIFORNIA

Radiation Laboratory

file
~~TWO WEEK~~ LOAN COPY

This is a Library Circulating Copy
which may be borrowed for two weeks.
For a personal retention copy, call
Tech. Info. Division, Ext. 5545

BERKELEY, CALIFORNIA

UCRL-545
c.2

DISCLAIMER

This document was prepared as an account of work sponsored by the United States Government. While this document is believed to contain correct information, neither the United States Government nor any agency thereof, nor the Regents of the University of California, nor any of their employees, makes any warranty, express or implied, or assumes any legal responsibility for the accuracy, completeness, or usefulness of any information, apparatus, product, or process disclosed, or represents that its use would not infringe privately owned rights. Reference herein to any specific commercial product, process, or service by its trade name, trademark, manufacturer, or otherwise, does not necessarily constitute or imply its endorsement, recommendation, or favoring by the United States Government or any agency thereof, or the Regents of the University of California. The views and opinions of authors expressed herein do not necessarily state or reflect those of the United States Government or any agency thereof or the Regents of the University of California.

UNIVERSITY OF CALIFORNIA
Radiation Laboratory

Cover Sheet
Do not remove

INDEX NO. UCRL 5345
This document contains 9 pages
This is copy 85 of 94 Series A

UNCLASSIFIED

Issued to Safe. Div.

~~RESTRICTED~~
Classification

Each person who receives this document must sign the cover sheet in the space below

Route to	Noted by	Date	Route to	Noted by	Date
	JST	1/14/50			

UNCLASSIFIED

UCRL 545
Physics-General

RESTRICTED

UNIVERSITY OF CALIFORNIA

Radiation Laboratory

Contract No. W-7405-eng-48

DOWNGRADE TO [redacted] OR UNCLASSIFIED
ON 1-4-53 BY RK Walker (BZ)
(SIGNATURE OF ORIGINATOR OR CLASSIFYING AUTHORITY)

SUMMARY OF THE RESEARCH PROGRESS MEETING

of November 17, 1949

H. P. Kramer

December 12, 1949

Berkeley, California

RESTRICTED

INSTALLATION	Copy Numbers
Argonne National Laboratory	1-12
Armed Forces Special Weapons Project	13
Atomic Energy Commission, Washington	14-15
Battelle Memorial Institute	16
Brookhaven National Laboratory	17-20
Bureau of Ships	21
Carbide & Carbon Chemicals Corp. (K-25 Plant)	22-25
Carbide & Carbon Chemicals Corp. (Y-12 Plant)	26-29
Columbia University (Dunning)	30
General Electric Company, Richland	31-34
Hanford Operations Office	35
Idaho Operations Office	36-37
Iowa State College	38
Knolls Atomic Power Laboratory	39-42
Los Alamos	43-45
Mallinckrodt Chemical Works	46
Mound Laboratory	47-49
National Advisory Committee for Aeronautics	50
National Bureau of Standards	51
Naval Radiological Defense Laboratory	52
NEPA Project	53
New Brunswick Laboratory	54
New York Operations Office	55-56
North American Aviation, Inc.	57
Oak Ridge National Laboratory	58-65
Patent Branch, Washington	66
Sandia Laboratory	67
Technical Information Branch, ORE	68-82
UCLA Medical Research Laboratory (Warren)	83
University of California Radiation Laboratory	84-88
University of Rochester	89-90
Westinghouse Electric Corporation	91-94

INFORMATION DIVISION
Radiation Laboratory
Univ. of California
Berkeley, California

RESTRICTED

SUMMARY OF THE RESEARCH PROGRESS MEETING OF November 17, 1949

H. P. Kramer

December 12, 1949

Meson Induced Fission. S. Al-Salam.

When photographic plates are exposed to π^- mesons produced in the cyclotron, about 75 percent of the tracks terminate in a characteristic star consisting of one or more prongs. Such stars have been interpreted as depicting the capture of π^- mesons by nuclei and the subsequent emission of one or more charged particles from the excited nuclei. It is believed, that all π^- mesons incident on the emulsion are in fact captured and that in the cases where the meson track does not terminate in a star, non-ionizing neutrons are emitted. Hence, since nuclear reactions initiated by π^- meson capture are observable by means of photographic plates, it was thought possible that one might detect π^- meson induced fission of uranium by the same means.

Nuclear emulsions were soaked in a saturated solution of uranyl acetate containing .02 gm of uranium per cc. The uranium content of the dried emulsions was determined by a count of the α-particle tracks from uranium to be .05 gm per cc of emulsion. This density corresponds to 1 atom of uranium for each random group of 600 atoms in the emulsion.

Preliminary experiments were performed by exposing the plates to neutrons in order to gain experience in recognizing fission in emulsions. However, since α-particles from uranium have practically the same range ($\sim$20 microns) as fission fragments (a total for both fragments of $\sim$25 microns), it was difficult to distinguish fission events from α-particle tracks. A meson-induced fission is more easily differentiated since the characteristic meson track is visible.

The method of exposure was relatively simple (Fig. 1). Mesons were produced

by the bombardment of carbon with cyclotron accelerated protons. π^- mesons were directed in semicircular orbits onto a copper-shielded stack of uranium impregnated NTB plates.

The calculated frequency of the initiation of fission by π^- mesons that stop in the emulsion is 0.01. Among 550 meson tracks examined, 5 were found that terminated in a two-prong uranium fission star. H. Bradner has observed 3 such events. Figs. 2 and 3 show three compositers of meson-induced uranium fission tracks. Note that in one of the tracks of Fig. 2 in addition to the fission fragments, an α-particle is ejected at right angles to the fragments.

Selection Rules and Correlations in Emission of Two Quanta. G. C. Wick.

A selection rule applying to all processes in which a system decays into two quanta was first discovered by Landau in 1948 but owing to the present difficulties of communication it remained unknown here. It was thus rediscovered by Wigner and discussed more or less independently by Yang and Wick.

The selection rule is analogous to that which applies to the determination of the possible values of the angular momentum of two alpha-particles emitted in the decay of a Be^8 nucleus. It has been shown that in this case the two particles can have relative angular momenta of (0, 2, 4, . . .) with plus parity.

Since photons, like alpha particles, obey Bosé statistics one can suspect the existence of an analogous rule for quanta. However, considerable differences arise out of the two facts that quanta have zero rest mass and have a spin. The selection rule is set forth in the table below:

System of Two Quanta with Opposite Linear Momenta

Angular Momentum		0	1	2	3	4	5
Number of independent states with parity	+	1	0	2	1	2	1
	-	1	0	1	0	1	0

In the decay of a neutral meson, two quanta are emitted with opposite angular momenta. The scalar theory predicts decay into two photons in the 0 state with positive parity and the pseudo scalar theory predicts decay into two photons in the 0 state with negative parity. These two states can be distinguished because they result in different polarization for the emitted quanta.

An experiment which would determine whether or not two quanta are emitted and, if two quanta are emitted, what their polarization is and would thus decide between the vector theories (the two vector theories predict the emission of three quanta) and the two scalar theories, is one constructed similar to the experiment by means of which Bleuler and Bradt* were able to verify that the planes of polarization of two quanta emitted in electron-positron annihilation are perpendicular. The apparatus for this case is shown in Fig. 4. In the neutral meson case a suitable material would be subjected to bombardment by nucleons to produce neutral mesons. If these decay into pairs of quanta, the quanta would be detected by means of scatterers and counters connected in coincidence. By rotating the counters about the axis determined by source and materializers and noting coincidences for different angular separations of the axes of the counters, the relative polarization could be determined and the decision between the scalar and the pseudo scaler meson theories made. The apparatus of Fig. 4 would have to be modified quite considerably and other methods of detection of the quanta (such as pair creation) might have to be used instead of the Compton electrons.

---

*E. Bleuler and H. L. Bradt, "Correlation Between States of Polarization of the Two Quanta of Annihilation Radiation". Phys. Rev. 73, 1398 (1948).

LMB/12-12-49
Information Division

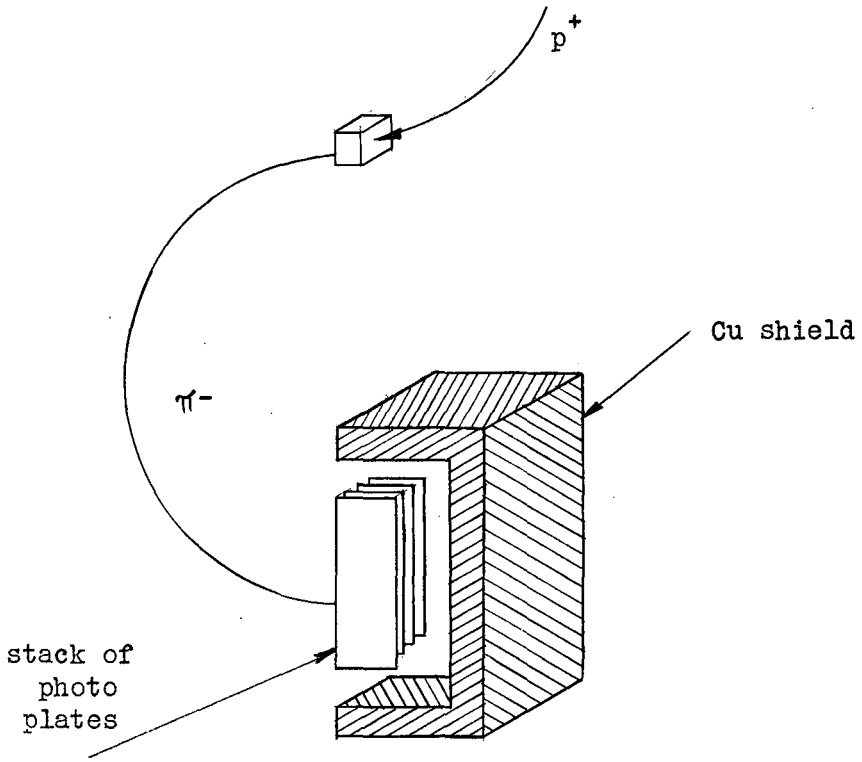

Fig. 1

Method for exposing photographic plates to detect meson induced fission.

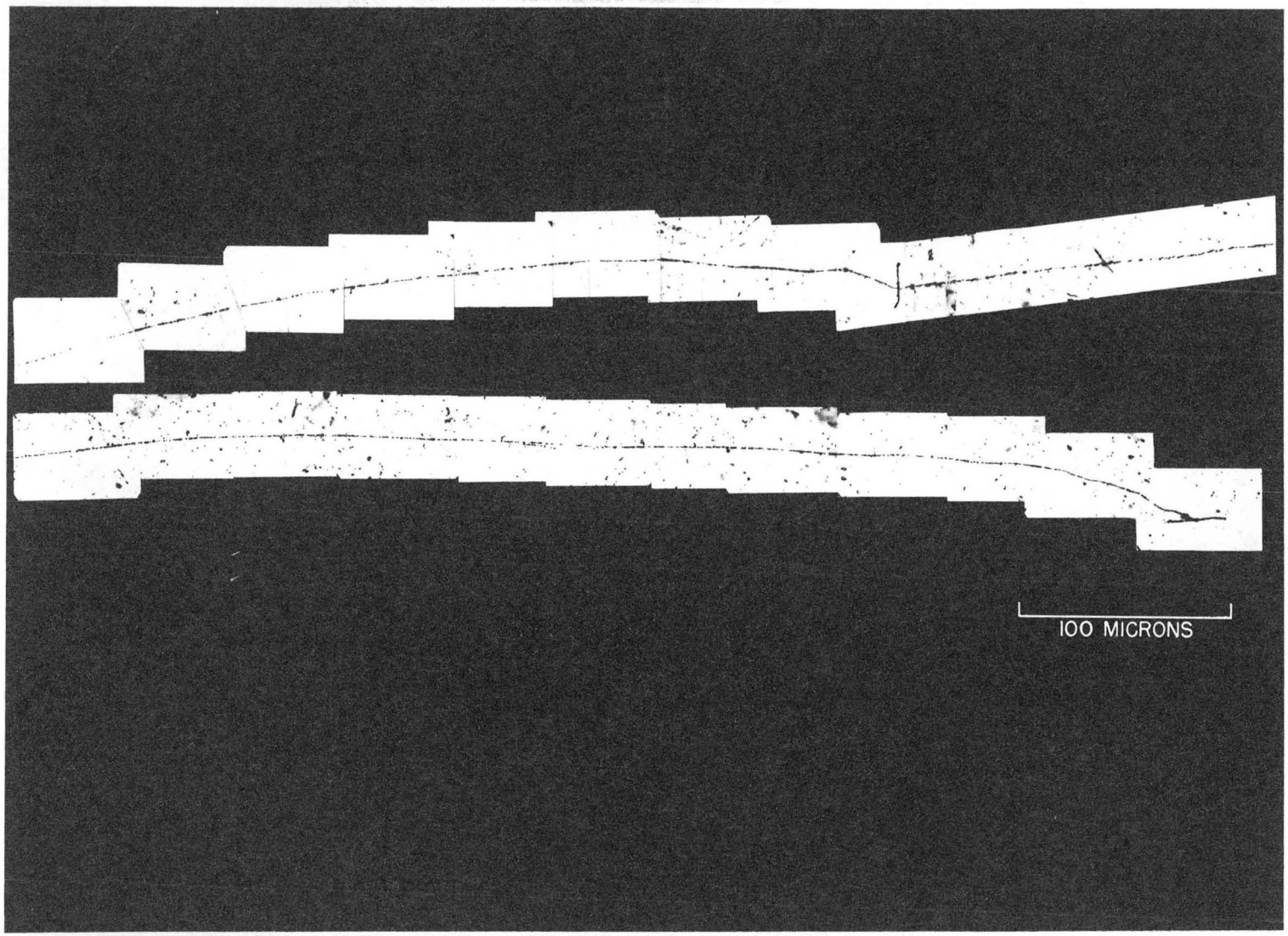

FIG. 2

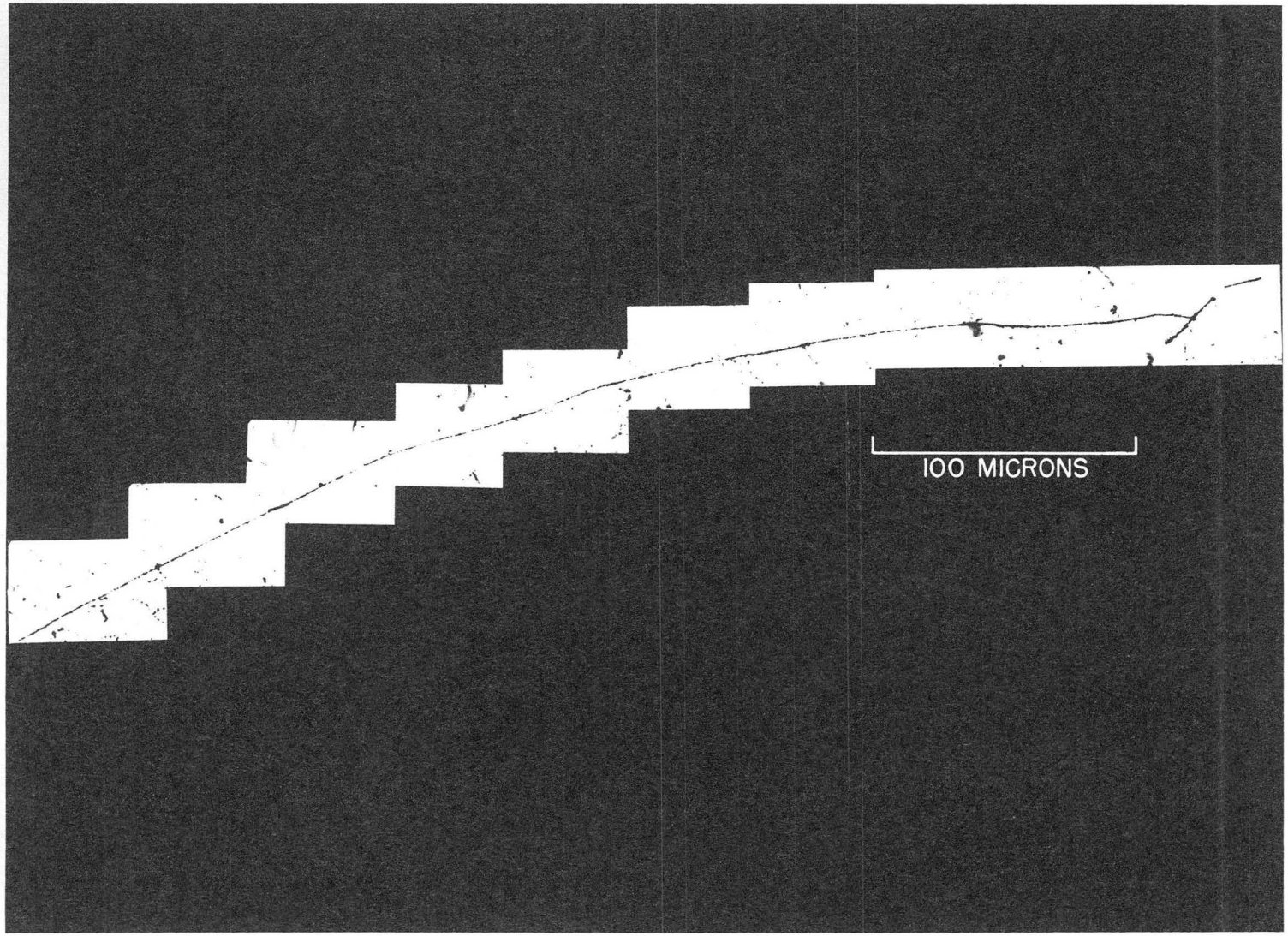

FIG. 3

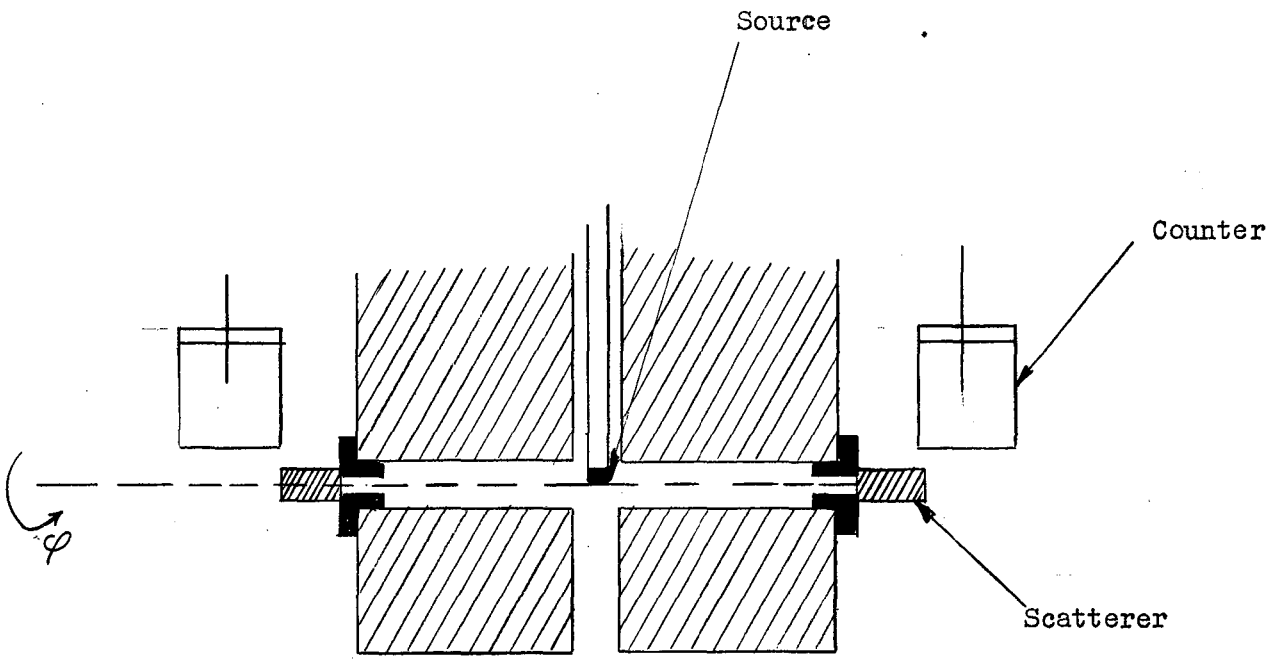

Fig. 4

Suggested experiment for determining polarization of quanta emitted in the decay of neutral mesons.