UCRL 567
Cy 2

UNIVERSITY OF CALIFORNIA

Radiation Laboratory

TWO-WEEK LOAN COPY

This is a Library Circulating Copy which may be borrowed for two weeks. For a personal retention copy, call Tech. Info. Division, Ext. 5545

BERKELEY, CALIFORNIA

DISCLAIMER

This document was prepared as an account of work sponsored by the United States Government. While this document is believed to contain correct information, neither the United States Government nor any agency thereof, nor the Regents of the University of California, nor any of their employees, makes any warranty, express or implied, or assumes any legal responsibility for the accuracy, completeness, or usefulness of any information, apparatus, product, or process disclosed, or represents that its use would not infringe privately owned rights. Reference herein to any specific commercial product, process, or service by its trade name, trademark, manufacturer, or otherwise, does not necessarily constitute or imply its endorsement, recommendation, or favoring by the United States Government or any agency thereof, or the Regents of the University of California. The views and opinions of authors expressed herein do not necessarily state or reflect those of the United States Government or any agency thereof or the Regents of the University of California.

Copy No. 2

UCRL 567

UNCLASSIFIED

INELASTIC SCATTERING OF 30 MEV PROTONS FROM CARBON AND ALUMINUM

By

Albert Silverman
A.B. (University of California) 1941

DISSERTATION

Submitted in partial satisfaction of the requirements for the degree of

DOCTOR OF PHILOSOPHY

in

Physics

in the

GRADUATE DIVISION

of the

UNIVERSITY OF CALIFORNIA

Approved:

.....

.....

.....

Committee in Charge

TABLE OF CONTENTS

CHAPTER		Page No.
I	Introduction	3
II	Experimental Method	10
III	Analysis of Data	24
IV	Results and Conclusions - Carbon	28
V	Results and Conclusions - Aluminum	35
VI	Acknowledgments	44
VII	Table of References	45

INELASTIC SCATTERING OF 30 MEV PROTONS FROM CARBON AND ALUMINUM

Albert Silverman

I. INTRODUCTION

The investigation of nuclear energy levels has been the subject of a great deal of research in the last decade or so, and, at present a rather large body of information has been accumulated on the subject(1). Unfortunately, there is no theoretical interpretation that fits this data into a unified scheme. In fact, some of the results seem to be in serious disagreement with even the most general notions of nuclear structure; for example, the failure of mirror nuclei to exhibit the same level structure(2). It is clear that more experimental evidence is required on the matter. However, the information available is sufficient to provide a rather general picture of the behavior of nuclear energy levels as a function of the excitation energy. The first few levels usually have separations of about one hundred kilovolts*. One also knows from neutron resonance absorption measurements that at excitations corresponding to the binding energy of the neutrons (about 8 Mev) the levels are only several electron volts apart. Thus, the general picture is one of rather rapidly decreasing distance between levels as the excitation increases. Furthermore, the excited states of nuclei decay either by a γ-radiation or by particle emission. When the excitation is several Mev greater than that required to

---

*The energy of the first few excited levels fluctuates wildly in going from one element to another and it may be slightly misleading to talk about an "average" behavior. However, if one excludes the very light elements this difficulty is largely eliminated.

liberate a particle, this process is more rapid than γ-radiation. Let us consider the region of excitation where particle emission is the predominant method of decay-- say, energies above 10 Mev. It is possible to calculate the half-life of such a state using a statistical theory of the nucleus(3) as about 10^{-19} sec. for an excitation of about 10 Mev in a nucleus of $Z \cong 50$. That this must be the order of magnitude of the half life can be seen by a rather simple qualitative argument. The half life of the excited state must certainly be long compared with the time required for a nucleon of several Mev to cross the nucleus. This time is of the order of $10^{-22} - 10^{-23}$ sec. Further, since particle emission is faster than γ-radiation, the half life must be short compared to the half life for γ-radiation. This can be estimated using classical rate of radiation formulae or can be measured from the neutron resonance experiments and turns out to be about $10^{-15} - 10^{-16}$ sec. Thus, the half life is long compared with 10^{-22} sec. and short compared with 10^{-16} sec. and a value of 10^{-19} sec. seems quite reasonable. Using this value to estimate the width of the excited state by the uncertainty relation, $\Delta E \cong \frac{\hbar}{t}$, one finds $\Delta E \cong 10$ Kev. Since this is large compared to the distance between levels at these excitations, the levels overlap and there is, effectively, a continuum of levels.

Information about nuclear energy levels has been gotten primarily in three ways; 1) γ-ray spectroscopy, 2) resonance absorption and 3) inelastic scattering. There are several ways in which the measurement of γ-ray energies provides information about nuclear levels.

For example, there are many radioactive nuclei known which decay by β emission followed by one or more γ-rays. Na^{24} is known to decay by electron emission followed by two γ-rays in cascade[4]. The measurement of the energies of these γ-rays then yields information about the energy levels of the product nucleus, Mg^{24}. Or, one may measure the energies of the γ-rays in a resonance absorption process, i.e. (p,γ) or (n,γ) reaction, and get information about the levels in the compound nucleus resulting from the absorption.

The method used to measure the γ-ray energy depends largely on the order of magnitude of the energy under investigation. In the region of one Mev or so, the measurement of the energy of the photo electrons produced by the γ-rays provides a convenient method. Kai Siegbahn[5], among others[4], using a beta ray spectrograph to measure the energy of the photoelectrons found two γ's from Na^{24} with energies 1.380 Mev and 2.758 Mev. He was able to attain an accuracy of about 0.5 percent. Recently, DuMond[6] has developed a crystal spectrometer for use at energies about one Mev which has an accuracy of about 0.01 percent. For higher energy γ-rays (10 Mev or above) one usually measures the energy of the pairs produced in a lead radiator. Walker and McDaniel[7] used this method to measure the energy of the γ's from the following reaction. Li^7(p,γ)Be. They found 2 γ's, one of 17.6 Mev and one of 14.8 Mev. Their accuracy was about 5 percent.

The resonance absorption technique has been used primarily with neutrons[8] although some work has been done with proton absorption[9]. Of course, resonance absorption measurements do not give energy levels

directly unless the binding energy of the absorbed particle is known. However, this type of measurement gives direct information on the spacing of nuclear levels at excitations corresponding to the binding energy of the absorbed particles.

Inelastic scattering methods have also been used extensively for the investigation of nuclear energy levels[10]. This method is in general not so accurate as the ones previously described but it is more versatile for several reasons. The previous methods have been used only in the investigation of the spectra from nuclei in the discrete region. They are not applicable to the region of excitation where one has a continuum of levels. Inelastic scattering may be used to investigate the continuum region. Consider, for example, the following reaction.

$$Al^{27} + p \longrightarrow Al^{27*} + p$$

We assume that the proton emerges with less energy than when it entered, i.e., has been inelastically scattered leaving the aluminum in an excited state. The energy distribution of the scattered protons gives information about the excited states of the aluminum nucleus. The above reaction might better be written as follows:

$$Al^{27} + p \longrightarrow Si^{28*} \longrightarrow Al^{27*} + p$$

since according to the Bohr[11] model of the compound nucleus the reaction actually takes place as indicated with the Si^{28} forming a very definite intermediate stage in the process. According to this picture the analysis of the decay of the compound nucleus can be made independently of how the compound nucleus was formed since this state

lasts a sufficiently long time to erase all memory of the method by which the excitation took place*. Consider, then, the following process. The Si^{28} is excited to an energy E_0 by the incoming proton. (Fig. I.1.) This state decays by emission of a proton of energy $\mathcal{E}$ leaving the residual nucleus, Al^{27}, with excitation E. If E is sufficiently large it is possible to investigate the continuum region. Also, by looking at higher energy protons, say $\mathcal{E}'$, it is possible to gather information about the discrete levels in Al^{27}. The inelastic scattering method is more versatile than the ones previously described also in that one can control the excitation of the compound nucleus simply by controlling the energy of the bombarding particle.

Suppose we concentrate for a moment on the continuum region and ask precisely what information the energy distribution of the inelastically scattered protons yields. One can derive the following relationship on very general grounds using only a detailed balancing argument(3)**.

$$I(\mathcal{E})\,d\mathcal{E} = K\mathcal{E}\,\sigma_c(E_0,\mathcal{E})\,W_R(E)\,d\mathcal{E} \qquad \text{(I-1)}$$

---

*The basic assumption of the Bohr hypothesis is that the mean free path of a nucleon in nuclear matter is small compared to nuclear dimensions. For high energies, this picture must be modified in accord with the "transparency" model proposed by Serber(12). However, at an energy of 30 Mev, with which this paper concerns itself, the nucleus is still "opaque" and the "transparency" considerations are not yet important.

**Strictly speaking this derivation should be made for each angular momentum state. The above result is considered an average over states of different angular momenta. This is presumed to be reasonable if the excitation is sufficiently high to excite states with many different angular momenta. This assumption shall be used consistently throughout the paper in considerations dealing with the continuum region.

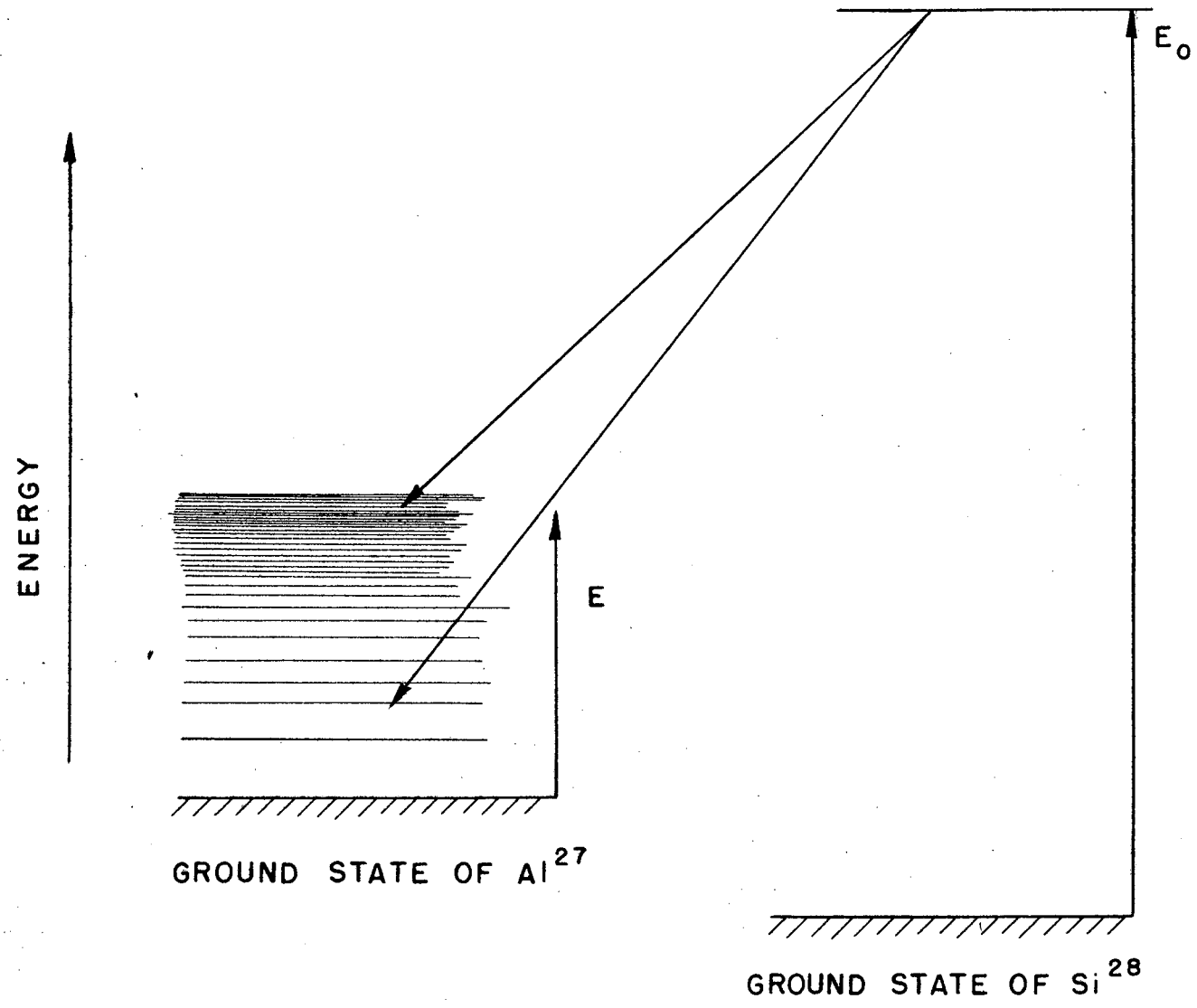

FIG. I - I

where

$I(\mathcal{E})$ = number of protons emitted per unit time with Energy $\mathcal{E}$.

K = constant independent of the energy of the proton.

$\mathcal{E}$ = energy of the protons.

$W_R(E)$ = Density of levels in Al^{27} at excitation E.

$\sigma_o(E_o, \mathcal{E})$ = capture cross section of the protons by Al, forming Si^{28} with excitation E_o.

The excitation E of Al^{27} may be written

$$E = E_o - E_b - \mathcal{E}$$

where E_b = binding energy of the proton to Si^{28}.

The capture cross section for protons of several Mev or higher may be taken to be

$$\sigma_o(E_o, \mathcal{E}) = \pi R^2 P(\mathcal{E})$$

Here, R = radius of Al^{27} nucleus.

$P(\mathcal{E})$ = probability of penetrating the potential barrier. That is, we take the capture cross-section as equal to the nuclear area modified by the effect of the Coulomb barrier. An examination of Eqn. (I-1) shows that the only quantity on the right which is unknown is $W_R(E)$ so that the determination of the energy distribution of the scattered protons provides a very direct measurement of the density of nuclear energy levels in Al^{27} as a function of the excitation energy.

The work described in this paper concerns itself with both regions - discrete and the continuum. The work done on carbon involved discrete levels and the work on aluminum - using the reaction shown above - concerned the continuum region.

II. EXPERIMENTAL METHOD

The protons were detected in photographic plates and their energy found by measuring their range, part of which was in an absorber between the target and the plate and the remainder of which was in the emulsion. Fig. (II-1) shows schematically the arrangement used.

The 32 Mev proton beam from the linear accelerator is allowed to pass through an analyzing magent whose purpose is to eliminate any low energy component of the beam. The unanalyzed beam contains 16 Mev H_2^+ ions. These are stripped at the 1/4 mil Al stripping foil and form an 8 Mev proton component which the analyzing magnet eliminates. Upon emerging from the magnet, the beam passes through a collimator into an evacuated scattering chamber which houses the target and plate holders. The target is set at 45° with respect to the beam direction. The plate holders are set at 96° with respect to the beam direction. After passing through the target the beam is collected in an integrator.

Collimator:

The details of the collimator are shown in Fig. II-2. The external pipe is made of 1/8 in. brass which is sufficiently thick to stop the beam as are the 3/8 in. carbon disks. The disks are made of carbon for two reasons. 1) The $C^{12}(p,n)N^{12}$ threshold is about 20.2 Mev so that the number of high energy neutrons produced in the slits is reduced. 2) The low Z is most favorable for the stopping power vs. scattering

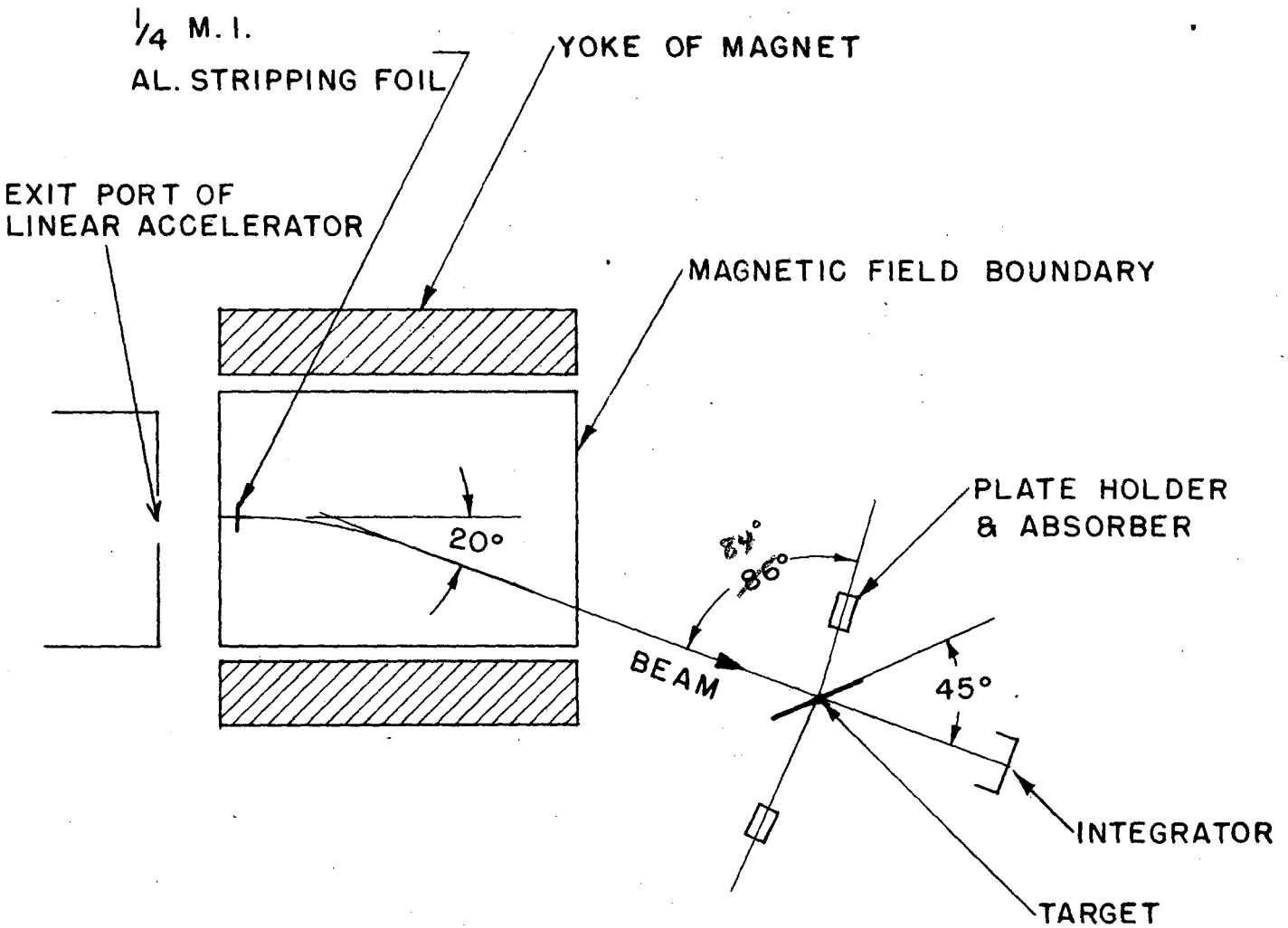

LAYOUT OF APPARATUS

FIG. II -1

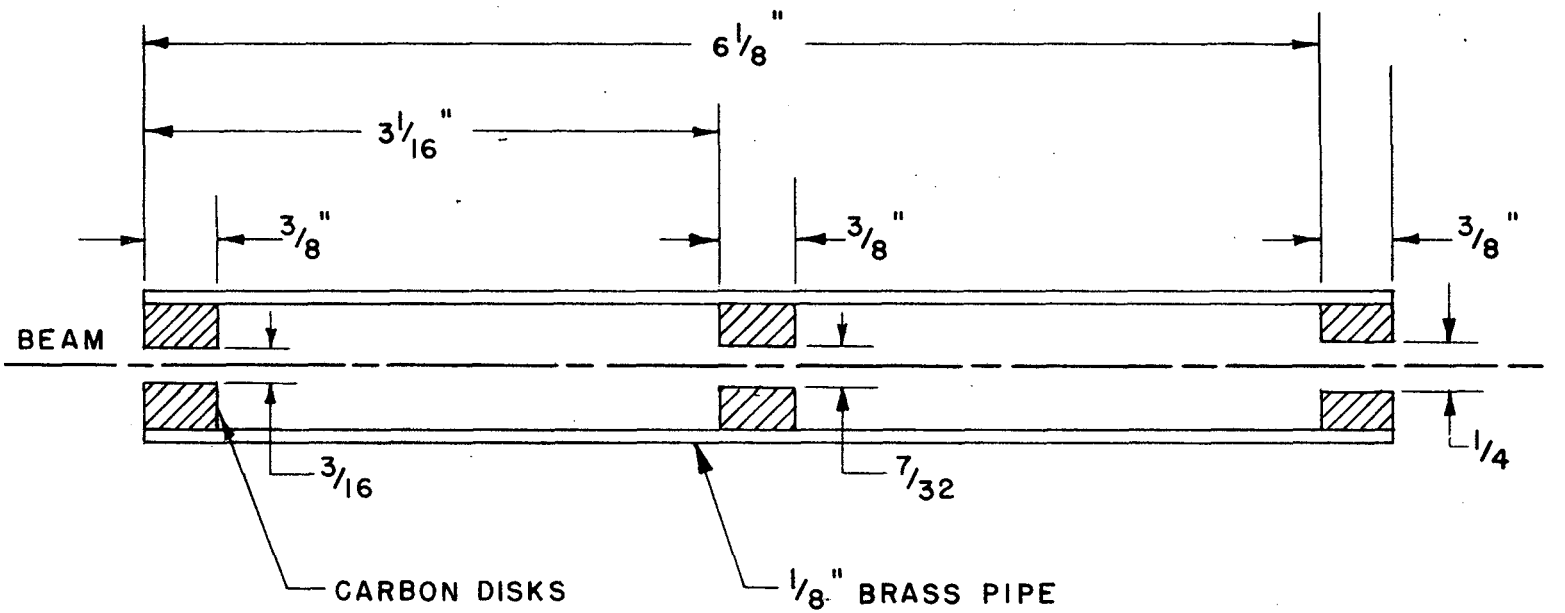

COLLIMATOR

FIG. II-2

ratio. The geometry of the collimator is designed to minimize the number of protons which can be scattered from the last slit. This problem was not severe in this case since the plates were well shielded from the direct beam and no protons scattered from the last slit could be seen by the plates. However, the slit scattered protons could produce neutrons in the shielding material which would increase the general background (see section on background). The collimator as shown proved to be generally satisfactory.

Scattering chamber, plate holders and absorbers:

The scattering chamber is shown in Fig. (II -3). The entrance flange was bolted onto the output flange of the analyzing magent and the exit flange onto the integrator. The entrance foil was one mil copper and the exit foil 5 mils aluminum. The walls of the chamber were 1/8 in. brass.

The plate holders and the absorbers are shown in Fig. II -4. They are mounted on 3/4 in. aluminum plate which served as the top cover for the scattering chamber. The camera allowed the simultaneous exposure of eight plates each with its center at an angle of 96° with the beam axis. The scattered protons entered the emulsion at angles of from 14.5° to 18.5° over the region of the plate scanned. To cover the energy region desired an absorber of either copper or aluminum was placed between the target and each plate. The absorbers were increased in steps of seven mils (48 mg/cm^2) equivalent of aluminum which corresponds to 160 μ of emulsion. Track lengths from 15 μ - 200 μ were read on each plate. This gave an overlap region

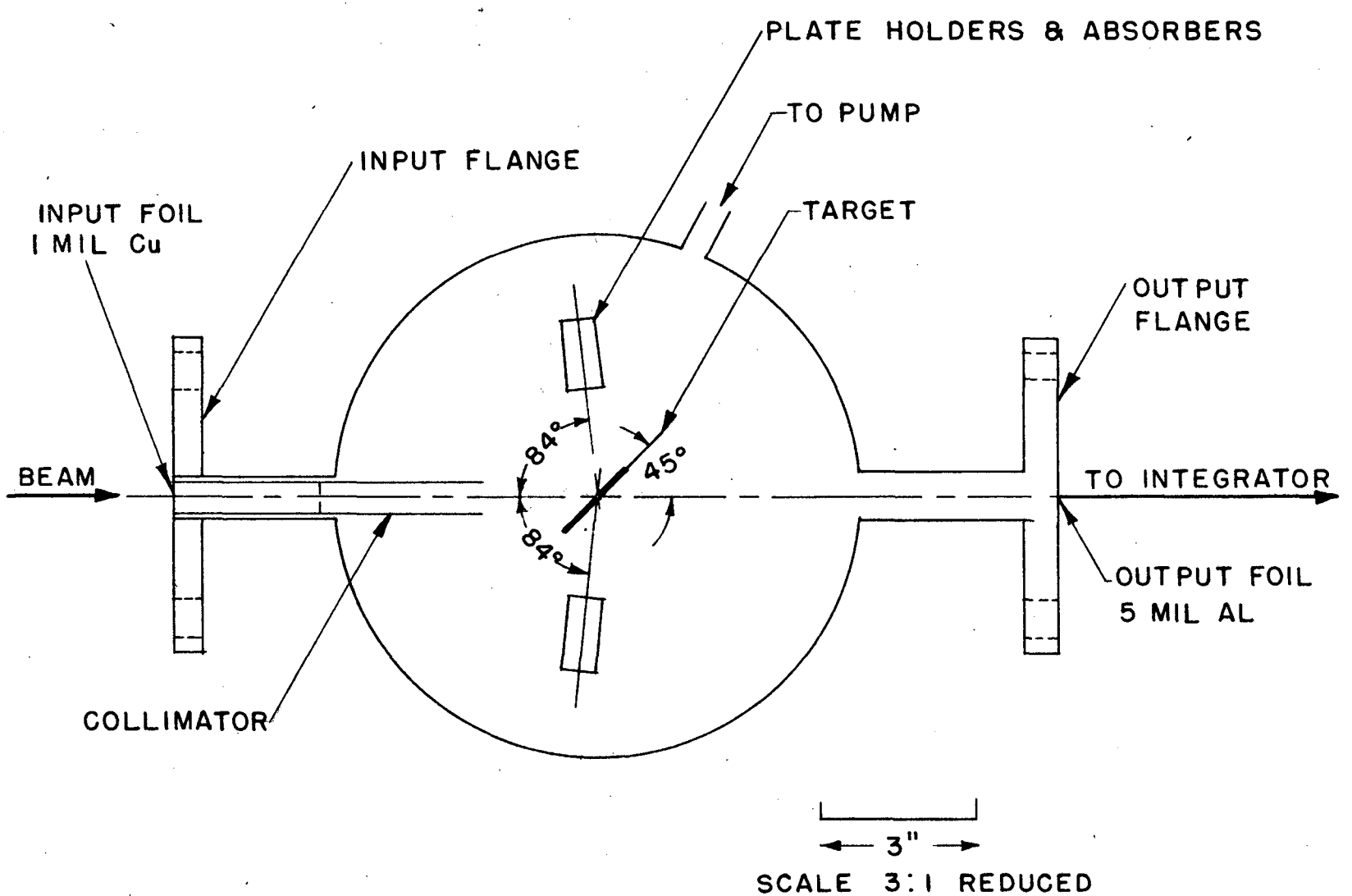

SCATTERING CHAMBER

FIG. II -3

14458-1

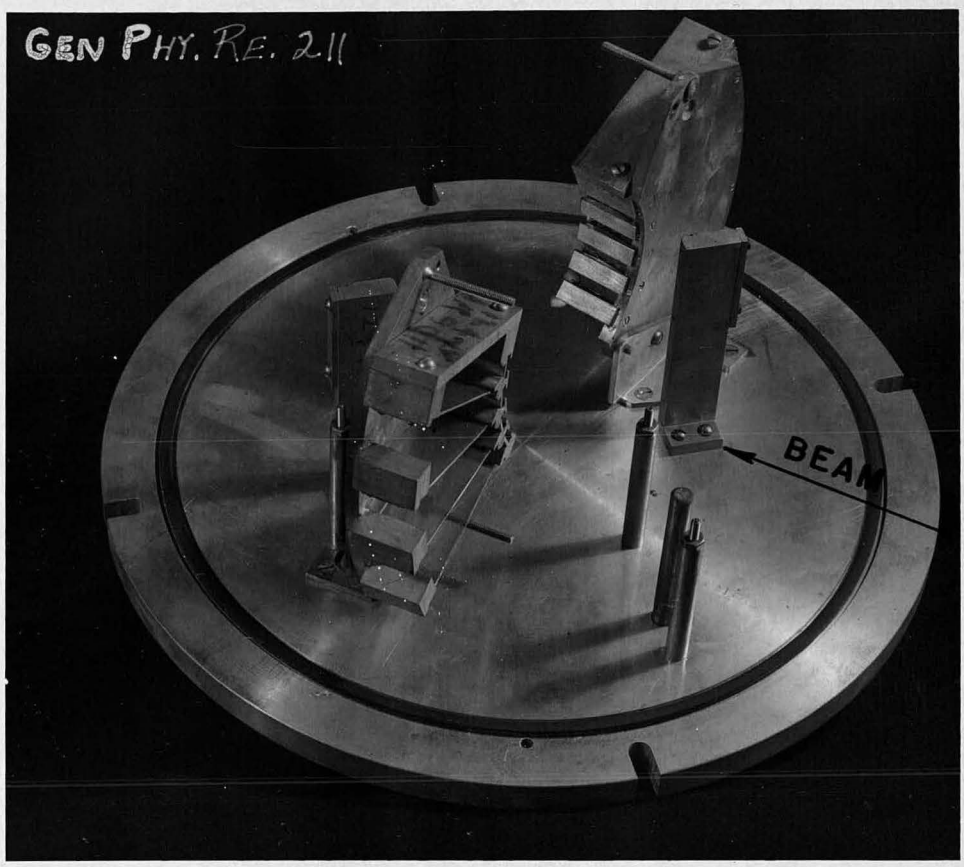

FIG. II - 4

KODAK—SAFETY FILM 0Z 2 24

of 25 μ on each plate for checking purposes. When there was no serious disagreement, the tracks from 0 - 40 μ were disregarded and the data from the previous plate in the region from 160 μ - 200 μ was used. Tracks shorter than 15 μ (and to some extent from 15 μ - 40 μ) were considered unreliable since they spend such a large part of their range in the absorber that scattering would become excessive; also, tracks shorter than 15 μ made difficult the determination of their direction. Table II-1 shows the energy interval included in each plate.

The first attempt to do this experiment was made by allowing the protons to enter the plate at grazing incidence and to measure all energies at once allowing all of the range to occur in the emulsion. This proved to have two serious difficulties; one purely practical and one theoretical. The practical difficulty was that the measurement of ranges in emulsion covering several fields of view proved to be time consuming and tedious. Limiting the track lengths read to 200 μ made it possible to keep the entire track in one field of view at a convenient over-all magnification of 440. A smaller magnification made the observation and measurement of tracks difficult and a larger magnification was unnecessary.

The theoretical difficulty in getting all energies in one plate involved the question of scattering out of the emulsion. This correction would have to be made as a function of energy. It seemed wiser to avoid this correction if possible. By allowing the tracks to enter at about 15° and measuring lengths 200 μ or less in a 100 μ emulsion, this

correction was negligible. The tracks were measured by means of an eyepiece reticule calibrated by means of a Bausch and Lomb stage micrometer.

The absorbers were placed on an approximately spherical surface of radius 6.3 cm centered on the target. This was accomplished as follows. The absorbers were 1 in. by 1/4 in., the long dimension being in the direction along which the polar angle changes. Along this dimension the absorber was bent so that it formed part of a cylindrical surface whose axis passed through the target. The short dimension was so oriented that the perpendicular through the center of the absorber passed through the target. This method of mounting the absorbers insured that the effective thickness of absorber for the scattered protons varied by less than 0.2 percent from the measured thickness. This is less than the range straggling which is about 1 percent.

Processing of plates:

The plates used were Ilford E-1 100 μ emulsions. These plates are sufficiently insensitive so that one may distinguish alpha particles but not deuterons from protons. This is shown quite clearly in the microphotograph shown in Fig. II-5. The two heavy tracks at the lower left are alpha particles. All the other tracks are taken to be protons. The plates were developed for 30 minutes in D19 developer diluted 3:1. They were then washed for 2 minutes and placed in an acid fixing bath until clear. The fixing process took about 3 hours. They were then washed for an hour and dried. The temperature of all baths was kept at 68 $\pm$ 2° F. Some difficulty was encountered in the emulsions peeling from the glass on developing if they had been left in the evacuated

Table II-1

Plate number	E_{min}(Mev)	E_{max}(Mev)
1.	0	5.55
2.	4.85	7.80
3.	7.30	9.6
4.	9.2	11.3
5.	10.9	12.8
6.	12.4	15.1
7.	14.8	16.2
8.	16.0	17.4
9.	17.2	18.6
10.	18.3	19.6
11.	19.4	20.6
12.	20.4	21.6
13.	21.4	22.6
14.	22.4	23.5
15.	23.3	24.4
16.	24.2	25.2
17.	25.0	26.0
18.	25.8	26.8
19.	26.6	27.5
20.	27.3	28.2
21.	28.0	28.8
22.	28.7	29.5
23.	29.4	30.1
24.	30.0	30.7
25.	30.6	31.2
26.	31.1	31.7
27.	31.6	32.1

correction was negligible. The tracks were measured by means of an eyepiece reticule calibrated by means of a Bausch and Lomb stage micrometer.

The absorbers were placed on an approximately spherical surface of radius 6.3 cm centered on the target. This was accomplished as follows. The absorbers were 1 in. by 1/4 in., the long dimension being along the polar angle. Along this dimension the absorber was bent so that it formed part of a cylindrical surface whose axis passed through the target. The short dimension was so oriented that the perpendicular through the center of the absorber passed through the target. This method of mounting the absorbers insured that the effective thickness of absorber for the scattered protons varied by less than 0.2 percent from the measured thickness. This is less than the range straggling which is about 1 percent.

Processing of plates:

The plates used were Ilford E-1 100 μ emulsions. These plates are sufficiently insensitive so that one may distinguish alpha particles but not deuterons from protons. This is shown quite clearly in the microphotograph shown in Fig. II-5. The two heavy tracks at the lower left are alpha particles. All the other tracks are taken to be deuterons. The plates were developed for 30 minutes in D19 developer diluted 3:1. They were then washed for 2 minutes and placed in an acid fixing bath until clear. The fixing process took about 3 hours. They were then washed for an hour and dried. The temperature of all baths was kept at 68 $\pm$ 2° F. Some difficulty was encountered in the emulsions peeling from the glass on developing if they had been left in the evacuated

system more than several hours.

Integrator:

The integrator used was designed and built by Mr. Lee Aamodt of the Radiation Laboratory. Fig. II -6 shows schematically the principle of operation. The beam was collected in a Faraday cup placed in an evacuated chamber. The charge was collected across a low leakage condenser and fed onto the grid of a VX-41 tube. The charge accummulated was measured by measuring the potential necessary to cancel that produced by the integrated charge. Secondaries were prevented by a biasing voltage of several hundred volts on the Faraday cup. The accuracy of the method is estimated at about 3 percent.

Exposure:

The exposures made varied from an integrated beam of about 10^{-7} Coulombs to 5×10^{-6} Coulombs depending on the particular energy region under investigation. With an average beam of about 5×10^{-11} amperes which cleared the collimator, the time to collect 10^{-7} Coulombs was about 30 minutes.

Criteria for acceptable tracks:

In order to count a track as a scattered proton it had to fulfill the following two conditions.

a) It had to start at the top of the emulsion.

b) Its direction had to be correct.

Both these statements can be made somewhat more quantitative. With the optical system used the top of the emulsion could be distinguished to about 3 μ. In order that a track be counted there had to be no

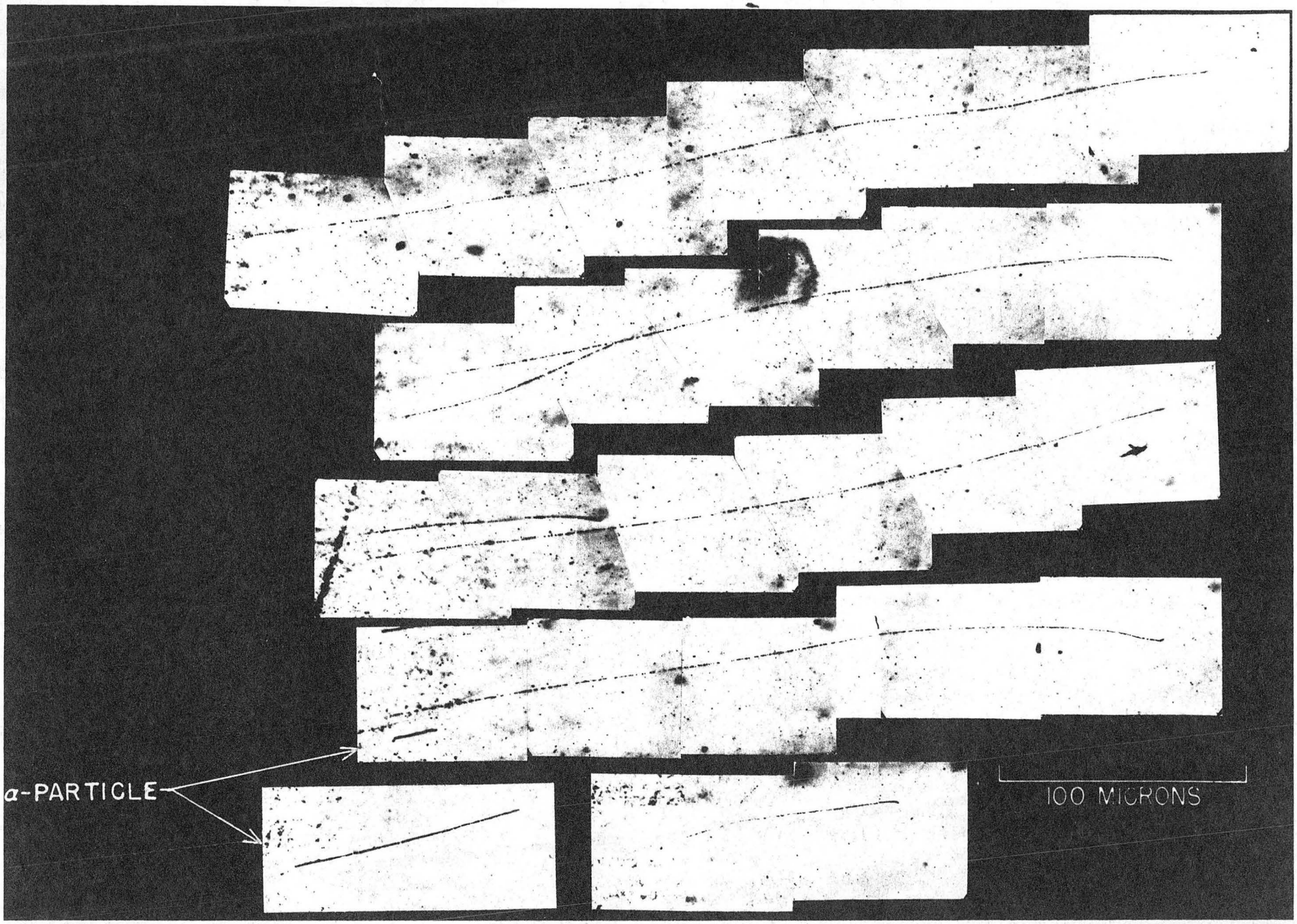

FIG. II- 5

OZ 798

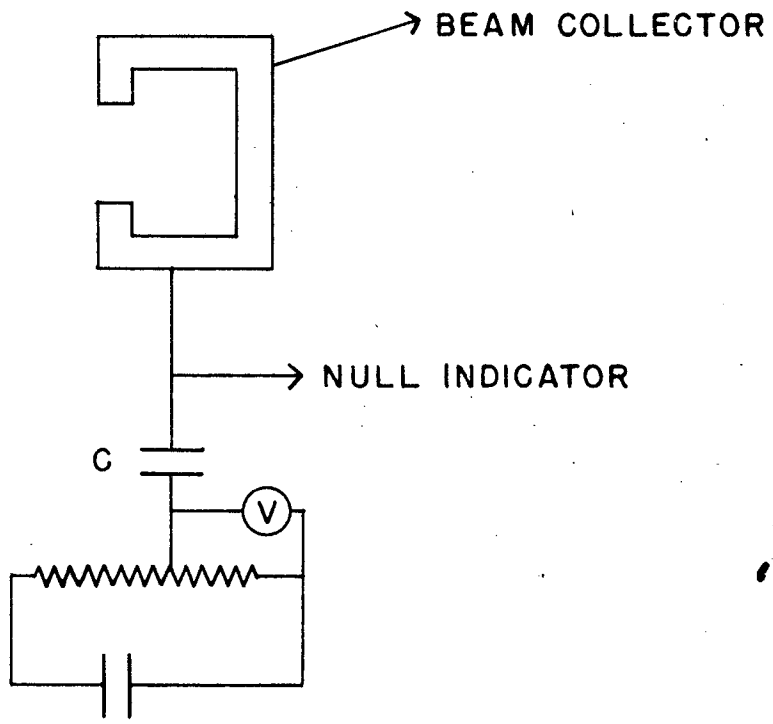

SCHEMATIC DRAWING OF INTEGRATOR

FIG. II -6

random background visible above the track. The strictness with which criterion (b) was required depended upon what region of the energy distribution was under investigation. For the lowest energy plate, which had no absorber between it and the target, the criterion was enforced to within several degrees. For the plates toward the high energy region the direction criterion was relaxed since some scattering in the absorber is expected. Since the minimum track length which was actually used in tabulating the data was 40 μ, the minimum residual range after leaving the absorber was equivalent to about 2 mils of aluminum. The curve shown in Fig. II-7, was plotted from Williams'[13] formula for the mean scattering angle after passing through a fraction x of its range. Consulting this graph made it possible to adjust the direction criterion to the energy band being scanned. The angular spread allowed was at least three times the mean scattering angle in all cases.

Region of plates scanned:

The absorber aperture determined the region of the plate along which tracks should occur. Fig. II-8(a) shows the geometry of the system. The distance d = 3.2 cm shows the portion of the plate which could see the target through the absorber. Fig. II-8(b) shows a top view of the plate. The region included between the dashed lines was the region to which the scanning was limited.

Background:

Most of the background seemed to be due to collisions between neutrons and protons in the emulsion. In general, the direction of the background tracks was random and they did not start at the

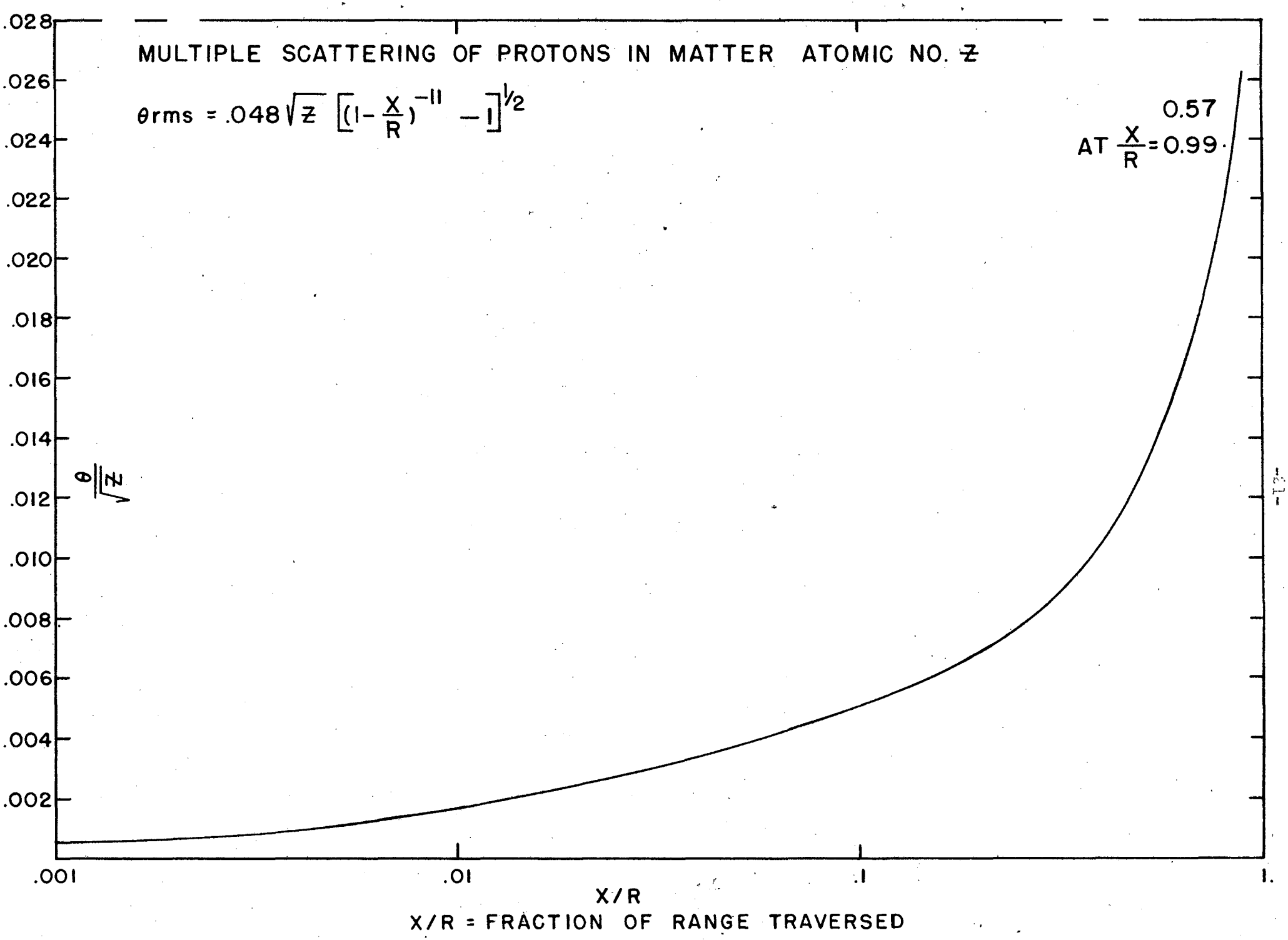

FIG. II-7

14454-1

GEOMETRY OF ABSORBER

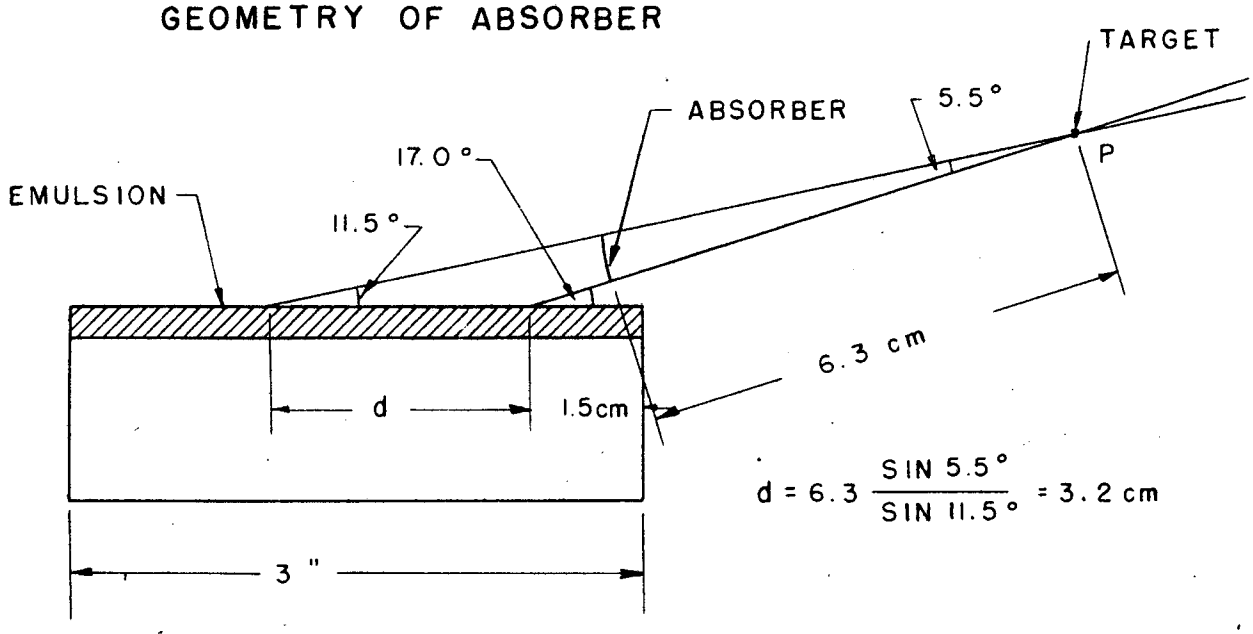

FIG. II - 8 (a)

AREA OF PLATE EXPOSED

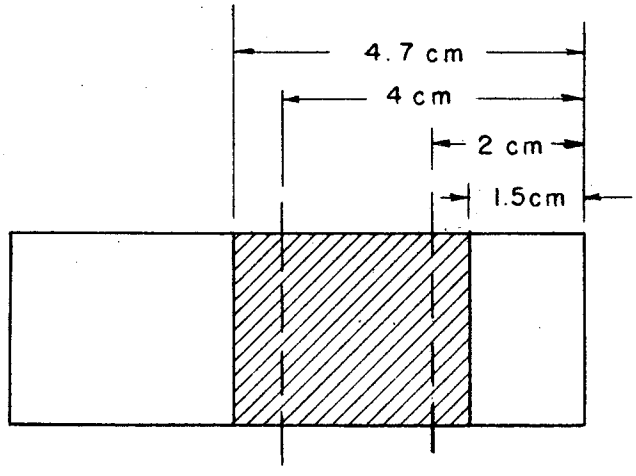

FIG. II - 8 (b)

top of the emulsion. The background was checked by two separate methods:

a) with no target,

b) with sufficient absorber to stop the beam.

Objection might be raised to the latter method in that the scattered protons could produce neutrons in the absorber. However, since 200 mils of Al was used to stop the protons, this effect can be shown to be negligible*. In the high energy tail of the aluminum distribution (Fig. V-1) the background correction was about 20 percent. In all other regions the correction was much less and in most cases was not made.

Alignment:

The alignment of the scattering chamber was made visually. A picture of the beam was taken by allowing it to pass through a piece of glass for about 30 sec. This exposure was made at two different points and the direction of the beam after leaving the collimator was so determined. The scattering chamber and collimator were then aligned by telescope along this direction. During the course of a run, the magnetic field would vary sufficiently to destroy the alignment. This was corrected simply by maximizing the beam through the collimator.

---

*Assume the cross section for a proton to produce a neutron to be πR^2. Then, the probability, P, that a proton produce a neutron in 200 mils of Al is $P = N\sigma t \cong 0.03$. This must be multiplied by the probability that this neutron will be going in the direction of the plate. Assuming spherically symmetric distribution of neutrons this factor is about 0.1. Thus, the probability that the scattered proton produce a neutron going in the direction of the plate is about 0.3 percent. This is certainly negligible.

III. ANALYSIS OF DATA

The quantity desired from the experiment is the differential cross section per unit solid angle at 96° per unit energy interval--henceforth taken as 1 Mev--which we call $\frac{d\sigma(96^\circ)}{d\Omega\, d E}$. The following section describes how this quantity is calculated from the experimental data.

Solid angle geometry.

Fig. III-1 shows the geometry for calculating the solid angle. Let the area read on the plate be the cross-hatched area. P is the point where the beam hits the target. The distance dy was sufficiently small in all cases so that θ can be considered to depend only on x. Consider the solid angle subtended by the area dy dx which we call $d^2\Omega$.

$$d^2\Omega = \frac{dA \cos\theta}{r^2} = \frac{dy\, dx \cos\theta}{r^2}$$

$$x = h \tan\theta$$

$$dx = h \sec^2\theta\, d\theta$$

$$r^2 = x^2 + h^2 = h^2(1 + \tan^2\theta) = h^2 \sec^2\theta$$

Thus:

$$d^2\Omega = \frac{dy\, h \sec^2\theta \cos\theta\, d\theta}{h^2 \sec^2\theta} = \frac{dy}{h} \cos\theta\, d\theta$$

$$d\Omega = \frac{dy}{h} \int_{\theta_1 = \theta_1(x_1)}^{\theta_2 = \theta_2(x_2)} \cos\theta\, d\theta = \frac{dy}{h} \sin\theta \Big|_{\theta_1 = \theta_1(x_1)}^{\theta_2 = \theta_2(x_2)}$$

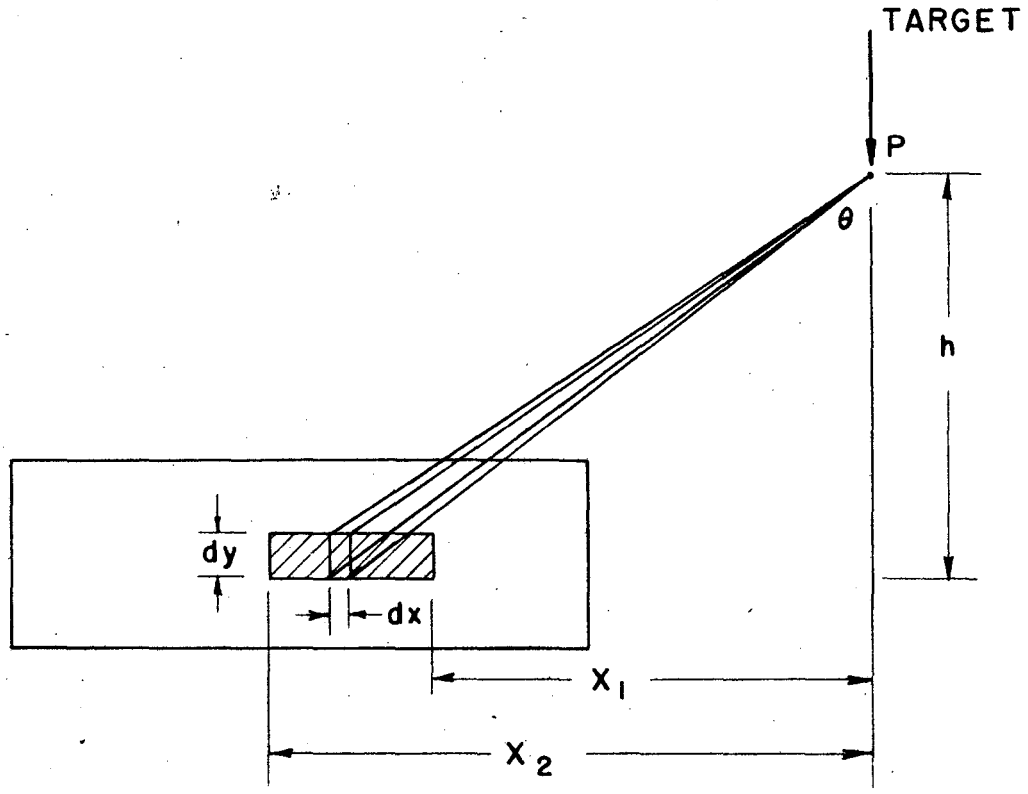

SOLID ANGLE GEOMETRY

FIG. III - I

Calculation of absolute cross section:

The number of tracks per unit range interval (usually 20 μ of emulsion) were tabulated and then the number per unit range interval vs. range plotted. To convert this to number per unit energy interval vs. energy one may proceed as follows. Consider a thickness t of absorber. The experimental observation consists in measuring the number of protons which fall in a range interval dt after passing through an absorber thickness t. We want to know the energy interval dE' at energy E' corresponding to a range between t and t + dt. We can write that

$$\Delta E' = \int_0^{t+\Delta t} \left(\frac{dE}{dx}\right) dx - \int_0^{t} \left(\frac{dE}{dx}\right) dx$$

$$= \int_t^{t+\Delta t} \left(\frac{dE}{dx}\right) dx$$

We consider that dt is sufficiently small so that $\frac{dE}{dx}$ is constant in this interval.

Then:

$$\Delta E' = \left(\frac{dE}{dx}\right)_{E'} \Delta t$$

Now, to calculate the absolute cross section we use the following formula:

$$\frac{d\sigma(96°)}{d\Omega\, dE} = \frac{\quad}{d\Omega\, dE\, N' N'' t}$$

where n = number of observed tracks

N' = total number of bombarding protons

N = number of target atoms/cm^3

t = thickness of target

$d\Omega$ and dE are the quantities discussed previously in this section and are calculated as shown above. For these calculations the range-energy curves and rate of energy loss vs. energy curves prepared by Aron, et al[14] were used.

IV. RESULTS AND CONCLUSIONS--CARBON

The carbon target used was one mil polystyrene. The hydrogen content in the target can give no contribution since the observation was made at 96° and there can be no proton-proton scattering at that angle. Observations were made at two different energies, 16.3 Mev and 31.5 Mev. The results are shown in Figs. IV-1, IV-2 and IV-3. Fig. IV-1 shows the number per unit range vs. range as an example of the raw data. All other results show the number per unit energy vs. energy. The experiment at 16.3 Mev is essentially a duplication of work done by Fulbright and Bush(10) and provided a valuable check on the performance of the apparatus. Each run shows two levels in C^{12}, one at 4.7 and one at 10.1 Mev. The half width at half maximum is about 0.4 Mev for the 32 Mev run and about 0.5 Mev for the 16 Mev run. The half width calculated from straggling, spread in polar angle, and target thickness is 0.3 Mev. The half width in the 16 Mev run is larger because of the energy spread introduced by stopping down the beam. Fulbright and Bush find three levels doing essentially the same experiment with a bombarding energy of 15 Mev. The levels they find are at 4.4 ± 0.2, 5.5 ± 0.3, and 9.7 ± 0.6 Mev. It is seen that the levels at 4.4 and 9.7 agree within the probable errors of the two measurements. However, no evidence is found in this experiment for the level at 5.5 Mev. A possible explanation lies in the fact that the results of Fulbright and Bush were obtained at an angle of 162° with respect to the beam direction. If both of the results are correct, they indicate that the angular distribution of the level at 5.5 Mev is such that it has a rather

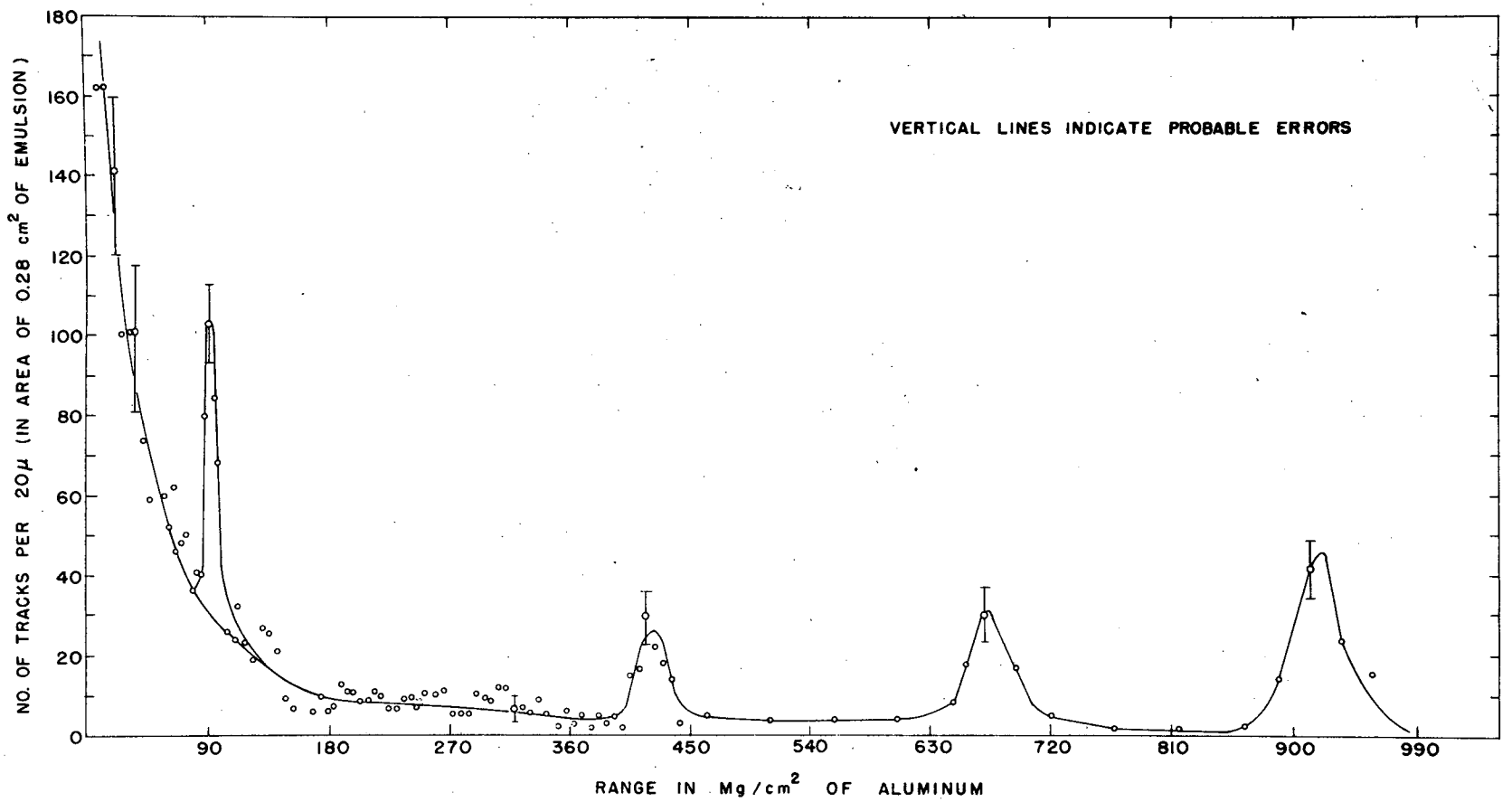

RANGE DISTRIBUTION OF CHARGED PARTICLES FROM CARBON BOMBARDED WITH 31.5 MEV PROTONS

FIG. IV-1

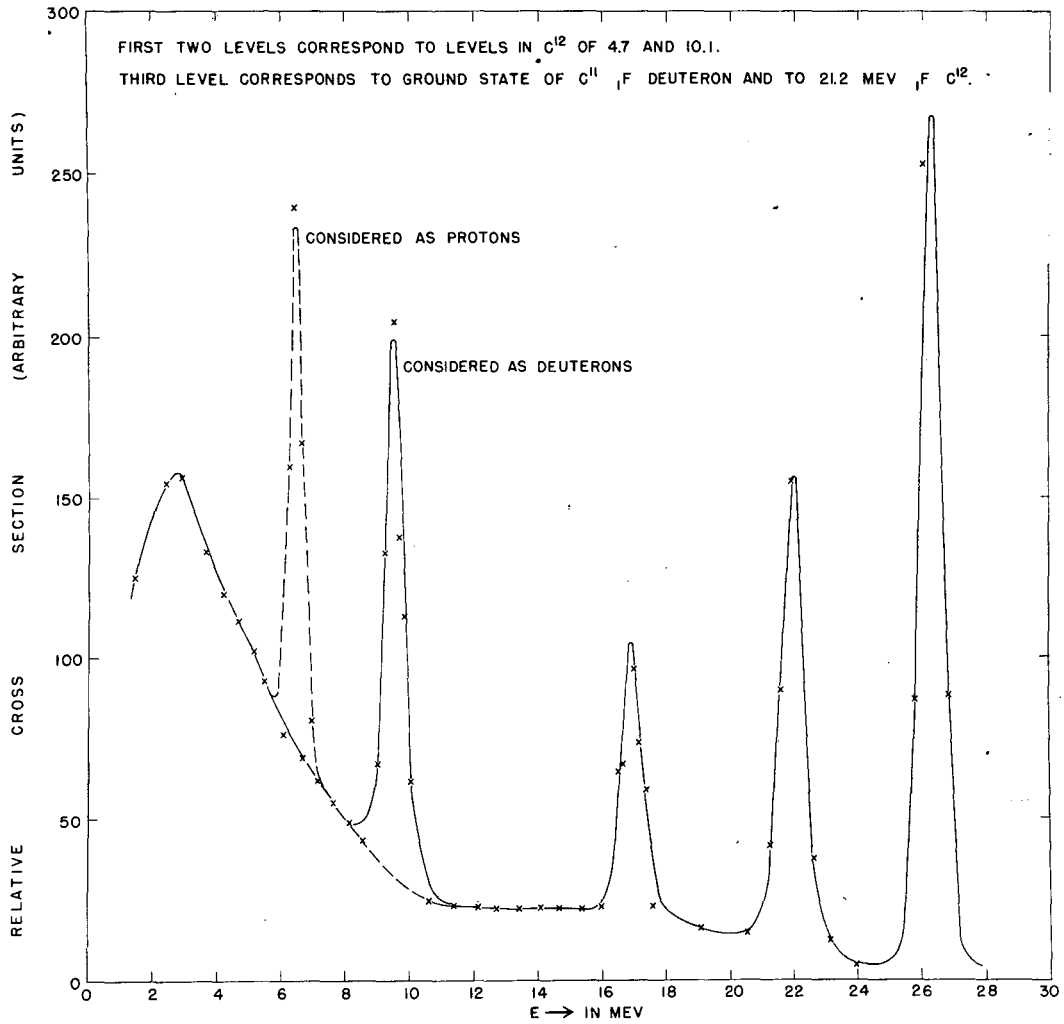

ENERGY DISTRIBUTION OF PROTONS FROM CARBON BOMBARDED WITH 31.5 MEV PROTONS

FIG. IV-2

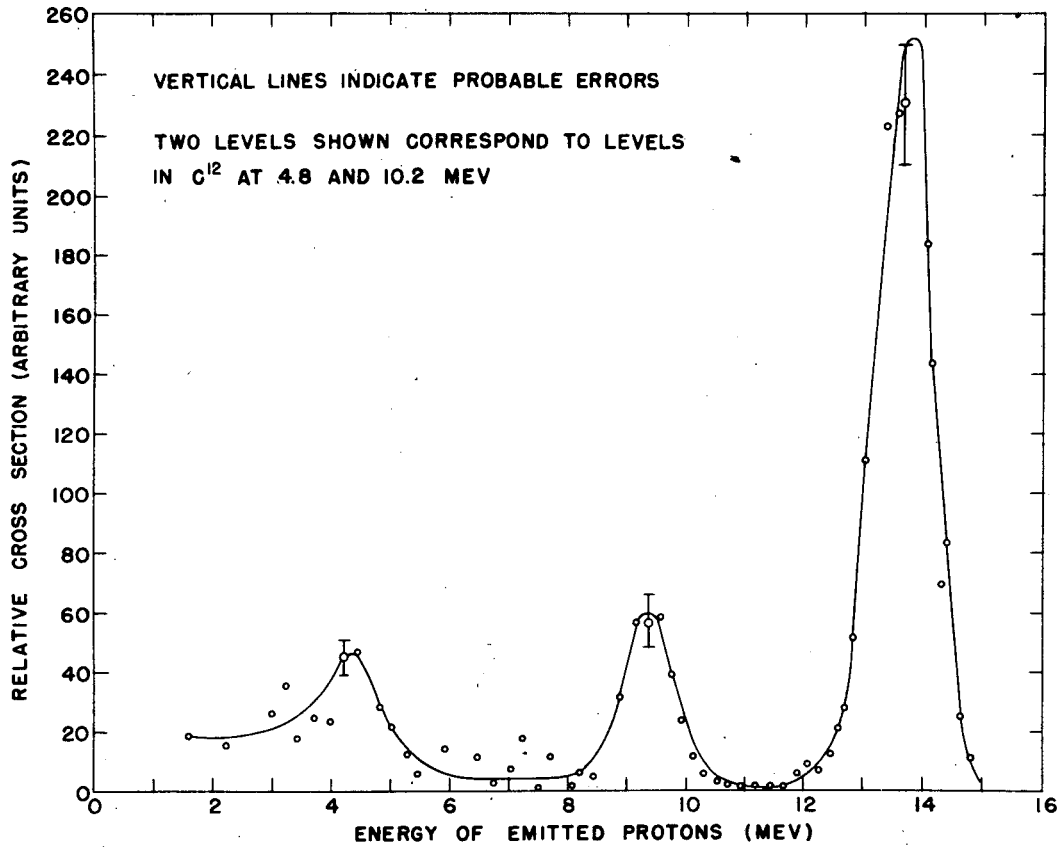

ENERGY DISTRIBUTION OF PROTONS FROM C^{12} BOMBARDED WITH 16.4 MEV PROTONS

FIG. IV-3

small intensity at 96°. Gibson[15], measuring the neutron spectrum for the reaction $B^{11}(d,n)C^{12}$, C^{12*} finds three levels in C^{12}, one at 4.47, one at 9.72 and, less certainly, one at 7.7 Mev. It is seen again that the levels at 4.47 and 9.72 Mev are in substantial agreement with the results quoted above. The 7.7 Mev level is not found by either Fulbright and Bush or us. However, this level had other possible origins, as Gibson points out, and is not so well established as the others.

The third level shown in the 31.6 Mev run has two possible interpretations. It was mentioned previously that it is impossible to distinguish deuterons from protons in the E-1 plates used. In principle, one can distinguish between protons and deuterons by counting grains. However, since the difference in the number of grains from the end of the range is only about 18 percent for protons and deuterons, one requires a track length of about 1000 μ to make the identification. The longest tracks available in this experiment were about 350 μ. Consequently, this was not attempted. If we consider the possibility that the third level is composed of deuterons arising from the reaction $C^{12}(p,d)C^{11}$ and that the C^{11} is left in the ground state, we find a threshold for the reactions of 16.7 Mev. The threshold calculated from the masses is 16.5 Mev. If we consider the level as consisting of protons, it leads to a level in C^{12} at 21.2 Mev. The low energy tracks could be associated with levels in C^{12} at excitations between 20 and 28 Mev, or could be due to protons arising from $C^{12}(p,np)C^{11}$ or $C^{12}(p,\alpha p)Be^{8}$ reactions. If the former alternative is correct, it indicates a rather sudden increase in level density

in C^{12} at excitations above 20 Mev.

The energy and relative intensity (see Table IV-1) of the third level in the 32 Mev run seem to indicate that it is composed of deuterons. From the threshold of the $C^{12}(p,pn)C^{11}$ reaction, Panofsky and Phillips[16] conclude that deuterons are emitted at threshold. The intensity of the supposed deuterons in this experiment suggests that a substantial fraction of the C^{11} is due to deuteron emission even at 32 Mev. This is not surprising in view of the scarcity of levels in C^{12} and the high binding energy (about 18 Mev) of a neutron to N^{13}, both of which mean that the processes competing with the deuteron emission are very much reduced.

The relative intensities of the excited states are of some interest. From the volume available in phase space, neglecting selection rules and statistical weights of the excited states, the ratio of the intensities in the different levels should be simply the ratio of the energies of the emitted protons. The calculated and observed intensities are shown in Table IV-1. It is seen that the agreement between the calculated and observed values is quite good. Since the calculation neglects selection rules, the results indicate that all of the reactions are equally allowed.

Perhaps the most striking result of the experiment is the scarcity of levels in C^{12} at excitations up to 20 Mev. The question arises whether all the levels are found by this experiment. It is clear that levels whose intensity would be reduced by a factor of 100, or probably even 10, over those observed would not be seen.

Table IV-1

	16 Mev Run		32 Mev Run	
	Observed	Calculated	Observed	Calculated
Ratio of intensity of 1st excited state to second excited state	2.2	2.1	1.6	1.2

		Assuming deuteron		Assuming Proton
	Observed	Calculated*		Calculated
		A	B	
Ratio of intensity of 1st excited state to 3rd level in 32 Mev run	1.4	1.25	0.8	4.2

*Case "A" neglects the statistical weight of the deuteron. Case "B" ascribes a statistical weight of 3/2 relative to that of proton. One cannot decide which is correct without knowing the angular momentum of the original excited state of C^{12}. It is likely that many states with different angular momenta are excited.

Obviously, any selection rules which would forbid, even mildly, the decay of the excited N^{13} to a particular state of C^{12} would have the effect of making this state unobservable by this experiment. It is quite certain the angular momentum and parity selection rules would have such an effect. However, one would guess that at excitations of 30 Mev, sufficiently many states of different angular momenta and different parity are excited in N^{13} to average out any such effect. In any case, the agreement between these results and those of previous investigators using different bombarding energies and different reactions is strong evidence that we are not missing many levels between the ground state and 10 Mev*.

*Of course, any level whose angular distribution was such as to give zero, or very low intensity at 96° would also be missed.

V. RESULTS AND CONCLUSIONS--ALUMINUM

The target used was one mil aluminum foil and the bombarding energy was 30.4 Mev. The results are shown in Fig. V-1. This distribution is quite different from that of carbon in that it shows a continuum, except for the elastic scattering, rather than discrete levels. This is somewhat surprising since it indicates a marked change in level structure in going from carbon to aluminum even though the number of nucleons has increased by only a factor of 2.25.

Before discussing the continuum distribution, I shall consider the elastic scattering results. There are two possible origins for the elastic scattering. It can come from the diffraction scattering, or, from the absorption and re-emission of the proton. Although these are two quite distinct processes, there is no possibility of distinguishing them experimentally. However, it is possible to argue that most of the elastic scattering must be due to the diffraction scattering on the following grounds. Dicke and Marshall[17], doing inelastic scattering on aluminum using 6 Mev protons, have shown the presence of levels in Al^{27} at 0.87, 2.03, 2.70 and 3.5 Mev. These are not seen as separated levels in the present experiment probably because the levels are too close together to be resolved with the statistics available in this region. However, there are some tracks in the region where these levels occur and it is presumed that these are due to protons in which the Al^{27} has been left in one of these low lying levels. It is seen however, that the intensity of the elastic peak is about 20 times that of the intensities of the low lying levels. It is difficult to understand why this should be true

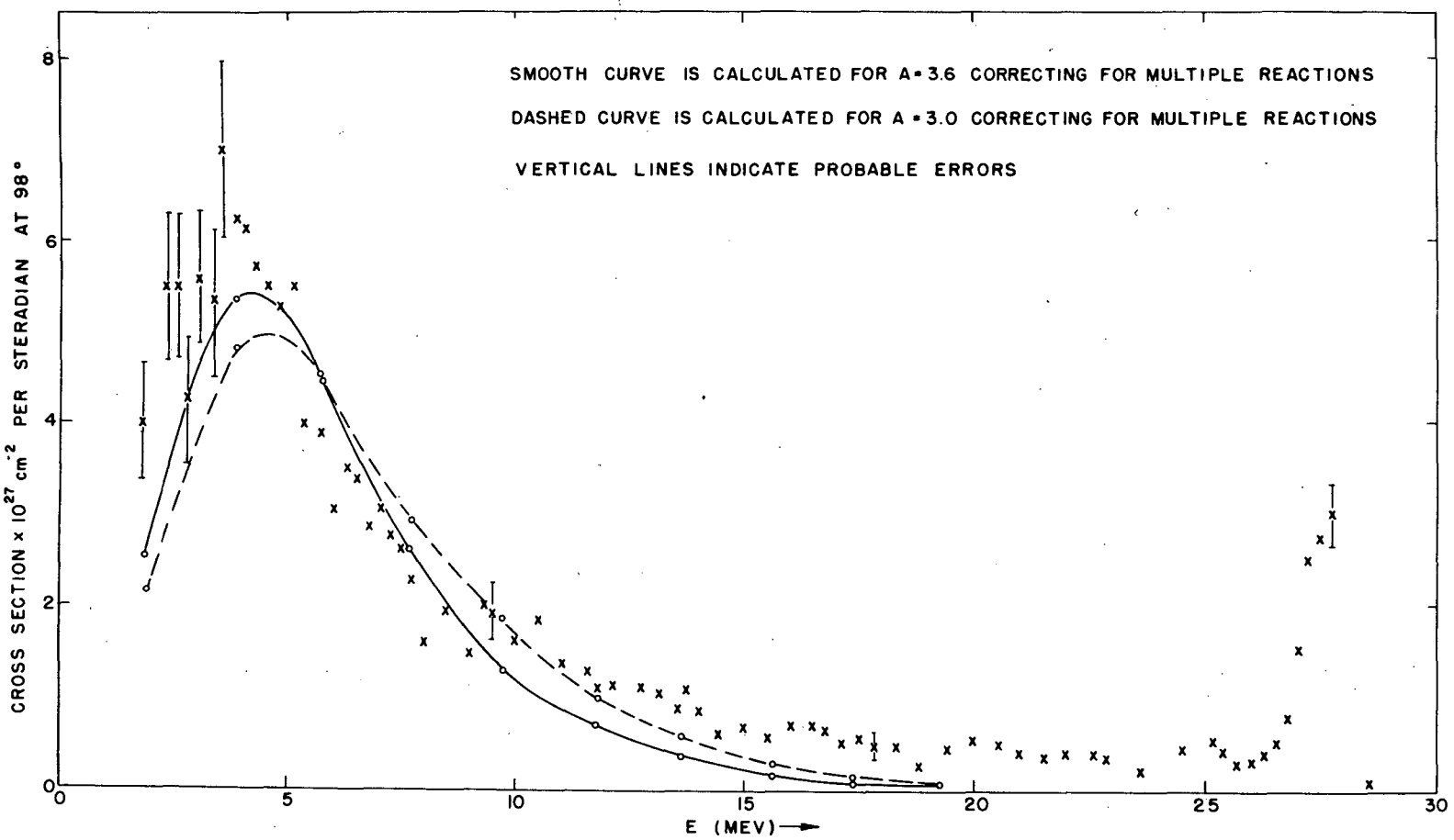

ENERGY DISTRIBUTION OF PROTONS FROM ALUMINUM BOMBARDED WITH 30.4 MEV PROTONS

FIG. V-1

if they arise from the same process, namely, the absorption and subsequent re-emission of the protons. Consequently, it seems likely that the elastically scattered protons are due to diffraction scattering. If one assumes some nuclear model, it is possible to calculate the cross section for the diffraction scattering. Bethe[18] derives the following result for the differential diffraction scattering cross section.

$$\sigma(\theta)\, d\Omega = \frac{\lambda\!\!\!^{-2}}{4} \left| \sum_{\ell} (2\ell+1)(\beta_\ell - 1) P_\ell(\theta) \right|^2 d\Omega$$

$\sigma(\theta)$ = cross section per steradian at angle θ

$\lambda\!\!\!^{-}$ = wave length of scattered proton

$P_\ell(\theta)$ = Legendre polynomial of order ℓ

is defined by the following fact; that $1 - |\beta_\ell|^2$ is the sticking probability of protons of angular momentum ℓ. In order to calculate $\sigma(\pi/2)$ we use a sticking probability of unity so that $\beta_\ell = 0$. This is undoubtedly a good approximation at 32 Mev. To make the calculation the sum over all ℓ has to be taken. However, an approximate result can be obtained by summing only over those values of ℓ for which $\ell \leq \frac{R}{\lambda\!\!\!^{-}}$. R = radius of Al^{27} nucleus. Values of $\ell > \frac{R}{\lambda\!\!\!^{-}}$ will not contribute much to the scattering because protons with such high angular momenta do not approach sufficiently close to the nucleus to feel the nuclear potential.

We take $R = 1.35\, A^{1/3}\, 10^{-13}$ cm.

$= 4.05 \times 10^{-13}$ cm for Al^{27}.

and

$$\lambda\!\!\!^{-2} = \frac{\hbar^2}{p^2} = \frac{\hbar^2}{2ME}$$

using non-relativistic relations.

If E is measured in Mev, we can write

$$\lambda\!\!\!^{-2} = \frac{\frac{\hbar^2}{mc^2}}{4\,\frac{ME}{2mc^2}} = \frac{\frac{\hbar^2}{m^2c^2}\cdot m}{4M\,\frac{E_{MeV}}{2mc^2}},$$

m = electron mass

$\frac{\hbar}{mc}$ = Compton wave length of electron = 3.8×10^{-11} cm

then,

$$\lambda\!\!\!^{-2} = \frac{(3.84)^2 \times 10^{-22}}{(1840)(4)(30.4)} \simeq 0.64 \times 10^{-26}\ \text{cm}^{-2}$$

$$\lambda\!\!\!^{-} = 0.8 \times 10^{-13}\ \text{cm}$$

$$l_{max} = \frac{R}{\lambda\!\!\!^{-}} = 5$$

Thus, taking the first five terms in the sum, we obtain for the theoretical cross section:

$$\sigma(\tfrac{\pi}{2}) = 5.5 \times 10^{-27}\ \text{cm}^2/\text{steradian}$$

The experimentally observed cross section is:

$$\sigma(96°) = 4.1 \times 10^{-27}\ \text{cm}^2/\text{steradian}$$

This agreement is probably better than we should expect from the crude model used. However, it indicates that it is not an unreasonable explanation of the elastic peak.

It is possible to use the aluminum distribution to find the variation of level density in aluminum as a function of the excitation

energy. I repeat here equation I-1 to which further reference will be made.

$$I(\varepsilon)\,d\varepsilon = K\varepsilon\, w_R(E)\,\sigma_c(E_0,\varepsilon)\,d\varepsilon$$

The density of levels at excitation E, $W_R(E)$, can be calculated when some nuclear model is assumed. This calculation must necessarily be done on some statistical basis since the many body problem involved in doing an exact calculation would be mathematically unfeasible. One might expect that statistical considerations would become fruitful where there are many ways in which a given excitation could be achieved. This requires that the excitation be shared by many nucleons. Clearly, this condition is more nearly satisfied the heavier the nucleus and the higher the excitation. At excitations of about 30 Mev, it seems likely that even as light a nucleus as aluminum can be treated by these methods.

Several investigators(3), (19) using different nuclear models, have calculated $W_R(E)$. The results of these calculations are almost identical, independently of the model used. Perhaps the most general approach has been that of Weisskopf(3) who finds the same result using two quite different methods. One method consists in counting up the number of proper oscillations $\mathcal{L}(\nu)$ of the nucleons under consideration with frequencies less than ν and setting the energy $E = T\mathcal{L}(\nu)$. Here T is the "temperature" of the nucleus*. This enables him to find

---

*The concept of nuclear temperature is introduced as follows. Define the entropy of a nucleus as $S(E) = \ln W_R(E)$. This is equivalent to the usual definition since $W_R(E)$ is proportional to the number of ways in which a state of energy E can be excited and consequently to the probability of the state. The Boltzman constant k is left out since T is defined in energy units. Then the temperature T is defined by the usual thermodynamic relation $\frac{ds}{dE} = \frac{1}{T}$.

the functional relationship between E and T from which $W_R(E)$ can be deduced as described in the footnote. The other method used a degenerate Fermi gas as the nuclear model. This is a reasonable model as long as the excitation is small compared with the total kinetic energy in the ground state of the nucleus. As long as this condition is met, the degeneracy parameter is large. Both methods lead to $E \propto T^2$, (this is a well known result for the excitation energy of an electron gas in a metal), and consequently to $\omega_R(E) = C e^{A(E)^{1/2}}$. Both C and A are constants which are not evaluated by these considerations. If we use this result for $W_R(E)$, we may write equation I-1 as follows.

$$I(\varepsilon)\,d\varepsilon = K' \varepsilon\, \sigma_c(E_0, \varepsilon)\, e^{A(E)^{1/2}}$$

or

$$\ln \frac{I(\varepsilon)}{\varepsilon\, \sigma_c(E_0, \varepsilon)} = A E^{1/2} + B$$

Thus, plotting $\ln \frac{I(\varepsilon)}{\varepsilon\, \sigma_c(E_0, \varepsilon)}$ vs. $E^{1/2}$ enables us to find A from the slope of the line. Here $E = 29.4 - \varepsilon$. 29.4 Mev is the energy of the bombarding proton in the center of mass system. However, this neglects the fact that not all the protons measured come from the $Al^{27}(p,p)Al^{27}$ reaction. If the energy of the proton is below about 18 Mev, the Al is left sufficiently excited to emit an additional particle. A glance at the distribution shows that almost all of the protons do emerge with less than 18 Mev. Consequently, multiple reactions are the rule rather than the exception. Thus, most of the protons are emitted from reactions such as $Al^{27}(p,2p)Mg^{26}$ or $Al^{27}(p,np)Al^{26}$. To take this into account, one must know what fraction of the protons

emerge directly from the Si^{28} and what fraction follow either a neutron or a proton in one of the above reactions. This can be estimated as follows. The total probability of emitting a particle is given by

$$\int_{0}^{E_0 - E_b} I(\varepsilon)\,d\varepsilon$$

where E_0 = excitation of the nucleus

E_b = binding energy of the particle under consideration.

It is seen that the total probability of emitting a particular particle from a given excited state depends only on the binding energy of this particle. A neutron is bound to Si^{28} by 16 Mev, a proton by 11 Mev. However, the proton has to contend with the Coulomb barrier which acts like an additional binding and is about 4 Mev for Si^{28}. Thus, a proton and a neutron are about equally likely to emerge from Si^{28}. By analyzing the binding energies involved in all the possible products of the two multiple reactions discussed above, we can estimate that about half of the protons emerge directly from the Si^{28} and about half follow either a neutron or a proton in some multiple reaction. We now ask, what would be the energy distribution of the protons which follow either a proton or a nuetron. We shall do the calculation for the second proton in the reaction $Al^{27}(p,2p)Mg^{26}$. For the reasons mentioned above, the result would be substantially the same for the second protons in the $Al^{27}(p,np)Al^{26}$ reaction. Let the distribution of the second protons be given by

$$I(\varepsilon')\,d\varepsilon' = K\varepsilon' e^{A(E-\varepsilon')^{1/2}}\,\sigma_c(\varepsilon')\,d\varepsilon'$$

$E' = \mathcal{E}'$ = excitation of the Mg^{26} after emission of the second proton and E' is given by

$$E' = 29.4 - E_b - \mathcal{E}$$

where E_b = binding energy of a proton to Al^{27}. This must now be multiplied by the probability of the first proton being emitted with an energy $\mathcal{E}$ and integrated over all $\mathcal{E}$ for which $\mathcal{E}'$ is possible.

Thus:

$$I(\mathcal{E}')\,d\mathcal{E}' = K\mathcal{E}'\sigma_c(\mathcal{E}')\int_0^{29.4-E_b-\mathcal{E}'} \mathcal{E}\sigma_c(\mathcal{E})\,e^{A(29.4-E_b-\mathcal{E}'-\mathcal{E})^{1/2}}\,e^{A(29.4-\mathcal{E})^{1/2}}\,d\mathcal{E}$$

No method was found for doing this integral analytically. It was done numerically for the following values of $\mathcal{E}'$: 0, 3, 6, 9, 12, 15, 18 and 21 Mev for values of A = 3.6 $Mev^{-1/2}$ and A = 3.0 $Mev^{-1/2}$*. The resulting distribution was normalized so that it contained half of the observed protons. This was then added to the distribution expected for the first proton assuming the same value of A. The smooth curve (Fig. V-1) is calculated for A = 3.6 and the dashed curve for A = 3.0 . There seems to be a qualitative agreement between the experimental and calculated distributions for energies below 12 Mev. This corresponds to an excitation of the aluminum of about 15 Mev. Thus, the evidence seems to be that at excitations above 15 Mev the density of levels increases quite rapidly and possibly exponentially.

---

*The value of A calculated directly from the data and neglecting multiple reaction is 3.8 $Mev^{-1/2}$. It is seen that the correction for the multiple reaction protons does not change the value of A very greatly. This is because the distribution of these protons is not greatly different from the distribution of the protons which come directly from the Si^{28} .

The much slower decrease of the experimental curve than the calculated one above 12 Mev indicates that for excitations below 15 Mev the level density changes much more slowly than the exponential form chosen in the calculations. Weisskopf[3] estimates A = 3.1 for light nuclei. Bethe[10] gives $\left(\frac{M}{2.2}\right)^{1/2}$, M = mass number. This gives A = 3.5 $\text{Mev}^{-1/2}$ for Al.

One can estimate the absolute level density at any excitation from Eqn. I-1, by using the relative values of $I(\mathcal{E})$ as given in Fig. V-1 and assuming a value of $W_R(E)$ at some energy. Using the known levels[17] to get the average density for the first few Mev, one arrives at a level distance of 10 KV at 20 Mev. This level distance is considerably larger than one would obtain from the statistical models of the nucleus which are used by Weisskopf and Bethe. The reason is, obviously, that the level density for the first 15 Mev changes much more slowly than the theories predict. However, the application of these statistical considerations to as light an element as aluminum at low excitations certainly seems unwarranted.

VI. ACKNOWLEDGMENTS

I wish to express my gratitude to Professors A. C. Helmholtz and W. K. H. Panofsky for their continued interest and guidance during this work. I am indebted to the Linear Accelerator crew under the direction of Mr. S. Lissauer for their complete cooperation at all times and to Mr. L. Aamodt for use of the integrator. Finally, it is a great pleasure to thank Dr. C. Levinthal and Dr. E. A. Martinelli, whose aid and advice contributed materially to all phases of this work.

VII. REFERENCES

(1) W. F. Hornyak and T. Lauritsen, Rev. Mod. Phys. 20, 191 (1948)

(2) W. W. Buechner, E. N. Strait, A. Sperduto, and R. Malm, Phys. Rev. 76, 1543 (1949)

(3) V. Weisskopf, Phys. Rev. 52, 295 (1937)

(4) L. G. Elliot, M. Deutsch, and A. Roberts, Phys. Rev. 63, 386 (1943)

(5) Kai Siegbahn, Phys. Rev. 70, 127 (1946)

(6) J. W. M. DuMond, Rev. Sci. Inst. 18, 626 (1947)

(7) R. L. Walker and B. D. McDaniel, Phys. Rev. 74 (1948)

(8) H. H. Goldsmith, H. W. Ibsen, and B. T. Feld, Rev. Mod. Phys. 19, 259 (1947)

(9) L. R. Hafstad, N. P. Heydenburg, and M. A. Tuve, Phys. Rev. 50, 504 (1936)

(10) H. W. Fulbright and R. R. Bush, Phys. Rev. 74, 1323 (1948)

(11) N. Bohr, Nature 137, 344 (1936)

(12) R. Serber, Phys. Rev. 72, 1114 (1947)

(13) R. R. Wilson, Phys. Rev. 71, 385 (1947)

(14) W. Aron, B. Hoffman, and F. Williams, UCRL 121 Revised, Nov. 1948

(15) W. M. Gibson, Proc. Phys. Soc., A, 62, 586 (1949)

(16) W. K. H. Panofsky and R. Phillips, Phys. Rev. 74, 1732 (1948)

(17) R. H. Dicke and J. Marshall, Jr., Phys. Rev. 63, 86 (1943)

(18) H. A. Bethe, Phys. Rev. 57, 1125 (1940)

(19) H. A. Bethe, Phys. Rev. 50, 332 (1936)