UNIVERSITY OF CALIFORNIA
Radiation Laboratory

Routing Sheet
Do not remove this page

INDEX NO. UCRL-627
This document contains ____ pages
and ____ plates of figures.
This is copy 2 of ____ . Series ____ .

Issued to INFORMATION DIVISION
RADIATION LABORATORY
UNIVERSITY OF CALIFORNIA
BERKELEY, CALIFORNIA

UNCLASSIFIED
Classification

Each person who receives this document must sign the cover sheet in the space below. Please return the document to the Information Division. Do not send it to the next person on the list.

Route to	Noted by	Date	Route to	Noted by	Date
L. Henrich	LH	4/20			
E. Lofgren	EL				
J. DeJuren	JDJ				
Barkas	[illegible]				
D Burleigh			MAY 25 1951		

DISCLAIMER

This document was prepared as an account of work sponsored by the United States Government. While this document is believed to contain correct information, neither the United States Government nor any agency thereof, nor the Regents of the University of California, nor any of their employees, makes any warranty, express or implied, or assumes any legal responsibility for the accuracy, completeness, or usefulness of any information, apparatus, product, or process disclosed, or represents that its use would not infringe privately owned rights. Reference herein to any specific commercial product, process, or service by its trade name, trademark, manufacturer, or otherwise, does not necessarily constitute or imply its endorsement, recommendation, or favoring by the United States Government or any agency thereof, or the Regents of the University of California. The views and opinions of authors expressed herein do not necessarily state or reflect those of the United States Government or any agency thereof or the Regents of the University of California.

Copy 2

UCRL 627

Unclassified Distribution

UNIVERSITY OF CALIFORNIA

Radiation Laboratory

Contract No. W-7405-eng-48

PHYSICS DIVISION QUARTERLY REPORT

November, and December, 1949 and January, 1950

February 7, 1950

Some of the results reported in this document may be of a preliminary or incomplete nature. It is the request of the Radiation Laboratory that the document not be circulated off the project nor the results quoted without permission.

****

Berkeley, California

INSTALLATION:	No. Copies
Argonne National Laboratory	8
Armed Forces Special Weapons Project	1
Atomic Energy Commission, Washington	2
Battelle Memorial Institute	1
Brookhaven National Laboratory	8
Bureau of Medicine and Surgery	1
Bureau of Ships	1
Carbide and Carbon Chemicals Corp. (K-25)	4
Carbide and Carbon Chemicals Corp. (Y-12)	4
Chicago Operations Office	1
Cleveland Area Office	1
Columbia University (Dunning)	2
Columbia University (Failla)	1
Dow Chemical Company	1
General Electric Company, Richland	6
Idaho Operations Office	1
Iowa State College	2
Kansas City	1
Kellex Corporation	2
Knolls Atomic Power Laboratory	4
Los Alamos	3
Mallinckrodt Chemical Works	1
Massachusetts Institute of Technology (Gaudin)	1
Massachusetts Institute of Technology (Kaufmann)	1
Mound Laboratory	3
National Advisory Committee for Aeronautics	2
National Bureau of Standards	2
Naval Radiological Defense Laboratory	2
NEPA Project	2
New Brunswick Laboratory	1
New York Operations Office	3
North American Aviation, Inc.	1
Oak Ridge National Laboratory	8
Patent Advisor, Washington	1
Rand Corporation	1
Sandia Base	1
Sylvania Electric Products, Inc.	1
Technical Information Branch, ORE	15
U.S. Public Health Service	1
UCLA Medical Research Laboratory (Warren)	1
University of California Radiation Laboratory	5
University of Rochester	2
University of Washington	1
Western Reserve University (Friedell)	2
Westinghouse	4
Total	117

INFORMATION DIVISION
Radiation Laboratory
University of California
Berkeley, California

TABLE OF CONTENTS

	Page
I GENERAL PHYSICS RESEARCH	
Cloud Chamber Program	4
Film Program	15
Development of Electronic Equipment for High Energy Pair Spectrometer	16
Measurements of Total Cross Sections	17
Particle Spectrometer	18
Film Track Study of the External Neutron Field	19
High Energy Photons	20
Proton Elastic Scattering	21
P-p Scattering at 340 Mev	22
Measurement of the Cyclotron Duty Cycle	23
Short Life Po Isomers	24
Scintillation Counter Development	25
Production Cross Sections for Positive and Negative π^- Mesons by 345 Mev Protons on Carbon at 90° to the Beam	26
Capture of Negative π Mesons in Hydrogen	27
Proton-Proton Scattering Near 30 Mev	28
Production of Mesons by Proton Bombardment of Liquid Hydrogen	29
Synchrotron Studies	30
Theoretical Physics	32
II ACCELERATOR OPERATION AND DEVELOPMENT	
184-inch Cyclotron	33
Overhaul of the 60-inch Cyclotron	35
Synchrotron	54
Linear Accelerator and Van de Graaff Machines	57
Bevatron Development	58

I GENERAL PHYSICS RESEARCH

1. Cloud Chamber Program

Wilson M. Powell

Scattering of Deuterons by 90 Mev Neutrons. The theory of neutron collisions with deuterons predicts the possibility of elastic collisions at neutron energies of 90 Mev, and gives a probability that elastically scattered deuterons will be sent in a forward direction which is quite large. The theory also shows that a neutron can hit the neutron in a deuterium nucleus directly in such a way that the remaining proton is left with the momentum that it possessed inside the nucleus before the collision. As a result the remaining proton will have an energy not much above 5 Mev and a velocity rather uniform in angular distribution in the laboratory system. There will be some protons going backwards in this low energy group. Another type of collision results in the proton being knocked out of the deuterium nucleus by more or less direct collision. In these cases the protons should show an angular distribution somewhat similar to that found in n-p scattering but without the very sharp peak at zero degrees and with no peak at all around 80 degrees because of the competing elastic collisions. Many other theoretical predictions can be checked by an adequate experiment and the full theoretical import of this work which is being pursued at this laboratory by Geoffrey Chew and others will be discussed elsewhere. One of the most interesting results is the indication of the n-n cross section given by the relative numbers of backward protons.

Apparatus. The large 22 inch diameter Wilson Cloud Chamber[1] was filled with deuterium gas with heavy water for the vapor, and placed in the 90 Mev neutron beam produced by 190 Mev deuterons striking a half-inch beryllium target. The spectrum of the neutrons was the same as that measured by us earlier[2]. The neutron beam was collimated by the hole in the concrete shielding so that it was 2-3/4 inches wide and 3/4 inch high. A five mil thick copper window admitted the beam into the chamber, and the beam passed out of the rear of the chamber through a similar window. The center of the cloud chamber was 620 inches from the cyclotron target and it was necessary to run the beam at about a third to a half of full intensity for satisfactory pictures.

The experiment as originally planned was to use a 1/8 inch thick glass plate through which the protons and deuteron would go and identify themselves as in the experiment with a carbon target[3], and extensive calculations of solid angles were made taking into account the glass plate. Several improvements in technique made it unnecessary to use the glass plate, part of which had to be in the neutron beam.

The pantagraph type chamber measures only 3-1/2 inches from the bottom of the top glass to the top of the movable disk forming the bottom of the chamber. Originally this was covered with black velvet which scattered light into the cameras so badly that only 1-1/8 inches could be illuminated at the center of the chamber. The experiment mentioned above[3] was performed under these limitations. A marked improvement in background was achieved by coating the back of a

1/8 inch thick glass disk with black Apiezon wax and sticking it to the bottom of the chamber with bees wax. This disk was 20.5 inches in diameter and covered the bottom of the chamber completely except for the flexible rubber edges. Clearing field wires were placed two inches apart on the glass and their electrical contact assured by spots of aquadag painted at two inch intervals along the wires. These are shown in Fig. 1 along with a broad track showing streamers of droplets leaving the track first on one side and then on the opposite side further along the track. These streamers were interpreted as failure of the clearing field in the cloud chamber to go to zero before the arrival of the particle making the track. Apparently charges were left in spots on the glass causing this irregular behavior. Because of this difficulty the glass plate was abandoned and black gelatin originally used by C. T. R. Wilson was poured over the bottom of the chamber. Two cc of ordinary Knox gelatin was dissolved in 50 cc of heavy water and enough ordinary black dye was added to make the solution quite black. The chamber was kept warm while it was being filled with deuterium gas so that the gelatin would not set while evacuating the chamber. It was necessary to have the room above 70 degrees Fahrenheit for this. The heavy water gelatin bottom has such good optical properties that the lights can be set so that full intensities reached half an inch from the bottom and top of the chamber. Uniform illumination extends over 2.5 inches in a vertical direction.

The Light Source. Great care was taken to make the illumination uniform. Each light consisted of a General Electric FT422 flash tube wrapped in aluminum foil which covered the back half of the tube. The foil was held on by winding a 5-mil wolfram wire in a spiral with half-inch spacing around the tube; this wire and the aluminum foil acted as the tickler electrode. Five 4-1/2 inch diameter double convex lenses of 6 inch focal length were ground down a quarter on an inch at adjacent edges so that they could be placed with axes 4 inches apart. These were located about 6-1/2 inches from the flash tube, and cardboard baffles covered with black velvet passed between the lenses back to the flash tube so that each lens saw only 4 inches of flash tube. The beam of light was quite uniform over 2.5 inches in a vertical direction at the center of the cloud chamber. This was tested by exposing Ozalid printing paper to about 25 flashes of the light. This high contrast paper indicated that the light was uniform probably to better than 20 percent over this vertical height. The illumination at the center of the chamber was about twice as great as at the edge if it was measured along a horizontal line parallel to the light source. In order to correct this, narrow strips of black scotch tape were placed across the lights at intervals until a photoelectric measurement of the intensity of the light showed that there were no variations greater than 10 percent. With this uniform illumination it was possible to obtain excellent pictures using an f number of 8 and Eastman Linagraph Orthocromatic film.

Identification of Particles. As a result of these precautions and improvements in illumination it was possible to distinguish protons and deuterons from each other by estimating the ionization by inspection and measuring the radius of curvature. This method of identifying particles has in the past led to erroneous conclusions and the discussion following will be concerned with showing the differences between this experiment and others which are felt by us to justify our confidence in the results. First, the illumination is very uniform, second, all tracks start in the chamber along a line defined by the neutron beam.

By not counting tracks showing a dip angle greater than 30 degrees the length of the track in a well illuminated part of the chamber is adequate. Third, the timing of the chamber was monitored by photographing an oscillograph showing a pip when the chamber bottom struck a microswitch at the end of the expansion, another pip from a proportional counter in the neutron beam, and a third pip at the instant of the flashing of the lights. These three times showed a jitter of less than 0.005 seconds with the expansion being completed .01 second before the arrival of the beam and .04 second before the lights. Fourth, and most important, is the fact that for the same radius of curvature the ionization of a deuteron is four times greater than that for a proton and no other particles appear starting singly in the gas of the cloud chamber.

The greatest difficulty in distinguishing protons and deuterons by means of ionization occurs at very low energies but it is precisely in this range that the rate of change of curvature becomes sufficiently pronounced to make an incorrect identification impossible. Fig. 2 shows a 2.9 Mev proton and Fig. 3, a 3 Mev deuteron. The stopping power of the gas is approximately one quarter that of air and the multiple scattering sufficiently small so that protons and deuterons at low energies are unmistakably different in appearance. Fig. 4 shows a proton colliding with a deuteron and recoiling backwards. The radius of curvature of the deuteron track is greater than that of the proton but the obviously heavier ionization of the deuteron leaves no doubt as to which particle it is.

The forward scattered deuterons with energies above 70 Mev are incapable of being misinterpreted even if the ionization is unknown. This is due to the fact that a proton with the same radius of curvature would have 133 Mev energy and there are too few neutrons in the neutron beam with this high energy to cause any appreciable error. This fact was used as a check on our estimates of ionization. Out of 135 tracks measured, only one track was found where two observers were unable to agree. Before the experiment is finished, we hope to be able to classify those tracks upon which there is disagreement and then to be able to estimate our error due to misinterpretation more accurately than at present. However, if no further improvement were made the data would be very satisfactory from this point of view.

Preliminary Results. The neutron energy spectrum has one peak at 90 Mev and shows another group at low energies. There is a hole at 40 Mev which is a good dividing line for the data. The energy of a neutron which produces an elastically scattered deuteron is equal to $9/8 \cos^2\theta$ x (energy of the deuteron) where θ is the angle of scattering of the deuteron in the laboratory system. The summary for the deuterons given in Table I is presented so that elastically scattered deuterons from neutrons above 45 Mev can be separated from the total. The deuterons of energy below 10 Mev are tabulated separately, however, at 60 degrees, a 10 Mev deuteron can have been produced by a 45 Mev neutron and from that angle on up, some of the deuterons below 10 Mev are included with those produced by neutrons of energy greater than 45 Mev.

Table II is for protons, and in this table the protons have been separated into two groups. Here the justification for this separation is not nearly as good as in the case of the deuterons because a proton, if hit by a neutron, possesses momentum in the nucleus before being struck and also loses some energy

TABLE I

Deuterons

Angular interval	0-10°	10-20	20-30	30-40	40-50	50-60	60-70	70-80	80-90	90~
Deuterons above 10 Mev	15	25	21	20	20	24	26	4	0	
Deuterons above 10 Mev from neutrons of <45 Mev	2	6	7	7	4	0	0	0	0	
Deuterons from neutrons >45 Mev	13	19	14	13	16	24	35	44	24	
Deuterons below 10 Mev	46		58		25		80		25	3
Deuterons per steradian from neutrons >45 Mev	136	67	30.3	30.2	40	64	95.5	119.2	65.5	
Steradians over which tracks were measured. 30° max. dip angle	.0955	.283	.463	.4315	.400	.375	.367	.368	.366	
Fraction of tracks measured	1	1	1	.686	.517	.418	.372	.348	.335	

TABLE II

Protons

Angular interval	0-10°	10-20	20-30	30-40	40-50	50-60	60-70	70-80	80-90	90~
Protons above 10 Mev	37	116	143	98	59	38	23	25	2	3
Protons above 10 Mev perhaps from neutrons of less than 45 Mev	5	20	28	17	5	2	0	0	0	0
Protons from neutrons of greater than 45 Mev	32	96	115	81	54	36	26	41	9	3
Number of protons per steradian	335	339	248	187	135	96	71	111	24.6	
Angular interval	0-20	20-40	40-60	60-80	80-90	90-100	100-120	120-140	140-160	160-180
Protons below 10 Mev	20	38	30	37	7	5	7	5	5	6
Number of protons below 10 Mev per steradian						13.6	9.5	6.4	5.6	16
Fraction of tracks measured	1	.82	.46	.37	.34	.34	.37	.46	.82	1

on leaving the nucleus. Both of these properties make the relationship between the proton angle and energy and the neutron energy less definite. However, if protons are chosen on the same basis as the deuterons, then most of them will have been produced by neutrons of energy greater than 45 Mev. Some protons will fall into this group which have come from lower energy neutrons where the momentum of the proton in the nucleus will have increased the angle of departure of the proton, but the reverse can happen also. Using the factor 9/8 may be slightly better than using unity because it allows a small amount for the energy loss of the proton in leaving the nucleus. The protons which appear going in a backwards direction are very likely to have been produced by neutrons of energy greater than 45 Mev because at low energies where the cross sections become larger the deuteron is less likely to break up and there is more time during the collision for the proton to be dragged forward. For these reasons the backward protons were counted with those due to 45 Mev or higher energy neutrons. Also some of the forward slow protons, and at least a number equal to the number going backwards come from these neutrons, and these should be included in events due to these neutrons. Table II shows the proton data separated as described above.

Neutron Neutron Cross Section. The neutron deuteron total cross section is 117 millibarns[4] for the 90 Mev neutrons and the neutron proton cross section is 83 millibarns. This leaves a maximum possible neutron neutron cross section of 34 millibarns, and we would expect something considerably smaller. Table III gives a summary of all the events corrected for the limited solid angle and separated according to the description above. Table IV uses the information from Table III to get relative cross sections for the different processes. The total neutron deuteron cross section corresponds to $D+P+2P_B$. Actually this group P_L may contain events which should be included in this cross section. Also about ten percent of the total neutron-deuteron cross section comes from events where the deuteron is scattered between 85 and 90 degrees and these events are not included in Table IV because the range of the corresponding deuterons is too small. All these things tend to make the number of events corresponding to the total neutron deuteron cross section too small. The neutron neutron cross section, because of this error will be too large, and the figure given for this corresponding to $2P_B$ and equal to 11.4 millibarns is an upper limit for the neutron neutron cross section.

Errors. This report is very preliminary and a complete discussion of errors is impossible at this time. The templates used for measuring curvatures consist of curves drawn with radii five percent apart. In most cases the errors are less than ± five percent in momentum. Angles can be measured to ± two degrees. The biggest error in these data arises from the fact that it has not been checked by a second measurement. In a group of 132 tracks which were rechecked, six showed an error greater than ten percent in radius, four showed an error of not more than five degrees in angle, seven showed error in identification (i.e., a proton was mistakenly labelled as a deuteron), and eight high energy protons were omitted altogether. When an error is found, it is rechecked by a third party. In all cases but one there was agreement between the people measuring the tracks. In one case only it was impossible to determine whether the particle was a proton or a deuteron. This recheck was made on the earliest data and there is good reason to believe that both data and measurement of the data have improved considerably.

TABLE III

Letter	Description	Number of Events Corrected for Limited Solid Angle
D	Deuterons due to neutrons of energy greater than 45 Mev	446.0
D_L	Deuterons due to neutrons of energy less than 45 Mev	293.2
P	Protons probably due to neutrons of energy greater than 45 Mev in forward direction	766.8
P_B	Protons backward	65.6
P_T	$P + 2P_B$	898.0
P_L	Protons probably due to neutrons of energy less than 45 Mev	203.4

TABLE IV

Description	Number of Events Corrected for Limited Solid Angle	Cross Section in Millibarns	Percent of Total No of Events
$D+P+2P_B$	1344	117	100
$2P_B$	131.2	11.4	9.7
D	446	38.8	33.2
$P+2P_B$	898	78.2	66.6
D_L	293.2		21.8
P_L	203.4		15.1

The Energy and Angular Distribution of the Electrons Produced When the Synchrotron Beam Strikes a 1/2 inch thick Piece of Lead. In the study of cosmic ray phenomena, diffusion equations have been set up to describe the course of the cascade shower that is produced when either an electron or gamma-ray is incident on matter. In the earlier forms of the theory ionization loss was neglected and the asymptotic cross sections for radiation and pair production were included; these are good approximations as long as the shower is initiated by a very high energy particle or photon. For a bibliography and summary of the approximations made by various authors, see the recent paper by Snyder[5].

The shower theory predicts a number of quantities that may be measured experimentally. They include the numbers, energies, and angular distributions of the electrons and photons as a function of thickness of material. A few calculations have also been made on the fluctuations in the number of particles.

Counter experiments to determine the counting rate as a function of thickness of material are a familiar type of cosmic ray experiment. The transition curve that is obtained rises rapidly to a maximum and then decreases more slowly as the thickness of material increases. These curves are in qualitative agreement with the theory but suffer from the fact that to make a comparison the theoretical curves must be averaged over the energy spectrum of the initiating electrons or gamma rays. This is quite difficult since the primary energy spectrum is virtually unknown. Other limitations of the counter experiments result from the fact that they are subject to various geometrical corrections, difficult to estimate, as well as the difficulty of separating out the hard component.

A more direct comparison of theory with experiment may be obtained from cloud chamber data. From a study of fifty showers, Hazen[6] has been able to compare with the theory the number of particles at the maximum of the shower as a function of the total number of particles under eight 0.7 cm lead plates. Nassor and Hazen[7] have also determined the shape of the shower curve but in addition they have measured the energy spectrum of the electrons at the maximum as well as the fluctuations. Their results are certainly consistent with the theory but the experiments are unsatisfactory in two ways; (a) the energy of the incident electron is never experimentally determined and (b) the number of showers observed is limited.

When the synchrotron[8] began to operate, the systematic measurement of these quantities predicted by cascade theory became possible. Kenney and Blocker[9] have determined the shape of the shower curve for lead, copper, aluminum, and carbon. They have measured the current from an ionization chamber as a function of thickness of material and have obtained the transition curves with extreme accuracy. We have set out to measure the energy spectrum of the electrons at the maximum of the shower in lead; i.e., at the maximum as determined by Kenney and Blocker which occurs under approximately 1/2 in. of lead.

A cloud chamber, described in a previous paper[10], in a magnetic field of 1800 gauss was located in the x-ray beam of the Berkeley synchrotron and 88-1/2 feet from its target. Two collimators were used. The first was a 1/8 in. x 3/8 in. horizontal slot located 5 feet from the target and the second was a 1/16 in. x 1 in. slot 30 feet from the target and at the same vertical height as the center of the illuminated region of the cloud chamber. The x-ray beam traversed

the 3/4 inch quartz wall of the synchrotron donut, 88-1/2 feet of air and the 1/4 inch glass wall of the cloud chamber before impinging on a half inch lead plate inside the chamber. (See Fig. 5)

The energy and angular distributions of the electrons that emerge from the half inch thick lead plate have been measured by reprojection[10]. Besides the radius of curvature ρ, two angles, α and β, were measured. α is the dip angle or the angle that the start of the track makes with the horizontal. β is the angle that the start of the track makes with the plane defined by the beam direction and the vertical. The energy of the electron is then given by $E = 300\ H\rho \cos\alpha$ and the scatter angle $\theta = \cos^{-1} \cos\alpha \cos\beta$.

The photographs measured were selected on the basis of their quality and population. For example, a photograph that contained fifteen tracks was easy to measure whereas one having twenty-five was measurable only in cases where the photography was exceptional. Each photograph represented, of course, a single pulse from the synchrotron and indeed a single pulse of extremely low intensity. The tracks have in all cases been selected and measured by two independent observers and from their reproducibility we believe that the errors in the angles are about $\pm 2^{\circ}$ and in the radii of curvature $\pm$ 5 percent.

The magnitude of the magnetic field (1800) gauss permitted the accurate measurement of electrons in the energy range from 3 to 150 Mev. Multiple scattering by the gas (a mixture of argon and helium) of the chamber also prohibited the measurement of the lower energy electrons. All tracks in this energy range were measured if their dip angles were less than 45°; a geometrical correction, based on the assumption of azimuthal symmetry, was made for the omitted tracks.

$$\frac{\pi}{2 \sin^{-1}\left(\frac{\sin 45^{\circ}}{\sin \theta}\right)}$$

Since the scatter angles of the electrons result from their Coulomb scattering in the lead, they are a strong function of the energies of the electrons. Thus, for example, the geometrical correction mentioned above is necessary only below 40 Mev and is really important only below 20 Mev. Another result of this energy dependence is that it has effectively extended the upper limit of the energies that could be measured, for the high energy electrons come out from the lead plate essentially in the forward direction and traverse the diameter of the cloud chamber giving about 30 cm of track on which to make an otherwise very difficult curvature measurement.

Fig. 6 shows a histogram of the measured energy distribtuion. This graph is based on the measurement of 763 tracks and the standard deviations are based only on the number of tracks measured. The smooth curve was calculated by Walter Aron for a 1/E spectrum of γ-rays and using a value of the radiation length of 0.782 cm Pb determined from the data of Kenney and Blocker[9]. The agreement is certainly satisfactory for results as preliminary as these. The marked disagreement in the first point is understandable. We cannot measure tracks having scatter angles larger than about 65°, and since about half the electrons in this group would be expected to have scatter angles larger than

this, the discrepancy is not surprising.

Fig. 7 is a plot of the half-angle (the angle within which half of the electrons in a given energy interval lie) versus energy in the range from ten to eighty Mev. No point represents less than twenty tracks. These experimental points are compared with the results of the calculations of Roberg and Nordheim[11]. These calculations take into account the Coulomb scattering of the observed electron as well as that of its ancesors.

References

[1] W. M. Powell, Rev. Sci. Instr. 20, 402 (1949)
[2] Brueckner, Hartsough, Hayward, Powell, Phys. Rev. 75, 555 (1949) and Hadley, Kelly, Leith, Segrè, Wiegand, and York, Phys. Rev. 75, 351 (1949)
[3] Brueckner, Powell, Phys. Rev. 75, 1274 (1949)
[4] Cook, McMillan, Peterson, Sewell, Phys. Rev. 75, 7 (1949)
[5] H. S. Snyder, Phys. Rev., 76 1563 (1949)
[6] W. E. Hazen, Phys. Rev. 66, 254 (1944)
[7] S. Nassor and W. E. Hazen, Phys. Rev. 69, 298 (1946)
[8] E. McMillan and J. M. Peterson, Science 109, 438A (1949)
[9] W. Blocker, R. Kenney, W. K. H. Panofsky (private communication)
[10] K. Brueckner, W. Harsourgh, E. Hayward, and W. M. Powell, Phys. Rev. 75 555 (1949)
[11] J. Roberg and L. W. Nordheim, Phys. Rev. 75, 444 (1949)

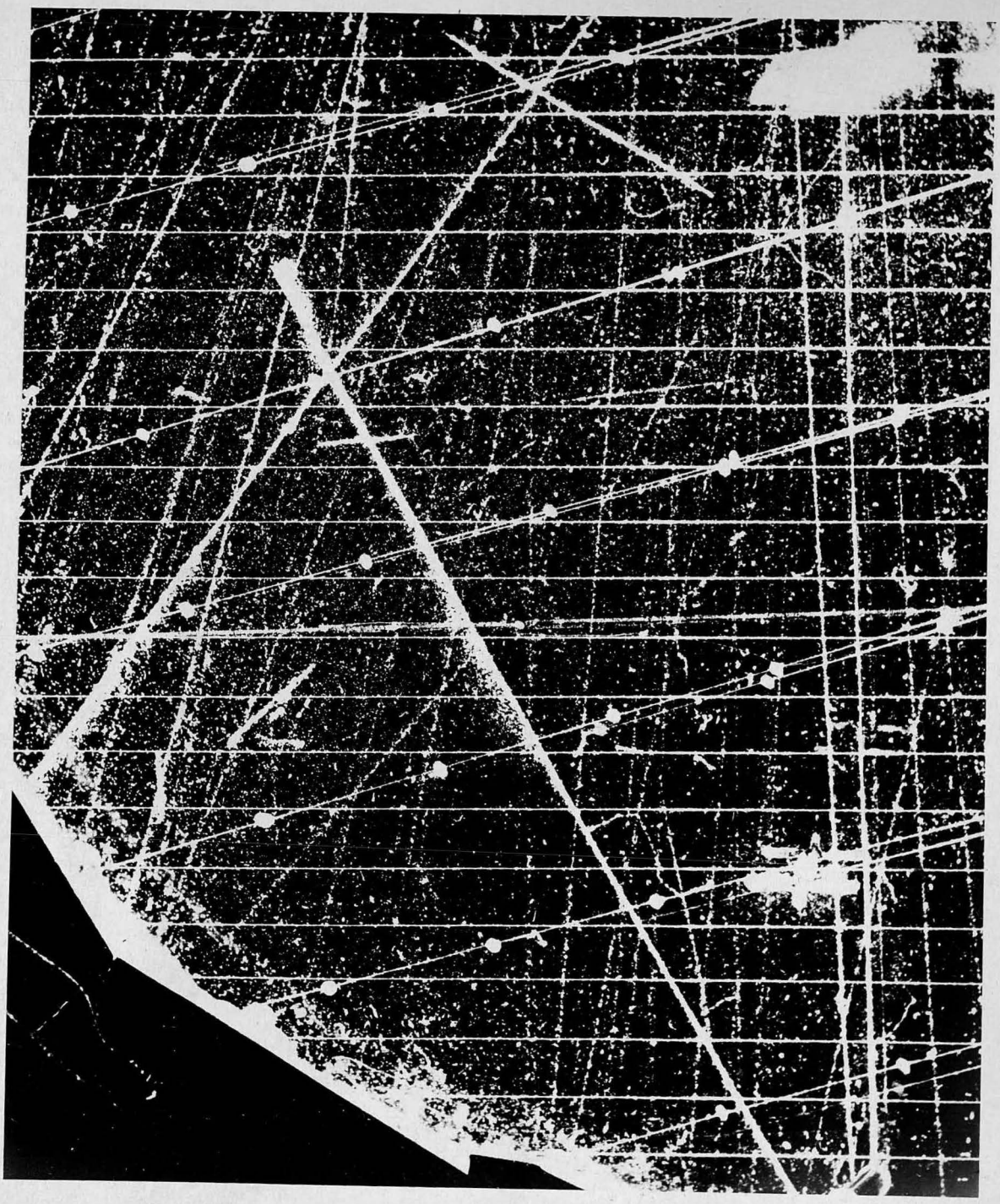

THE TWO HEAVIEST TRACKS SHOW RIBBONS OF DROPLETS STREAMING AWAY FROM THE HEAVY CENTRAL CORE OF THE TRACK. THIS IS DUE TO CHARGES ON THE GLASS BOTTOM REMAINING AFTER THE WIRES ON THE GLASS BOTTOM HAVE BEEN GROUNDED. THE WIRES ON THE GLASS BOTTOM APPEAR DOUBLE BECAUSE ONE OF THE LIGHTS FLASHED ACCIDENTALLY BEFORE THE EXPANSION TOOK PLACE. AS A RESULT OF THIS, THE TRACKS WERE ILLUMINATED BY ONLY ONE LIGHT.

FIG. 1

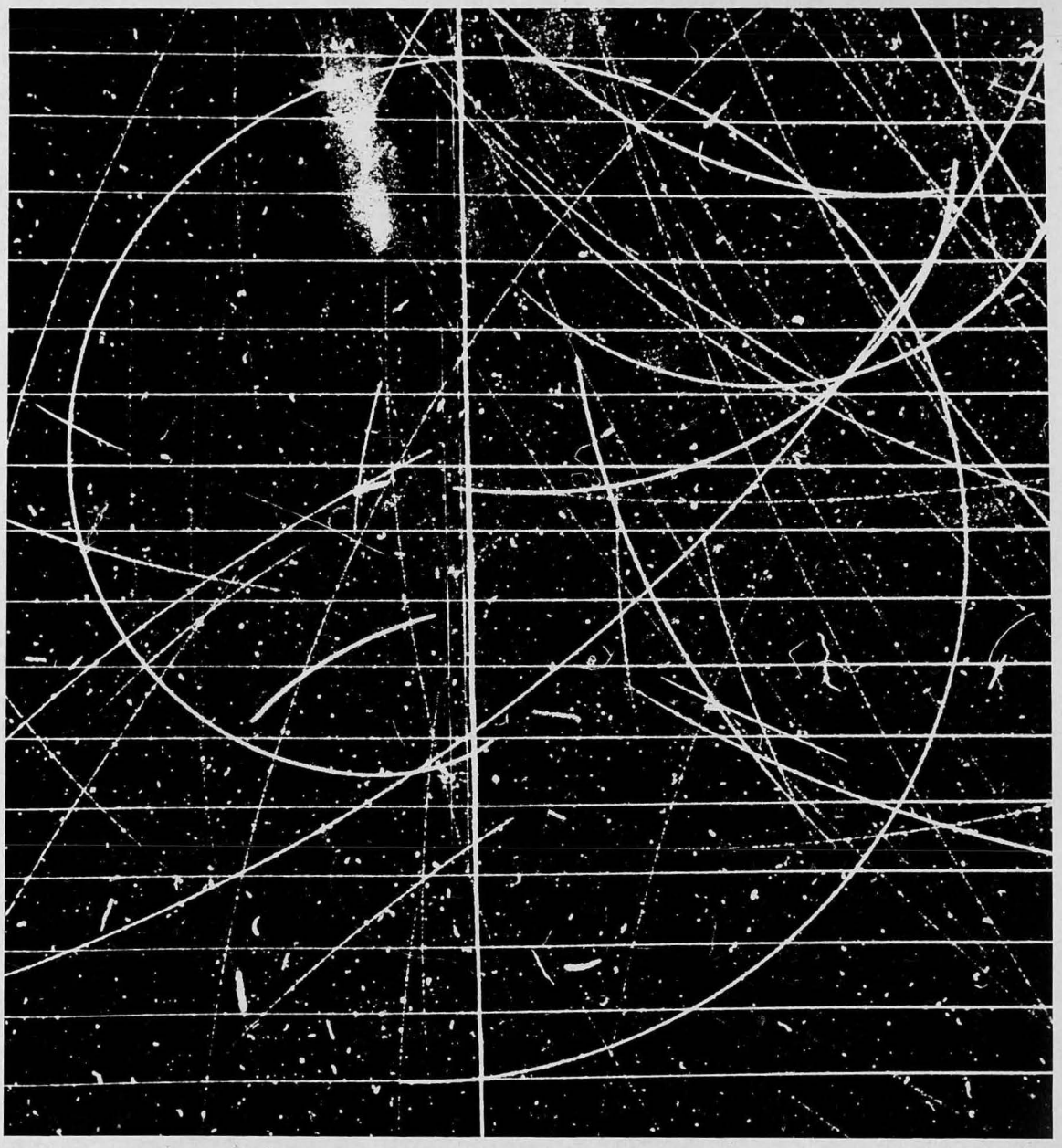

A 2.9 MEV PROTON ENDING IN THE GAS OF THE CHAMBER.

FIG. 2

A 3 MEV DEUTERON ENDING IN THE GAS OF THE CHAMBER

FIG. 3

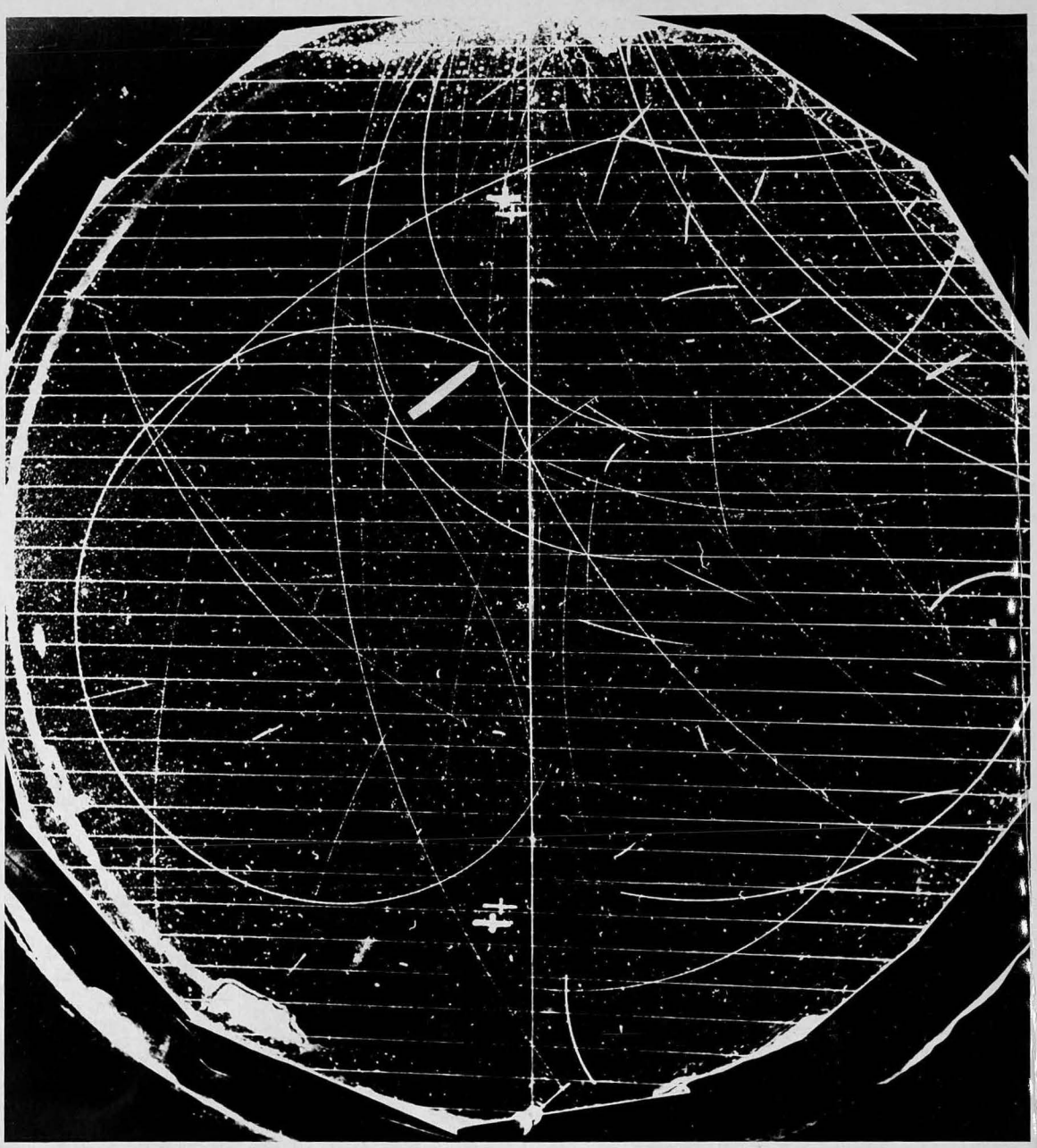

A 45 MEV PROTON COLLIDES WITH A DEUTERON AT THE POINT INDICATED BY THE ARROW AND RECOILS TO THE LEFT TURNING THROUGH 270 DEGREES BEFORE LEAVING THE ILLUMINATED REGION OF THE CHAMBER.

FIG. 4

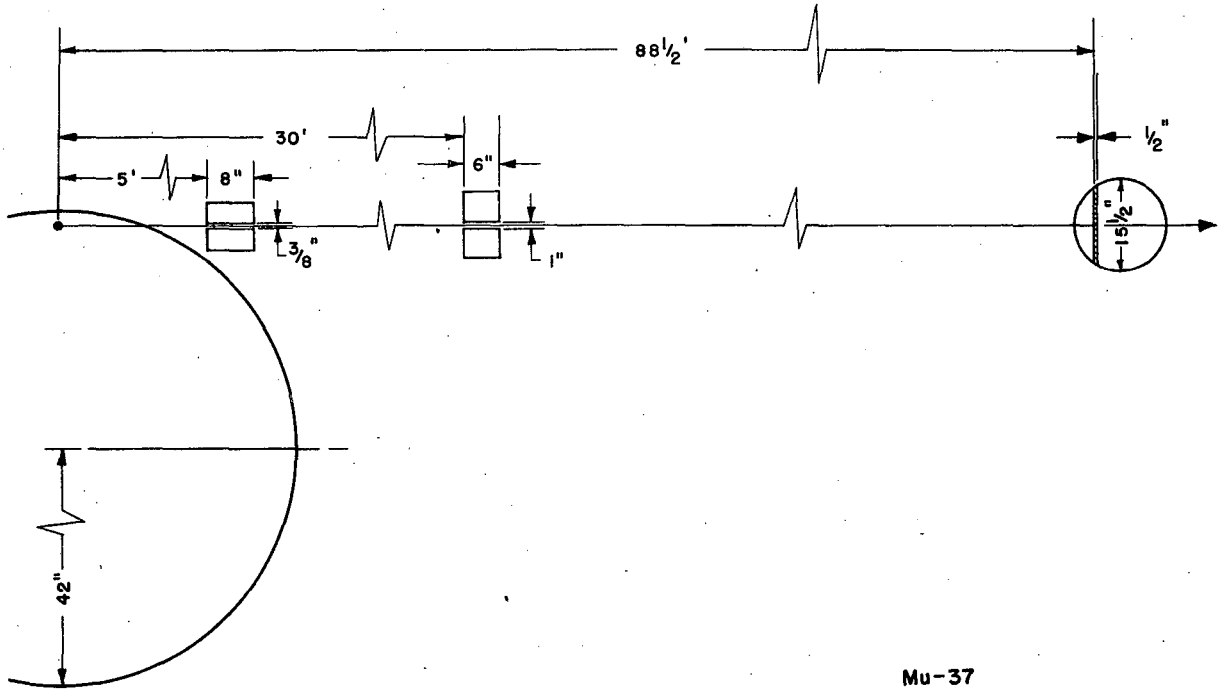

Mu-37

FIGURE 5

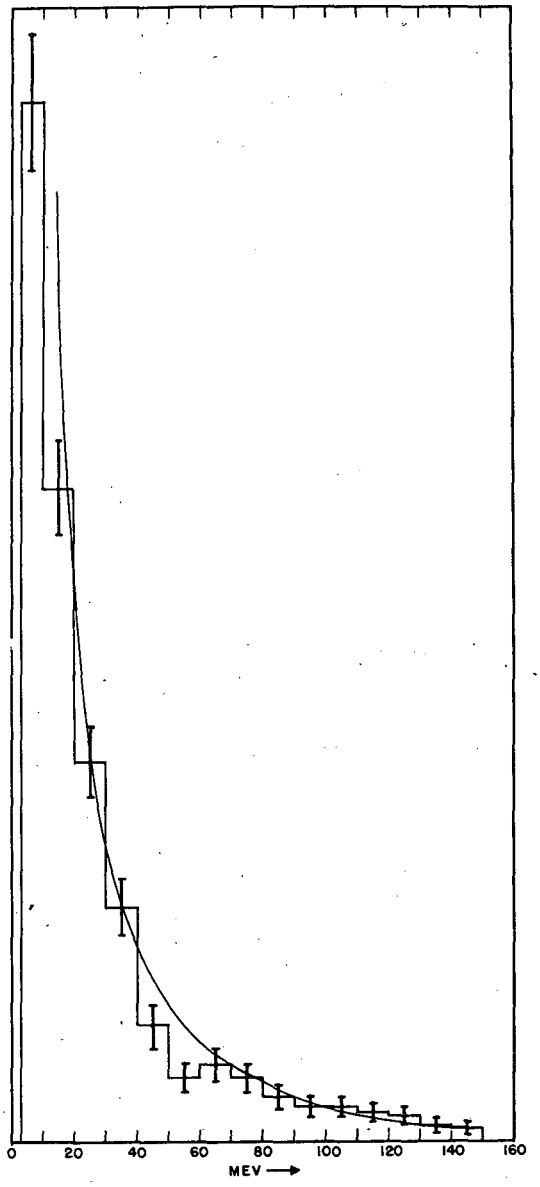

FIG. 6

Mu-39

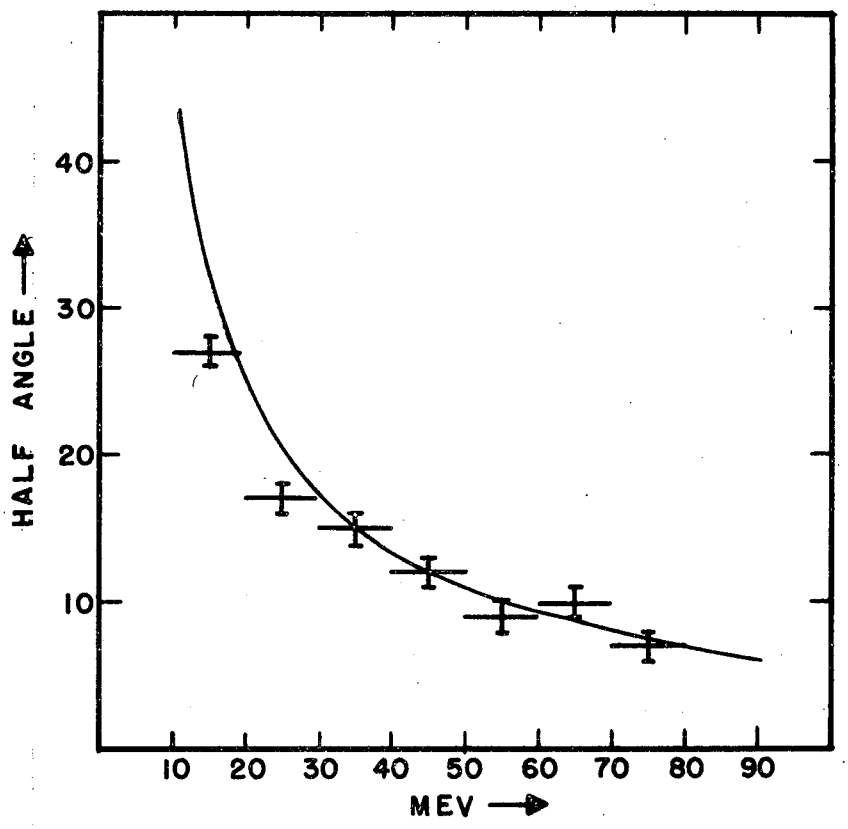

Mu-38

FIG. 7

2. Film Program

Eugene Gardner, Walter H. Barkas*, F. M. Smith and Hugh Bradner

A review of the work on mesons produced by the cyclotron has been written and is being distributed under the report number UCRL-577.

* Office of Naval Research, San Francisco.

3. Development of Electronic Equipment for High Energy Pair Spectrometer

Dwight Dixon, and Leland Neher

Introduction. The specifications for a high energy pair spectrometer to be used for neutral meson investigation and other experiments require fast coincidence and counting circuits. Approximately three months ago, experimental work was begun in applying the latest developments in fast acting circuits; namely, the photomultiplier-crystal counter, and the distributed amplifier. At the same time, as an aid to observing the performance of these circuits, construction was started on a high voltage oscilloscope and a pulse generator. Tentative plans called for resolution times not greater than 10^{-8} seconds, and for a coincidence counting rate of 10^{6} counts per second. In the following we report progress on the oscilloscope, pulse generator, coincidence circuit, and a pre-amplifier.

Oscilloscope. The oscilloscope was constructed about a DuMont K1017 high voltage cathode ray tube. A simple sweep and intensifier circuit employing a type 2050 gas tetrode, has given sweep speeds up to 2×10^{-9} seconds per centimeter of tube face, with a repetition rate up to 2000 cycles per second. The DuMont K1017 and the sweep circuits are discussed in Volume 22, page 288, of the M.I.T. Radiation Laboratory Series.

Pulse Generator. It was recently found that high voltage in the order of one to five kilovolts, will decrease the conduction time of the thyratron tubes, types 2050 and 2D21. When fired by a trigger pulse under these conditions, the current initially increases to about half value in 10^{-8} seconds; then the current increases to full value in about 3×10^{-10} seconds. To obtain this fast conduction time is essential to have a minimum of inductance in the current path internal and external to the tube. Using a type 2D21, and 50 ohm transmission line, approximately 8 peak amperes is available for short pulses.

Coincidence Circuits. The coincidence circuits require fast acting, non linear elements. At present we are testing two promising types. One is the multigrid miniature radio tube, ordinarily used for mixing high frequencies, the other, is the crystal diode. The type 6BA7 has proven satisfactory. The coincidence performance can be well predicted from the static d.c. curves. The electrostatic coupling between the two grids and the plate is small. As yet, we have not enough information on the crystal diode performance.

Pre-Amplifier. Two parallel connected 5819 photo-multiplier tubes are used to collect light from the large Lucite light pipe leading from the trans-stilbene crystal. A simple three tube pre-amplifier has been designed to couple the photo-multiplier tubes to a 125 ohm transmission line. A negative mutual inductance, tapered plate line circuit essentially as described by Ginzton et al.[1] is used. The amplifier has a gain of about two and a rise time of 3×10^{-9} sec. or slightly less. By following the design procedure outlined in the above article and by paying due attention to lead lengths and ground returns, it seems fairly easy to make distributed amplifiers which operate well.

---

[1] Ginzton et al, "Distributed Amplification," Proc. I.R.E. Vol 36, p 956-969 Aug., 1948.

4. Measurements of Total Cross Sections

James DeJuren

The bismuth fission ionization chambers were altered electronically for operation on the new linear amplifiers that have been installed in the counting area. Operating characteristics of the chambers have not changed appreciably, but noise level is higher and accidental coincidences may be worse than previously.

The cross section of wolfram was measured. Carbon was run as a check and agreed with earlier measurements. The results were.

Element	Cross Section x $10^{-24}cm^2$
Carbon	2.90 ± .009
Wolfram	2.65 ± .07
	2.55 ± .07
	- - - - - -
	2.60 ± .05 (ave.)

Measurements of total cross sections for neutrons knocked out of a 2 in. Be target by 270 Mev protons were measured with a detector placed inside the shielding and behind the igloo where the background was about six percent of the unattenuated counting rate. Five elements were measured and the estimated mean neutron detection energy is 190 Mev.

Element	Cross Section x $10^{-24}cm^2$
Carbon	.291 ± .009
Aluminum	.540 ± .028
Copper	1.14 ± .04
Tin	1.89 ± .07
Lead	2.83 ± .10

The measurements were the same as the 270 Mev neutron cross sections, within the statistical errors.

5. Particle Spectrometer

J. Hadley and J. Cladis

The parts of this equipment which involve gated Geiger-Muller counters have been completed and put to use in determining the energy spectrum of the neutron beam produced by bombardment of a beryllium target by 350 Mev protons in the 184-inch cyclotron. The neutron energies are determined by measuring the energies of elastically scattered protons from paraffin placed in the neutron beam.

Results so far obtained have been quite satisfactory with respect to performance of the equipment. Insufficent time has been put in to determine more than the general shape of the spectrum, which appears to consist of a broad peak centered at about 260 Mev, the half width being around 100 Mev.

We plan to continue measurements of this spectrum until statistical errors are small enough to show any detailed structure that may be present. Spectra of neutrons produced by bombardments of other targets, and at angles other than 0° to the incident proton direction will be examined, as well as spectra of secondary particles knocked out of various elements by the external proton beam.

6. Film Track Study of the External Neutron Field

B. J. Moyer, and Wade Patterson

A program of studying the flux densities of neutrons of star producing energies outside the shielding of the 184-inch cyclotron has been undertaken by the use of photographic emulsion in which the tracks of nuclear star particles may be observed. The results of this program should show correlation with the surveys made with a bismuth fission counter which detects only neutrons with energies in excess of 50 Mev.

Separate sets of film must be posted in the various locations for each different type of operation, e.g. 350 Mev protons on internal target with beam forward or 350 Mev protons deflected into the cave and so forth. Four different sets of film corresponding to four different types of operation are in the process of exposure currently. A preliminary survey with photographic film has indicated flux densities of star producing neutrons as large as $6/cm^2sec$ in the azimuth of the highest intensity. This figure makes use of the assumption that the cross section for production of an observable star in a silver or bromine nucleus is 1/10 of the total cross section for inelastic collision. This figure of $6/cm^2sec$ is approximately twice the value previously estimated from bismuth fission chamber surveys, but, or course, the comparison is to be made in the light of the assumed value of the cross section for star production.

7. High Energy Photons

W. E. Crandall, R. H. Hildebrand, B. J. Moyer and H. F. York

During the past three months the main lines of effort in the high energy photon experiment have been

1. To evaluate the yield from protons bombarding hydrogen.
2. To search for an observable lifetime of the photon emitting agent.
3. To search for the answer as to whether the photons are emitted singly or in pairs.

Along with these lines of effort some instrumental improvements have been effected. The efficiency of the pair counter has increased by enlarging the magnetic gap. Also the determination of the correction for loss of pair electrons due to scattering in the converter has been experimentally measured and found to agree well with the calculated corrections which have been in use based upon the usual formulas for small angle multiple scattering.

It has been necessary to study the yield from hydrogen by using a $C-CH_2$ difference method, employing alternate targets of carbon and polyethylene with a monitored beam of protons. This study has indicated that the yield per hydrogen nucleus is less than 2 percent of the yield per carbon nucleus under bombardment by 345 Mev protons. This must be contrasted with the relatively large yield of charged π^+ mesons, from proton proton collisions as observed by Richman and Wilcox and by Peterson and Panofsky. No successful way of evaluating this yield by use of liquid hydrogen has yet been conceived due to background defects. The search for indications of a lifetime of the photon emitter involves the tentative assumption that the emitting agent may be a neutral meson and may thus, in view of the energy available, be moving with considerable momentum. If then its lifetime were appreciable, the source of the photons would not be simply the geometrical area bombarded by the proton beam but would extend over a region of space in the close vicinity of this area; and the yield from any particular element of space at a given distance from the bombarded area would be determined by the half life of the emitting agent. The attempt to observe this kind of an effect was made by screening off the view of the target subtended by the pair counter in such a way as to block off adjustable portions of the possible emitting region. By this means it has been possible to say that if an intermediate emitting agent exists, whose mass is near that of a π meson, its mean life cannot be greater than about 2×10^{-13} seconds.

One of the conclusive types of data bearing on the origin of these photons is the answer to the question of whether their emission is singly or in pairs. Various arrangements of coincidence counters have been tried using the deflected proton beam in an attempt to find an answer. Due to the large background of other radiation detected by the counters within the small time intervals of the beam pulses it has not been possible to give an answer from these experiments. A cloud chamber with magnetic field has been under construction and will within the next quarterly period be employed in an attempt to secure this datum by a method which appears to have considerably more chance of success than the available counter methods thus far adopted.

8. Proton Elastic Scattering

Cecil E. Leith, Jr. and Robert Richardson

An experiment to measure the angular distribution of the elastic scattering of 350 Mev protons by various nuclei is in progress.

The proton beam used is the deflected beam from the 184-inch cyclotron obtained by scattering of the circulating protons into the mouth of the magnetic channel. The protons arrive in a pulse whose duration is 10 μsec and whose repetition rate is 60 per second.

The scattered protons are detected with a triple coincidence scintillation counter telescope using trans-stilbene crystals and 1P21 photomultiplier tubes. Between the second and third crystal is placed a thickness of Cu sufficient to assure that only protons with an energy greater than 315 Mev can penetrate to be counted in the third crystal.

A signal from each of the photomultiplier tubes is amplified and triggers a square pulse of duration 0.3 μsec. The pulses from the three detectors are fed into a coincidence mixing unit which utilizes germanium crystal diodes. The coincidence resolving time has been measured as 0.2 μsec. The output of the coincidence unit is fed to a standard scaler.

Measurements have been carried out for five elements, C, Al, Cu, Ag, Pb. The geometry of the scattering target and detecting telescope, and the amount of multiple scattering in the targets, have been such that the angular resolution has been $\pm 1^{\circ}$. The angular range between 5° and 20° has been covered.

The results to date have been consistent with the predictions of the transparent nucleus theory of Fernbach, Serber, and Taylor. Diffraction minima and maxima have been observed for the heavier elements at the following angles ($\pm 1.0^{\circ}$) as shown in Table I.

Table I

	Min.	Max.	Min.	Max.
Cu	11.5°	14.5°		
Ag	9.5°	12.0°	17°	
Pb	7.5°	9.5°	12.5°	16.0°

9. P-p Scattering at 340 Mev

O. Chamberlain, E. Segrè and C. Weigand

The equipment for this experiment has been entirely rebuilt.

Crystal counters of stilbene have replaced the gas counters for the 90° coincidence system and distributed amplifiers have replaced the ordinary ones. The new apparatus allows the collection of data at least 20 times as fast as the previous system, mainly because the resolving time for the coincidences has been reduced to a few times 10^{-8} seconds.

Several runs with the new equipment have been made and their results agree with the numbers quoted in the previous quarterly report, UCRL 541, namely spherical symmetry in the center of mass system with a cross section of about $4.5\ 10^{-27} \times cm^2$ per steradian, but it is clear that with the new equipment it will be possible to obtain more precise measurements and also to extend the angular region explored. For the last point, a run has been successfully completed at 17° (cm) with a liquid hydrogen target.

The results obtained with the previous apparatus have been prepared for publication in the Physical Review.

10. Measurement of the Cyclotron Duty Cycle

O. Chamberlain, E. Segrè and C. Wiegand

With the crystal counter and distributed amplifiers the temporal structure of the beam, when deflected by a thorium foil has been examined. Each beam pulse lasted for about 25 microseconds and exhibited a fine structure consisting of short charge bursts spaced 6.5×10^{-8} seconds apart corresponding to the cyclotron radio frequency.

If instead of the thorium foil the beam was deflected by the electric deflector the total emission lasted less than 1.5×10^{-7} seconds.

This experiment was not repeated under various conditions for the arc etc., but the present equipment is suitable to give this type of information when desired.

11. Short Life Po Isomers

N. Spiess

Measurement of the energy and period of the radioactivities found by alpha bombardment of Pb with the 60-inch cyclotron have continued. In all probability short life isomers of known polonium isotopes decaying by alpha emission have been obtained. Bombardments of separated Pb isotopes are planned.

12. Scintillation Counter Development.

L. Wouters

Keying of the high voltage applied to the photomultiplier has been tested; the purpose is to limit the counting time to just those intervals during which high-energy particles are produced by accelerators. This permits operation of the photomultiplier at considerably augmented voltages, thereby overcoming space charge effects which limit pulse output, and circumventing positive ion regeneration which causes high voltage breakdown having a slow onset.

Pulse voltages above 15 volts are easily obtained directly from the signal electrodes across 125 ohm line, using trans-stilbene crystals counting 1.5 Mev gammas. A preliminary crude coincidence experiment using a germanium crystal mixer shows a signal pulse half width of .006 microseconds at room temperature. This mode of operation eliminates the need for expensive broad band electronic circuits, though it requires a comparatively simple high voltage keyer. A correlation between maximum operable high voltage and keying pulse length is found such that beyond 200 microseconds, a 1P21 tube does not hold appreciably more high voltage than under d. c. conditions. In the described tests, the last two electrode gaps were operated at 350 v d.c. each; the remaining earlier stages were operated with a rectangular 1.6 kv 50 microsecond pulse (equally divided across the 8 gaps by small capacitors), with a 100 pulses per second repetion rate.

13. Production Cross Sections for Positive and Negative π^- Mesons by 345 Mev Protons on Carbon at 90° to the Beam

C. Richman and H. A. Wilcox

A method has been developed for measuring the absolute production cross sections for positive and negative π- mesons when various kinds of nuclei are bombarded with high energy charged particles from the Berkeley 184-inch cyclotron. As a first application of the method a study of the positive and negative π-meson production by high energy protons on carbon has been chosen. This study and the method used are reported in UCRL 592.

14. Capture of Negative π Mesons in Hydrogen

W. K. H. Panofsky

The high pressure vessel containing hydrogen at liquid air temperature and 3000 p.s.i. pressure has been used successfully in a number of exposures to study the absorption of π^- mesons from the cyclotron target in hydrogen. Gamma rays produced by this capture process have been studied by means of a pair spectrometer of low resolving power. The results obtained thus far indicate: 1. Gamma rays are produced in hydrogen and in hydrogen only. 2. The gamma rays emanating from the hydrogen are not monochromatic. 3. The gamma ray spectrum is compatible with several alternate interpretations. One of the best interpretations is that the spectrum is a composite distribution of monochromatic gamma rays at 130 Mev and a gamma ray distribution peaked at 65 Mev resulting from the decay of a neutral meson. This of course presupposes that the mass of the neutral meson be less than the mass of the charge meson. The distribution is also compatible with a two gamma ray process if for some reason the one gamma ray process is forbidden. It is planned to study this process with high resolving power.

15. Proton-proton Scattering Near 30 Mev

F. Fillmore and W. K. H. Panofsky

New plates have been exposed for proton proton scattering at 32 Mev in order to improve statistics on the past work. The plates are of considerably higher quality than the former ones and it is expected that better statistics will be obtained.

An experiment is also in progress to study the absolute cross section at 45° laboratory angle for proton-proton scattering as a function of energy up to 32 Mev. This work is being done by 90° coincidence counters.

16. Production of Mesons by Proton Bombardment of Liquid Hydrogen

V. Peterson

Further studies have been made on the plates exposed to mesons from a liquid hydrogen target. The yield confirms the high relative cross section per nucleon as compared to production of mesons in more complex nuclei.

17. Synchrotron Studies

A. C. Helmholz

The physics experiments with the synchrotron have been along several different lines and will be summarized below.

Investigations of γ,p reactions have continued and are reported in UCRL-569. The particular points investigated have been the energy distribution of protons ejected by the γ-rays, the variation of cross section, and the angular distribution. The experiments utilized two gas proportional counters in coincidence, the second biased so as to count only protons stopping in the counter. This cuts down the γ and electron background sufficiently. Protons from energies 8 Mev to 80 Mev have been counted. The numbers at energies beyond this were so small that it did not seem worth while at present to try to count them. For target elements of C, Cu, and Pb, the number of protons per unit energy is proportional to E^s where s is close to 2.0. It is not certain whether the deviations of s from 2.0 are significant. In Pb the yield at low energies decreases, and the point of departure from the $1/E^2$ curve is just where the Coulomb barrier effect sets in. The γ-ray spectrum is approximately proportional to 1/E so this suggests a cross section falling off as 1/E.

The yields of several different elements are consistent with assuming a cross section proportional to $A^{2/3}$.

The yield as a function of angle has been studied at 45°, 67-1/2°, 90°, and 135°. There is a pronounced forward maximum, which can be understood if one assumes that the γ-ray essentially interacts with a single proton. The fact that the peak is not at 90° but forward comes from the relativistic transformation from the proton's frame of reference. The assumption that the γ-ray interacts with only a single proton would indicate that the nucleus would be left with about 20 Mev of energy after the ejection of the proton; and could easily then boil off another neutron. Evidence that the cross section for the (γ,pn) is large has been obtained by Strauch.

Work has continued on the absorption of γ-rays producing various radioactivities, and also on the cross sections for such reactions for the bremstrahlung x-ray beam. Work is in progress on the (γ,p) process in Zn to give Cu^{67}. This radioactivity is weak compared to that of Zn^{63} and Zn^{62} but a chemical separation of Cu allows it to be measured, and the absorption curve using it as a detector should give the energy of γ-rays primarily responsible for this reaction. Bombardment of Cu and separation of Co has indicated measurable yields of Co^{61} by the $Cu^{63}(\gamma,2p)Co^{61}$ reaction. The relative yields for some reactions are, assuming $C^{12}(\gamma,n)C^{11}$ is 1.0; $Cu^{63}(\gamma,n)$ 14; $Cu^{65}(\gamma,n)$ 17; $Zn^{64}(\gamma,n)$ 12; $Zn^{64}(\gamma,2n)$ 1.6; $Zn^{64}(\gamma,pn)$ 3. Using the results of Blocker and Kenney on the energy flux, assuming a 1/E spectrum, and 20 Mev as the γ-ray energy producing the $Cu^{63}(\gamma,n)$ reaction, the cross section is 10^{-24} cm^2 Mev, which is in agreement with the work of Lawson and Perlman.

The apparatus for the bombardment of liquid hydrogen with γ-rays is being used experimentally. The set-up enables a cylinder of liquid hydrogen to be traversed by a collimated γ-ray beam. Only the ends of the containing cylinder are struck by the γ-rays. In the first run the mesons produced in the hydrogen

were recorded in photographic emulsions. While the scanning of the plates for mesons emitted at 90° is not at all complete, the tracks so far recorded indicate a spectrum extending to about 100 Mev with a flat maximum between 50 and 90 Mev. The liquid hydrogen target has also been used in a pair of runs, to measure with scintillation counters the mesons produced at 45°, 90°, and 135°. These data are still in the process of calculation and correction. The energy distribution at 90° does not agree too well with that from the emulsions but there are not enough tracks as yet from the emulsions to be sure of the results. The results with liquid hydrogen should prove to be of great value for the theory of gamma-ray proton interaction, since this system is simple enough to be treated quite rigorously.

The work of the Film Program Group has been in large part summarized in an article in Science by McMillan, Peterson, and White. The work studying the energy distribution of mesons is continuing, so that better statistics from plates exposed in the "sea of copper" with a small carbon target will soon be available. These distributions will be taken at 45°, 90°, and 135° to the direction of the incident beam. The spectrum at 90° shows a maximum at about 50 Mev with very few tracks above 100 Mev. The ratio of numbers of positive to negative mesons from targets to carbon and lead is also being studied.

A new experiment to look for excited neutrons or protons decaying into the unexcited particles and mesons is also being started.

The counting experiments are being continued and essentially consist in measuring particles entering a crystal and identifying them as mesons by their decay. Coincidences delayed by 1/2 - 2-1/2, 2-1/2 - 4-1/2, 4-1/2 - 6-1/2, and 6-1/2 - 8-1/2 microseconds are recorded. This essentially gives a decay curve and the half life so determined is $\sim 2.2\ \mu$ sec as expected for mu mesons. Several different types of experiments have been done. First, the energy distribution of photomesons from carbon and paraffin at 90° has been measured. The cross section for meson production from carbon falls off steadily from 30 Mev to 100 Mev, the highest energy measured. The hydrogen cross section which is obtained by subtraction is only about 1/3 at 30 Mev, rises to a maximum at about 60 Mev, and then parallels the C cross section. The relative cross section at 90° for 70 Mev mesons for several different elements has been measured. They are, assuming H is 1, Li - .45, Be - .33, C - .33, Al - .25 and Cu - .18.

The angular distribution at 45°, 67-1/2°, 90°, 112-1/2° and 135° for carbon and paraffin has also been measured. These experiments have been done to give information on the absolute cross section for γ-rays of 250 Mev energy. The hydrogen cross section has a broad maximum at about 90° of 7×10^{-30} cm^2 per steradian per atom, while the carbon cross section rises to 14×10^{-30} at 90° and falls off slowly toward larger angles. The data on hydrogen can be partially checked by the runs on liquid hydrogen.

A preliminary experiment to test whether the nuclear scattering of mesons is large was carried out. It indicated that the cross section is less than one-half the nuclear area.

The work on transition curves in Pb, Cu, Al, and C. has been completed. This work will be reported in a UCRL report.

18. Theoretical Physics

R. Serber

Scattering Problems. A paper has been completed on the interpretation on p-p scattering, and while it has been possible to find potentials which give a reasonably good account of the scattering, the lack of simplicity in the description of the forces leads us to distrust this interpretation. Calculation of the n-d scattering showed that the n-n scattering could be detected by looking for the slow proton ejected backward. Cloud chamber experiments show very few such slow protons and lead to the suspicion that the n-n cross section at high energy is considerably smaller than the p-p cross section. The measured total n-d cross section also gives the same indication. Measurements have been made of the diffraction scattering of high energy protons by nucleons. The position of the diffraction maxima and minima agrees well with our models, and it is expected that detailed evidence will allow closer check on features such as nuclear radius and transparancy. We are still having difficulty in interpretating the scattering of nucleons by nuclei. This situation will probably not be solved until additional information is obtained on the diffraction or absorption cross sections.

Mesons. A paper has been completed on the photo-production of mesons, discussing such questions as angular distribution, positive-negative ratio and total cross section. Pseudoscalar meson theory (in lowest approximation) seems to give the best fit. Work is being done on the meson production in nuclei; in particular on the effects, such as the exclusion principle, which makes the meson production cross sections not simply the sum of those of the isolated nucleons. In particular the production by deuterium is being studied with an eye to determining the charge dependence of the processes involved. Various mechanisms have been examined to account for the spectra of the gamma radiation emitted on π^- capture in hydrogen. The most likely explanation at the moment seems to be that π^0's are emitted which will give two gammas, and in addition that there is some competition of single gamma emission. Work is also proceeding on strong and intermediate coupling meson theory.

II ACCELERATOR OPERATION AND DEVELOPMENT

1. 184-inch Cyclotron

James Vale

Temporary Concrete Shielding. When the deflected beam into the cave was increased due to the changes in the deflector system, it was found that the radiation in the control room had also increased. A temporary wall composed of concrete blocks was therefore erected to provide additional shielding for this area. This wall was also erected so that a cubicle was formed between it and the main wall for the storage of radioactive materials. Meanwhile, plans were gotten under way for the permanent wall and for the permanent cave. Fortunately, the engineering and design work had been done previously on these concrete blocks.

Copper-plated Deflector Electrodes. When the electric deflector was rebuilt last fall, the copper electrodes were replaced with carbon electrodes to reduce the long life radioactivity built up in them. It was felt at the time that trouble might be encountered with the carbon because of outgassing and sparking. The carbon electrodes worked quite well; however, some outgassing and sparking did occur when it was turned on even though the deflector was turned off for only a few minutes during steady running. To correct this difficulty a new set of carbon electrodes were plated with about one or two thousandths of an inch of copper and installed in the cyclotron. These electrodes were successful and exhibited no sparking and no outgassing after the initial period. The radioactivity built up in them appears to be quite low.

Wedge-shaped Magnetic Deflector Bars. The use of elliptical sections in the magnetic deflector increased the total beam in the cave but over a larger cross sectional area. The beam density remained essentially the same. One way to increase the beam density is by altering the magnetic sections to provide focussing of the beam. Consequently the first and last sections were modified by cutting the edge faces off at a forty-five degree angle. This provides a field gradient across the hole through which the beam passes and thus gives focussing in the horizontal direction. This structure defocusses the beam in the vertical direction so that some additional means must be provided to take care of this difficulty. An increase of beam was obtained however.

Pre-magnet Collimator. A collimator for the deflected beam was installed during the last shutdown. The collimator consists of four jaws of four inch thick brass, and the assembly is located just ahead of the focussing magnet. The jaws are in two pairs: one for limiting the beam size in the horizontal direction and one for the vertical direction. Each pair of jaws is moved as a unit in its respective direction so that a given sized opening is moved about in the beam. These motions are motorized and are run from the control room during operation. This has made experimental setups for the deflected beam much easier and faster.

Rotor. The rotary condenser rotor was rebalanced during the last shutdown because some work had been done to it after its initial balancing. Peripheral contact brushes, described in a previous report, were installed at the main bearings for bypassing the r.f. currents around them. The life of the bearings has

been increased by these changes, principally by the improved contact brushes, because passage of r.f. current through the ball bearings is by far the most important factor in shortening the life of the bearings. With no brushes, the bearing life is a matter of just a few hours. The present bearings have been in use since the changes were made, about five months ago, and still seem to be in good condition. Previously the bearings had to be replaced every two or three months.

Pneumatic Delivery System. A delivery system for targets has been installed to get targets from the cyclotron to the chemistry building in as short a time as possible for the study of short half-life activities. The jiffy probe is used and the "rabbit" is blown out of the probe tube into a special carrier. It is then transported by means of a standard commercial four-inch pneumatic tube to the chemistry building. The rabbit emerges from the carrier on a special table set up for fast chemistry and counting. The carrier involves a complicated system of catches so that it cannot open and thus lose the radioactive target in the pneumatic tube. The pneumatic tube is connected to the back end of the jiffy probe so that the whole operation is completely automatic. The cyclotron operator merely presses a button at the end of the bombardment which turns off the beam and at the same time starts the chain of events for the delivery. The time taken for the target to reach the special chemistry table is about seventeen seconds from the time the beam is turned off.

Chevron Seal Oil Scrapers. The standard chevron vacuum seal has a tendency to leak oil when it is used as it is on the probe tubes. The oil leaks outward into the air side when the probe tube is used frequently. The seal was modified by reversing the rubber on the outside and by new spacers so that both gaskets point toward each other and thus effectively seal in the oil.

Oscillator Parasitics. Some trouble has been experienced in the past with the oscillator. The oscillator did not always start when it was pulsed, especially on the deuteron range. One solution was a tickler oscillator tuned to the starting frequency which helps the main oscillator start. However, it was found that the difficulty was due to one or more parasitic oscillations which prevented the main mode from starting. This problem was solved by inserting a stack of thyrite discs from the plate transmission line to ground. The thyrite was inserted at approximately the node points for the main modes which allowed the thyrite to be left in both ranges. This simplified the switching from one range to another.

2. Overhaul of the 60-inch Cyclotron

Thomas M. Putnam Jr.

Results. As reported in recent Quarterly Reports, the 60-inch was shut down for a complete overhaul on April 25, 1949. On November 1st, the first circulating beam was detected from the external radiation. The first production work did not commence until approximately three weeks later, while adjustments and measurements were made. Since the major changes and additions have been previously reported, the results and some of the details will be reported here.

Magnet Field Shape. The fall off of the magnet field at the exit strip radius (25 in.) was decreased from 5.7 percent to 4.8 percent. To maintain the focussing field at the center, it was found that more iron had to be added to the shims in the central region. With this, the large circulating beams reported below were obtained.

Oscillator-Dee Circuit Efficiency. The power required to obtain sufficient dee voltage for operation was reduced by approximately 20 percent.

Old Values:	220 kv between dees 95 kw power input	New Values:	215 kv between dees 75 kw input

This can be attributed to the increased Q of the tank circuit (smaller dees), a reduction of losses due to improved transmission lines, better r.f. connections and more adequate cooling.

Beam Output. Bother internal and external beams have been increased from two to three times the former operating values:

Probe (internal beams)	650 μa deuterons, compared to 250 μa alphas
Target (external beam)	25 μa alpha peak, compared to 15 μa 12-15 μa average, compared to 4-5 μa alphas 30-40 μa deuterons .

Operation has been limited on deuterons by the high radiation background. Thus, no attempt has been made to obtain high external deuteron beams. Based on average deflector efficiency in previous tests, it is expected that 60-70 μa external beams can be obtained easily with peak beams in the neighborhood of 100 μa at the present operating level. The internal beams above were obtained at 90-97 kw power input and the external beams at 80-90 kw input. The r.f. deflector limits the operating power somewhat because of sparking when the d.c. potential is applied.

Beam Energy. The external alpha particle beam energy has been measured by absorption in aluminum foils at 39.6 to 40.3 Mev. The expected average is in the range of 39.7-40.0 Mev. The variation noted occurred with variations in power, due in part to the r.f. deflector. The maximum value, 40.3 occurred with the exit strip moved out to a slightly larger radius (by moving the dee and deflector out from the center of the tank).

Present Characteristic Operating Values:

Alpha particle beam		16 μa	
Oscillator:	plate voltage	14.5 kv	Power 87 kw
	plate current	6.0 amp.	
	grid bias	1000 v	
	grid current	2.9 amp.	
Dee voltage:	east dee	101 kv	
	west dee	106 kv	
Ion source:	arc voltage	290 v	
	arc current	5.4 amp.	
Deflector:	applied voltage	38 kv	
	drain current	.5 μa	

Tank pressure: 0.3×10^{-4} mm. Hg.

Difficulties Encountered. Two difficulties occurred during the overhaul that are of sufficient importance to mention. The first, and most serious, was with oxygen-free high-conductivity (O.F.H.C.) copper tubing. Apparently after being heated hot enough to hard solder (Easy-Flo), this tubing becomes very brittle and even porous. This problem occurred in the fabrication of the dee stem covers and leaks (due to cracks and "pin holes" in the water lines) caused a two week delay in assembly. Entire sections of tubing had to be removed and new tubing put in.

The second difficulty occurred in the use of "O" rings in locations where, due to assembly and fitting, the tolerances could not be maintained. Leaks at these gasket joints were another source of delay in assembly. In general, "O" rings work well where the required close tolerances can be adhered to but they do not have sufficient flexibility to be used generally. In all joints within the dee and stem structures, "O" rings were tried but were replaced with standard 1/8 in. gasket material or hose nipple gaskets, depending on the size needed.

R. F. Connections. During the rebuilding of the 60 in. cyclotron in 1949, special attention was given to the construction of contacts between the radio frequency current carrying members. The current directly across some contacts, such as those between the dee stems and the dees, probably runs as high as 200 amperes per linear inch of contact. Since the designs used have proved quite successful, a description of the principle used seems in order. The following principles were incorporated in all radio frequency contacts where high current densities were expected:

1. 1/32 in. wide copper (silver plated) knife edge pressing into a flat copper (silver plated) surface.

2. Both copper members were heavy (1/4 in. - 3/8 in. thick) and directly water cooled, i.e., hard soldered to a copper tube carrying water or containing water channels within themselves.

Fig. 1 shows a typical section.

A special method of bringing the contacts together had to be used in the case of the junction between the vacuum chamber liners and the dee stem liners. The problem here was to make contact between two bars about a foot long that were accessible from one end only. Speed of operation was also a factor since there are four of these contacts and they are in a highly radioactive area. The problem was solved by making one bar tapered and the other bar with parallel edges, and forcing a wedge shaped trough over them, thus bringing them together. The trough was equipped with rollers on needle bearings so that it could not jam. It was forced on by one nut at the accessible end (see Fig. 2). This method of clamping is interesting in that it could be extended to any reasonable length.

A contact pressure of about 600 lbs. per linear inch of the 1/32 in. edge was used as a basic figure to aim at in contact design. It was found that, at this pressure, the edge definitely marks the flat surface.

Feelers. The feelers on the dee were made replaceable, without pulling the dees, by use of "O" ring connections for the cooling water. They were also made so that the gap between feelers could be changed from zero to 1-1/2 inches by turning a dial on the end of the dee stem tank. This operated a linkage through a metal bellows. Fig. 3 shows the method used to obtain an up and down motion of the feelers. There are four rollers attached to the block that carries the feeler. These run in four short grooves, the front pair of which slopes at an angle such that, when the block is moved back and forth by the linkage, the tip of the feeler moves straight up and down within 1/32 of an inch.

New Electrical Units. Integrator. Of the several methods of integrating an ion beam, the method of charging a condenser was chosen for its simplicity. Many requirements are made on an integrating circuit, not all of which can be satisfied with one type of integrator. The accuracy should be in the order of 1 percent for special cases where nominally an accuracy of 5 percent is sufficient. The stability should be such that infrequent checking will not introduce a large error.

Specifications of the Integrator. It was necessary to integrate currents from 0.1 microampere to 100 microamperes with an error of less than 1 percent.

Three ranges are used with amplification on the two lower ranges such that the output is that of the highest range 10-100 microamperes. The target voltage is maintained to within less than .01 of a volt of ground potential so that any leakage across the target cooling water circuit will not introduce an error. The circuit will amplify, but not integrate, beams of .01 microamperes. The beam is recorded on an electrical register with an interpolating meter to read the value of the voltage upon the condenser in between counts of the register. The instrument can be calibrated by means of a panel adjustment. A means of measuring the resistance to ground of the target is also incorporated.

Circuit. The circuit consists of several principle elements, the first being the condenser which is charged by the beam current. The second is the method of detecting the voltage on the condenser such that, when the voltage reaches a given value, it will be discharged and a count will be placed on the register. The third element holds the input of the integrator at ground potential by changing

the voltage on the opposite plate of the condenser to compensate for the building up of the voltage on it. Amplification is accomplished by charging a second condenser at the same time as the input condenser, thus, the charging current of the added condenser is in direct ratio to capacity. The general circuit layout can be seen from the block diagram shown in Fig. 4.

The input null detector is an electronic balance detector which is adjusted to zero by placing a small resistance to ground on the input such that, if any voltage appears on the target, a current would pass through this resistance which would show on the output. The charging condenser C-1 is switched to three volues (3 ufd, 0.3 ufd and 0.03 ufd) which give the three integrating ranges. The condenser C-2 is maintained at 3 ufds. The condensers C-1 and C-2 are the same on the direct range. The voltage that builds up on C-1 appears as a negative voltage at point "A". This voltage at point "A" is applied to the cathode of a grid controlled thyrotron, whose grid voltage is adjustable. This thyrotron will fire when the voltage at point "A" is equal to the voltage applied at the grid; thus, a means of calibrating the instrument is obtained. A pulse from the thyrotron is amplified and applied to the electro-register and to a relay whose contacts are across condenser C-1 and C-2 which discharges them at the time of the count. The time which the relay is closed is small compared to the charging time of the condenser. If ordinary condensers are used for C-1 and C-2, the voltage to which they charge is a function of the charging rate because of the soakage effect of the dielectric. The condenser must be of some construction that does not have this soakage effect. To change the circuit to a straight amplifier, resistors are switched in place of condensers C-1 and C-2, thereby, making the circuit a standard electrometer circuit where the amplification is equal to the ratio of the resistance of the two resistors.

Extensive tests were made on the integrator which maintained an accuracy of within 2 percent over a two week period with line voltage changes of 105-125 volts. When the instrument is monitored every few hours during special runs, errors of less than 0.3 percent were introduced. The circuit is such that many adaptations of the unit as an amplifier or integrator for a special purpose can be made with only minor changes internally and, in most cases, this can be accomplished by external equipment.

The Oscillator Metering and Protection Circuits. In addition to the regular direct current meters across the supply, remote reading meters are necessary for operation. The supply is operated above ground at the bias voltage of the main oscillator. Therefore, the remote reading meter must be isolated from the voltages of the supply and operated at near ground potential. The indirect meters needs to employ electronic amplifiers in preference to resistance networks.

Plate Voltage meter. The plate voltage is read through a bleeder (series 20 megohm resistor) from the positive voltage of the supply through a meter to ground. The voltage from the negative of the supply is also taken to ground through a 20 megohm resistor and the current is applied to an amplifier such that the amplifier will bleed off from the voltmeter that current which is equivalent to the voltage on the negative of the supply. Thus, the reading of the meter is the same as if it were directly across the supply.

Plate Current Meter. The plate current is the most difficult to measure by isolation, since in service the negative of the supply can reach 20,000 volts if the positive voltage is grounded due to an arc. A d.c. current transformer was used in which one turn through the transformer was made by the negative lead of the power supply. The secondary of the transformer had 6,667 turns which apply a d.c. flux to the transformer. When 1.5 milliampere was flowing through the secondary, the flux was equal and opposite to the flux set up by a 10 amperes current flowing in the primary. The resultant d.c. flux in the transformer was measured and amplified, causing the current in the secondary to be of such a value that the resultant d.c. flux in the transformer would be zero. This d.c. current transformer with its associated equipment is accurate to within 1 percent from 0 to 10 amperes.

Plate Watt Meter. In order to read the plate power on the oscillator, an electronic watt meter was built which would operate from the voltmeter and currentmeter currents. The type of circuit used was a proportional time base switch which gives the product of voltage and current with a high degree of accuracy over the range to which the instrument will lock in. Fig. 5 gives a block diagram of the circuit.

A standard current of 1.5 milliamperes is applied to an electron switch, the output of the switch being proportional to the ratio of the time in which the circuit is on. The output of the time switch was compared in a null circuit with the current from the voltmeter circuit (1 milliampere maximum). The output of the null circuit operates the time base such that the standard current is reduced to equal the voltage meter current. The same time base is applied to a second time switch in which the plate current (1.5 milliampere maximum) is applied. Since the time base is equal to the ratio of the voltage meter current over the standard current, the output of the second time switch will equal the product of the current-meter current times voltage meter current over the standard current. Thus, the output is equal to the wattage, and the accuracy is that of the standard current. The time base will operate for voltages of 4 - 20 kilovolts, thus making it necessary that the plate voltage be above 4 kilovolts in order to get a wattmeter reading. The value of the current can range from zero without introducing an error. This device was tested and shown to have an error of less than 1 percent.

Over and Under Voltage Trip Circuit. To protect the power supply from shorts, an under-voltage circuit was deemed desirable to turn off the main power if the voltage of the power supply were under 4 kilovolts. A time delay of 1 second was incorporated to allow the voltage to build up on the power supply when initially turned on. The over-voltage trip circuit does not turn the main power off, but operates a mechanical drive to turn the power tap switch down until the voltage on the power supply is below this upper limit. The input of the circuit is such that it can operate in series with the voltmeter, thus, operating by means of 1 milliampere current rather than a voltage. Both the value of the under-voltage and the over-voltage are adjustable from the panel.

The Ion Source Arc Supply. The type of ion source in general use at this laboratory is one incorporating a filament placed at a negative voltage (300-500 v) with a high current (about 5 amp.). Some experimental P.I.G sources are being tried which are 3 kv and currents of order of half an ampere. It is necessary to regulate the arc for any reasonable length of operation, consequently, a single regulator to answer all our needs was constructed. In maintaining an arc, the

voltage required is dependent upon gas pressures and the type of gas used. Since the gas pressure is not stable, the arc voltage will not remain constant. This makes it necessary to maintain a constant current through the arc by allowing the voltage to seek any desired level. Neither the speed nor the degree of regulation need be very great to maintain an arc. It is therefore possible to use a simple regulator.

The regulator consists of five main units. The first is the switching panel which allows us to select either a positive or negative potential at the arc in addition to selecting either of two supplies (600 volts at 5 amps. or 3,000 volts at 1 amp.). This switching panel takes care of all of the switching needs within the unit and provides flexibility for ion source experiments. The second unit is the series regulator consisting of 8 Eimac 304 TL tubes. Six of these tubes are in parallel. The other two are also in parallel and are switched by the switching panel to act as a cathode follower to operate the grids of the six parallel tubes when the high current supply is used. When the low current supply is used, all eight of 304's are switched in parallel. The third unit is the control circuit to maintain the arc current constant. The output of the control unit operates the grids of the 304's directly. The output voltage of the control unit varies from -400 volts to + 100 volts. This range of voltage is accomplished by separating the power supply and placing the load resistor between the two sections as shown in Fig. 6.

The input of the control unit is taken from the resistor in series with the arc plus a standard reference voltage which is obtained from a small variac on the control desk; thus, the output current of the regulator must be of such a value that the voltage drop across the series resistor is equal to the standard voltage. The 4th and 5th units are two power supplies, one for 600 volts at 5 amps. and the other 3,000 volts at 1 amp. An additional feature was incorporated to prevent the arc voltage from going above a predesignated value. It is possible thereby to turn the arc voltage on in the absence of an arc and have the arc voltage rise slowly towards an upper limit as set by a panel control. Also, if the arc should go out, this upper voltage limit will not allow the voltage to go to a dangerously high value.

Circuit. The circuit is that of a conventional voltage regulator power supply. Instead of regulating the voltage of the arc, the voltage is regulated across a series resistor whose voltage is proportional to the current through the arc; thus, it becomes a current regulator. Using the simplified schematic shown in Fig. 7, we can see how the circuit works.

The power control variac adjusts the voltage output of the power supply. The 304's act as a variable resistor to lower the voltage of the arc to such a value as to obtain the desired current. The current flowing through the signal resistance, R-1, sets up a voltage proportional to the current. A second voltage is obtained by a rectifier attached to the current control variac on the desk. The difference between the reference voltage and the signal voltage is amplified by the control amplifier. The output of the control amplifier controls the grid voltages of the 304's. A third voltage is placed in series with the signal and reference voltage. This voltage is zero as long as the arc voltage is below some upper limit. Thus, this voltage has no effect on the circuit as long as the arc voltage is below the limiting value. When the voltage rises above the

limiting value, a voltage appears across this third resistor which drops the grid voltage of the 304's so that the arc voltage is maintained at this limiting value. The reference voltage used for the upper limit has a time constant starting at zero, when the arc regulator is turned on such that the voltage will rise slowly to this limiting value. The only difference when the circuit is changed from the low voltage-high current to the high voltage-low current supplies is the changing of the 304's to a cathode follower input which allows the 304's to conduct 5 amperes of current with only 300 volts dropped across them. The rating of the 304's is sufficient to take all of the output of the power supply although, when operating, the output of the power supply is reduced by the variac to a value that is just sufficient to maintain the arc.

This regulator regulates the current to a sufficient degree to maintain the arc for wide variations of gas pressure and conditions in the tank. The time constant of the regulating action is approximately 0.1 second which seems to be fast enough to prevent the arc from extinguishing.

Filament Heater Supply. The filament heating supply was changed from an r.f. supply to a 3 phase d.c. supply. The ripple encountered on this supply is not large enough to cause any trouble even on a relatively flexible filament holder. The supply consists of two 100 ampere dry disc rectifiers with voltage tap adjustment to give voltages of 6-12 volts. The input power is controlled by a motor driven variac. Automatic control of the variac was tried but abandoned because of mechanical difficulties with the drive mechanism.

Since the filament is operated at the arc voltage, the metering of the filament current at the desk presented a problem. Using a special constructed saturable reactor and metering the a.c. excitation current of the saturable reactor, a relatively linear meter reading was obtained. It is necessary to recalibrate the meter face if the basic design of the saturable reactor is changed but, when similar reactors are used, calibration can be accomplished by slight changes of the excitation voltage.

Low Cost Venturi Flow Switch and Flow Rate Indicator. Description. The device consists of a Venturi tube, a pressure actuated electrical switch and a Bourdon pressure gauge.

Operating Principle. The switch makes use of the pressure drop and pressure recovery across a Venturi tube from the throat to the end of the diffuser. Water flowing through the Venturi depresses the throat pressure several psig below that in the outlet header to which it is connected. A pressure switch connected to the throat of the Venturi closes the control circuit on decreasing pressure, permitting the cyclotron to operate. A single pressure switch connected to the outlet header is set to open the control circuit if this pressure should decrease by an amount greater than one psig.

The pressure difference between the Venturi throat pressure and the header pressure is proportional to the square of the flow through the Venturi. This difference as a function of flow is plotted in Fig. 8 from which the flow rate through each cooling line may be determined. In case the return header pressure is expected to remain constant, the gauge may be calibrated in terms of flow rate directly.

A modification of the above system is necessary in installations where the cooling water discharges at atmospheric pressure. A vacuum switch is connected to the Venturi throat, instead of a pressure switch, and the Venturi throat pressure is run below atmospheric. The vacuum switch is set to open the control circuit on decreasing vacuum. It is not necessary to monitor the recovery pressure in this case, since it is atmospheric.

Costs. The economy of the system is gained from the use of the following:

a. low cost pressure switches instead of the more expensive differential pressure switches usually employed in such devices,
b. standard bar stock and standard piping to minimize machining time.

The approximate cost of the several component parts is as follows:

1.	Venturi complete	$3.50
2.	Pressure switch (including microswitch)	5.00
3.	Pressure gauge	1.50
4.	Connecting pipe and fittings, 1/4 in.	1.00
5.	Assembly	1.00
		$12.00

A diagram of the assembly is given in Fig. 9.

Radiation Shielding. The radiation around the cyclotron during operation and the background after long runs has reached a rather dangerous level. This is due to high internal circulating beams as well as external beams and the increase in energy of the beam. The following steps have been taken to reduce this:

1. The east entry into the cyclotron has been plugged with concrete bricks.

2. Four additional water tanks were added on the south side of the shielding barrier to provide additional protection for personnel in nearby ORL.

3. One ton of iron aggregate "MO" shielding concrete was used in shielding blocks around the transmission lines to reduce the radiation leaking out at this point.

4. Seventy-five gallons of ammonium nitrate have been put around the tank in stainless steel cans wherever they do not interfere with operation while changing targets and filaments.

5. To protect the operators, about one ton of lead has been put around the tank.

The following steps have also been proposed:

6. To provide a shield for reducing the neutron energies and to absorb some of the gamma radiation, designs are being considered for 6 in.

copper shields to cover 60-80 percent of the available perimeter of the tank. These copper shields will attenuate the fast neutron beams, thus making the water barrier effectively thicker and they will reduce the background radiation while the machine is off.

7. To reduce background due to scattered radiation from above, a one foot layer of "MO" concrete can be placed under the present top layer of water tanks. This will give an effective thickness equivalent to 6-8 feet of water.

8. To provide for thicker water doors, a plug-in type has been designed. These would run on rails and would be five feet thick as compared to the 30 inch doors now in use. They will have the additional advantage of being moved more easily and can be opened from the inside as well as outside. They would also take up less floor space in the cyclotron room.

In order to reduce the radiation the operating crews receive, several steps will be necessary:

1. Targets should be made easier to handle. Ideally, they should be handled entirely by remote control. Speed and ease of handling will be improved for the present while designs for a new system are being worked out.

2. The capacity compensator is now remote controlled and the filament position will be remote controlled shortly. Remote control of the ion source and probe are to be considered in the near future.

3. As discussed above, additional shielding has been added to reduce the background radiation around the machine. This should be increased in certain areas.

Proposed Developments on 60-inch Cyclotron. Pumps. The present operating pressure for the cyclotron is in the range of 0.3 to 0.4 x 10^{-4} mm. Hg. A check of the effective pumping speed of the diffusion pumps now in use shows the total speed at the tank is 650 liters/second. The measured speed at the pumps is 800 liters/second for the pump at the back end of the dee stems and 300 liters/second for the 8 in. Westinghouse pump on the tank through the baffles. With a total tank volume of 3,000 liters, it is apparent now that, in order to obtain the lower operating pressures necessary for higher dee voltages, the pumping speed for the tank will have to be increased. With the limited space available around the tank, it was found that two Radiation Laboratory 14 in. diffusion pumps could be put on a common manifold on the deflector (west) side of the tank. In order to reach the deflector, however, the present 8 in. pump will have to be removed. The two 14 in. pumps will have newly designed water-cooled and refrigerated baffles installed. They will be backed up by a common booster (DPI MB200) pump. A 105 CFM Kinney pump (DVD 8810) will be used as a backing pump. A similar system to that now in use will be used for roughing. A 6 in. line will connect the present pump manifold to the tank through a 4 in. Cornog type valve. For roughing, two 46 CFM Kinney pumps (VSD 8811) and the 105 CFM pump mentioned above will be used. An estimated roughing time of 10-15 minutes

is expected. During operation, the large Kinney pump will be used to back up the two 14 in. pumps and the present main pump at the back end of the dee stems. The other two Kinneys will be put on the target and ion source pump-out lines as is now done.

New Dee Stems. Due to the bad water lines on the dee stem covers, a new set of covers has been designed and will be fabricated shortly. The new units will be fabricated of the same thickness of copper but will use oxidized copper for the water lines in place of the O.F.H.C. material used before. Since the r.f. deflector has proven to be quite successful, a new clamping method for the dees will be incorporated decreasing the size at the entrance to the dee stem tanks and providing more clearance for internal ring shims. Also, "O" ring gasket joints are to be eliminated and the number of joints to be reduced.

Operations Summary 11/49 - 1/50.

Deuterium bombardments		378.4 hrs
Alpha bombardments		942.3 hrs
Proton bombardments		1.3 hrs
Experimental operation		122.0 hrs
	Total Operation	1444.0 hrs
Outage - during operation		600.0 hrs
	Available Operat. Time	2044.0 hrs
Outage - holidays		164.0 hrs
	Total Time	2208.0 hrs
Operating efficiency (available time):		70.6 %
Overall efficiency		65.4 %

Following is a breakdown of outage time:

Adjustments (ion source, filament, dees, etc.)	77.4 hrs
Replacing ion source filaments	53.0 hrs
Electrical maintenance	59.4 hrs
Mechanical maintenance	41.9 hrs
Check up (inspection of wearable parts)	52.2 hrs
Pumpdown (tank and tubes)	10.5 hrs
Bake in (oscillator tube and tank)	154.1 hrs
Leak hunting	58.0 hrs
Replacement of expendable parts	74.0 hrs
Miscellaneous	19.5 hrs
Total	600.0 hrs

During the start-up period following our six-month overhaul, a large amount of time was spent in outgassing new metal surfaces. This process consumed 154.1 hours of the 600 hours of outage. A speeding of this process could be achieved with a more adequate pumping system than is now available. Efforts to overcome this situation are to be outlined below.

After the initial set of adjustments were made to align the dees, deflector and ion source, with respect to operating frequency, only minor changes have been necessary. Information available from magnetic field plots and data collected greatly facilitated the beam search. Evidence of the fact exists in that only 20.3 hours was spent in "searching" after the bake-in had been accomplished. Along this line, it should be noted that the greatest increases in beam intensity were obtained as the result of introducing more iron into the pyrimidal shims. Although the relative position of the shims with respect to the geometric center of the pole face is not as sensitive as it was before the change of pole face, the amount of central iron is very important. Magnetic field plots showed the reason for this by indicating a dip in field strength in the central region (without shims).

Filament life under operating conditions (arc voltage 300 volts and arc current 5.5 amperes) has caused some concern with respect to outage. Our present design limits the filament size to 80 mil diameter tungsten. With this diameter wound into a three-turn spiral, filament life varied from 5-15 hours, depending upon the location of the arc as illustrated in Fig. 10.

Shorter lives were recorded by operating under condition (A) where less mass was available than under condition (B). Also, larger beams were associated with condition (B) which are attributed to increase in arc density by decreasing the cross section area exposed to positive ion bombardment, thus localizing the heating. This was checked by use of a rectangular filament (termed a "hairpin" filament) situated in a horizontal plane under the arc box orifice. As filament wear progressed, beam intensities increased, with all other conditions maintained constant. The increase was from 10 μa to 15-25 μa with alpha particles. See Fig. 11.

To further substantiate this, a secondary filament was placed above the regular filament which was allowed to be heated by ion bombardment only (no external current passed through it). It was positioned so as to occupy the point of maximum wear of previous filaments. A factor of two increase of life resulted. Maximum beams occurred upon installation of this filament and decayed progressively with wear (opposite to normal conditions). Overall variation was not as marked. Difficulty in striking the arc to the secondary filament was experienced after about 7-10 hours of operating. The location of the secondary filament is shown in Fig. 12.

Performance figures show an average beam of 12.5 μa of alpha particles through the life span of the dual filament configuration.

Beam Energy History. The following history of the 60-in. alpha beam energy was obtained from data taken by Elmer Kelly while making excitation runs on this machine. All data were accumulated with the same apparatus; namely, a wheel upon

which was mounted 15 weighed aluminum foils of varying thicknesses, ranging from 144 mg/cm^2 to 157 mg/cm^2. See Fig. 13. The beam current penetrating the foils was measured and compared with the foil current in the following manner:

$$\frac{I_c}{I_c + I_f} \times 100 = \% \text{ of total beam transmitted}$$

The percent transmitted was then plotted against the foil thickness and the 50 percent thickness chosen as the beam energy determination point. Using this thickness, the beam energy was read from a plot of energy versus thickness made from data compiled by Bethe and Livingston.

Date	50% Absorption Thickness	Energy	Magnet Current
Jan 27, 1946	160.8 mg/cm^2	39.7 Mev	295 amps
July 20, 1946	150.0 mg/cm^2	37.3 Mev	279 amps
Dec 7, 1946	146.8 mg/cm^2	36.8 Mev	290 amps
May 19, 1947	144.0 mg/cm^2	36.2 Mev	288 amps
May 24, 1948	149.5 mg/cm^2	37.2 Mev	289 amps
May 31, 1948	147.0 mg/cm^2	36.9 Mev	289 amps
Feb 18, 1949	151.5 mg/cm^2	37.5 Mev	285 amps
Feb 23, 1949	300.0 mg/cm^2 (Deuterons)	18.6 Mev	289 amps

The final column above contains the magnet current associated with the energy determination data and was obtained from the Log Records. The last determination was made by John Jungerman on the deuteron beam using a different method.

James F. Miller

Notes on Ion Source Design for High-Order Ions. In the program to obtain a usuable beam of heavy ions (such as carbon ions) from the 60-in. cyclotron, attention has recently been centered on new schemes of producing completely stripped ions rather than on improving the performance of existing ion sources. It is considered necessary to increase the present yield, which is of the order of 10^{-15} amperes, by at least a million-fold.

Factors which seem important for production of a large number of completely stripped heavy ions are discussed below. These factors indicate the features one should try to incorporate in the ion source and accordingly, limit the number of schemes to be tried first to a few.

1. Ionization by electron collision is more efficient than other methods. Bombardment by positive ions requires ions of the same velocity as that of bombarding electrons; hence, their energy is unreasonably high.

Stripping of a given electron from an atom by other electrons begins at the ionization potential for that order ion, rises sharply to a broad maximum at five to ten times the I.P. and at high energies falls off as 1/V. Thus, for the sixth electron of carbon, for which the I.P. is 489.882 volts, it would

be desirable to have bombarding electrons of 2500 volts. At this energy the efficiency of first order ionization would be reduced to roughly 1/10th its maximum.

2. Chain process for ion-orders. It is possible to strip off several electrons in a single collision, and also to get more than one collision with an ion during its normal time of passage through the discharge but neither can be relied on for an appreciable yield of final-order ions. For multiple-order ionization, attainment of a stationary chain process would be ideal whereby the only way for an ion of a given order to escape is by going to a higher order, until finally the completely stripped ion is extracted. Actually, this stationary chain is not realizable. If it were, the increase in yield of nth order ions might be of the order of 10^n. However, even if a moderate improvement can be made in holding ions until they go to a higher order, the final gain may still be tremendous. (A deliberate attempt to set up a chain process is exemplified by Lamar and Luhr[1] where they used a preferred recombination process to give H^+ ions in preference to H_2^+ ions.)

The stationary state of a chain becomes a relation between the various orders of ions. Let N_k be the number of ions/cm^3 which have had k electrons removed.

$$\frac{dN_k}{dt} = \sum_{j=0}^{k-1} (\nu_i^{\circ})_{j/k} N_j - \left[(\nu_i^{\circ})_{k/(m>k)} + (\nu_1)_k\right] N_k$$

where $(\nu_i^{\circ})_{j/k}$ is the net ionization rate at which jth order ions go the kth order in one step ("net" means that the recombination rate at which kth order go back to jth has been subtracted off). ν_i° is principally a function of the density and of the energy distribtuion of electrons. $(\nu_1)_k$ is the loss rate of kth order ions. It is a lumped loss, including recombination with negative ions (which will probably be more important than recombination with electrons, taken care of in diffusion (under plasma oscillations, density gradient, space charge, etc.), extraction from the ion source by fields meant to operate only on the final order, etc. Under stationary conditions, as many ions enter an order as leave it:

$$\frac{dN_k}{dt} = 0$$

$$N_k \cong \frac{(\nu_i^{\circ})_{k-1/k}}{(\nu_i^{\circ})_{k/m>k}} \quad \frac{N_{k-1}}{1 + (\nu_1/\nu_i^{\circ})_k} \quad .$$

Suppose there are no losses: $\nu_1 = 0$. Then the relation between the N°s is like that between elements in a radioactive chain in equilibrium. A small $(\nu_i^{\circ})_{k/m>k}$ corresponds to a long half-life, and, consequently, a large number in the kth state. Here, however, we may within limits change the relative numbers in the states by changing the energy distribution of the ionizing electrons. The effect of losses, given through ν_1, modifies the ideal chain process to a non-conservative one. Even with the steady leaking out of ions at each order, the

process is a better one than where no attempt is made to hold the ions. If incompletely stripped ions are extracted, we not only have lost a reserve of partially completed material, but we increase the quantity of non-resonated ions and the number of collisions with residual gases in the cyclotron, giving ions that are resonated but are not of the desired element. Hydrogen and helium are in particular always present as residual gases, and helium doubly ionized cannot be resolved from six-ionized carbon by the cyclotron.

3. Start with carbon atoms or low order ions, rather than with molecules. Since dissociation of molecules in general is a multi-stage process, with ready recombination, we might well eliminate several steps in the chain process by starting with carbon atoms, evaporated off a carbon filament or from a small oven, even though the gas pressure adjustment thus becomes sluggish. For instance, the dissociation processes for CO_2 and CO are:[2]

$$CO_2 \longrightarrow CO_2^+ \qquad CO \longrightarrow CO^+$$

$$CO_2 \longrightarrow CO + O_1^+ \qquad CO \longrightarrow C_1^+ + O_1$$

$$CO_2 \longrightarrow CO^+ + O_1^+ \qquad CO \longrightarrow C + O_1^+$$

$$CO_2 \longrightarrow C_1^+ + O_1 + O_1$$

With hydrocarbon gases, the difficulty of getting C or C^+ as one of the dissociation products seems to be even greater.[3]

Further, oxygen has a tendency towards electron attachment to form negative ions. Recombination of positive ions with negative ions to give neutral particles is a much easier process than recombination with free electrons, since in the former case there exist two bodies after the meeting, to permit conservation of energy and momentum.

Aside from the unwanted atoms providing an opportunity for formation of negative ions, they act as a diluent, contributing unwanted space charge and using up ionizing electrons.

4. Accumulation of Effective Electrons. Regeneration of Low Energy Electrons. Just as for ions, we wanted $dN_k/dt \geq 0$ for each k, in order to build up a stationary chain, correspondingly for the other partner in the ionizing process, the ionizing electons, we want $dn_{eff}/dt \geq 0$ and $n_{eff.} \gg 0$, both of which are necessary conditions for "electrical breakdown" of a gas. $n_{eff.}$ denotes the number of effective electrons, those of ionizing energy. The build-up of electron density under $dn_{eff.}/dt > 0$ is so rapid that actually the only condition is $dn_{eff.}/dt = 0$ (i.e., any <u>effective</u> electrons lost are replaced by others).

First, consider alone the need for large number of effective electrons, or rather, for high <u>density</u> of them, $\rho_{eff.}$. It is <u>possible</u> to have a high density of electrons even though the electrons make a single passage through the region of ions and electrons. In fact, Planiol[4] got approximately 1 ma beams of H and H_2 mixed using crossed jets of atoms and electrons. Scott[5] got

4 ma H^+. Now a gain of considerable magnitude may be made just by giving the electrons a helical path by application of a magnetic field perpendicular to an appreciable component of the velocity. This effectively increases the density of the gas, since the linear axial distance between ionizing collisions is made shorter. The number of electrons flowing may be increased by the presence of positive ions, but the condition where a plasma is formed is harmful, since, although many electrons exist in a plasma, they are almost entirely trapped electrons of energy so low (1-10 volts) that they cannot do any ionizing. The difficulty with electron jets or streams making a single crossing is not particularly with the density, but rather with the power needed to produce them, and the energy carried off by them. In particular, if it is desired to use a low gas pressure, many of the electrons would not have a collision while crossing.

Thus, we see the great advantage to be gained by reluxing the electrons. A number of ion sources using this principle have been designed. The Phillips Ion Gauge, was adapted to make and ion source by Penming and Moubis[6], see also UCRL Technical Reports. A similar type was made by A. T. Finkelstein[7]. Heil[8] made a source of the same type that used only about 1 watt power for a beam of 1 ma of protons. He got a mean useful path of about 5 meters per electron (about 120 oscillations), and electron densities up to 5 amps/cm^2 (usual emission density for a hot cathode he gives as about 1/2 amp/cm^2).

By addition reflux, we have now obtained high density with low power, and $dn_{total}/dt \geqslant 0$, where $n_{total} = n_{effective} + n_{(E < I.P.)}$. Unless secondary electrons are given off by the negative electrodes, to provide new electrons of high energy, it is the number of useless electrons which has been made to increase or remain steady, not the number of effective electrons.

Without some means of reconstituting the energy of electrons between collisions (or draining off low energy electrons by a dumping scheme, and replacing them by new high energy electrons) the reflux would soon give us a useless mass of electrons, indeed, worse than useless, since they would be trapped in any potential maximum and form a plasma where controlling fields could not penetrate. If the reflux condition were not needed, there exist many examples in which the energy of the electrons is restored between collisions. The simplest example is the glow discharge between electrodes at fixed potentials. If a high frequency alternating potential is applied (electric-field type discharge, or "E-type" for short), each electron is moved back and forth, with some maximum energy at the midpoint of its oscillation, but there is a superposed drift toward the two electrodes. Thus, drain and consequent power loss has not been eliminated, though energy is reconstituted and the path length is considerably increased over that for a single passage. Sources of this type are, in particular: Babat, Journal of Instituion of Electrical Engineers, 94, 27-37, (1947) (Russian paper, received in 1942, revised 1946); Thonemann, Nature 158, 61 (1946); Rutherglen & Cole, Nature 160, 545 (1947); Hall, Rev. Sci. Instru. 19, 905-910 (1948). The last two are practical sources, quite similar. The most comprehensive analysis of the E-type discharge is in a series of articles by Margenau & Hartman, Phys. Rev. 73, 297-328 (1948), and subsequent articles by Margenau's students.

An electrodeless magnetic-field type discharge, or "H-type", (see Babat as referred above, also Bayly and Ward[9], and G. Mierdel[10], both accelerates all electrons and at the same time refluxes them by a circular path. It can hardly be applied however in the already present intense magnetic field of the cyclotron.

Thus in order to get both reflux of electrons and regeneration of their energy, we are almost led to consider some sort of resonance acceleration process, as in the cyclotron itself. It would be highly desirable if this could be an angular acceleration. But, in the cyclotron field of 15,000 gauss, a magnetron type source would be of extremely small dimensions and high anode potential.

For the first design, it has seemed desirable to try a linear resonance process for the electrons. A fixed potential well of parabolic shape has the feature that the frequency of oscillation is the same for any particle of fixed q/m, independent of its energy. Once the electrons are brought into phase, they will all cross the apex of the parabola at the same instant. It merely becomes necessary to apply a small alternating r. f. potential across a gap at the apex. The potential well on either side is internally R-C coupled so closely that it moves up and down through the small r. f. potential as a unit, and the electrons when inside either of the arms does not see the changing potential. The linear process exactly corresponds to the cyclotron action. This scheme has been used, not as an ion source, but as a generator of high direct potentials by A. M. Skellett[11]. He calls it a palletron ("Vibrator"). The design details of an ion source based on resonance acceleration of electrons in a parabolic well will be given later.

A first alternative to the scheme above might be called in <u>E-discharge with phased reflection.</u> It is a modification of an ion source designed by H. Alfven and H. J. Cohn-Peters[12] on the basis of a breakdown type of discharge they found. This is an E-discharge much as in the Rutherglen and Cole and the Hall ion sources. In the latter the replacement factor of effective electrons (which are drifting off toward both electrodes) comes from those produced in the gas at the ionizing impact. On the other hand, in the Alfvén and Cohn-Peters breakdown the replacement factor comes from secondary electrons emitted by "dirty" (not outgassed, or else deliberately coated) electrodes placed inside the discharge chamber. Electrical breakdown of the gas occurred at pressures as low as 10^{-6} mm Hg, while the ordinary E-discharge in general gives breakdown at pressures of about 10^{-3} mm Hg or higher. Hall found he needed about 3×10^{-2} mm Hg in order to get a discharge giving high yield of H^+ relative to H_2^+. The low pressure possible in the Alfvén and Cohn-Peters source permits the ionization region to be an open part of the ion-accelerating apparatus. There is a lower critical V_{max}/d (where d is the distance between electrodes) to strike the discharge since the electrons must have enough energy on striking the electrodes to give more than one secondary on the average. In addition, there is a sharp upper critical V_{max}/d above which the electrons cross the distance between electrodes in less than half a cycle. This extinguishes the discharge since the secondaries must be emitted in the proper phase to move away from the electrode under the r.f. Alfvén and Cohn-Peters got about 1.5 ma of mixed D^+ and D_2^+ from this source.

Possibly this source could be used as it is. One objection is the wearing out of the emissive property of the electrodes. They coated the electrodes with MgO for long-term emission. A slight modification might be to make one or both electrodes a diffusing membrane that permits the desired gas for the ion source to pass. Thus, a supply of both secondary electrons and of atoms is furnished.

But, it would seem more favorable to use the principle of this type of discharge to modify the Rutherglen-Cole and Hall type. The emission of secondary electrons by the electrodes would become unnecessary if the ambipolar loss of electrons under the ordinary r.f. field could be prevented, and some means provided for reflecting the electrons in a phase so that as many will then drift away from the given electrode as are drifting toward it. (This drift under an r.f. field even when there is no constant bias potential, is superposed on the rapid oscillation back and forth of the electrons under the r.f. field, and is due to the phasing of the electron with respect to the alternating field at the instant the electron is born. Both magnitude and direction of the drift are determined by this phase.) Proper phasing might possibly be accomplished by simple reflecting electrodes, or by some sort of reflex Klystron action, but a reflecting well of parabolic shape would seem to be better.

5. Control of Ion Extraction. Another factor of importance is to maintain control of the ionization and extraction processes by the electric fields. This almost implies that formation of a plasma must be prevented. (Take the definition of a plasma as a region of gas where on the average the density of positive and negative charges is equal.) A major disadvantage of a plasma is that electric fields cannot penetrate beyond the inner surface of the sheath surrounding the plasma to extract or control any of the ions or electrons there. The plasma occurs at a potential maximum and there the useless low energy electrons are trapped; they, in turn, hold onto the positive ions. However, by sufficiently high applied fields, the sheath region may be thickened until the plasma is dimpled inward or no longer exists and the ions may be controlled or extracted. The greatest disadvantage of a plasma, and at the same time one of its good features, is that plasma oscillations occur. The oscillations of electron plasma are of frequency $\nu_e = 8980. \sqrt{n}$ where n is the number of trapped electron/cm^3. A usual value for n is 10^{10} or 10^{11}, giving a frequency of 300-1000 MC/sec roughly. The plasma oscillations of positive ions are of much lower frequency, the maximum being of frequency

$$\nu_p = \left[\frac{(e/m_e)}{(q_p/m_p)}\right]^{1/2} \nu_e = \frac{1}{60} \text{ x electron frequency for ions of } q/m = 1/2^{13}.$$

These plasma oscillations do not depend on the presence of a magnetic field but, in a magnetic field, the intense local fields they produce cause migration of the electrons or ions across the magnetic field. Thus, the collimating effect of the magnetic field on which we depended to hold onto ions and electrons, is completely lost. A good feature of these plasma oscillations is that they modify the energy of electrons passing through the plasma, decreasing the energy of some and adding a corresponding amount to the energy of others, so that you may get energies capable of ionizing carbon completely with much less than the required ionizing potential across the discharge.

A parabolic potential well, like that discussed above for electrons, may be used in the absence of a plasma to hold positive ions and permit establishment of a stationary chain process. Then, if r.f. is applied of the proper frequency for linear resonance of ions with $m/q = 2$, these ions may be extracted while the incompletely stripped ions are left behind. If it proves impracticable to set up linear resonance for both electrons and positive ions, it may be of more advantage to resonate the positive ions and to provide merely reflux, without energy regeneration, for the electrons, which would be dumped when their energy fell below ionizing value.

Experimental Ion Source Designs. 1. Linear Resonance of Electrons and Ions. Linear resonance may be applied both to electrons and to positive ions of the desired charge to mass ratio. The parabolic d.c. potential wells are established by means of rings (aperture lenses) connected together by high resistances to give the parabolic distribution. They are capacitively coupled together closely enough that each side of the potential well acts as a unit with respect to r.f. The r.f. of small amplitude is applied across the gap at the apex of the parabola and acts to give a small acceleration to the electrons each time they cross the apex in phase. The gas pressure must be low enough that the electrons gain the desired ionizing energy from successive crossings before they undergo a collision with a gas atom.

What appears to electrons as a potential well is a ridge to positive ions. Therefore, to hold positive ions we need a reversed potential well, and to resonate completely ionized ions in order to extract them we need r.f. of appropriate frequency. The r.f. applied across the apex must be of much lower frequency than that for electrons. Notice that the r.f. for electrons is of so high a frequency that positive ions see only the average value, while the frequency to resonate positive ions appears as quasi-static to electrons. A well for holding positive ions may be placed between two electron wells as sketched in Fig. 14.

2. Source Using E-type r.f. Discharge with Phased Reflection. In a linear electric-field r.f. discharge, electrons have oscillatory kinetic energy and ambi-polar drift kinetic energy. The oscillatory kinetic energy is the same for all electrons; it varies from zero to $1/2\ m\ x_0^2\omega^2$ in a quarter cycle, where $x_0 (\equiv e/m \times E_0/\omega^2)$ is the amplitude of oscillation. E_0 is the amplitude of the oscillatory electric field strength. The next quarter cycle the kinetic energy falls back to zero. The velocity builds up and falls off in the opposite direction during the following half cycle. Energy cannot be supplied accumulatively. The desired energy for ionizing must be put into the electron each cycle.

The drift kinetic energy varies for different electrons, depending on the instant of their birth, i.e., when they are first subjected to the r.f. The maximum drift velocity, which occurs for those born just when the electric field is passing through zero, is equal to the maximum of the oscillatory velocity. Those born when the electric field is a maximum have no drift velocity.

It can been seen that in the r.f. discharge, where there is no accumulation of energy, the conditions for getting electrons of high ionizing energy are much more severe than in the linear resonance process, where the energy is supplied stepwise. We want oscillations of small amplitude in order to get a long path length in the gas before the electrons leave at one end or the other. Small

amplitude of oscillation implies high frequency and, consequently, only a short time for the electron to accumulate energy under a given amplitude of the r.f. electric field strength. Hence, E_0 must be raised to as high a value as possible. For example, if we wish the time- and ensemble-average of kinetic energy for the electrons to be 1000 volts (twice the ionizing potential needed to remove the last electron from carbon), while keeping the amplitude of oscillation down to 1 cm, we require a frequency of 265 mc/sec and an amplitude of 1580 volts/cm for the r.f. More energy or shorter oscillations fast become prohibitive.

If the electrons are lost when they drift to either end of the discharge, we have a considerable power drain and also we are forced to maintain a high gas pressure (of the order of 10^{-2} mm Hg) in order to get an adequate number of ionizing collisions to replace the electrons lost. If we can get a reflection of the electrons at each end of the r.f. discharge in such a phase that the r.f. field will then pick up the electrons and accelerate them toward the other electrode, we can maintain high electron density with low gas pressure and low power drain. Reflection can be obtained by a d.c. potential well. The optimum reflection conditions differ for electrons of different drift velocities, but the best solution seems to be reflection by a parabolic well adjusted to give emergence half a cycle of the r.f. after entering.

The r.f. discharge may be made symmetric about a middle electrode, with both end electrodes at ground potential, as shown in Fig. 15. A small negative d.c. bias on the center electrode would provide a well for holding the positive ions, which could be extracted out the side of the ion source.

References

[1] E. S. Lamar and O. Luhr, Phys. Rev. 46, 87 (1934).
[2] Engle and Steenbeck, Elektrische Gasentladungen 2, 43 (1932).
[3] H. D. Smyth, Rev. Mod. Phys. 3, 389 (1931).
[4] Planiol, Annales de Physique 9, 176 (1938).
[5] Scott, Phys. Rev. 55, 954 (1939).
[6] F. M. Penning and J. H. Moubis, Physika 4, 1190 (1937).
[7] A. T. Finkelstein, Rev. Sci. Instr. 11, 94-97 (1940).
[8] H. Heil, Zeitschrift f. Physik, 120 212 (1943).
[9] Bayly and Ward, Canadian Journal of Research, Sec. A, 26 69-78 (1948).
[10] G. Mierdel, Annalen der Physik 85, 612 (1928).
[11] A. M. Skellett, Journal of Applied Physics, 19, 187 (1948).
[12] H. Alfven and H. J. Cohn-Peters, Arkiv for Matematik, Astronomi och Fysik 31A, No. 18 (17 pages) (1944)
[13] Tonks and Langmuir, Phys. Rev. 33, 195 (1929)

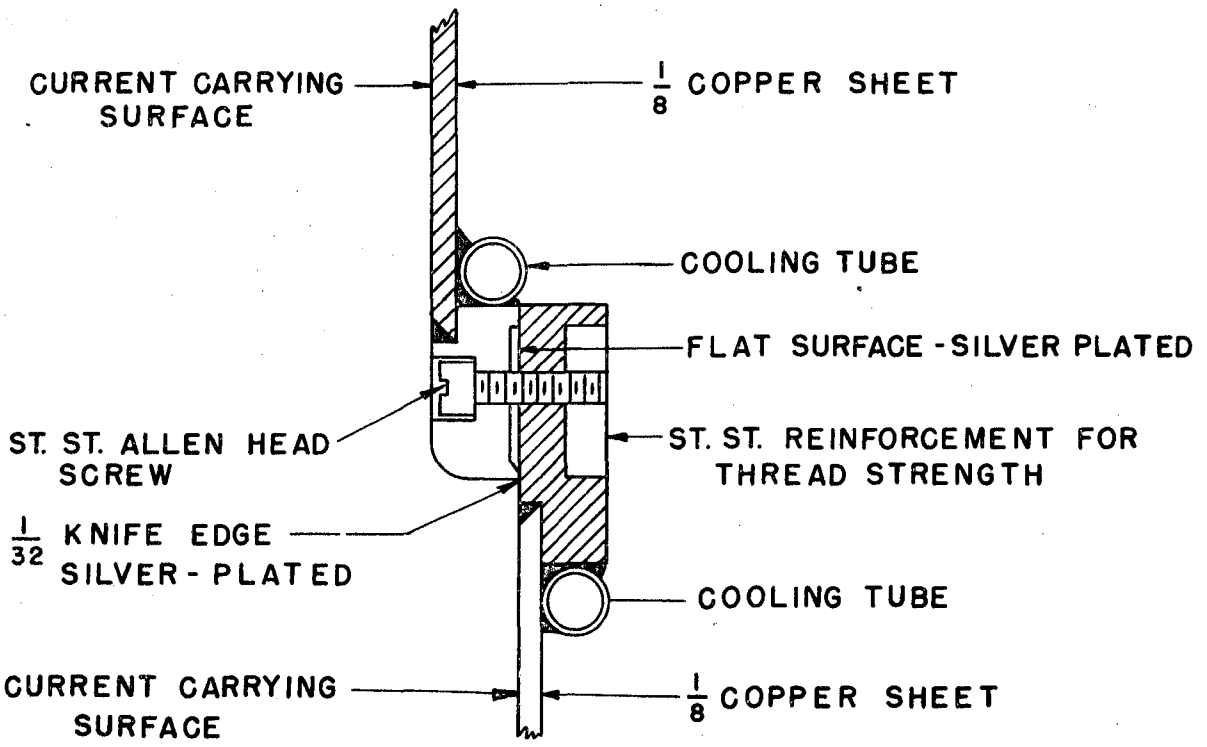
CURRENT CARRYING SURFACE
1/8 COPPER SHEET
COOLING TUBE
FLAT SURFACE - SILVER PLATED
ST. ST. ALLEN HEAD SCREW
ST. ST. REINFORCEMENT FOR THREAD STRENGTH
1/32 KNIFE EDGE SILVER - PLATED
COOLING TUBE
CURRENT CARRYING SURFACE
1/8 COPPER SHEET

FIG. 1

Mu-40

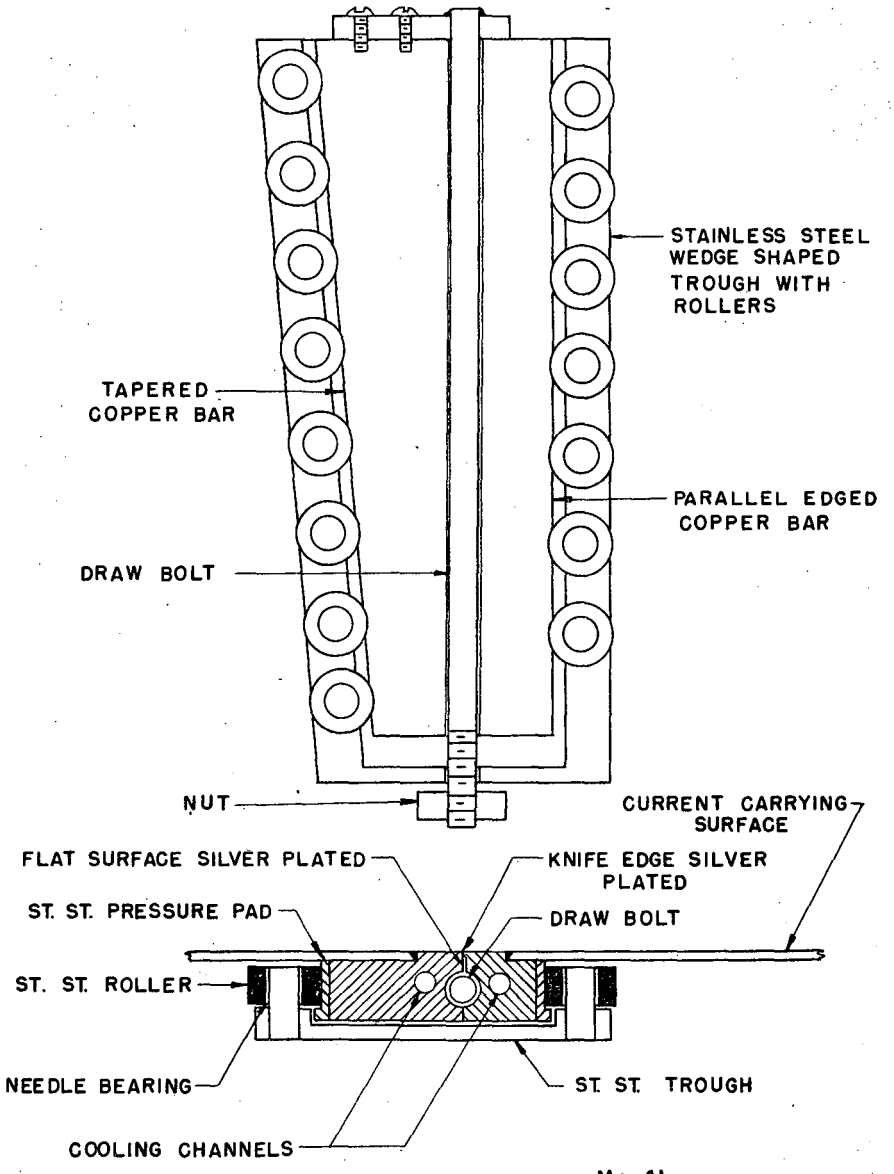

FIG. 2

Mu-41

14630-1

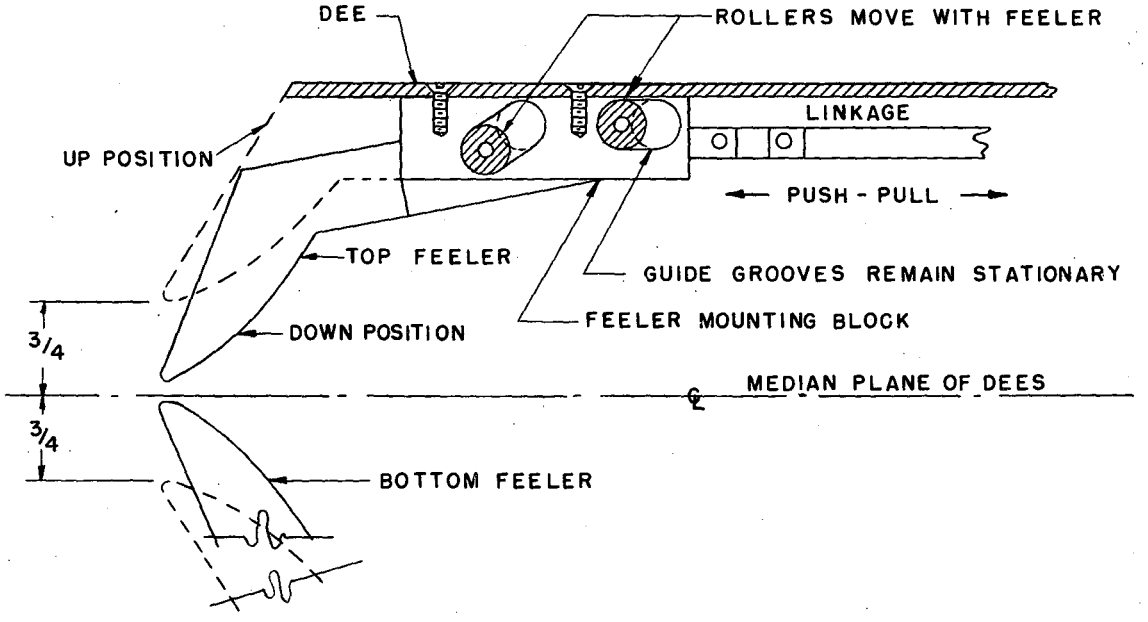

FIG. 3 Mu-42

14631

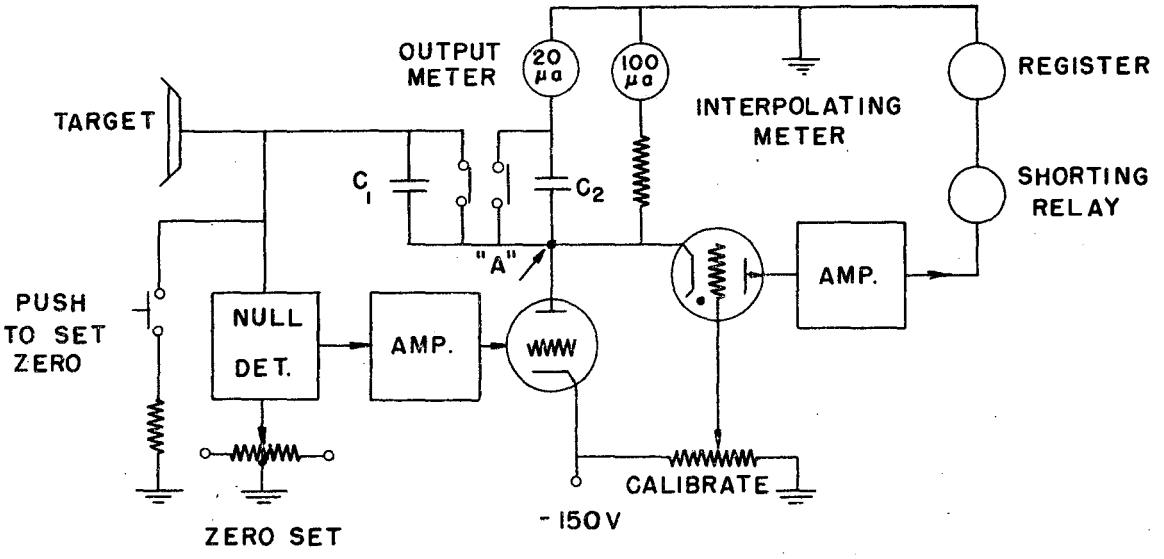
OUTPUT METER
20 μa
100 μa
INTERPOLATING METER
REGISTER
TARGET
C1
C2
SHORTING RELAY
"A"
AMP.
PUSH TO SET ZERO
NULL DET.
AMP.
CALIBRATE
ZERO SET
-150V

Mu-43

FIG. 4

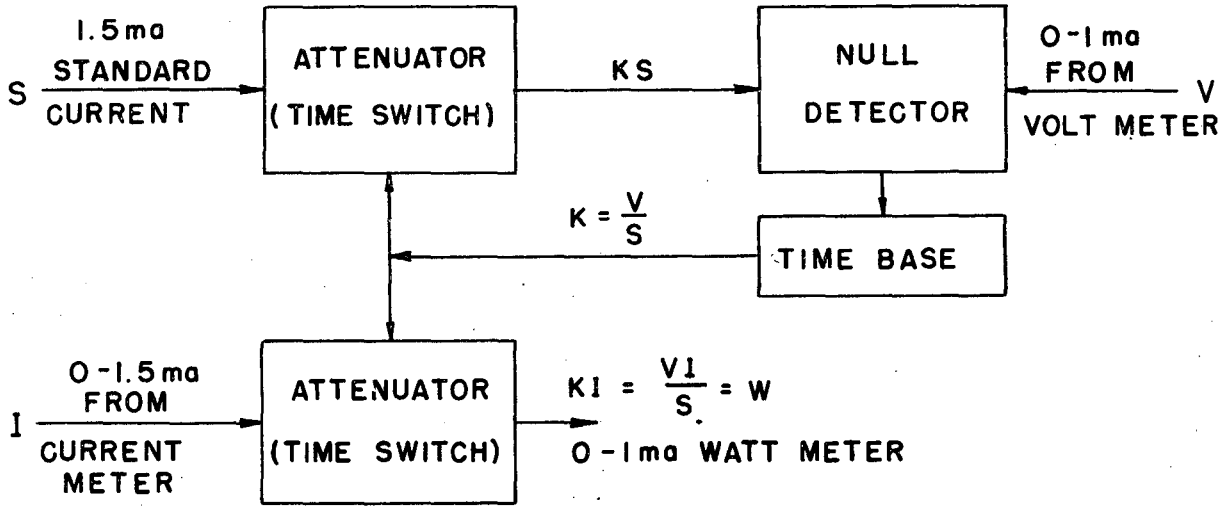
1.5 ma
STANDARD
S
CURRENT
ATTENUATOR
(TIME SWITCH)
KS
NULL
DETECTOR
0-1 ma
FROM
V
VOLT METER
K = V/S
TIME BASE
0-1.5 ma
FROM
I
CURRENT
METER
ATTENUATOR
(TIME SWITCH)
KI = VI/S = W
0-1 ma WATT METER

Mu-44

FIG. 5

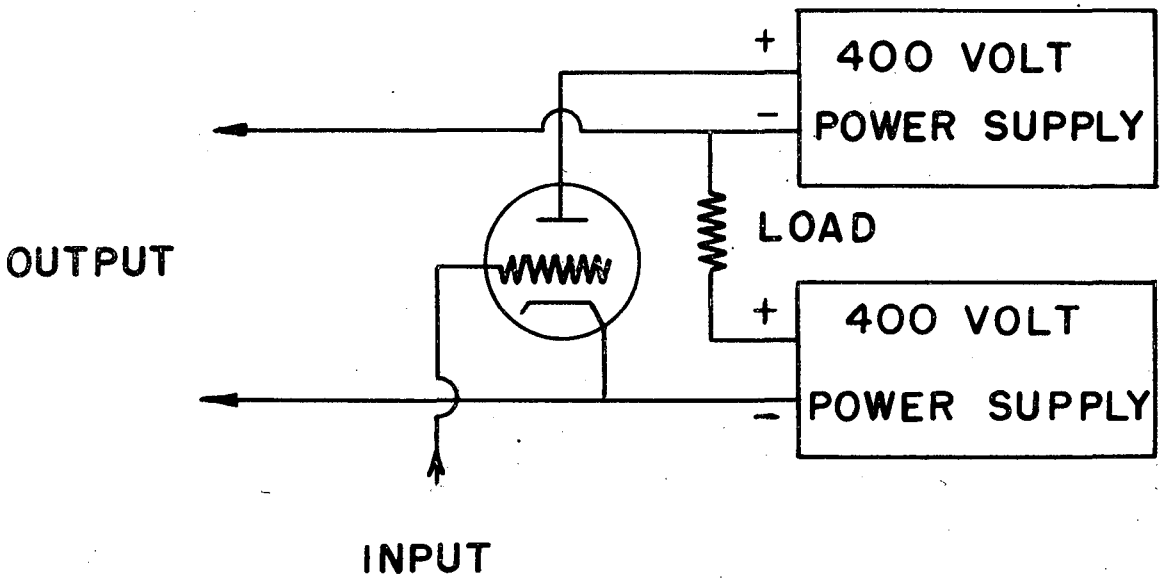
+
400 VOLT
POWER SUPPLY
−
LOAD
OUTPUT
+
400 VOLT
POWER SUPPLY
−
INPUT

Mu-45

FIG. 6

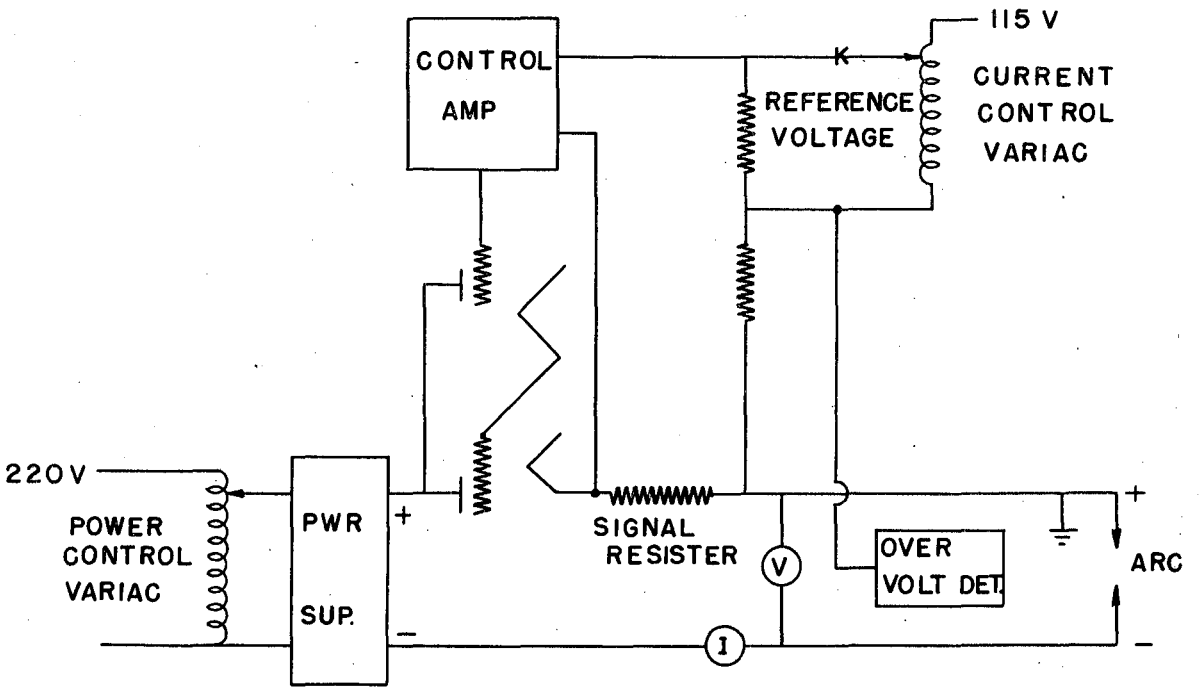
CONTROL
AMP
115 V
CURRENT
CONTROL
VARIAC
REFERENCE
VOLTAGE
220V
POWER
CONTROL
VARIAC
PWR
SUP.
+
−
SIGNAL
RESISTER
V
OVER
VOLT DET.
I
ARC
+
−

FIG. 7 Mu-46

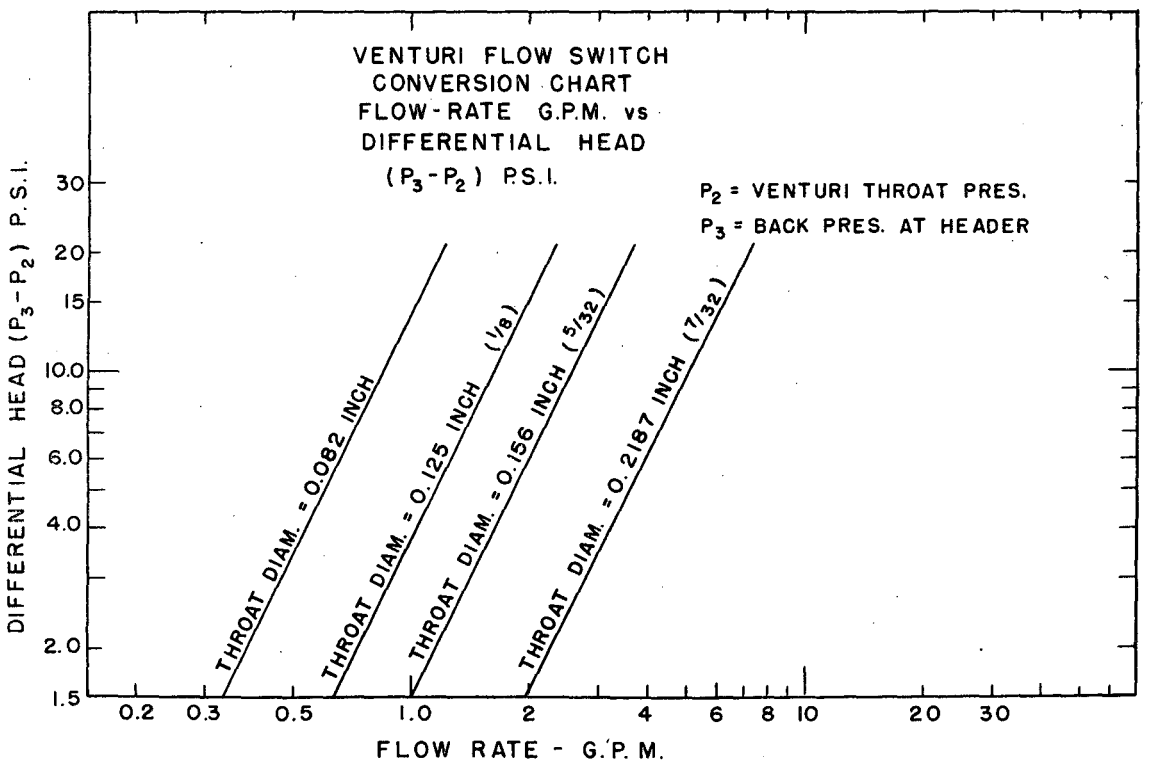

FIG. 8

Mu-47

14636-1

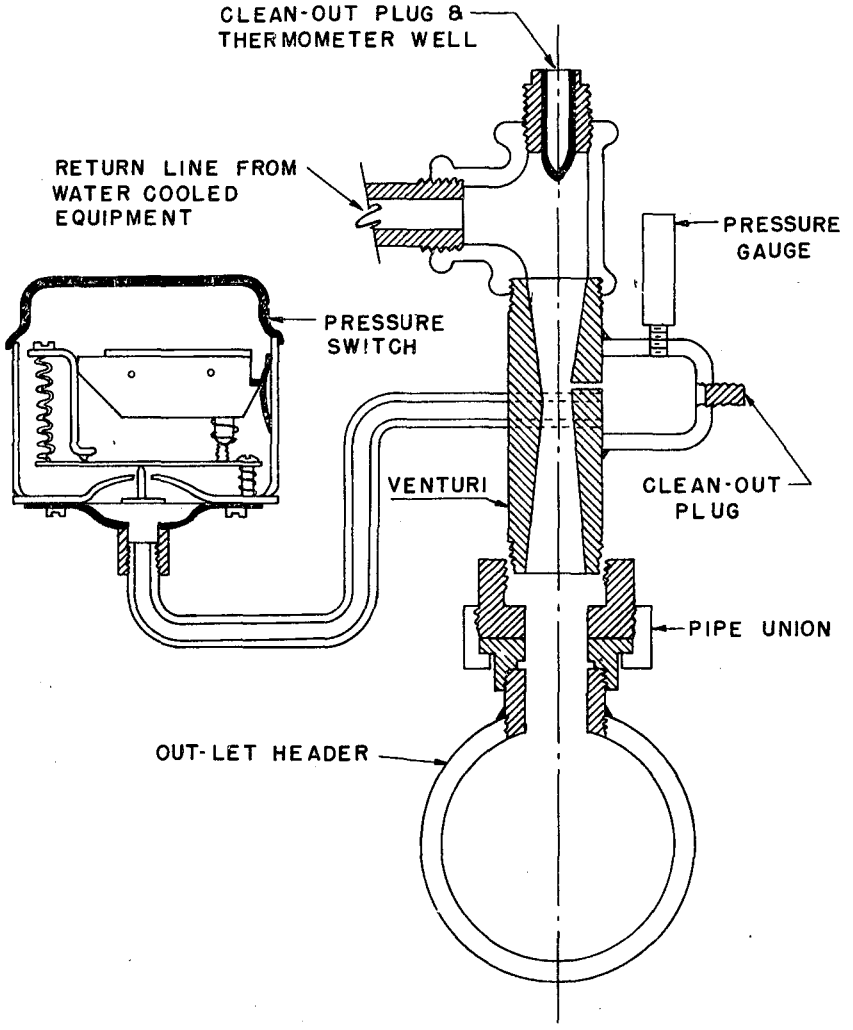

Mu-48

FIG. 9

14637

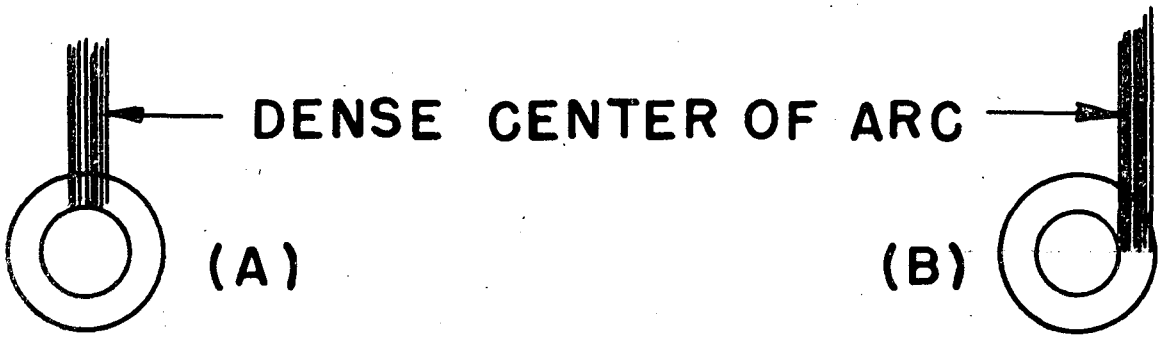

SIDE VIEW OF CENTER TURN

FIG. 10

Mu-49

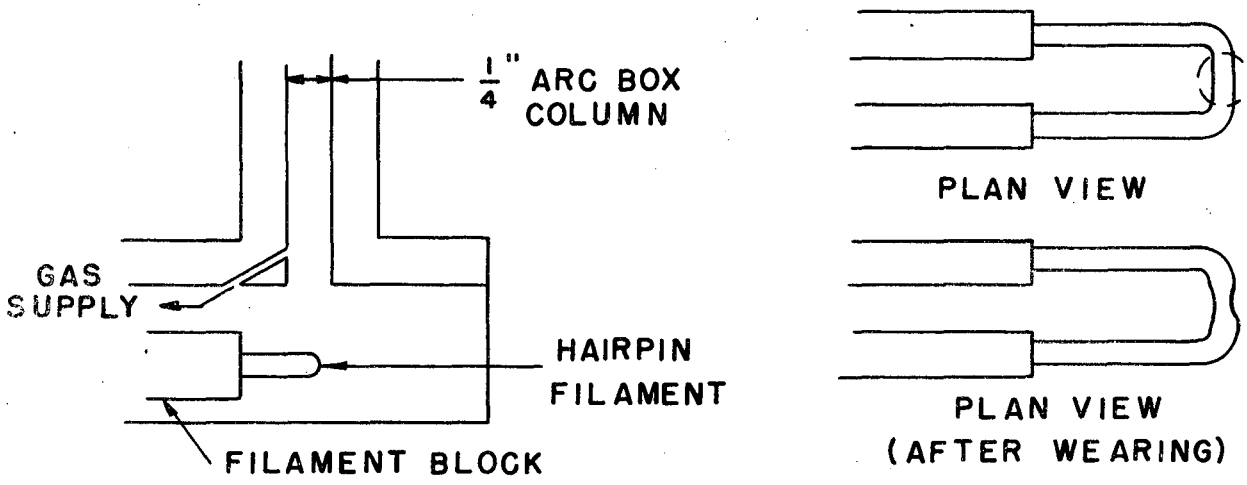
1/4" ARC BOX COLUMN
GAS SUPPLY
HAIRPIN FILAMENT
FILAMENT BLOCK
PLAN VIEW
PLAN VIEW (AFTER WEARING)

FIG. 11

Mu-50

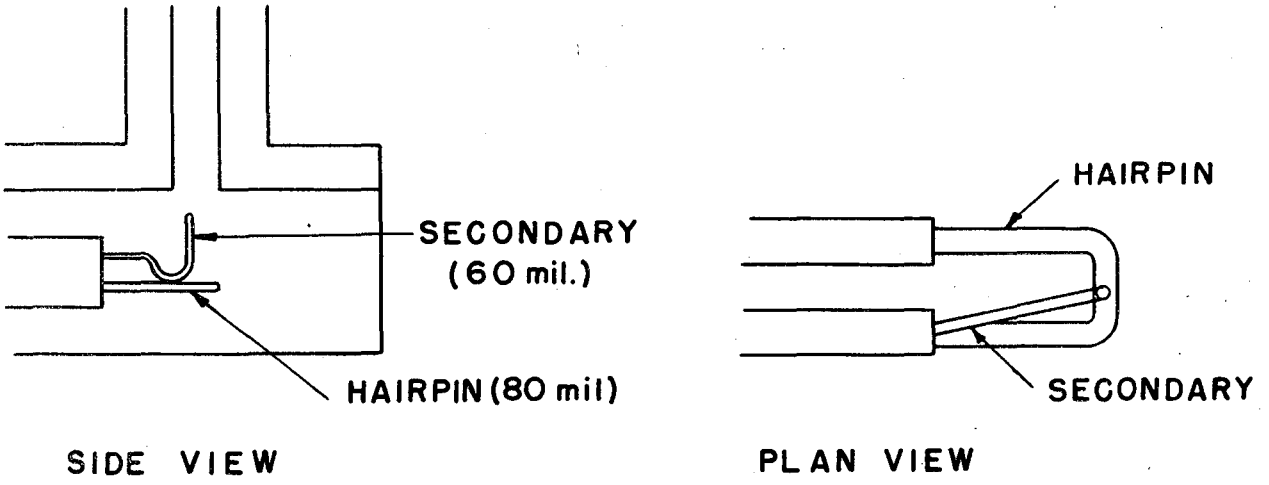
SECONDARY
(60 mil.)
HAIRPIN (80 mil)
SIDE VIEW
HAIRPIN
SECONDARY
PLAN VIEW

Mu-51

FIG. 12

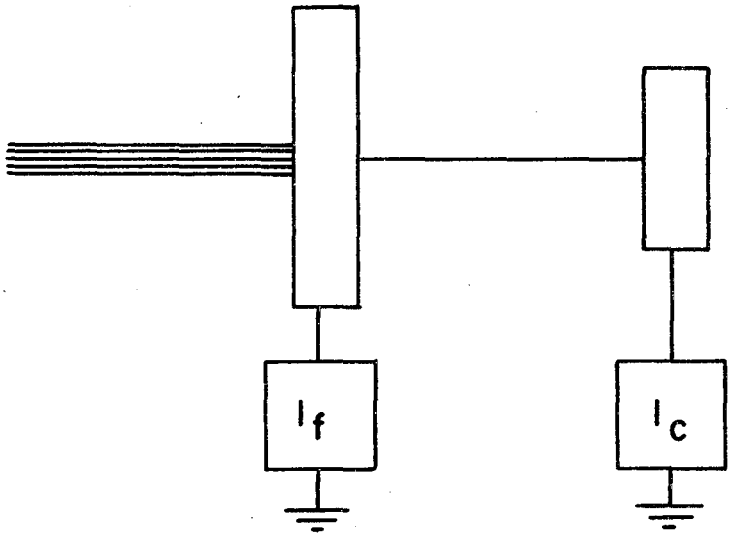

Mu-52

FIG. 13

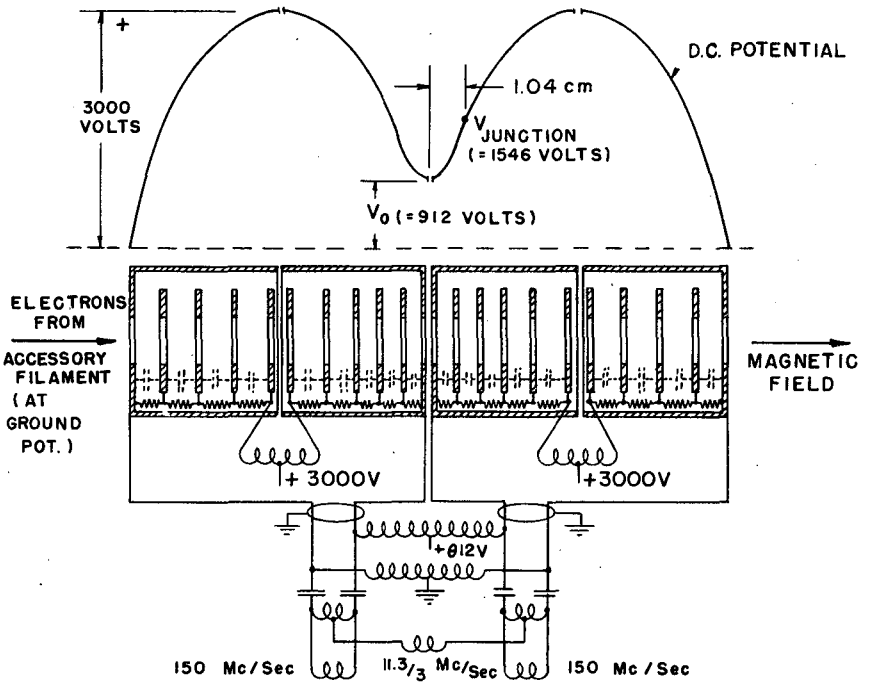
+
3000 VOLTS
D.C. POTENTIAL
1.04 cm
V JUNCTION (=1546 VOLTS)
V0 (=912 VOLTS)
ELECTRONS FROM ACCESSORY FILAMENT (AT GROUND POT.)
MAGNETIC FIELD
+3000V
+3000V
+812V
150 Mc/Sec
11.3/3 Mc/Sec
150 Mc/Sec

Mu-53

FIG. 14

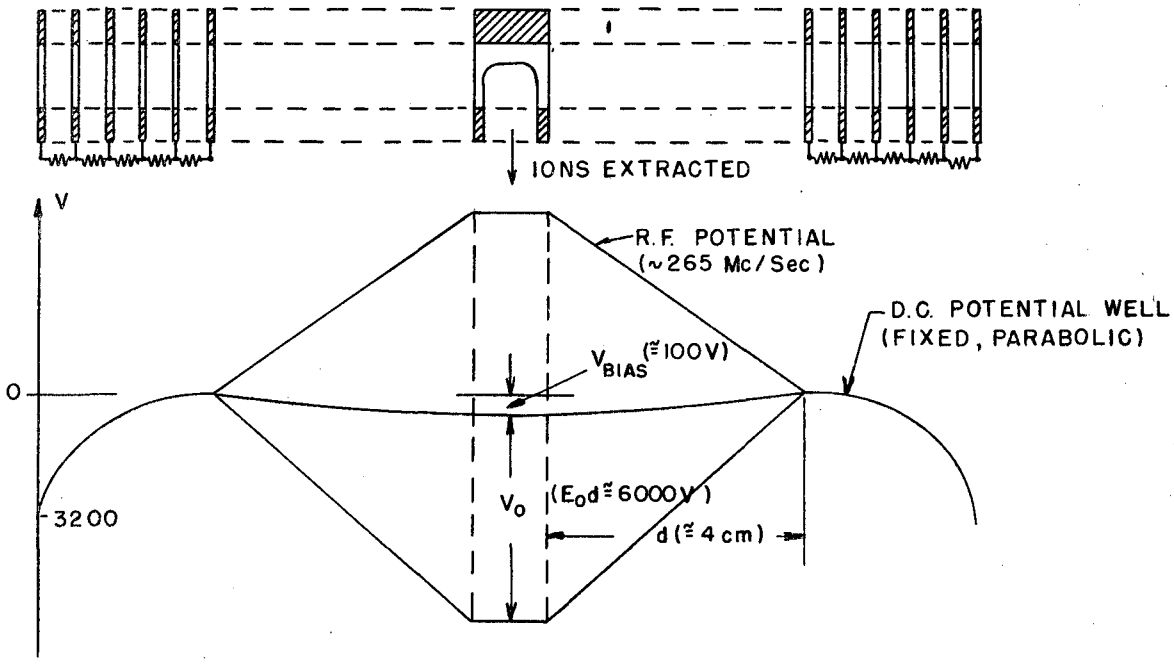
IONS EXTRACTED
V
R.F. POTENTIAL
(~265 Mc/Sec)
D.C. POTENTIAL WELL
(FIXED, PARABOLIC)
V_{BIAS} (≅100V)
0
V_0
($E_0 d$ ≅ 6000V)
-3200
d (≅ 4 cm)

Mu-54

FIG. 15

3. Synchrotron

Walter D. Gibbins

In general the performance of the machine has been, during this report period, satisfactory as to gamma-ray intensity and stability of operation. The average beam output has been maintained at approximately 1500 R/hr at the center of the beam one meter from the target, measured with an ionization chamber behind 1/8 inch of Pb. The experimental program has proceeded quite well with this intensity available, especially during experiments involving counters. Additional intensity is still desired for induced activity experiments, but counting rates of yields of gamma induced nuclear reactions are quite satisfactory.

New additions to the synchrotron which have affected operation include the installation of a line voltage regulator on the 12 kv line service to the laboratory and lowering of the transformer taps to normal settings. These changes have aided the accomplishment of less erratic operation.

As was stated in the last report, an electronic switch has been installed in the injector filament supply. In the past, considerable trouble has been encountered from injector filament distortion, especially toward the end of filament life. Warped shapes of several filaments were noted which had definitely changed the virtual focus of the injector accelerating system and caused a drop-off in gamma intensity. These changes in shape occurred at random with considerable frequency and caused much operating difficulty because of not being able to maximize intensity; especially critical were the injector position adjustments. It was thought that interaction of the 60 cycle a.c. filament current electromagnetic field with the 30 cycle field of the synchrotron might be contributing to the warping. The installation of the switching device cuts off the filament current a few microseconds before the leading ignitrons fire at the start of conduction of magnet current for the first half cycle. This procedure is possible in the case of the pulsed operation on a 6 per second repetition rate and has resulted not only in about 50 percent longer life for injector filaments but also seems to enhance evenly distributed erosion of the filament and maintenance of constant shape. A new record for injector life was set with a single unit which was used in the machine from the 2nd of January to the 31st of January with approximately 300 hours of operation on the filament. A new injector of design incorporating a dispenser type oxide cathode is being tested and is expected to yield higher beam intensities.

Installation of the magnetic field phasing monitor is complete and is now in use. This apparatus consists of 16 Permalloy core peaking strips mounted in vertical pairs on 45° spacing at the center of each octant of gap flux. The earliest signal from these peaking strips is used to trigger a fast sweeping oscilloscope and signals from the others alternately connected to the Y deflection plates. Observing the time these signals arrive measures the lag in the flux in the center of the compensating octants. By accurately calibrating peaking strip bias with time, it is possible to record conditions for a usable magnet compensation. Upon occasions, recently, the synchrotron beam has suddenly disappeared upon loss by mechanical breakage of the radial magnet compensating conductors which form a part of the circuit of the flux looping octants used in azimuthal field correction. Although apparatus is available for monitoring octant currents

the exact shift in the timing of the flux in the faulty octant can be seen on its associated peaking strip oscillograms. Close study of these signals has thus far shown no horizontal tilt in the field to occur when unequal compensating currents are run through the loops at the top and bottom of the octants. Such an effect was searched for by observance of the relative time of arrival of equal H on the two identical peaking strips at the octants center, with one peaking strip near the upper pole and one directly below, near the lower. On two occasions all spare radial conductors were open by breakage in two upper octants. Increasing the current in the corresponding lower octants until the peaking strip timing in those octants was restored produced the same intensity gamma-ray beam. In the past, double settings of the same octant current have given equal intensity beams. One of these conditions was observed and the effect on the peaking strip timing noted. As the octant current was varied from one peak intensity setting to the other, the peaking strip signal was seen to depart to a later position and return to its original setting. This is thought to be associated with the inductance of the auto-transformers used to vary the current in the self driven compensating circuits and will be investigated further.

The manner in which the beam is used during counter experiments has resulted in an electronic chassis being fabricated which clips a voltage induced in coil wound around one of the slabs of the magnet yoke and differentiating the clipped waveform to produce a sharp voltage pip at peak magnetic field. When running counter experiments, it is generally the practice to employ a gamma-ray pulse about 2000-2400 μsecs long. This is obtained by decreasing the capacity in the oscillator rectifier circuit and allowing the radiofrequency accelerating voltage impressed across the accelerating gap in the r.f. cavity to decay slowly below the minimum voltage requirement for acceleration in the synchronous orbit. The electron beam spills slowly onto the target and produces a gamma pulse 2400 μsecs long, with its maximum intensity occurring 1200 μsecs before H_{max}. Use of the above pip generator has been very useful in assuring the experimentalist using the beam of its energies at the beginning of the pulse and at its peak intensity. This is done merely by measuring the time from H_{max} as given by the marker generator to the desired time points on a signal from a phototube placed in the gamma beam and displayed on an oscilloscope. 1200 μsecs before H_{max} at 90 electrical degrees of the magnet cycle (30 cycles/sec) represents an energy at peak intensity of the pulse of 327 Mev, only approximately 3 percent below 335. A 2400 μsec wide pulse starts at 307 Mev. To bring the gamma pulse out symmetrically disposed about H_{max}, new equipment has been designed and is now being tested. This apparatus will produce a gamma pulse 3 milliseconds in duration with uniform intensity distribution during the pulse and symmetrically timed with respect to peak magnetic field. The pulse duration will be adjustable from the 3 milliseconds between 90 ± 25 electrical degrees and the sharp 10 μsec pulse available under standard r.f. voltage conditions. It is planned to modulate the accelerating voltage in accordance with a complex waveform based on minimum voltage for synchronous orbit acceleration, rate of change of magnetic field, and electron energy loss due to radiation during acceleration.

A thin window ionization chamber (representing only a total of .006 in. of aluminum) has been placed in the beam for purposes of integrating total gamma radiation. This apparatus charges a capacitance to a given voltage and cycles a register at the end of each charging. The device has been calibrated against equipment which was used to obtain data on the transition curves in lead, aluminum

copper and graphite. Its performance has been very dependable, repetitious, and of great value in integrating equal amounts of radiation.

A forced shutdown occurred in the month of January due to the failure of one of the load sharing reactors used to effect current sharing between the two first half cycle ignitrons. A short to the core from one of the windings developed but after repair gave trouble because of turn to turn shorting of an intermittent nature. This resulted in a perturbation of the magnet flux during the betatron period and caused very erratic operation for a day or two. After much trouble the cause was located and since rewinding with additional inter turn insulation was not feasible, thyrite discs were added in parallel with each half of the winding. This has apparently cured the trouble temporarily and new reactors are being obtained.

4. Linear Accelerator and Van de Graaff Machines

W. K. H. Panofsky

During the quarter year covered by this report the useful operating time of the linear accelerator was 40.5 percent. In view of the fact that the machine was out of operation for the entire month of November and until the seventh of December, this percentage does not appear appreciably low. During the last month there was considerable lost time due to failures of equipment in the Van de Graaff high voltage end. The pulser gave trouble several times and the probe shorted once. A light bulb exploded and was blown throughout the tank causing three days of lost running time. Bake in time was very long and consumed 21 percent of the total available time.

The following steps have been and will be taken to alleviate these difficulties: 1. A dual pulser channel is being constructed to be installed within the next month. With this system it will be possible to have a failure in one pulse chassis channel and switch to another workable one from the outside of the machine without stopping operation. 2. A shield has been placed over the probe insulator to stop ion bombardment of the insulator and subsequent failure. 3. Bake in time will be shortened, presumably, by sandblasting and painting the main Van de Graaff shell inside so that rust no longer forms and has to be transferred. Also a new 350 CFM Kinney pump is being installed in the gap house, which it is hoped will provide a much higher overall pumping speed than the present system. With the coated tank and better pump it will be possible to cut the bake in time down to a maximum of 2 hours.

5. Bevatron Development

W. M. Brobeck

Bevatron. Steel plates for the magnet core started arriving in the Bay Area at the end of November and approximately 3000 tons had been cut and drilled by the end of January. Assembly into slabs is expected to start in February.

Design of the sample vacuum tank section has been completed and drafting is in progress on the magnet coils and the injector linear accelerator. The 500 kv power supply for the injector ion gun is in the shop, other parts of the ion gun are substantially complete.

The building foundation walls and footings were substantially complete by the end of December. Structural steel, delayed by the steel strike, is expected to arrive on the site by the middle of February.

LMB/3-14-50
Information Division