UCRL 634
cy 2

UNIVERSITY OF CALIFORNIA

Radiation Laboratory

TWO-WEEK LOAN COPY

This is a Library Circulating Copy
which may be borrowed for two weeks.
For a personal retention copy, call
Tech. Info. Division, Ext. 5545

BERKELEY, CALIFORNIA

DISCLAIMER

This document was prepared as an account of work sponsored by the United States Government. While this document is believed to contain correct information, neither the United States Government nor any agency thereof, nor the Regents of the University of California, nor any of their employees, makes any warranty, express or implied, or assumes any legal responsibility for the accuracy, completeness, or usefulness of any information, apparatus, product, or process disclosed, or represents that its use would not infringe privately owned rights. Reference herein to any specific commercial product, process, or service by its trade name, trademark, manufacturer, or otherwise, does not necessarily constitute or imply its endorsement, recommendation, or favoring by the United States Government or any agency thereof, or the Regents of the University of California. The views and opinions of authors expressed herein do not necessarily state or reflect those of the United States Government or any agency thereof or the Regents of the University of California.

COPY 2

UCRL 634

UNCLASSIFIED

The Scattering of 31.8 Mev Protons by Protons Using Proportional Counter Detectors

By

Lawrence Harding Johnston
A.B. (University of California) 1940
M.A. (University of California) 1950

DISSERTATION

Submitted in partial satisfaction of the requirements for the degree of

DOCTOR OF PHILOSOPHY

in

Physics

in the

GRADUATE DIVISION

of the

UNIVERSITY OF CALIFORNIA

Approved:

. . . . . .

. . . . . .

. . . . . .

Committee in Charge

Deposited in the University Library . . . . . .
Date Librarian

ACKNOWLEDGMENTS

The author wishes to express grateful appreciation, first of all to his colleagues in performing this work, Mr. Bruce Cork and Dr. Chaim Richman. Many thanks are due to Mr. Edward Day, who did the mechanical design on the scattering chamber and many other parts of the equipment, and to Mr. John Harvie's shop for careful construction of the apparatus, and to Mr. Harold Howarton's welding shop.

The linear accelerator crew, particularly Messrs. Wendell W. Olson, Albert J. Bartlett, Wilfred P. Kimlinger, James A. McFaden and Richard Crawford, contributed much to the success of the experiment by careful operation of the machine.

We wish to thank Prof. Robert Serber, Dr. Geoffrey Chew, Mr. Richard Christian and Mr. Pierre Noyes for many helpful discussions of the work, and Mr. Franklin Fillmore for developing an analytic approach to the solid angle calculations of the geometry.

Mr. Lee Aamodt developed the beam integrator used to measure the incident protons; this fine instrument was very accurate, and was a pleasure to use.

It is impossible for the author fully to express his appreciation to Prof. Luis W. Alvarez; in addition to suggesting this problem and making its prosecution possible by leading in the development of the linear accelerator, he has been a lucid teacher, wise counsellor and sincere friend.

It is a pleasure to thank Prof. E. O. Lawrence for continued encouragement and interest in the work.

This work was performed under the auspices of the Atomic Energy Commission.

CONTENTS

	Page
INTRODUCTION	1
EXPERIMENTAL ARRANGEMENT	4
SCATTERING CHAMBER	5
ALIGNMENT OF APPARATUS	7
PROPORTIONAL COUNTERS	9
ELECTRONIC CIRCUITRY	10
BACKGROUND EVALUATION	12
ADJUSTMENT OF COUNTERS - COUNTING EFFICIENCY	16
MEASUREMENT OF INCIDENT PROTON FLUX	17
MEASUREMENT OF INCIDENT PROTON ENERGY	19
HYDROGEN GAS SUPPLY	20
ANALYSIS OF GEOMETRY	21
EVALUATION OF FALSE SCATTERING EFFECTS	24
PROCEDURE	26
RESULTS	28
REFERENCES	32

LIST OF TABLES

Table Page

Proton Scattering Data 34

Thickness of Aluminum Absorbers 35

LIST OF ILLUSTRATIONS

Figure		Page
1.	Plan View of Experimental Layout	37
2.	Proton-Proton Scattering Chamber	38
3.	Photograph of Scattering Chamber	39
4.	Counter Chamber	40
5.	Collimator Disc	41
6.	Beam Integrator, Mechanical	42
7.	Beam Integrator, Electrical	43
8.	Beam Integrator, Photograph	44
9.	Counter Weighting Functions	45
10.	Scattering Equipment	46
11.	Proton-Proton Scattering at 31.8 ± 0.3 Mev	47
12.	Proton-Proton Scattering near 32 Mev	48

INTRODUCTION

The scattering of protons by protons provides data which is of considerable pertinence to our knowledge of nuclear forces, since the process is a particularly simple one involving only two nucleons. It is possible to treat theoretically such a two-body collision with some rigor, and hence the experimental results may be expected to provide an incisive test of current nuclear force theories.

The basic experiment consists in causing a beam of protons to impinge upon an accumulation of relatively stationary protons (hydrogen gas) and to measure the number of protons scattered as a function of the scattering angle.

Proton-proton scattering experiments which had been performed previous to this undertaking[(1)-(13)] used protons of incident energy from 0.5 to 14.5 Mev, and theoretical analysis of the results[(14)-(19)] showed scattering of the S-wave only, which we interpret to mean that at these low energies protons which make a sufficiently close collision to be within the range of the nuclear force have less than one unit of angular momentum, and hence the scattering of the P-wave and waves of higher angular momentum is small. It was very desirable therefore that experiments be made with higher energy protons to see if one could observe the scattering of the higher angular momentum waves, and hence this work was undertaken using the 32 Mev beam of the Berkeley linear accelerator.[(20)]

This machine is very suitable for doing scattering experiments because the beam has an angular divergence of only $\pm 0.05^{\circ}$, so that excellent collimation of the beam is possible without an undue loss

of intensity. The value of this was fully realized when it became necessary to move the scattering chamber 35 feet away from the accelerator, to allow for neutron shielding. A 2-inch evacuated pipe carrying the proton beam was extended completely through a lavatory to the outside of the building, where a temporary shelter was erected in which to place the scattering apparatus.

The design parameters of the experiment were considerably influenced by two ecological factors. First, it was necessary to operate on the minimum possible beam current, since the accelerator was not functioning yet when the scattering apparatus was designed; one had to assume that the beam would at first be very small. Accordingly, a counter geometry was chosen to subtend a large solid angle from the scattering source, and the scattering source was made as long as was consistent with maintaining a small interval of scattering angle for the counters. Secondly, it appeared highly desirable to get a complete set of data in a few hours of running time, since the accelerator was the first of its kind, and was used much of the time for accelerator development experiments. This prompted the use of a system whereby scattering at all angles would be measured simultaneously. How this was achieved will be described in the next section.

Some basic parameters chosen for the experiment are as follows:

Incident Proton Energy	32 Mev
Incident Proton Current	5×10^{-13} amperes
Scattering Material	hydrogen gas
Gas Pressure	one atmosphere
Proton Detector	Proportional counters
Length of Scattering Source	5.38 cm
Scattering Radius	35 cm

As an alternative to using hydrogen gas as scatterer, Wilson[9] has used nylon foil. This has the great advantage of producing a very concentrated source of scattered protons, but the fact that organic scatterers contain carbon and other nuclear species beside hydrogen introduces a large background of unwanted scattered protons. Wilson was partially successful in discriminating against this background by using two proportional counters in 90° coincidence, and he might have been highly successful if he had used electronic circuits of very short resolving time, and made very slow runs. A more basic objection to the use of hydrogenous foil scatterers is that it is difficult to make a thin foil of uniform density over the area of scattering, as is necessary to obtain the absolute value of the scattering cross section. On the other hand, when hydrogen gas is used as scatterer, the number of scattering nuclei per cubic centimeter may be accurately calculated from the gas law, knowing the temperature and pressure.

The pressure of hydrogen gas was made one atmosphere principally for mechanical reasons. Two atmospheres would have given twice the scattering efficiency, but would have required that the entire chamber be reinforced. The entrance foil, which separates the hydrogen gas from the vacuum of the accelerator, would have to be made thicker too, increasing the angular spread of the beam.

No difficulty is caused by the fact that in hydrogen gas protons are associated with hydrogen molecules; the binding energy of the proton in the molecule, and to its electron, is only a few electron volts, as compared to the 16 Mev available in the center of mass system of a p-p collision, for 32 Mev incident protons.

Proportional counters are used as the proton detectors, rather than Geiger counters because of two factors: the former have no

appreciable "dead time", and because they are proportional, they are capable of discriminating between the large proton pulses and a large background of small amplitude pulses. Panofsky and Fillmore[21] have successfully employed photographic emulsions as detectors at this energy.

EXPERIMENTAL ARRANGEMENT

A plan view of the whole apparatus is shown in Fig. 1. Protons emerge from the linear accelerator in a very narrow beam, passing down the center of a two-inch evacuated pipe, through a two-millimeter hole, Aperture A, and into the chamber of an analysing magnet. Energy selection is necessary because under certain operating conditions, the linear accelerator puts out a portion of its protons at an energy considerably below 32 Mev.

The beam passes from the magnet into a fourteen foot collimating tube, consisting of the apertures B and C, having two and five millimeter diameters respectively. These re-collimate the analysed beam to $\pm 0.05^{\circ}$ spread. Aperture C is the last aperture which is struck by an appreciable number of protons; all subsequent apertures are enough larger in size that the main beam passes entirely through them. The reason for having the last effective collimator (C) so far from the scattering chamber is that the protons which get stopped there produce neutrons which cause a serious background in the counters. The intervening space is filled with concrete blocks to absorb and reflect out as many of these neutrons as possible. The "Copper Slab" and "Brass Cylinder" located in and adjacent to the magnet output port are also used as shielding for the neutrons produced near them.

The collimated beam passes cleanly through aperture D, which contains a nylon foil, into the hydrogen gas of the scattering chamber, where a small fraction of the protons (about 10^{-4}) are removed from the beam by p-p collisions; the remainder pass out the back side of the chamber, through a six-foot pipe, and via a 5-mil aluminum foil, into a highly-evacuated beam integrator. Here the protons are stopped in the bottom of a metal cup, and their charge is measured electrically to determine accurately the number of incident protons. More concrete blocks are placed between the beam integrator and the scattering chamber, to shield against neutrons produced in the cup.

An ionization chamber was built into the proton tube just aft of the scattering chamber, to serve as a beam monitor. The indication was put on a meter at the accelerator control desk, to enable the crew to keep the beam steady.

SCATTERING CHAMBER

The details of the scattering chamber are shown in Figs. 2 and 3. Referring to Fig. 2, the protons are incident from the left, having already been well collimated to a beam about 0.7 cm in diameter. The entrance foil is made of two sheets of 0.0002 inch nylon foil, superimposed; considerable strength is required of it because it must withstand the hydrogen pressure of one atmosphere. The nylon sheet is found to have a considerably greater strength against tearing in one direction than in the other, hence the "Grain" in one layer of the foil was turned 90° to that in the other layer.

From the foil, the protons pass down the hydrogen-filled tube containing aperture E, which serves as a baffle against some of the protons scattered in the nylon foil; they then pass through the

"Defining Cylinders", out of the scattering chamber, through the beam-monitoring ionization chamber, and from thence to the beam integrator. A .005 inch aluminum foil of wide aperture separates the gas-filled chamber from the integrator vacuum system.

The entire scattering chamber has cylindrical symmetry about the axis of the incident proton beam; the two coaxial "Defining Cylinders" located at the apex of the chamber, determine the limits of the source of scattered protons, the protons spreading out more or less spherically from this source. The windows of the seven proportional counters lie on zones of a sphere centered about the scattering region, each zone receiving the protons scattered into a given range of angle. This geometry allows the counter to subtend a very large solid angle, of the order of 0.1 steradian, in line with the requirement that a large fraction of the incident beam be scattered and counted. The zonal entrance apertures for the counters are all machined into one thick steel hemispherical shell labeled "Angle Defining Plate" in Fig. 2. Behind this shell is an aluminum hemispherical spinning .025 inch thick, which forms the entrance window of all the counters, separating the argon-carbon dioxide counting gas from the hydrogen-filled chamber.

Fig. 4 is a photograph of the counter chamber with the window spinning removed. The counters are separated from each other by conical sheet aluminum partitions, and the back side of the counters is formed by a hemispherical shell of thick aluminum. Each proportional counter is in the shape of a toroidal shell of rectangular cross section, having a 2-mil tungsten wire as the electron-collecting electrode. The wire is suspended near the center of the torus by means of twelve radial silk threads. For calibration purposes, each counter has a

small window cut into its back side, covered by a thin aluminum foil, to allow beta rays from the outside to be injected.

Since it was desirable to evacuate the scattering chamber and the proportional counter independently, the chamber was designed with a supporting structure of considerable strength. The main body of the chamber is a welded cone of cold-rolled steel 3/8 of an inch thick. Supporting struts were likewise made of welded cold-rolled steel in the form of cones coaxial with the incident beam (Fig. 2). These were spaced at the divisions between counter zones by radial struts which were welded to the center hub. These conical and radial struts are shown in the photograph, Fig. 3. The principal vacuum seal of the chamber is made at the outer rim, where rubber ring-type gaskets seal the counter chamber and the scattering chamber to the counter window spinning.

The whole structure was supported on sliding planes and adjusting screws in such a way that the chamber could be adjusted into alignment with the beam. A shutter, shown in Fig. 2, served to close the aperture between the defining cylinders to cut off the scattered protons when a background count was made. The system for handling the hydrogen gas will be described in a later section.

ALIGNMENT OF APPARATUS

The alignment of the magnet, the various collimating apertures, the scattering chamber, and the beam integrator, was accomplished by a combination of optical sighting and "Beam Sighting" (letting the beam itself demonstrate its path, and moving the apparatus to agree with the beam).

The position of the beam at the exit of the linear accelerator was determined by observing fluorescence cause by the incident protons; the limiting aperture "A" was then inserted at the center of the beam, after which the beam was allowed to enter the analysing magnet. The magnet current was set to give the required angular deflection of the beam, after which the beam position was determined at the exit side of the magnet, and aperture "B" was inserted there. Following the same procedure, aperture "C" was installed, and then apertures B and C determined the axis of the beam through the rest of the apparatus, so the remainder of the alignment was done optically, using a precision engineer's level. Cross-hairs were installed in apertures B, C, and D, in the two defining cylinder faces, and in the rear hub of the scattering chamber. Aperture D may be adjusted relative to the chamber by means of the bolts which fasten the entrance tube to the chamber, and similarly the second defining cylinder may be moved. These two are adjusted to be coaxial with the hub and the first defining cylinder, after which these four points (D, the defining cylinders and the hub) are fixed with respect to the chamber. Next the chamber is moved by means of its adjusting screws so that it is coaxial with the cross-hairs in apertures B and C, still sighting with the level.

Next the beam was allowed to pass into the beam integrator, where its position was determined by exposing an x-ray film. The integrator was moved to center the beam as indicated by the position of the spot on the film. With the scattering chamber evacuated, this spot was a quite well-defined disc, of about 10 mm diameter. When the chamber was filled with hydrogen, the spot became much more diffuse, so it was decided to

to determine the real extent of the beam spread, to make sure it was all getting into the integrator cup. Accordingly nuclear emulsion plates were exposed in the beam integrator cup, so that each individual proton could be counted. Fewer than 0.01 percent of the protons fell outside a 2 cm radius from the center of the beam, indicating an adequate margin, since the cup is 7 cm in diameter. It is believed that the scattering chamber was lined up with the beam axis to within ± 0.010 in. at each end of the chamber.

PROPORTIONAL COUNTERS

Because of the unusual shape of the counters used in this experiment (see Figs. 2 and 4), a separate test counter of the same toroidal shape was constructed and tested. Thin mica windows were cemented to the walls at a number of places, to permit injection of alpha particles at almost any position relative to the collecting wire. A well-collimated source of americium alpha particles was used for the test; the source was first aimed at the center of the counter, then at the edge to represent two extreme paths which protons might take in the scattering chamber. The pulse heights produced by these extreme geometries did not differ by more than a factor of two; this would indicate that in actual use, if the gain were turned up more than a factor of two above the threshold for counting protons, all the protons should be counted. This test served as a design indication only, and was not relied on as a positive evidence of counter efficiency in the experiments.

Argon gas with 1 1/2 percent carbon dioxide was used to fill the counter, at about 1/3 atmosphere pressure. With a 2-mil tungsten wire as the electron-collecting electrode, operating at about + 1300 volts, the gas multiplication is 100. This wire is supported, as previously

mentioned, by twelve radial silk threads so as to be in the shape of a regular 12-sided polygon; the fact that the wire is not everywhere centered in the counter torus was shown to have negligible effect on the gas multiplication, by pulling the wire off center in the above-mentioned test counter.

Additional aluminum absorbers were placed in the windows of the 15°, 21°, 27°, and 33° counters, in order to discriminate against counting protons whose energy was considerably lower than that expected from p-p encounters at the given angle.* The total absorber thickness in each window is listed in Table II, and is comprised of the .025 in. aluminum spinning plus any extra aluminum placed behind it. The design is to allow p-p scattered protons to enter the counters with at least 3 Mev energy. The aluminum window itself limits the minimum energy to 11 Mev in the 45° counter, and in the 51° counter some of the protons do not even get through. Hence data from the 51° counter was not used in the results. 90° coincidence data was obtained between the 39° and 51° counters and the two halves of the 45° counter, in another experiment performed with this apparatus, and described elsewhere.[23]

ELECTRONIC CIRCUITRY

The decision to measure scattering at all angles simultaneously required a considerable multiplicity of counters and associated circuits, but the gain was two-fold: first, it speeded up by a factor of seven our taking of data; second, it gave a complete scattering curve based on one measurement of incident beam, making the accuracy of the relative

---

* The energy of protons scattered at an angle θ to the incident beam of energy E_0 is

$$E_\theta = E_0 \cos^2 \theta$$

cross section measurement independent of the accuracy of beam measurement.

The 39°, 45°, and 51° counters were divided azimuthally into two halves, the counts from each half being recorded separately. This was done principally to make possible the 90° coincidence experiment but it also provided a check on systematic errors in setting up the counter potentials and on symmetry of the geometry.

The signals from the proportional counter electrodes are brought out of the counter chamber through Kovar-glass seals surrounded by guard-rings, to the input of amplifiers which are mounted directly on the hemispherical surface of the counter chamber, as indicated at the top of Fig. 2. Each of these compact amplifier units has three stages of voltage gain and a cathode follower, which provides pulses of several volts amplitude to operate discriminating and scaling units. The maximum gain of the amplifiers is about 3000, and the bandwidth is approximately 0.9 megacycles.

Seven angles are measured simultaneously and three of these are split into two parts as mentioned previously, making a total of ten pulse channels, and requiring ten amplifiers. The output from each amplifier operates a 5-tube channel consisting of a variable discriminator, "gate" tube and scale-of four, with mechanical register. The gating function is used to desensitize the scaling circuit except during the pulses of beam from the accelerator, in order to reduce the background due to cosmic rays and the 184-inch cyclotron. Since the accelerator produces beam pulses 300 microseconds long, fifteen times per second, the scalers can be kept turned "off" for 99.5 percent of the time.

The resolving time of the entire channel was 5 microseconds, as measured by a double-pulse signal generator; corrections were accordingly made in the registered counts, amounting to a maximum of 2 percent for the 33° counter, which had the highest counting rate. Another consideration was the resolving time of the mechanical registers; they are known to be reliable for counting at 15 per second (the repetition rate of the accelerator) but it was necessary to insure that the register would very seldom receive two impulses during the same 300 microsecond beam interval. The proton beam was adjusted so that on the busiest channel, the average counting rate was about seven protons per second; scaled x1/4, this amounted to 1/8 of a pulse on the register per pulse of the accelerator. This causes a probability of about 1.2×10^{-3} of missing each impulse on the register. In addition to the ten channels operated to count protons, an additional counter of similar construction was built and used to monitor the background in the vicinity of the scattering chamber; its function will be described in a later section.

The collecting voltages for all the counter wires were obtained from a master stabilized power supply of adjustable voltage; the potential for each counter was tapped separately from a potentiometer on the power supply. Thus the relative voltages on the individual counters could be changed to adjust the gas multiplication to be about the same for each counter; and the adjustment of the master power supply voltage was used as a master gain control for all the counters.

BACKGROUND EVALUATION

Reduction of background counts was the greatest single difficulty encountered in doing this experiment and it is felt that anyone starting

to work with protons of this energy or above would do well to use coincidence counter telescopes, and fast circuits. We were able to obtain data with a background of about 20 percent by a careful job of shielding against x-rays and neutrons. Of this background, about 1/4 is caused by x-rays and 3/4 by neutrons.

The x-rays are generated by stray electrons accelerated to a few hundred kilovolts between the drift tubes of the accelerator. These were effectively reduced by covering the scattering chamber with 3/8 in. of lead. The neutrons are produced wherever the beam strikes matter, with only slight dependence on the nuclear species. Rough experiments indicated that lead and bismuth gave approximately 1/2 the background effect observed in carbon, copper or aluminum, and hence lead was used to stop the protons wherever practicable. A typical collimator disc is shown in Fig. 5 where most of the protons to be rejected by the disc strike the lead facing, while the hole itself is lined with a thin collar of copper to reduce scattering from the collimator edge.

The neutron flux at the counters is greatly reduced also by arranging the collimating system so that all protons to be rejected are stopped at some distance from the counters, and several feet of concrete are interposed between the counters and the last collimating disc. Note that the main proton beam does not strike any solids after collimator C, until it is stopped in lead at the integrator. The integrator is placed 6 feet behind the counters, in order to allow extra concrete shielding between them.

The method of taking a background run is to close the cylindrical shutter, shown in Fig. 2, to cut off all scattered protons from the counters. A standard quantity of beam is then run through the scattering

chamber, exactly as for a scattering run, and the number of background counts is recorded.

Since the background was large, it had to be evaluated accurately; and unfortunately the background varied with time by as much as 25 percent, so that one could not depend on taking a single background run to give a good correction to a single scattering run. It was necessary to break up the running time into a series of short scattering runs alternated with background runs, so that the fluctuations in background would average out over the series. The only assumption necessary here is that background fluctuations are random with regard to whether the run is for measuring scattering or background, and we feel that this condition has been fulfilled. Background variations are caused by the operating conditions of the accelerator, and hence one might suspect that the accelerator crew would be more careful in their operation on the average during a scattering run than during a background run. Accordingly, precautions were taken to insure that the crew would not find out during a series, which runs were for background. The general background level in the room was continuously monitored by the auxiliary counter mentioned earlier; the readings from this counter were used to approximately normalize each background run to the general background level during the preceding scattering run. By these devices, we were able to reduce the effect of background variation on our results to about 1/2 percent, as judged from the internal consistency of the series of five runs listed in Table I.

A further item of importance is to show that the true background is being measured, i.e., that closing the shutter to cut off the scattered protons from the counters does not appreciably change the background count. The two principal avenues by which this could occur are

here considered; 1. Hydrogen-scattered protons which normally are counted, or which normally strike opaque zones of the steel defining plate, will instead strike the shutter and make a nuclear reaction which can produce a count. This will be a small effect, since such a nuclear reaction will have a yield of about 10^{-5}, and the resulting particles will be counted with low efficiency by the counters. 2. Any neutrons which enter the chamber colinearly with the incident proton beam could produce n-p scattering in the H_2 gas, which would be recorded as p-p scattering since the shutter would cut out the scattered protons during background runs. In all counters except the 39° one, protons would not have sufficient energy to penetrate the absorbers placed in the counter windows unless they were scattered from neutrons of at least 22 Mev energy. The corresponding minimum neutron energy at the 39° counter is 18 Mev. We have shown in another experiment that the yield of high energy neutrons by 32 Mev proton bombardment on copper or lead is less than 10^{-6}, using the carbon n,2n reaction as the detector. This reaction has a neutron threshold of 20 Mev. The most likely place for these neutrons to be produced is at collimator C, and allowing that 100 times as much beam is stopped at this collimator as is transmitted, and that the neutrons generated spread out with a full angle at 1/2 intensity of 10°, the neutron intensity inside the defining cylinders is less than 10^{-6} of the incident proton beam. Since n-p and p-p scattering cross sections are comparable in magnitude, n-p scattered protons will be less than 10^{-6} of the p-p scattered ones. We have consequently neglected the above as a source of error.

ADJUSTMENT OF COUNTERS -- COUNTING EFFICIENCY

It is of course a critical factor of this experiment to know that no protons miss being counted which can geometrically enter the counter windows; or at least to have a minimum measure of the counting efficiency. The following procedure was followed to set the gain of each channel to the place where nearly all protons are counted, yet the small amplitude background counts will be discriminated against. This point is just above the "knee" in the plateau for counting protons. 1. The counter apparatus was allowed to come to equilibrium by operating for an hour. 2. A pulsed signal generator was connected to the discriminator input of all 12 channels and the discriminators were adjusted to all operate at the same predetermined pulse height. 3. Each amplifier was observed not to have excessive noise, the gain of all amplifiers was adjusted to be nearly the same. 4. The high potential was applied to the collecting wires, and a phosphorus^{32} source of beta rays was placed in turn at each of the 0.001 in. dural windows in the back side of the counter (see Fig. 2). The potentiometers for supplying the potential to each wire were then adjusted to give approximately the same counting rate in each counter. This insured that all counters would be somewhere near the same in sensitivity. All further adjustments were made by observing plateaus of p-p scattering as a function of the master counter supply voltage. Short scattering runs were made, successively reducing the master potential until the "knee" appeared on the plateau of each counter. The relative potentials were then again adjusted to make the knee appear at approximately the same potential on each counter. All data that were to be used were taken at counter

potentials 20 to 30 percent above the "knee."

The problem still remains, however, that the plateau may not be perfectly flat in the region of operation, but may still have a finite slope upward toward 100 percent efficiency, since for some reason a few protons may give small pulses. To determine the plateau accurately requires good statistics, and the obvious way to determine it is to do a complete p-p scattering experiment at several counter voltages. Due to difficulties of background, it proved impossible to get good statistics at more than one voltage in a single day's running. However in each series of runs, a few were made at counter potentials 100 volts below the usual one, and the analysis of these data tells us something about the plateau. To get better statistics, the low-voltage data from all the counters was lumped together, to see if there was an upward slope, on the average, in the counter plateau. Within the statistics of $\pm$ 1 1/2 percent the plateau proved to be flat, the actual slope measured being negative, i.e., the counts decreased 1.6 percent on the average, for a 100 volt increase in wire potential. It is improbable that the slope is really negative, and hence a probable error of + 1 percent, - 0 percent is assumed, due to plateau slope.

MEASUREMENT OF INCIDENT PROTON FLUX

The beam-integrating equipment is shown physically in Fig. 6 and electrically in Fig. 7. Protons enter the high vacuum region of the collector through a 5-mil aluminum foil and pass through a guard cylinder into the collector cup, where they are stopped in lead. The guard cylinder is maintained at -200 volts in order to trap secondary electrons which are produced by the beam at the aluminum entrance foil and in the cup. As an added precaution against secondaries, small permanent magnets

were mounted at the foil and in the cup to produce a field of about 50 gauss at the proton path.

The size of the beam and its orientation in the cup were determined photographically, as described under alignment.

The integrator circuit (Fig. 7) functions as follows: Protons collected in the cup charge the condenser C_1 (.001071 mmfd), causing a voltage V to appear across it. The charge if calculated as V times C_1. V is measured by manually adjusting the standard potentiometer P_1 to make the cup remain at ground potential, whereupon V is read as the voltage on the potentiometer dial. The electrometer tube and galvanometer comprise a vacuum tube voltmeter which is used as a null instrument to indicate when the cup is at ground potential. It will be seen that the potentiometer needs to be adjusted accurately only at the beginning and end of a run; it was kept in rough adjustment during a run, however, to monitor the collected charge.

To avoid errors due to stray lead capacitance and possible sensitivity to air pressure, it was decided to measure the integrating capacitor C_1 in its operating position in the vacuum chamber. The effective capacitance for beam integration is the mutual capacitance between the cup and the potentiometer lead marked A, and is independent of the capacitance of either to ground; this was measured by comparison with a standard variable air condenser both at 1000 cycles and at very low frequency (actually d. c. impulses about 5 seconds long) by suitable bridges. These measurements checked to within 0.2 percent, which was taken as the limit of short-time soakage in the condenser. Long-time soakage and leakage were also shown to be less than 0.1 percent for half-hour runs. The calibration of the variable air condenser was also checked

against a standard mica condenser at 1000 cycles. C_1 is a polystyrene insulated unit, made by the Fast Company. A series of p-p scattering runs was made as a function of gas pressure in the integrator, from which it was concluded that errors due to secondary electrons and gas multiplication would be negligible. The grid current of the electrometer tube was measured after each series of runs, for which a correction of approximately one percent was necessary. We have assigned a probable error of $\pm$ 1/2 percent to the beam measurements.

MEASUREMENT OF INCIDENT PROTON ENERGY

The diameters of the collimators which are pertinent to the energy measurement are as follows: A, 2mm; B, 2mm; C, 5mm (see Fig. 1). These three collimators, used in conjunction with the magnet, form an energy analyser which transmits a band of energies $\pm$0.5 Mev wide. The integral of the magnetic field along the trajectory of the protons has been measured to $\pm$ 1/2 percent by a group working with Mr. Duane Sewell. This plus the angular deflection of the beam is sufficient to define the energy of the beam. The energy was also measured using proportional counters coincident in depth, plus aluminum absorbers to obtain first an integral curve, and then a differential absorption curve. Each of these methods gives an energy of 31.8 $\pm$ 0.3 Mev for the incident beam, corrected for energy loss in the nylon foil and hydrogen gas.

A few H_2^+ ions get accelerated in the machine to an energy of 16 Mev (one-half of design velocity) and these have the same H-rho in a magnetic field as do the 32 Mev protons. To get rid of these ions, a "stripping foil" of 0.0002 in. nylon is inserted in the beam at the plane of collimator A; this breaks up the H_2^+ ion into two protons of

8 Mev each, and the magnet bends them to twice the radius of a 32 Mev proton.

HYDROGEN GAS SUPPLY

Pure hydrogen gas for the scattering chamber was obtained by passing commercial tank hydrogen through a heated palladium thimble. 500 pounds per square inch pressure of impure hydrogen was maintained on the outside of the thimble, the pure hydrogen being taken from the inside at one atmosphere pressure. The thimble was a cylinder of palladium, closed at one end, 6 in. long, 1/4 in. in diameter, and 0.006 in. wall thickness; it was supported against collapse by a column of ceramic beads on the inside. The tube was directly heated by passing alternating current, about 70 amperes, through its length. The normal output was 10 cc per second of gas at one atmosphere.

Before entering the chamber, the gas passes through a coil of copper tubing wrapped around the collimator tube, to insure thermal equilibrium with the walls of the chamber. The temperature is measured by a thermometer embedded in the flange of the collimating tube during a run. All joints in the tube carrying gas from the palladium tube to the chamber are made without rubber gaskets, using either metal flared fittings or threaded joints waxed with CENCO "Sealstix." Hydrogen enters the chamber in the middle of the collimator and from there flows continually out into the main volume of the chamber. It will be seen that most of the scattering takes place in the interior of the collimating tube where the hydrogen is most pure; this is particularly true of scattering at small angles, where the effects of Coulomb scattering from contaminating gases are most likely to be encountered. The excess hydrogen escapes

from the chamber via an oil-lock tube which regulates the pressure to a few centimeters of oil above atmospheric pressure, and prevents back-diffusion of air into the system. The hydrogen flow normally used was sufficient to change the gas completely in 90 minutes; this swept out contaminating gases evolved from the chamber walls with sufficient speed. Tests for determining gas contamination will be described in a later section.

ANALYSIS OF GEOMETRY

The basic differential equation defining scattering yields (ratio of scattered to incident protons) is

$$dY = \left(\frac{d\sigma}{d\Omega}\right)_{c.m.} N\, dt\, d\Omega \qquad (1)$$

where dY is the yield of protons scattered into the solid angle $d\Omega$ from a path length dt of incident beam. N is the number of scattering nuclei per unit volume, and the center of mass system of coordinates is used.

Reference to Fig. 2 shows that scattering occurs over such an extended region in this apparatus that the solid angle subtended by a given counter will vary considerably over the scattering region, and hence many of the usual simplifying assumptions made in other scattering experiments are not justified here. The quantity dY defined above must be integrated over the solid angle of the counter, $d\Omega$, and along the scattering length dt. The geometry was evaluated in terms of a factor G, defined as

$$G^{-1} = \int_{t,\Omega} d\Omega dt \qquad (2)$$

Then,

$$(d\sigma/d\Omega)_{c.m.} = G\,Y\,/\,N \qquad (3)$$

The assumption is made that $(d\sigma/d\Omega)_{c.m.}$ is a linear function of the scattering angle θ within the range of θ accepted by a given counter, for lack of previous knowledge of the real shape of the curve. The errors introduced by this assumption are calculated to be less than 1/2 percent, if one accepts the theoretical curve for $\delta_s = 49^\circ\ 21.6'$ in Fig. 11 as the true one. Table II indicates the angular interval covered by each of the counters, ranging from 10.6° for the 27.3° counter (all angles are now given in the center of mass system) to 19.4° for the 89.7° counter. The entire angular interval does not have the same weight of course, since relatively fewer protons of extreme angles can get in. The weighting functions for protons of various angles getting into a given counter are roughly symmetrical trapezoids as shown in Fig. 9. For purposes of plotting the data, the effective angle of each counter is taken as half-way between the two extreme angles which the counter "sees."

The G factors were evaluated by two independent methods: first by graphical integration from an accurate full-scale drawing, and then by an analytic method. The two methods agreed at all angles to better than 1/2 percent. A number of small corrections to the above are necessary, due to simplifying assumptions made in the calculations. The value of these will be given for a typical counter, the 64.7° one:

1. -1.5 percent, due to scattered protons penetrating the corners of the defining cylinders (copper). It is assumed that the protons are not scattered in the copper, since roughly as many will scatter into a

given counter as get scattered out. All protons are assumed to reach the counters if the thickness of copper they must penetrate leaves them enough energy to penetrate the aluminum absorber at the counter window. This energy threshold of the counters greatly reduces the effect of penetration of the copper.

2. + 0.16 percent, due to "tunnel effect" of the parallel sides of the apertures of the counter windows.

3. A correction for the finite width of the incident beam was necessary for the small angle counters, amounting to -0.35 percent at 27.3°. The original calculations assumed the beam to be a line source.

4. It was discovered that certain dimensions of the chamber were warped when it was assembled, since it was necessary to draw the peripheral ring of bolts tight to make the major vacuum seals. Hence it was necessary to measure all the essential dimensions while it was assembled. This was done by means of various gauges inserted through the access port. The radius of the counter windows from the center of the chamber was measured at six points for each counter, and the width of each counter aperture was measured at 18 points. The angular position of each counter aperture relative to the center of the chamber was measured by calipers and calculated by trigonometry. The aperture between the defining cylinders was measured, as well as their diameters and their position relative to the center of the chamber. Corrections were derived from these data for each counter, amounting to + 2.4 percent for the 64.7° counter. It is believed that the result of these measurements is good to ± 0.2 percent.

The corrected G factors are listed in Table I.

EVALUATION OF FALSE SCATTERING EFFECTS

To properly evaluate the results of this experiment, it is necessary to know whether the scattered protons observed in the counters are all the result of p-p collisions, or whether an appreciable fraction of them may be scattered from the collimators, the entrance foil, or from contaminating gases.

Reference to Fig. 2 will show that it is impossible for a primary proton to scatter from the nylon foil or any of the metal apertures and get into a counter, without scattering once more in the process from another body. The probability of such an event is rather complicated to calculate, so we relied on experiments in which we looked for residual scattering counts when the chamber was highly evacuated. No effect was observable above background, hence this source of error would be less than 1 percent at all angles.

A possible event not covered by the above experiment would be that protons, scattered from hydrogen gas near the entrance foil at small angles, would strike the defining cylinders and thence bounce into a counter. To test this, it was necessary to have hydrogen atoms in the collimating tube to illuminate the edges of the defining cylinders with scattered protons, but it was also necessary to have no hydrogen in the scattering region from which "honest" scattered protons could reach the counters. This was arranged by placing an extra nylon foil 5 mils thick in the collimating tube at the plane of collimator E (Fig. 2). This foil is calculated to produce Rutherford scattering equivalent to filling the collimating tube with 100 atmospheres of H_2 gas. Residual scattering was now looked for with the chamber evacuated, but none was observed. One atmosphere of H_2 gas normally present in the collimator will produce less than a 0.1 percent error in the 27.3° counter, due to this event.

To determine the tolerance on gas impurities for this experiment, the scattering of 32 Mev protons in air was measured, using the same apparatus. From this we concluded that the hydrogen should contain less than 0.01 percent of nitrogen or oxygen in order to reduce the resultant scattering to 0.1 percent of the p-p scattering. To determine the rate of evolution of contaminating gases from the chamber walls, the chamber was evacuated before each run, and the rate of increase of pressure measured on the closed-off chamber with the (cold) palladium tube connected. This rate never exceeded 10^{-5} atmospheres per hour, which, combined with the hydrogen flushing period of 1 1/2 hours, gives a maximum impurity content of 0.001 percent for the gas in the main chamber. Thus the feature of introducing the pure hydrogen gas into the scattering region of the chamber is not absolutely necessary, but it is a valuable safeguard, and it provides a gross experimental check on the contamination of the main chamber, as follows:

At the end of a series of runs, a run was made in which the supply of pure hydrogen was cut off, so that any contamination present in the main chamber would diffuse into the scattering region. The measured cross sections were the same, to within the probable error of the measurement, (2 percent) as in the runs in which the gas was flowing. The palladium tube was tested for perforation before and after each series of runs. In view of the measured low rate of evolution of contaminating gases, and the continuous renewal of hydrogen in the scattering region, we consider the scattering due to gas contamination to be negligible.

It is possible for hydrogen-scattered protons to strike the radial and conical supporting struts in the chamber and thence scatter into the counters. The corrections for these scattered protons have been estimated

on the basis of Williams' formula,[22] and were less than 0.1 percent at all angles.

PROCEDURE

Before a series of runs was made, the electronic circuits were allowed to warm up for an hour or more, the palladium thimble was tested for perforation, and the rate of pressure rise measured for the evacuated scattering chamber, sealed off from the pump. The chamber was then started to fill with pure hydrogen, a process requiring 1 1/2 hours to complete. Meantime, the beam integrator was checked for drift rate, and the counter gains were adjusted using the P^{32} source, as described earlier. The analysing magnet current was adjusted to correspond to the desired proton energy, care being taken to always approach this current from the low side, to avoid hysteresis effects.

Next, proton-scattering runs were made to determine counter plateaus as described earlier, and then the main series of runs was made. The procedure for making any scattering run was as follows: an electrically operated "flip gate," located at the exit end of the analysing magnet, was used to cut off the proton beam from the scattering chamber. The counters were turned off (by means of removing their gating pulse) and the cup on the beam integrator was grounded, to start it out at zero volts, and the galvanometer was zeroed. The mechanical registers operated by each of the counters were read and the readings recorded for an initial reading, and the proton shutter in the chamber (Fig. 2) was opened.

To start a run, the flip gate was first opened for a minute so that the accelerator crew could optimise the beam; the flip gate was then closed, the beam cup was ungrounded, and then the flip gate was opened

and the counters were turned on simultaneously. A run lasted from ten to twenty minutes, during which time the potentiometer P_1 (Fig. 7) was kept in rough adjustment, as indicated by the galvanometer being off scale. As the end of a run approached, the potentiometer was set for the exact charge desired, and the run was terminated when the galvanometer read zero. The run was terminated by closing simultaneously the proton flip gate and the counter switch; the beam cup was grounded, and the flip gate was opened again for benefit of the crew, while the final readings of the registers were recorded. These served also as the initial readings for the background run. A background run was now made in fashion identical to the above, except that the shutter in the scattering chamber was closed.

A series of runs consisted of about ten scattering runs alternated with ten background runs as above. Each background run was arbitrarily associated with its preceding scattering run, and was roughly corrected to the prevailing background during the scattering run by multiplying the background counts at each angle by the ratio of background monitor counts during the scattering run and during the background run. The corrected background was then subtracted from the scattering counts, and this "net scattering" count was corrected for counter resolving time, and reduced to standard temperature and pressure of hydrogen, and further normalized to a collected charge of 317×10^{-12} coulombs of incident protons. The result is listed in the columns of Table I. The actual collected charge for each run is listed in column 13 of this table, and is used as a statistical weighting factor in reducing the data.

After a series of regular proton scattering runs, a "gas contamination" run was made as described earlier, to check purity of the hydrogen,

and sometimes a vacuum scattering run was made to check scattering from collimators and the foil.

The temperature of the scattering chamber was recorded every half-hour, and the barometer was read at the beginning and end of a series. In addition, readings were recorded for the oil manometer, which read the excess pressure of the hydrogen over atmospheric.

RESULTS

Listed in Table I along with the net proton counts are: Column 2, the date; column 3, the master counter supply voltage; columns 4-11, proton scattering counts; column 12, the average percent of background for all the counters; and column 13, the charge of incident protons, Q.

The counter potentials have only relative significance for the runs on a single day, since the pressure of counting gas was changed somewhat for each day of running. The runs marked (*) are actually used as p-p scattering data, the others being included to give data for plateau slope.

All runs made on a given day are considered members of a single series; the mean number of counts at each angle for each series is calculated, each run being weighted according to the incident proton charge, and tabulated at the bottom of each series.

To determine the statistical accuracy of the results, one would not be justified in assuming the usual reciprocal of the square root of the number of counts relationship, since background variations introduce some spread. Instead, the internal consistency of the five series of runs is used as the criterion. The R. M. S. deviation of the five series, divided by the square root of 5 is used as the statistical probable error

of the mean values of counts for each angle. The mean values, weighted again according to the total charge in each series, are listed in row 27, and the statistical probable errors in row 28.

Row 29 gives the G factors for converting proton counts to cross sections according to equation (3), and row 30 gives the resultant cross sections.

Probable errors of the results are treated in two stages: First, the relative probable errors for determining the shape of the differential cross section curve are given, and then the absolute probable error is given for one point on the curve, at 89.7° in the center of mass system. The assigned probable errors are as follows, for the absolute cross section value at 89.7°:

a. Incident proton charge . . . . . ± 1/2 percent

b. Mean energy of protons . . . . . ± 1 percent

c. Measurement of temperature and pressure . . ± 1/3 percent

d. Slope of plateau . . . . . + 1 percent
- 0 percent

e. Statistical probable error of counts . . . ± 1/2 percent

f. Calculation of geometry . . . . . ± 3/4 percent

The root sum square value of these amounts to + 1.8 percent, -1.5 percent, which is used as the probable error of the absolute cross section at 89.7°.

The relative probable errors for the rest of the cross section values are taken as the root sum square values corresponding to d, e, and f above, for each angle. These are listed in row 31. It will be seen that items a, b, and c affect the scattering cross sections at all angles proportionately, and hence do not affect the shape of the curve.

A valuable check on the internal consistency of the data is obtained from the fact that the 89.7° and 77.6° counters are split azimuthally into "Top" and "Bottom" halves, and the counts in each half registered separately. The 89.7°T and 89.7°B counters are observed to agree well within their probable errors. The 77.6°T and 77.6°B counters consistently differed by 4.6 percent, however, which is more than twice the assigned relative probable error. The top counter gives the larger number of counts. All the counters were disassembled and inspected to try to determine the cause of this difference, but no significant differences could be found. It was finally discovered that the amplifier used with the 77.6°T counter was a special one having a short time constant, which was overloading on the largest size pulses, and giving out double pulses to the scaling unit. The data from this counter is discarded, and only that from the 77.6°B counter is used.

Fig. 11 is a plot of the scattering cross section as a function of angle in the center of mass system, along with the probable errors. Fig. 12 gives the same data, along with data taken by Panofsky and Fillmore at 29.4 Mev, and the 90° coincidence results of Cork, Johnston and Richman[23] using the apparatus described in this work.

Christian and Noyes have made a theoretical analysis of these results, and arrive at these conclusions, amongst others:

1. Cross sections at 32 Mev are compatible with pure S-wave scattering, of the magnitude to be expected from a Yukawa potential which fits the low energy data. Such a curve is drawn through the experimental points in Fig. 11.

2. According to usual potential theory, such a potential should cause a scattering of the D-wave also at this energy, giving rise to the

second theoretical curve in Fig. 11, for $\delta_s = 51^\circ\ 9.2'$, plus $\delta_d = 1^\circ\ 20.4'$. It is seen that the data is definitely incompatible with this curve.

3. Scattering in odd angular momentum states is very small; the cross section curve would be very sensitive to the presence of P-wave scattering.

4. Christian and Hoyes are able to fit the data empirically by including a tensor force with a very singular radial dependence.

One may hope that more information will be forthcoming from p-p scattering experiments at still higher energies.

REFERENCES

1. H. W. Wells, Phys. Rev. 47, 591 (1935)

2. M. G. White, Phys. Rev. 49, 309 (1936)

3. M. A. Tuve, N. P. Heydenburg and L. R. Hafstad, Phys. Rev. 50, 806 (1936)

4. L. R. Hafstad, N. P. Heydenburg and M. A. Tuve, Phys. Rev. 53, 239 (1938)

5. N. P. Heydenburg, L. R. Hafstad and M. A. Tuve, Phys. Rev. 56, 1078 (1939)

6. R. G. Herb, D. W. Kerst, D. W. Parkinson and G. J. Plain, Phys. Rev. 55, 998 (1939)

7. R. R. Wilson, Phys. Rev. 71, 384 (1947)

8. R. R. Wilson and E. C. Creutz, Phys. Rev. 71, 339 (1947)

9. R. R. Wilson, E. J. Lofgren, J. R. Richardson, B. T. Wright and R. S. Shankland, Phys. Rev. 71, 560 (1947)

10. I. H. Dearnly, C. L. Oxley and J. E. Perry, Phys. Rev. 73, 1290 (1948)

11. J. M. Blair, G. Freier, E. E. Lampi, W. Sleator and J. H. Williams, Phys. Rev. 74, 553 (1948)

12. G. L. Ragan, W. R. Kanne, and R. F. Taschek, Phys. Rev. 60, 628 (1941)

13. R. D. Bondelid, P. G. Bohlman and K. B. Mather, Phys. Rev. 76, 865 (1949)

14. F. L. Yost, J. A. Wheeler and G. Breit, Phys. Rev. 49, 174 (1936)

15. G. Breit, E. U. Condon and R. D. Present, Phys. Rev. 50, 825 (1936)

16. G. Breit, H. M. Thaxton and L. Eisenbud, Phys. Rev. 55, 1018 (1939)

17. L. E. Hoisington, S. S. Share and G. Breit, Phys. Rev. 56, 884 (1939)

18. H. A. Thaxton and L. Hoisington, Phys. Rev. 56, 1194 (1939)

19. H. A. Bethe, Phys. Rev. 76, 38 (1949)

20. H. Bradner, R. Crawford, H. Gordon and J. R. Woodyard, Phys. Rev. 73, 534A (1948)

21. W. Panofsky and F. Fillmore, UCRL-481

22. E. J. Williams, Proc. Roy. Soc. 169, 531 (1939)

23. B. Cork, L. Johnston and C. Richman, UCRL-482

24. R. Christian and P. Noyes, UCRL-554

TABLE I

Row	Date	Counter Potential, Volts	45°T	45°B	39°T	39°B	33°	27°	21°	15°	Av. Back-grnd. %	Q x10^{-12} cou-lombs
	Nom. Angles, Lab. system		45°T	45°B	39°T	39°B	33°	27°	21°	15°		
	Mean Angles, c.m. system		89.7°T	89.7°B	77.6°T	77.6°B	64.7°	52.5°	39.8°	27.3°		
			Counts x1/4 at each angle, normalized to N T P and to incident proton charge = 317.1 x 10^{-12} coulombs. T and B refer to Top and Bottom halves of a given counter.									
1	7-15-49	3200*	590	623	656	582	1072	-	728	492	21	316
2		3200*	623	585	596	594	1061	929	706	494	28	316
3		3100*	625	625	639	600	1077	-	720	480	11	316
4		3100*	590	612	616	617	1085	-	690	494	13	316
5		3000	585	597	606	561	1125	-	641	459	10	316
6		3000	623	599	656	596	1088	-	668	447	5	316
7		3000	618	612	638	610	1084	-	677	474	5	316
8		2800	612	604	607	516	1016	-	616	416	2	316
9	1st series av. values		607	611	627	598	1074	(929)	711	490		1264
10	7-22-49	3100*	655	630	642	602	1068	977	705	497	54	318
11		3000*	613	623	620	585	1039	948	713	485	25	318
12		3000*	614	647	624	601	1110	971	715	506	34	318
13	2nd series av. values		628	633	629	596	1072	965	711	496		954
14	8-29-49	2700*	574	594	613	584	-	925	707	470	24	317
15		2700*	627	631	627	586	-	940	729	502	19	317
16		2700*	599	622	627	599	-	938	743	515	33	317
17	3rd series av. values		600	616	622	590	-	934	726	496		951
18	9-1-49	2900*	607	607	600	598	1055	-	674	486	25	211
19		2800*	611	623	655	610	1091	-	742	514	25	211
20		2800*	657	625	629	608	1145	-	706	506	20	211
21		2800*	596	595	583	603	1059	-	710	485	26	211
22		2800*	582	606	643	589	1106	-	727	470	21	211
23	4th series av. values		611	611	622	602	1091	-	712	492		1055
24	9-8-49	2800*	603	626	643	603	1151	963	745	512	35	211
25		2800*	595	605	611	606	1114	947	690	512	35	211
26	5th series av. values		599	615	627	605	1132	955	717	512		422
27	wtd mean of 5 series		610.1	616.9	625.2	597.5	1085	943	715	494.9		
28	% stat. prob. error		+.77	+.59	+.22	+.38	+1.1	+.78	+.36	+.70		
29		G factor	.3108	.3108	.3128	.3128	.3444	.3955	.4937	.7054		
30	$(d\sigma/d\Omega)_{c.m.}$ in $10^{-27}cm^2$		14.30			14.05	14.05	14.02	13.27	13.13		
31	% prob. error (rel)		±1.1%			±1.1%	±1.4%	±1.2%	±1.1%	±1.2%		

TABLE II

(LABORATORY SYSTEM) θ_{max}	θ_{min}	Total Aluminum Absorber, mg/cm^2	Residual Range of 31 Mev Incident Proton mg/cm^2 Al
16.31°	11.00°	867	183
23.05°	16.76°	709	116
29.71°	22.51°	530	230
36.36°	28.49°	351	229
43.24°	34.39°	179	221
49.67°	40.00°	179	81
56.38°	46.00°	179	--

FIGURE CAPTIONS

Fig. 1 Plan View of Experimental Layout

Fig. 2 Proton-Proton Scattering Chamber

Fig. 3 Scattering Chamber

Fig. 4 Counter Chamber

Fig. 5 Collimator Disc

Fig. 6 Beam Integrator, Mechanical

Fig. 7 Beam Integrator, Electrical

Fig. 8 Beam Integrator, Photograph

Fig. 9 Counter Weighting Functions

Fig. 10 Scattering Equipment

Fig. 11 Proton-Proton Scattering at 31.8 $\pm$ 0.3 Mev

Fig. 12 Proton-Proton Scattering near 32 Mev

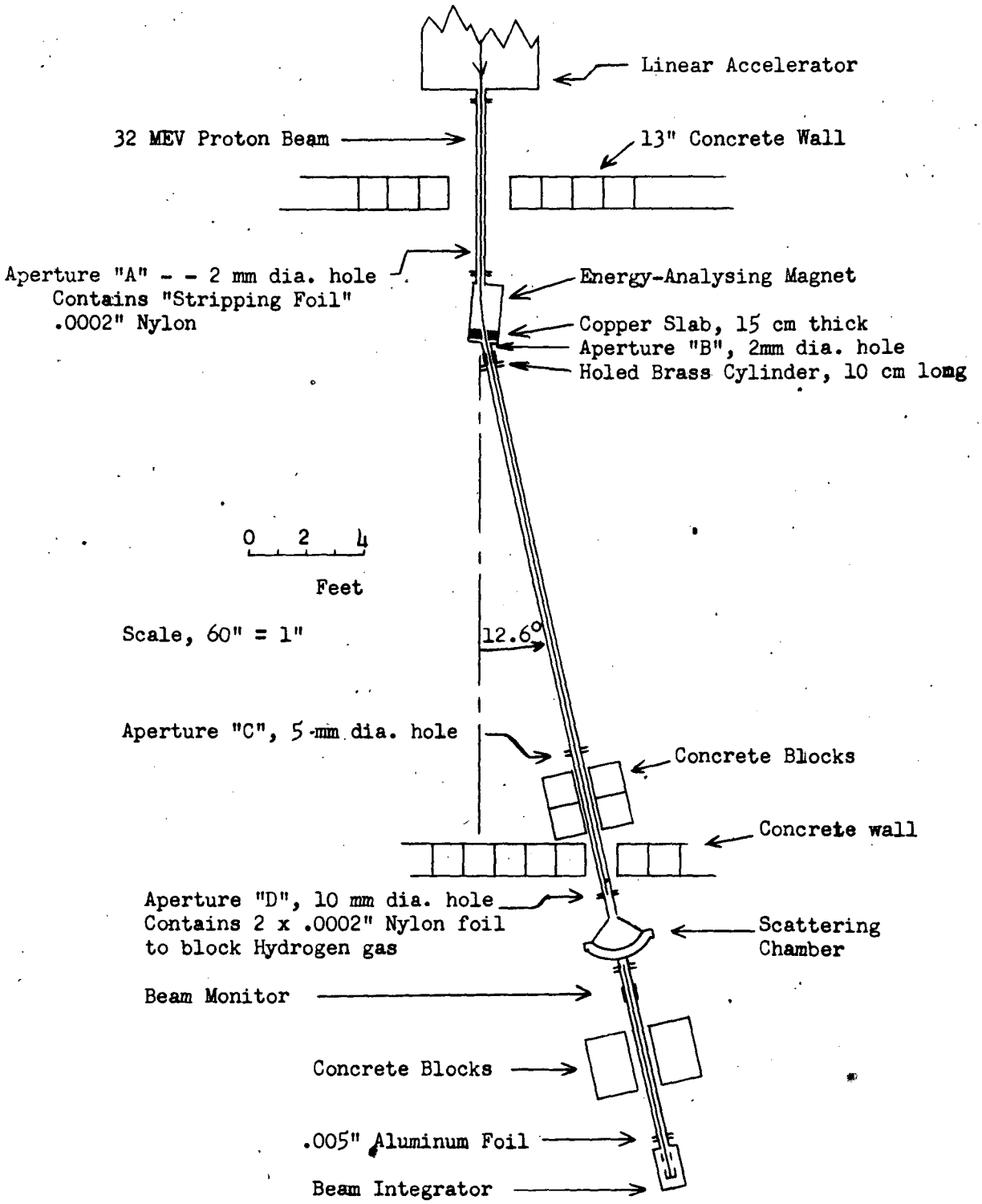

PLAN VIEW OF EXPERIMENTAL LAYOUT

FIG. 1

OZ 856

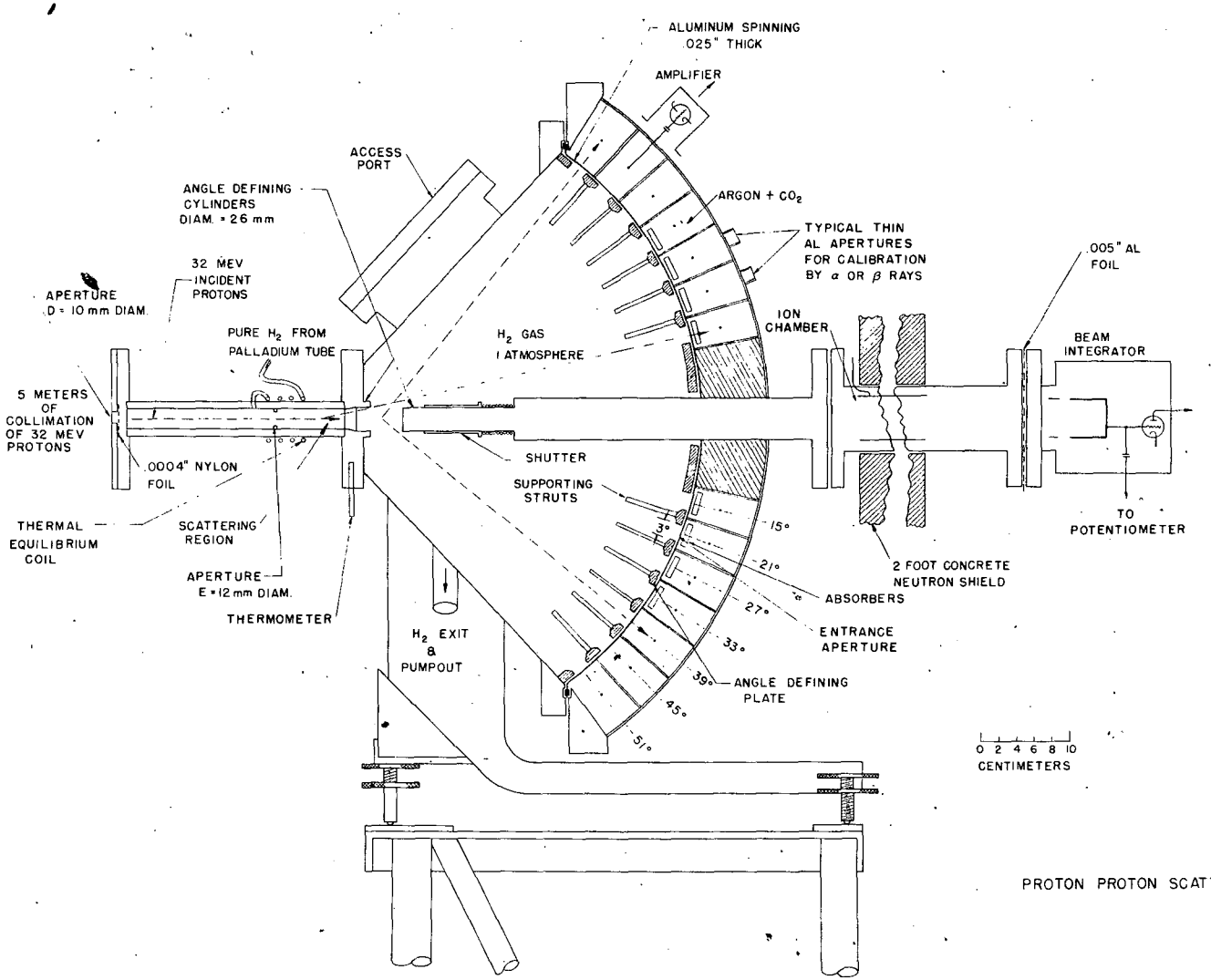

PROTON PROTON SCATTERING CHAMBER

FIG. 2

OZ 809

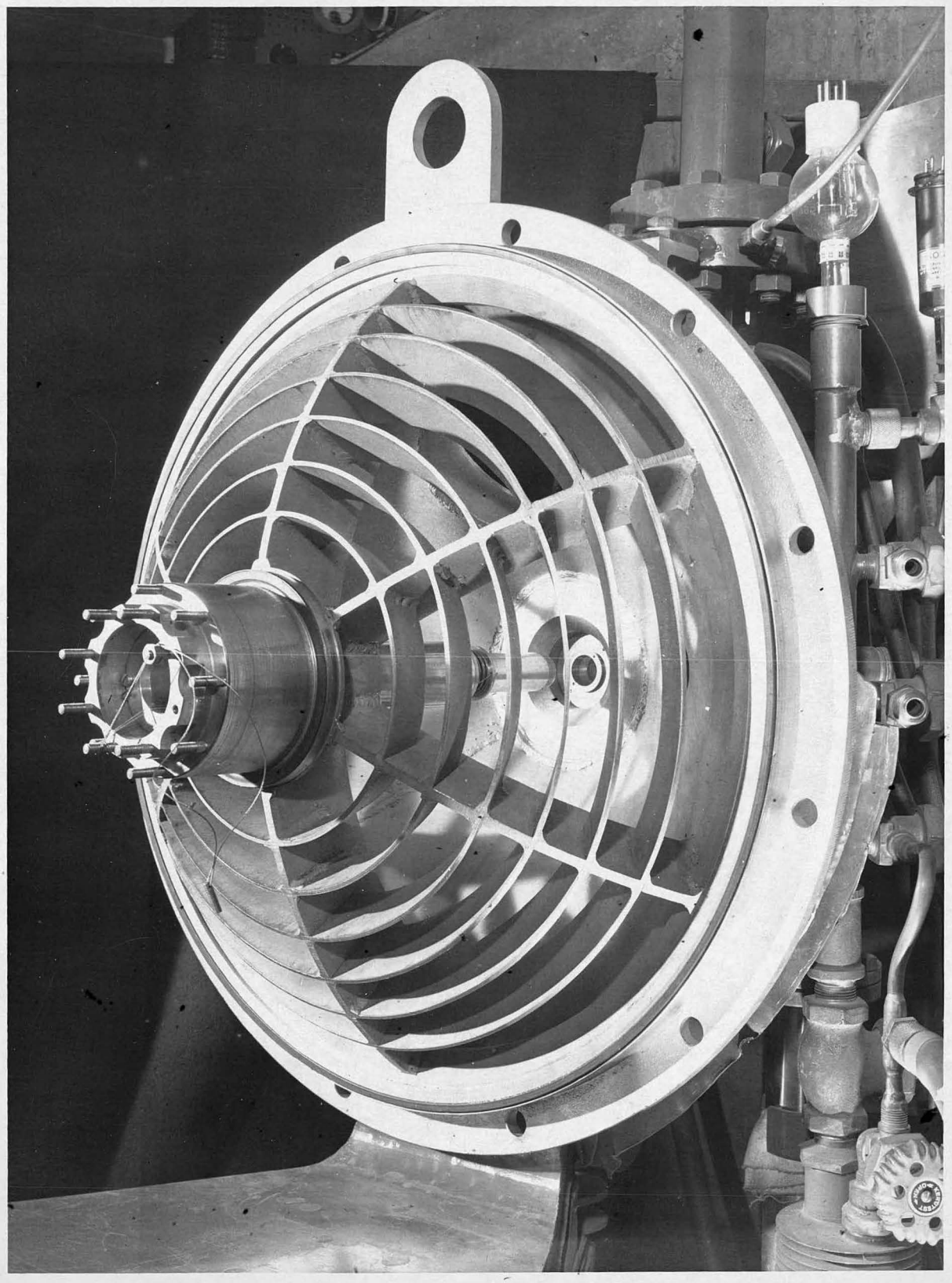

FIG. 3.

OZ 849

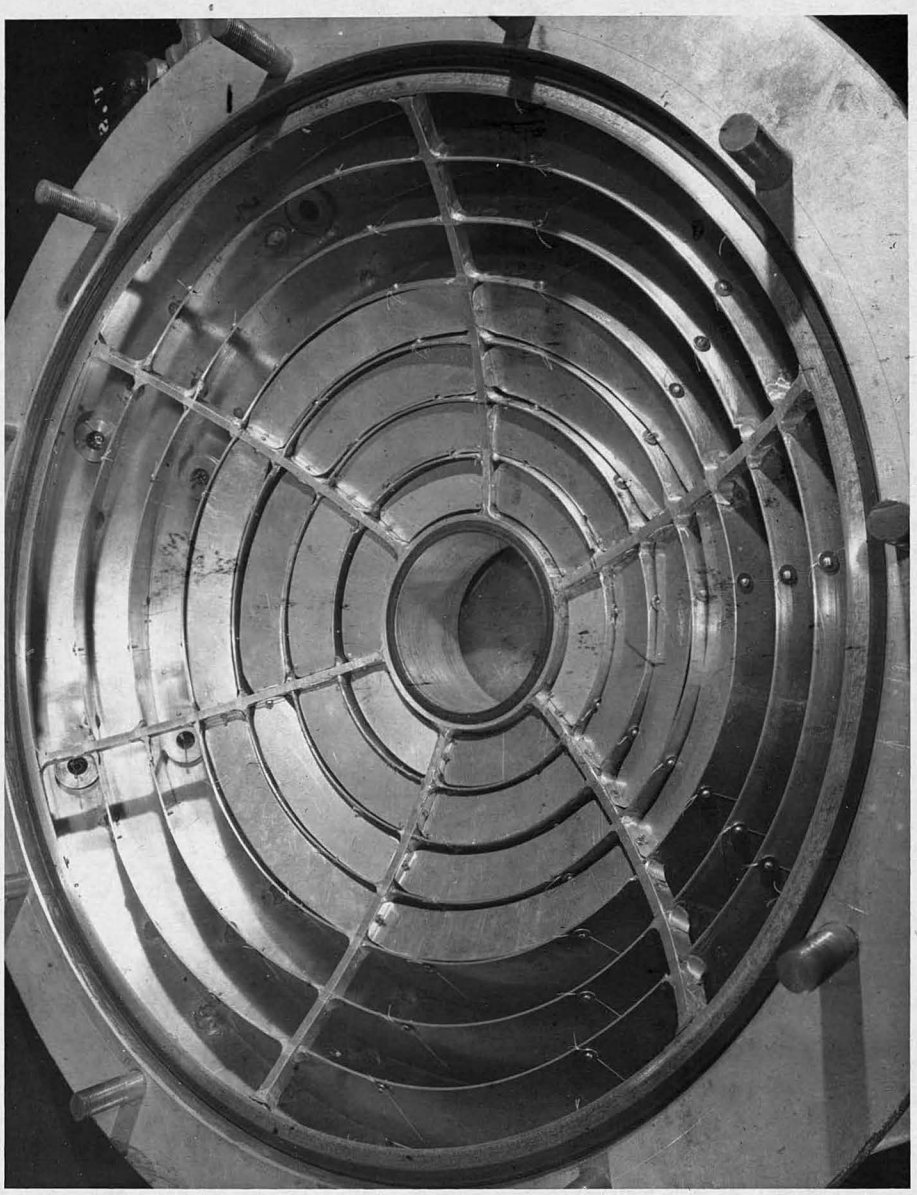

FIG. 4

OZ 797

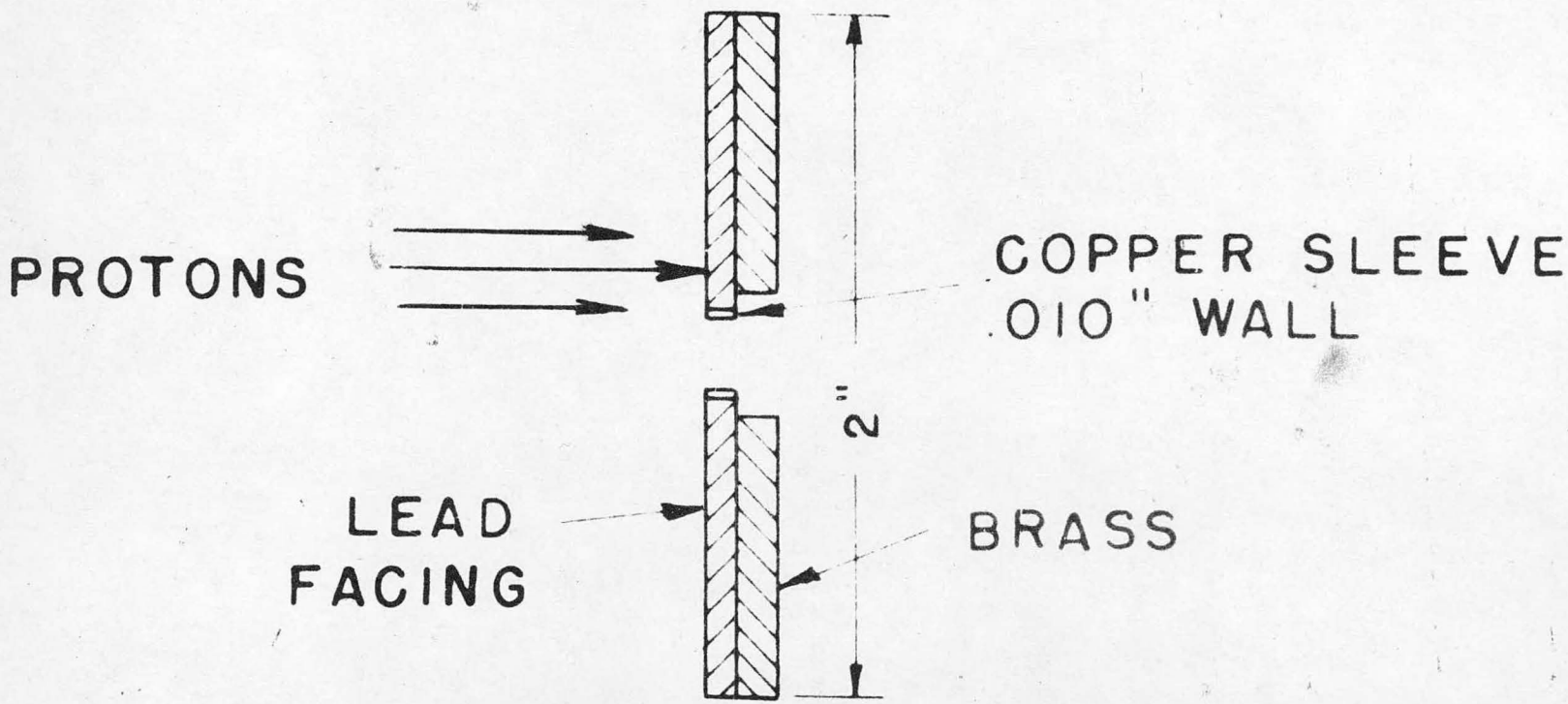

FIG. 5

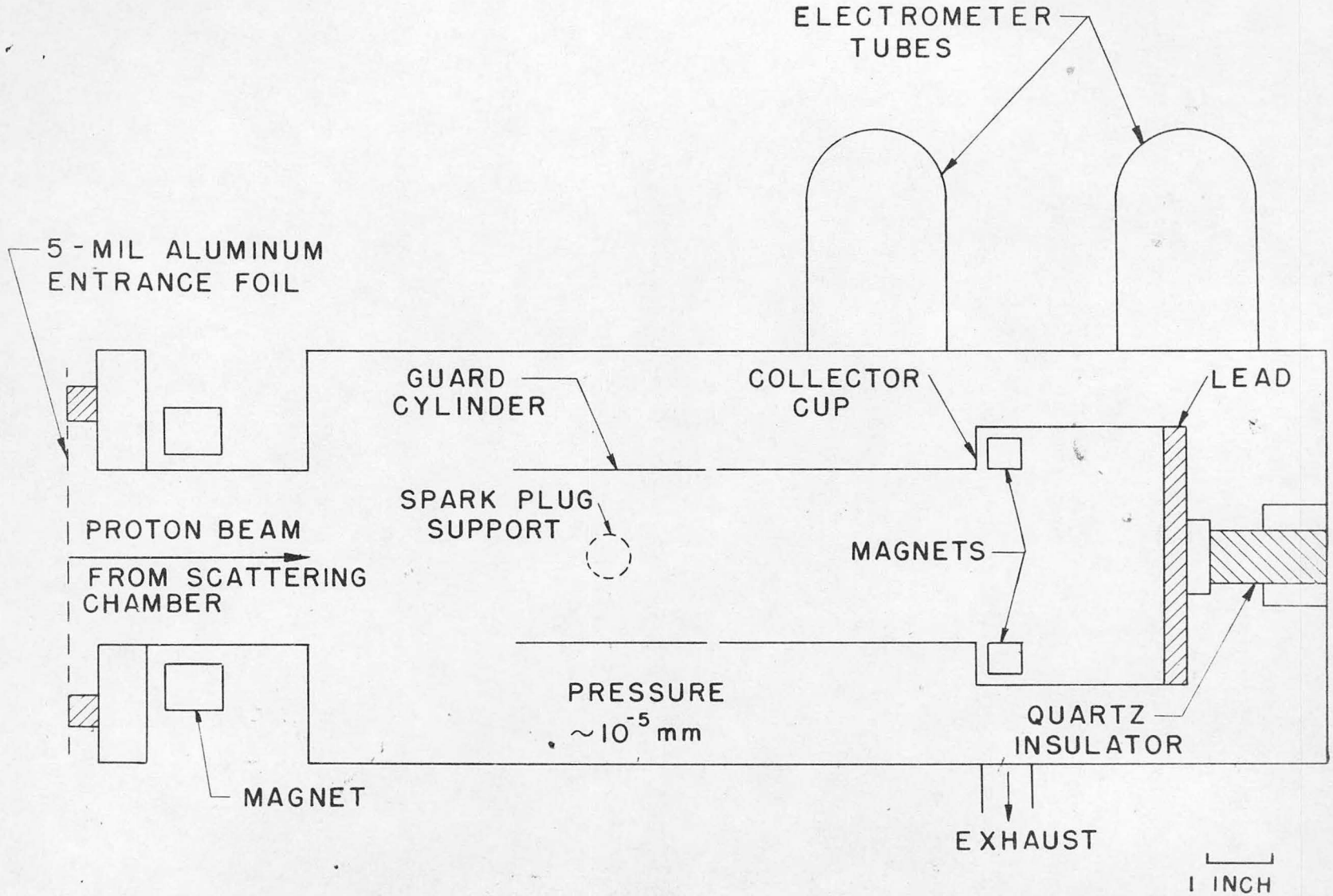
ELECTROMETER TUBES
5-MIL ALUMINUM ENTRANCE FOIL
GUARD CYLINDER
COLLECTOR CUP
LEAD
SPARK PLUG SUPPORT
PROTON BEAM
FROM SCATTERING CHAMBER
MAGNETS
PRESSURE
~10^-5 mm
QUARTZ INSULATOR
MAGNET
EXHAUST
1 INCH

FIG. 6

OZ 845

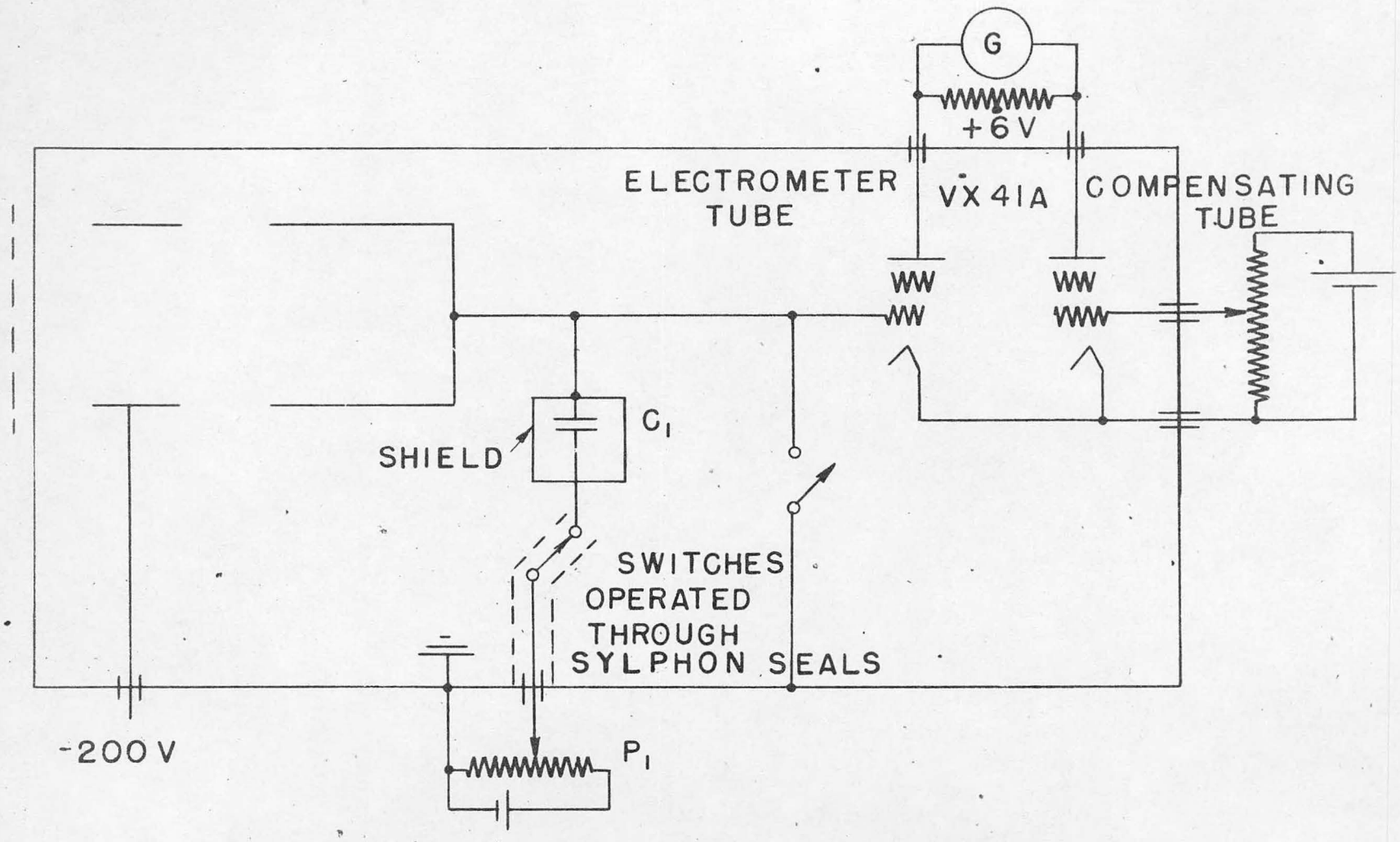
G
+6V
ELECTROMETER TUBE
VX 41A
COMPENSATING TUBE
SHIELD
C1
SWITCHES OPERATED THROUGH SYLPHON SEALS
-200 V
P1

FIG. 7

OZ 846

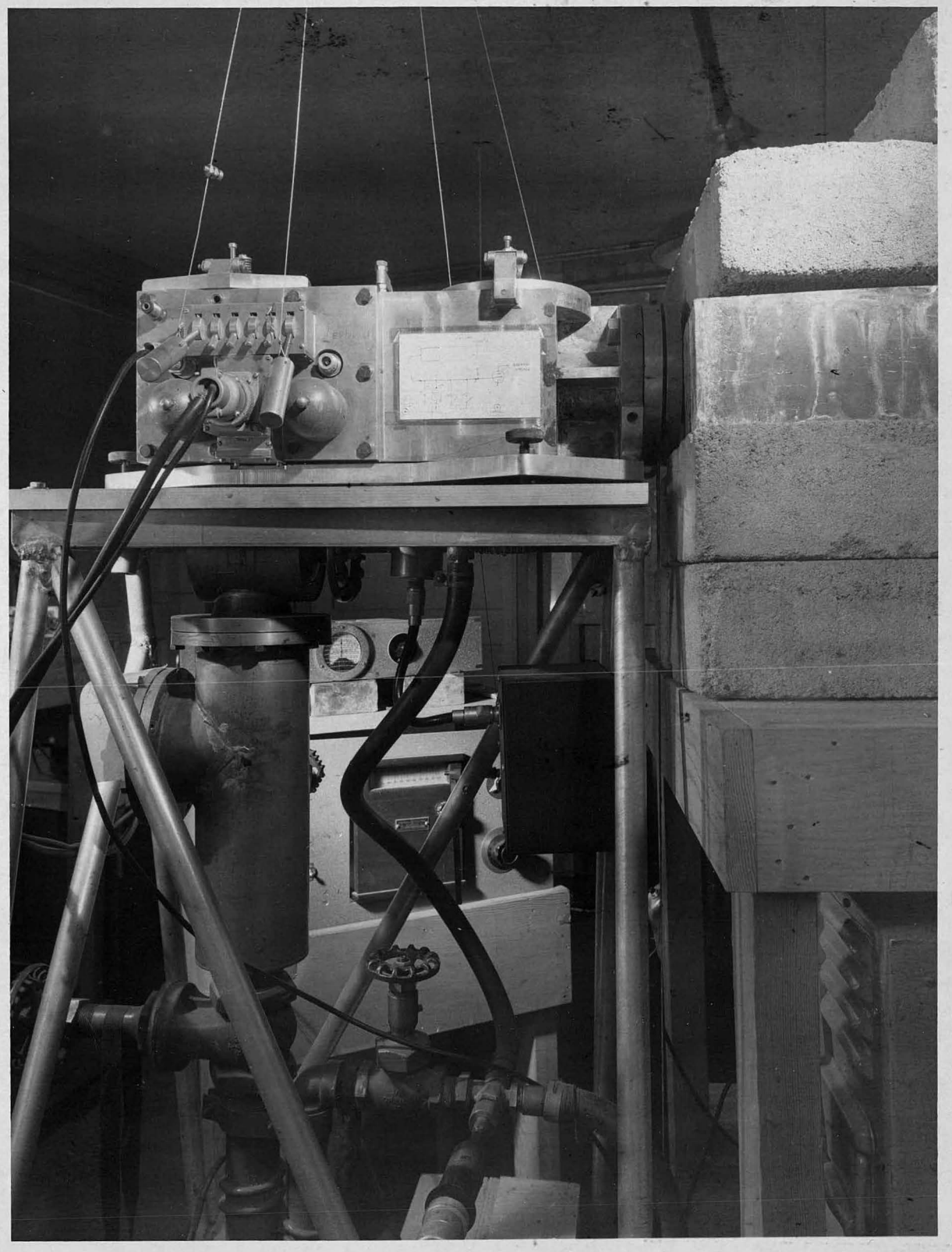

FIG. 8

OZ 848

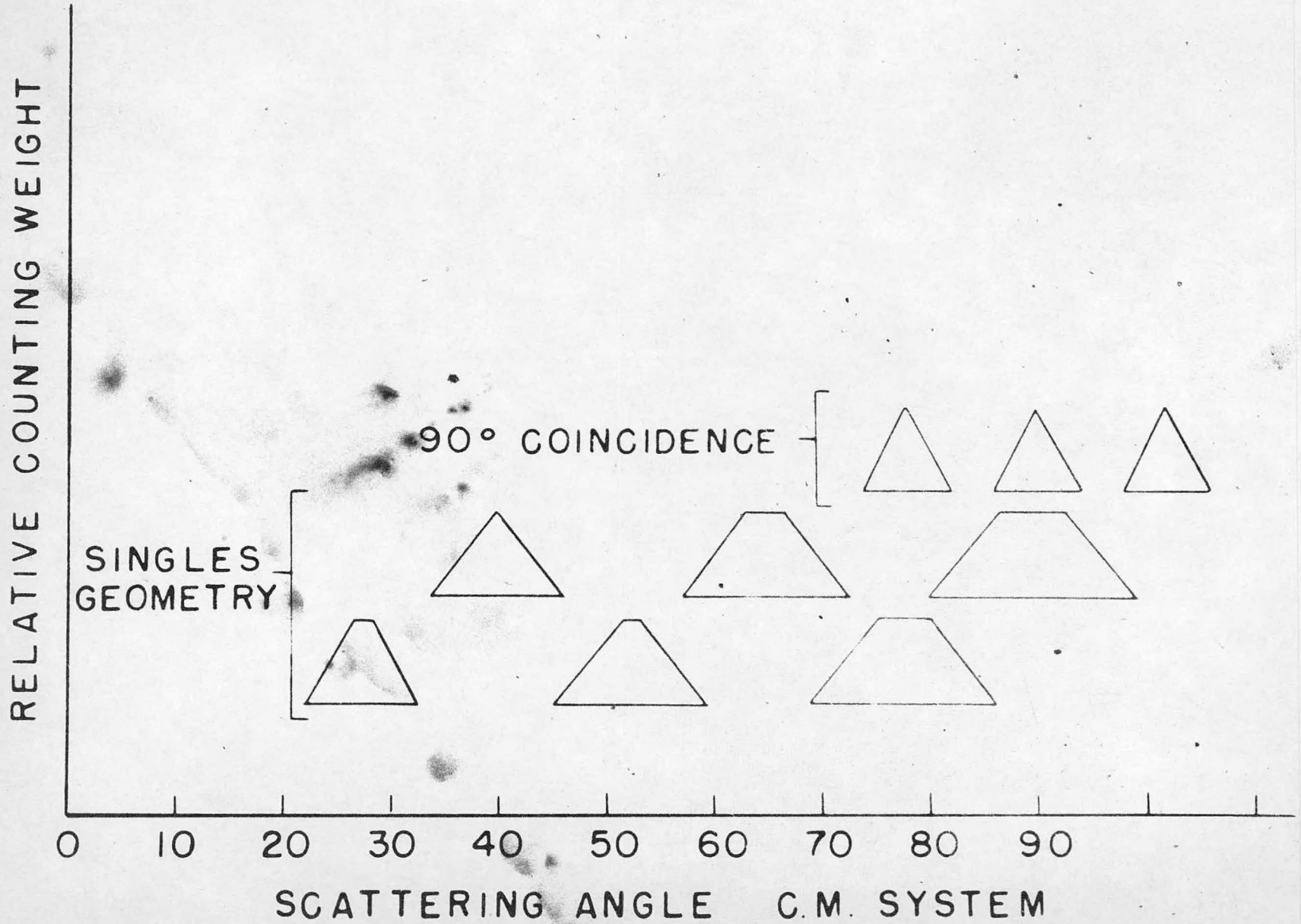
RELATIVE COUNTING WEIGHT
90° COINCIDENCE
SINGLES GEOMETRY
0
10
20
30
40
50
60
70
80
90
SCATTERING ANGLE C.M. SYSTEM

FIG. 9

OZ854

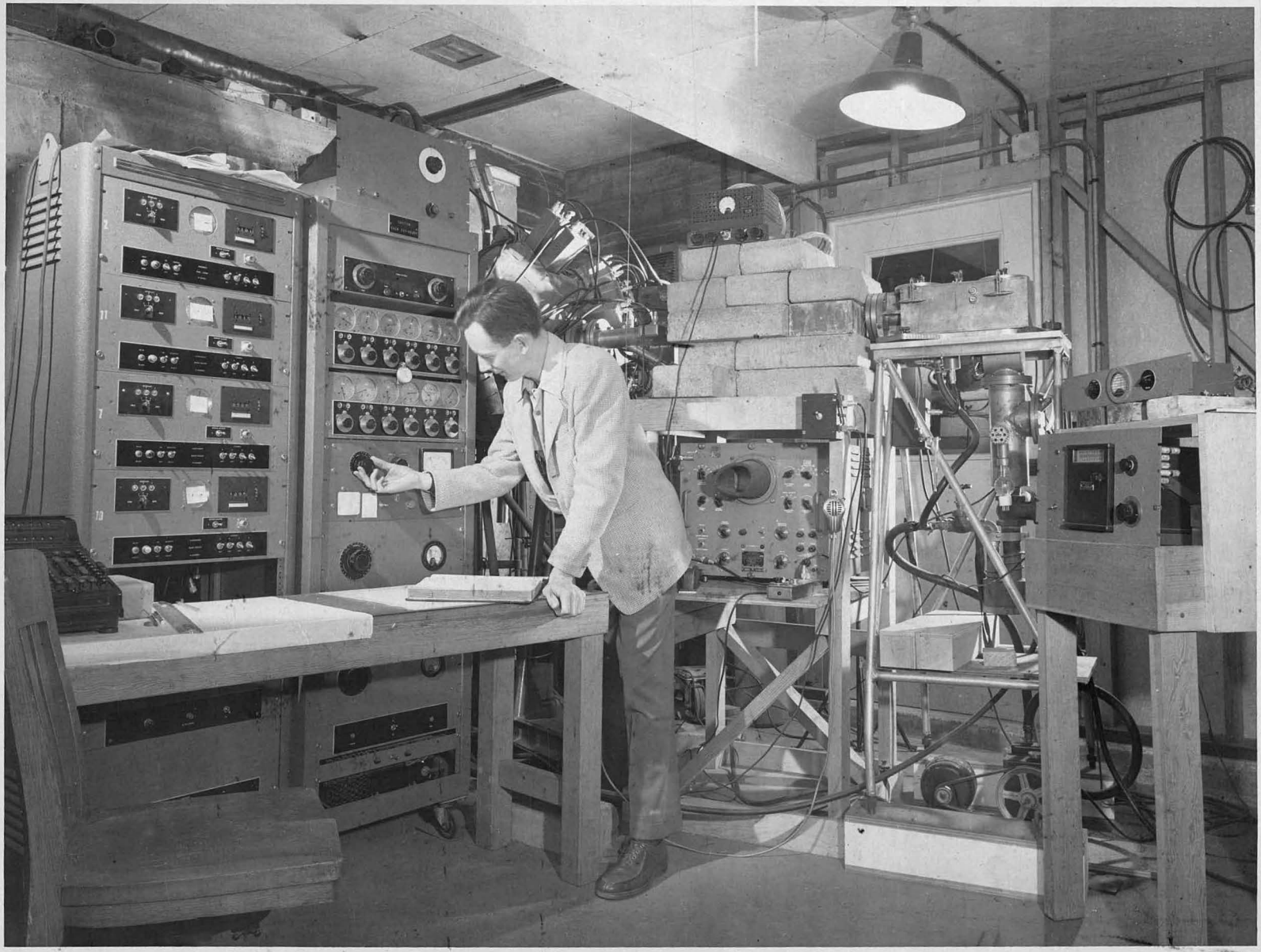

FIG. 10

OZ 847

KODAK—SAFETY 108

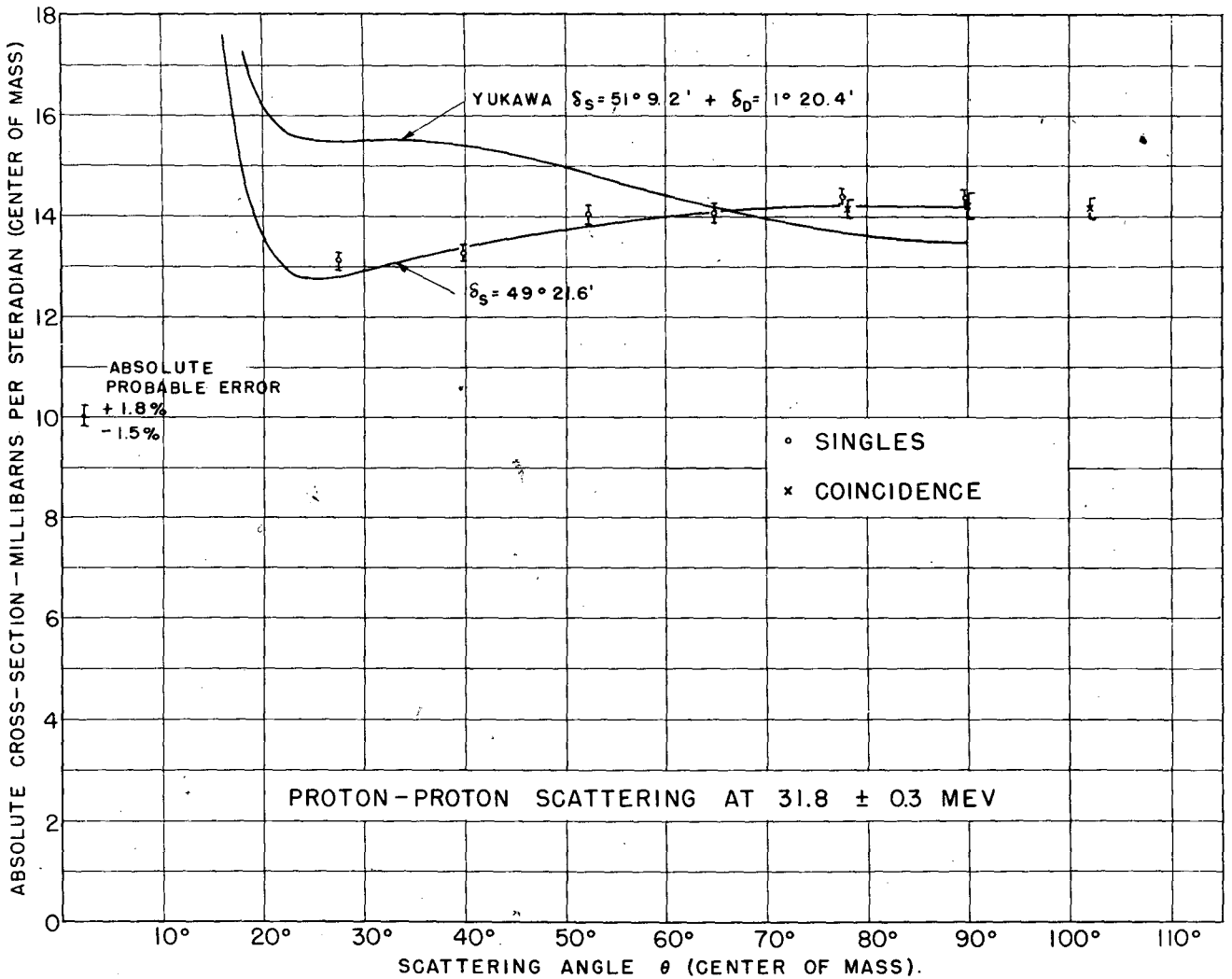
YUKAWA $\delta_S = 51° 9.2'$ + $\delta_D = 1° 20.4'$
$\delta_S = 49° 21.6'$
ABSOLUTE PROBABLE ERROR
+ 1.8%
- 1.5%
SINGLES
COINCIDENCE
PROTON-PROTON SCATTERING AT 31.8 ± 0.3 MEV
ABSOLUTE CROSS-SECTION - MILLIBARNS PER STERADIAN (CENTER OF MASS)
SCATTERING ANGLE θ (CENTER OF MASS).
0
2
4
6
8
10
12
14
16
18
10°
20°
30°
40°
50°
60°
70°
80°
90°
100°
110°

FIG. 11

OZ 811

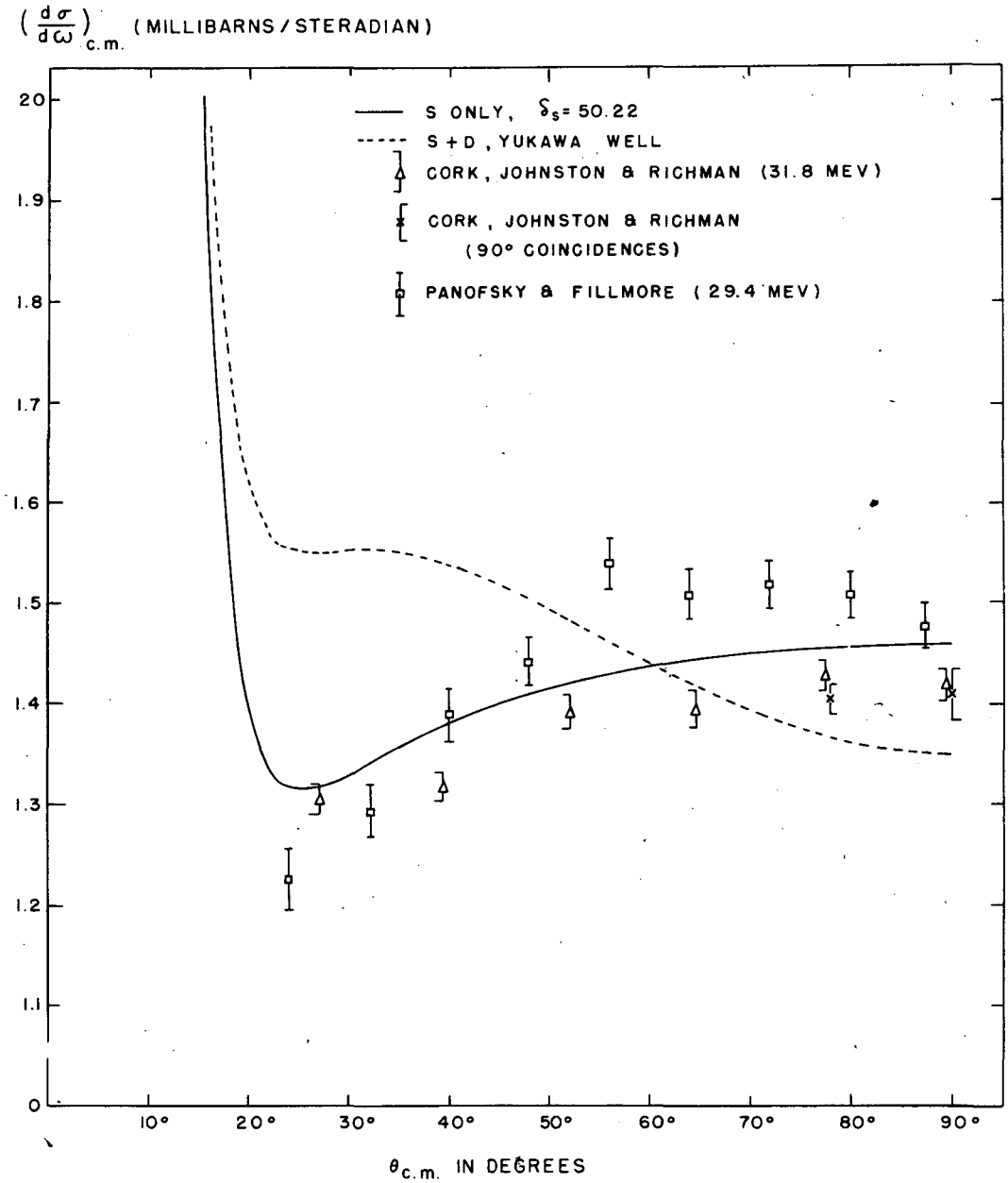
$\left(\frac{d\sigma}{d\omega}\right)_{c.m.}$ (MILLIBARNS / STERADIAN)
S ONLY, $\delta_s = 50.22$
S + D, YUKAWA WELL
CORK, JOHNSTON & RICHMAN (31.8 MEV)
CORK, JOHNSTON & RICHMAN (90° COINCIDENCES)
PANOFSKY & FILLMORE (29.4 MEV)
20
1.9
1.8
1.7
1.6
1.5
1.4
1.3
1.2
1.1
0
10°
20°
30°
40°
50°
60°
70°
80°
90°
$\theta_{c.m.}$ IN DEGREES

FIG. 12