UCRL 700
...SSIFIED
C.2

UNIVERSITY OF CALIFORNIA

Radiation Laboratory

TWO-WEEK LOAN COPY

This is a Library Circulating Copy which may be borrowed for two weeks. For a personal retention copy, call Tech. Info. Division, Ext. 5545

BERKELEY, CALIFORNIA

UCRL-700
C.2

DISCLAIMER

This document was prepared as an account of work sponsored by the United States Government. While this document is believed to contain correct information, neither the United States Government nor any agency thereof, nor the Regents of the University of California, nor any of their employees, makes any warranty, express or implied, or assumes any legal responsibility for the accuracy, completeness, or usefulness of any information, apparatus, product, or process disclosed, or represents that its use would not infringe privately owned rights. Reference herein to any specific commercial product, process, or service by its trade name, trademark, manufacturer, or otherwise, does not necessarily constitute or imply its endorsement, recommendation, or favoring by the United States Government or any agency thereof, or the Regents of the University of California. The views and opinions of authors expressed herein do not necessarily state or reflect those of the United States Government or any agency thereof or the Regents of the University of California.

UCRL 700
UNCLASSIFIED
c.2

UNIVERSITY OF CALIFORNIA

Radiation Laboratory

TWO-WEEK LOAN COPY

This is a Library Circulating Copy which may be borrowed for two weeks. For a personal retention copy, call Tech. Info. Division, Ext. 5545

BERKELEY, CALIFORNIA

UCRL-700
c.2

UCRL-700
Unclassified Distribution

cy. 3

UNCLASSIFIED

UNIVERSITY OF CALIFORNIA

Radiation Laboratory

Contract No. W-7405-eng-48

A MEASUREMENT OF THE POSITIVE π^+ DECAY LIFETIME

O. Chamberlain, R.F. Mozley, J. Steinberger, and C. Wiegand

May 10, 1950

Berkeley, California

INSTALLATION:	No. of Copies
Argonne National Laboratory	8
Armed Forces Special Weapons Project	1
Atomic Energy Commission, Washington	2
Battelle Memorial Institute	1
Brush Beryllium Company	1
Brookhaven National Laboratory	8
Bureau of Medicine and Surgery	1
Bureau of Ships	1
Carbide & Carbon Chemicals Div., Union Carbide & Carbon Corp. (K-25 Plant)	4
Carbide & Carbon Chemicals Div., Union Carbide & Carbon Corp. (Y-12 Plant)	4
Chicago Operations Office	1
Cleveland Area Office, AEC	1
Columbia University (J. R. Dunning)	1
Columbia University (G. Failla)	1
Dow Chemical Company	1
H. K. Ferguson Company	1
General Electric, Richland	6
Harshaw Chemical Corporation	1
Idaho Operations Office	1
Iowa State College	2
Kansas City Operations Branch	1
Kellex Corporation	2
Knolls Atomic Power Laboratory	4
Los Alamos Scientific Laboratory	3
Mallinckrodt Chemical Works	1
Massachusetts Institute of Technology (A. Gaudin)	1
Massachusetts Institute of Technology (A. R. Kaufmann)	1
Mound Laboratory	3
National Advisory Committee for Aeronautics	2
National Bureau of Standards	2
Naval Radiological Defense Laboratory	2
New Brunswick Laboratory	1
New York Operations Office	5
North American Aviation, Inc.	1
Oak Ridge National Laboratory	8
Patent Branch (Washington)	1
Rand Corporation	1
Sandia Laboratory	1
Santa Fe Operations Office	1
Sylvania Electric Products, Inc.	1
Technical Information Division (Oak Ridge)	15
USAF, Air Surgeon (R. H. Blount)	1
USAF, Director of Armament (C. I. Browne)	1
USAF, Director of Plans and Operations (R. L. Applegate)	1
USAF, Director of Research and Development (F. W. Bruner, and R. J. Mason)	2
USAF, Eglin Air Force Base (K. K. Compton)	1

INSTALLATION:	No. of Copies
USAF, Kirtland Air Force Base (H. G. Montgomery, Jr.)	1
USAF, Maxwell Air Force Base (F. N. Moyers)	1
USAF, NEPA Office	2
USAF, Office of Atomic Energy (A. A. Fickel, H. C. Donnelly)	2
USAF, Offutt Air Force Base (H. R. Sullivan, Jr.)	1
USAF, Wright-Patterson Air Force Base (Rodney Nudenberg)	1
U. S. Army, Atomic Energy Branch (A. W. Betts)	1
U. S. Army, Army Field Forces (James Kerr)	1
U. S. Army, Commanding General, Chemical Corps Techncial Command (J. A. MacLaughlin thru Mrs. G. Benjamin)	1
U. S. Army, Chief of Ordnance (A. R. Del Campo)	1
U. S. Army, Commanding Officer Watertown Arsenal (Carroll H. Deitrick)	1
U. S. Army, Director of Operations Research (Ellis Johnson)	1
U. S. Army, Office of Engineers (B. D. Jones)	1
U. S. Army, Office of the Chief Signal Officer (Curtis T. Clayton thru George C. Hunt)	1
U. S. Army, Office of the Surgeon General (W. S. Stone)	1
U. S. Geological Survey (T. B. Nolan)	1
U. S. Public Health Service	1
University of California at Los Angeles	1
University of California Radiation Laboratory	5
University of Rochester	2
University of Washington	1
Western Reserve University	2
Westinghouse Electric Company	4
Univ. of Rochester, Physics Department (R. E. Marshak)	1
Total	145

Information Division
Radiation Laboratory
University of California
Berkeley, California

INSTALLATION:	No. of Copies
USAF, Kirtland Air Force Base (H. G. Montgomery, Jr.)	1
USAF, Maxwell Air Force Base (F. N. Moyers)	1
USAF, NEPA Office	2
USAF, Office of Atomic Energy (A. A. Fickel, H. C. Donnelly)	2
USAF, Offutt Air Force Base (H. R. Sullivan, Jr.)	1
USAF, Wright-Patterson Air Force Base (Rodney Nudenberg)	1
U. S. Army, Atomic Energy Branch (A. W. Betts)	1
U. S. Army, Army Field Forces (James Kerr)	1
U. S. Army, Commanding General, Chemical Corps Techncial Command (J. A. MacLaughlin thru Mrs. G. Benjamin)	1
U. S. Army, Chief of Ordnance (A. R. Del Campo)	1
U. S. Army, Commanding Officer Watertown Arsenal (Carroll H. Deitrick)	1
U. S. Army, Director of Operations Research (Ellis Johnson)	1
U. S. Army, Office of Engineers (B. D. Jones)	1
U. S. Army, Office of the Chief Signal Officer (Curtis T. Clayton thru George C. Hunt)	1
U. S. Army, Office of the Surgeon General (W. S. Stone)	1
U. S. Geological Survey (T. B. Nolan)	1
U. S. Public Health Service	1
University of California at Los Angeles	1
University of California Radiation Laboratory	5
University of Rochester	2
University of Washington	1
Western Reserve University	2
Westinghouse Electric Company	4
Univ. of Rochester, Physics Department (R. E. Marshak)	1
Total	145

Information Division
Radiation Laboratory
University of California
Berkeley, California

A MEASUREMENT OF THE POSITIVE π-μ DECAY LIFETIME

O. Chamberlain, R.F. Mozley, J. Steinberger, and C. Wiegand

Radiation Laboratory, Department of Physics
University of California, Berkeley, California

May 10, 1950

The lifetime for the decay of a π meson into a μ meson and neutral particle was first measured by Richardson[1] and later by Martinelli and Panofsky.[2] The method was the same in both cases: The fraction of π mesons surviving various times of flight is measured by placing photographic detectors at various path lengths from the target.

In the experiment reported here we observe the time lag between the two bursts of fluorescence due to mesons decaying in a scintillation crystal. The first burst is due to the stopping of the entering π meson, the second to the μ-meson. As is shown in Fig. 1, a particle penetrating the first and into the second crystal starts the sweep (10^{-8} sec/mm) of an oscilloscope. The pulses in the second crystal are delayed 0.5×10^{-6} sec. to allow the sweep to start and brighten and are then photographed. If the responsible particle is a π^+ meson which stops in the crystal, it undergoes π-μ decay and two pulses appear on the trace. The μ^+ meson has a range of only 2 mm in the crystal. If its decay electron is detected some time ($.5$-2.5×10^{-6} sec) later, a neon light flashes and is photographed together with the scope trace. Only such marked traces are measured. Of these marked traces, 650 or roughly one-half, show the two pulses of the π-μ event. Five percent are calculated to be due to random delayed coincidences, and another 3 percent

---

[1] J. Richardson, Phys. Rev. 74, 1720 (1948).

[2] E.A. Martinelli and W.K.H. Panofsky, Phys. Rev. 77, 465 (1950).

due to π mesons which have decayed in flight and come to rest in the second crystal as μ mesons. The remaining traces are due to π-μ decays which are too fast to be resolved. The sweep speed of the oscilloscope is calibrated periodically with an oscillator of known frequency.

In Fig. 2 the data are presented both in differential and integral form. The integral data have the advantage of greater statistical accuracy, since they make use of all starred traces after the background subtraction. They are, however, more open to systematic error.

The mean life is (standard deviation):

$$\tau = 2.65 \pm .12 \times 10^{-8} \text{ sec. (differential data)}$$

$$\tau = 2.65 \pm .08 \times 10^{-8} \text{ sec. (integral data)}$$

The previously reported values are:

$$\tau = 1.11 {}^{+.45}_{-.35} \times 10^{-8} \text{ sec. (Richardson[1])}$$

$$\tau = 1.97 {}^{+.21}_{-.25} \times 10^{-8} \text{ sec. (Panofsky and Martinelli)}$$

The reasons for the discrepancies are not understood.

We wish to thank Professors E. McMillan and E. Segrè for their encouragement. This work was supported by the Atomic Energy Commission.

Figure Captions

Fig. 1 Block Diagram of Apparatus.

Fig. 2 Decay rate of the positive π meson. The zero-time point on the integral curve represents all marked traces minus accidental traces. The zero-time point on the differential curve represents those traces with pulse separation between 2.17 and 3.97×10^{-8} sec, the next point those between 3.98 and 5.78×10^{-8} sec, etc.

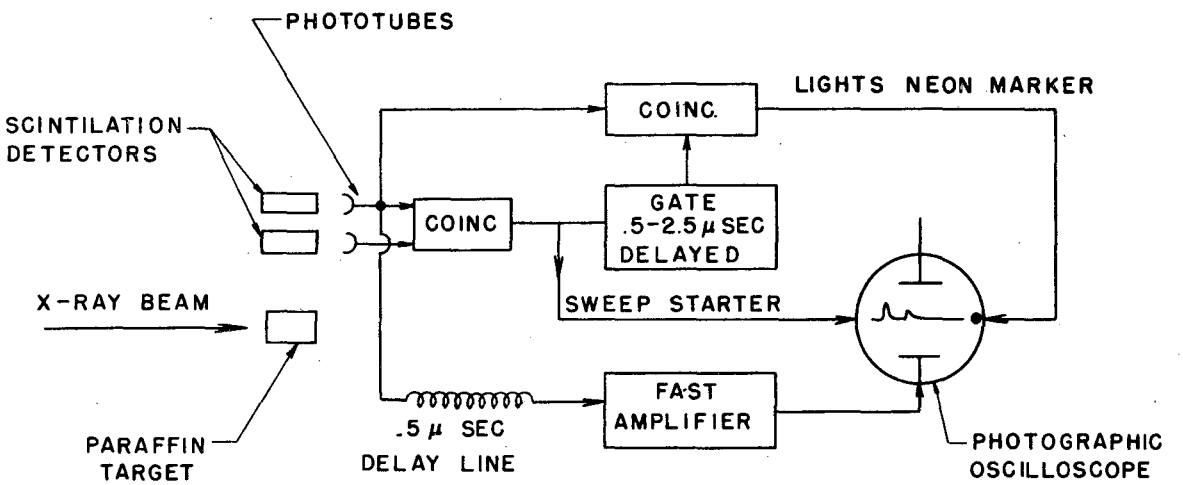
PHOTOTUBES
SCINTILATION DETECTORS
COINC.
LIGHTS NEON MARKER
COINC
GATE .5-2.5 μ SEC DELAYED
X-RAY BEAM
SWEEP STARTER
FAST AMPLIFIER
PARAFFIN TARGET
.5 μ SEC DELAY LINE
PHOTOGRAPHIC OSCILLOSCOPE

FIG. 1

MU 232

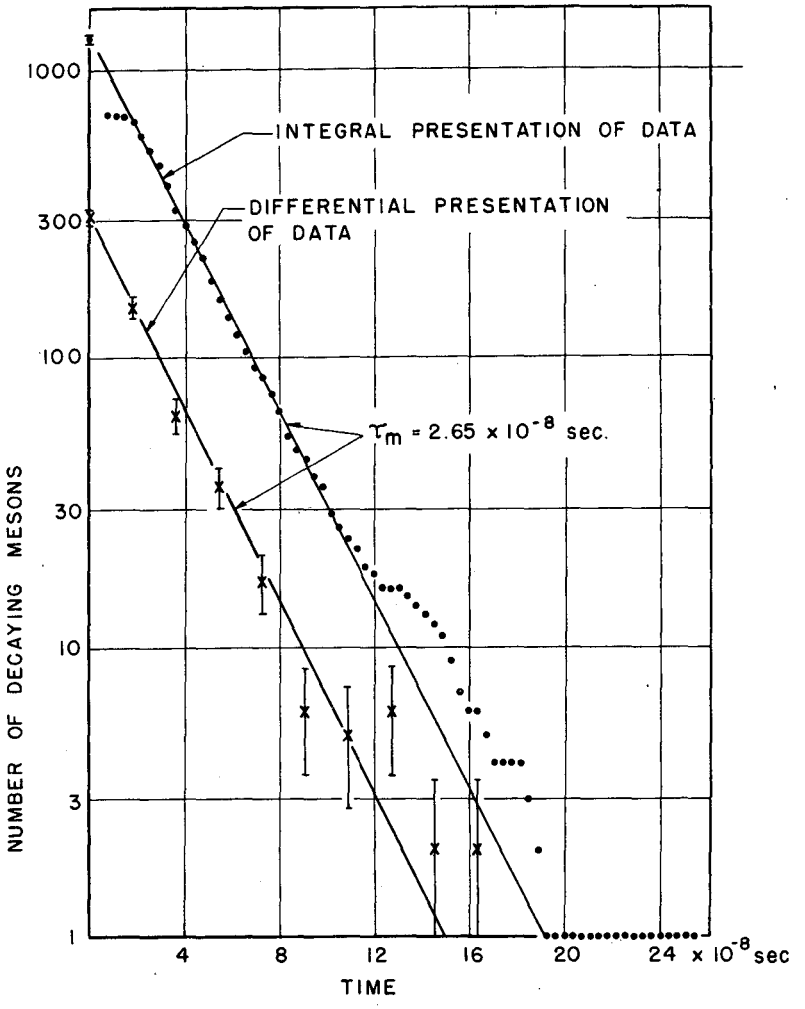
1000
300
100
30
10
3
1
NUMBER OF DECAYING MESONS
INTEGRAL PRESENTATION OF DATA
DIFFERENTIAL PRESENTATION OF DATA
$\tau_m = 2.65 \times 10^{-8}$ sec.
4
8
12
16
20
24 x 10^{-8} sec
TIME

FIG. 2

MU 233