UCRL-759

UNCLASSIFIED

UNIVERSITY OF CALIFORNIA — BERKELEY

TWO-WEEK LOAN COPY

This is a Library Circulating Copy which may be borrowed for two weeks. For a personal retention copy, call Tech. Info. Division, Ext. 5545

RADIATION LABORATORY

DISCLAIMER

This document was prepared as an account of work sponsored by the United States Government. While this document is believed to contain correct information, neither the United States Government nor any agency thereof, nor the Regents of the University of California, nor any of their employees, makes any warranty, express or implied, or assumes any legal responsibility for the accuracy, completeness, or usefulness of any information, apparatus, product, or process disclosed, or represents that its use would not infringe privately owned rights. Reference herein to any specific commercial product, process, or service by its trade name, trademark, manufacturer, or otherwise, does not necessarily constitute or imply its endorsement, recommendation, or favoring by the United States Government or any agency thereof, or the Regents of the University of California. The views and opinions of authors expressed herein do not necessarily state or reflect those of the United States Government or any agency thereof or the Regents of the University of California.

Copy 2

UCRL 759
Unclassified Distribution

UNIVERSITY OF CALIFORNIA

Radiation Laboratory

Contract No. W-7405-eng-48

PHYSICS DIVISION QUARTERLY REPORT

February, March, and April, 1950

June 20, 1950

Berkeley, California

INSTALLATION	No. of Copies
Argonne National Laboratory	8
Armed Forces Special Weapons Project	1
Atomic Energy Commission, Washington	2
Battelle Memorial Institute	1
Brush Beryllium Company	1
Brookhaven National Laboratory	8
Bureau of Medicine and Surgery	1
Bureau of Ships	1
Carbide and Carbon Chemicals Div., Union Carbide and Carbon Corp. (K-25 Plant)	4
Carbide and Carbon Chemicals Div., Union Carbide and Carbon Corp. (Y-12 Plant)	4
Chicago Operations Office	1
Cleveland Area Office, AEC	1
Columbia University (J. R. Dunning)	2
Columbia University (G. Failla)	1
Dow Chemical Company	1
H. K. Ferguson Company	1
General Electric Company, Richland	3
Harshaw Chemical Corporation	1
Idaho Operations Office	1
Iowa State College	2
Kansas City Operations Branch	1
Kellex Corporation	2
Knolls Atomic Power Laboratory	4
Los Alamos Scientific Laboratory	3
Mallinckrodt Chemical Works	1
Massachusetts Institute of Technology (A. Gaudin)	1
Massachusetts Institute of Technology (A. R. Kaufmann)	1
Mound Laboratory	3
National Advisory Committee for Aeronautics	2
National Bureau of Standards	2
Naval Radiological Defense Laboratory	2
New Brunswick Laboratory	1
New York Operations Office	5
North American Aviation, Inc.	1
Oak Ridge National Laboratory	8
Patent Branch, Washington	1
Rand Corporation	1
Sandia Laboratory	1
Sante Fe Operations Office	1
Sylvania Electric Products, Inc.	1
Technical Information Division, Oak Ridge	15
USAF, Air Surgeon (R. H. Blount)	1
USAF, Director of Armament (C. I. Browne)	1
USAF, Director of Plans and Operations (R. L. Applegate)	1
USAF, Director of Research and Development (F. W. Bruner and R. J. Mason)	2
USAF, Eglin Air Force Base (A. C. Field)	1

INSTALLATION	No. of Copies
USAF, Kirtland Air Force Base (M. F. Cooper)	1
USAF, Maxwell Air Force Base (F. N. Moyers)	1
USAF, NEPA Office	2
USAF, Office of Atomic Energy (A. A. Fickel and H. C. Donnelly)	2
USAF, Offutt Air Force Base (H. R. Sullivan, Jr.)	1
USAF, Wright-Patterson Air Force Base (Rodney Nudenberg)	1
U. S. Army, Atomic Energy Branch (A. W. Betts)	1
U. S. Army, Army Field Forces (James Kerr)	1
U. S. Army, Commanding General, Chemical Corps Technical Command (J. A. MacLaughlin thru Mrs. G. Benjamin)	1
U. S. Army, Chief of Ordnance (A. R. Del Campo)	1
U. S. Army, Commanding Officer Watertown Arsenal (C. H. Deitrick)	1
U. S. Army, Director of Operations Research (Ellis Johnson)	1
U. S. Army, Office of Engineers (Allen O'Leary)	1
U. S. Army, Office of the Chief Signal Officer (Curtis T. Clayton thru G. C. Hunt)	1
U. S. Army, Office of the Surgeon General (W. S. Stone)	1
U. S. Geological Survey (T. B. Nolan)	1
U. S. Public Health Service	1
University of California at Los Angeles	1
University of California Radiation Laboratory	5
University of Rochester	2
University of Washington	1
Western Reserve University	2
Westinghouse Electric Company	4
University of Rochester (R. E. Marshak)	1
California Institute of Technology (R. F. Bacher)	1
Total	144

Information Division
Radiation Laboratory
University of California
Berkeley, California

TABLE OF CONTENTS

	Page
I GENERAL PHYSICS RESEARCH	
Cloud Chamber Program	4
Film Program	8
The Neutral Meson Program on the 184-inch Cyclotron	9
Magnetic Particle Spectrometer	10
Development of Proportional Counters for Fast Neutron Surveys	11
Variation of Total Cross Sections of Nuclei with Neutron Energy	12
Hi-Speed Oscilloscope	13
Proton-Proton Scattering	14
Deuteron-Proton Scattering	15
A Measurement of the Positive π-μ Decay Lifetime	16
Production of Neutral Mesons in the Synchrotron Beam	17
Proton-Proton Scattering as a function of Energy	18
Inelastic Scattering	19
Observation of Fast Neutrons Produced by π^- Capture	20
Analysis of Photographic Plates Exposed to Mesons from Proton-Proton Collisions	21
Capture of Negative π Mesons in Hydrogen	22
Meson Production	23
Synchrotron Studies	24
Theoretical Physics	25
II ACCELERATOR OPERATION AND DEVELOPMENT	
184-inch Cyclotron	26
60-inch Cyclotron	27
Synchrotron	33
Linear Accelerator and Van de Graaff Machines	35
Bevatron Development	36

I GENERAL PHYSICS RESEARCH

1. Cloud Chamber Program

Wilson M. Powell

Scattering of Deuterons by 90 Mev Neutrons. The experiment on the scattering of deuterons by 90 Mev neutrons has been continued and all the first measurements reported in UCRL 627 have been rechecked. The new results differ only a little from the earlier results, and the rechecking has made no significant change. The new results are summarized in Tables I and II.

An analysis of the data shows the following results. The numbers given in brackets is the actual number of events observed and the other numbers are those corrected for the limited solid angle observed. The factors used to correct the observed numbers are explained in the text and given in the tables of the previous quarterly report, UCRL 627.

There were 620 (248) deuterons from neutrons of energy greater than 45 Mev, 64 (31) deuterons from neutrons between 10 Mev and 45 Mev, 73 (45) from neutrons between 4 Mev and 10 Mev.

For the protons there are 787 (540) from neutrons of energy greater than 45 Mev. This neutron energy was estimated by assuming that the protons were made by elastic scattering. The estimated neutron energy was then the energy of the proton divided by the square of the cosine of the angle of scattering of the proton relative to the neutron beam. Another group of protons from neutrons of energy greater than 10 Mev and less than 45 Mev contained 121 (95) protons. There were 115 (55) protons with energies between 4 Mev and 10 Mev and 79 (47) with energies below 4 Mev. Also there were 88 (38) protons going backwards. The sum of all of these protons is 1192 (737) of which 39 were counted twice because the protons scattered at angles near 90° were included among those having energies below 4 Mev and those produced by 45 Mev or greater neutrons. This leaves 1153 (737) protons.

The 88 backward protons and the 787 protons come from neutrons of energies greater than 45 Mev. This makes a total of 787 protons surely from the higher energy neutrons. An additional group of 44 protons can be added to correspond to slow protons going forward produced by the same process as that responsible for the 88 protons going backward. This gives a total of 919 protons. This is the smallest number of protons that it would be reasonable to assume came from neutrons of energies greater than 45 Mev.

The maximum number of protons would be 1153 but this number can be reduced if we assume that at least 10 percent of the smallest number of protons, or 88, were produced by neutrons of energies less than 45 Mev. This leaves a maximum number for the protons of 1065. To summarize:

Maximum number of protons	1065
Minimum number of protons	919
Number of deuterons	688
Maximum total	1753
Minimum total	1607
Mean of the maximum and minimum	1680

If the mean value of 1680 events is taken to correspond to the total cross section of 117 millibarns[1], then it is possible to assign cross sections to the following processes:

Elastically scattered deuterons	48 millibarns
Backward protons	6 millibarns

The best estimate for the neutron-neutron cross section which is strictly a guess is possibly 25 millibarns. Fig. 1 gives a comparison between the neutron-proton cross section in the laboratory system and the angular distribution of the protons knocked out of the deuterons when they are bombarded by the 90 Mev neutrons. The upper curve gives the differential n-p scattering cross section and the lower curve marked "experimental" is for the protons from the deuterons.

Fig. 2 shows the data for the elastically scattered deuterons. The solid theoretical curve is the result of a preliminary calculation made by G. F. Chew[2] which agrees as well as expected with experiment. The points from an experiment by Stern and Blum[3] are preliminary results from the elastic scattering of protons when bombarded by 180 Mev deuterons. From a particular theoretical point of view these should be in agreement with the cloud chamber results if the neutron-neutron cross section and the proton-proton cross section are the same. The two results agree to within experimental error, but no great significance can be attached to any of these points at this juncture and their value lies only in indicating the present trend of this experiment.

The fire in the laboratory has delayed interpretation of the results of this experiment, but no original data has been lost.

---

[1] Cook, McMillan, Peterson, Sewell, Phys. Rev. 75, 7 (1949)
[2] G. F. Chew, Bull. Am. Phys. Soc. 25, No. 3, p. 28 (1950)
[3] Private communication

TABLE I

	Deuterons									
	0-10	10-20	20-30	30-40	40-50	50-60	60-70	70-80	80-90	Total
Neutrons > 45 Mev	12	19	11	10	16	24	43	69	44	248
10 < Neutrons < 45	1	5	2	4	1	2	9	7	0	31
4 < Neutrons < 10	0	12	11	4	2	7	9	0	0	45
0 < Neutrons < 4	15	36	34	12	12	5	0	0	0	10
	Deuterons Corrected for Limited Solid Angle									
Neutrons > 45 Mev	12	19	11	14.6	31	57	116	199	131	670.6
10 < Neutrons < 45	1	5	2	5.8	1.9	4.8	24.2	20.2	0	63.9
4 < Neutrons < 10	0	12	11	5.8	2.9	16.7	24.2	0	0	72.6
0 < Neutrons < 4	15	36	34	17.6	23.2	12	0	0	0	141.8
										898.9
From Neutrons > 45 Mev										
Mb/steradian	8.9	4.7	1.67	1.62	2.8	4.16	8.25	13.2	8.4	
Statistical Errors	±2.6	±1.1	± .5	± .5	± .7	± .85	±1.2	±1.6	±1.3	

TABLE II

	Protons									
	0-10	10-20	20-30	30-40	40-50	50-60	60-70	70-80	80-90	
Neutrons > 45 Mev	37	131	141	85	51	35	21	25	14	
10 > Neutrons > 45	6	19	34	20	12	4	0	0	0	
Protons 10-4 Mev	2	2	6	4	10	12	8	10	4	12 of these 13 counted in first row
Protons < 4 Mev	4	6	12	5	6	4	4	6	9	
	Corrected for Limited Solid Angle									
Neutrons > 45 Mev	37	131	141	125	99	84	56	72	42	787
10 > Neutrons > 45	6	19	34	29	23	10	0	0	0	121
Protons 10-4 Mev	2	2	6	6	19	29	21	29	12	117
Protons < 4 Mev	4	6	12	7	12	10	11	17	27	79
									Total	1104
									But 39 counted twice	
								Total backward protons		88
								Grand total protons		1192

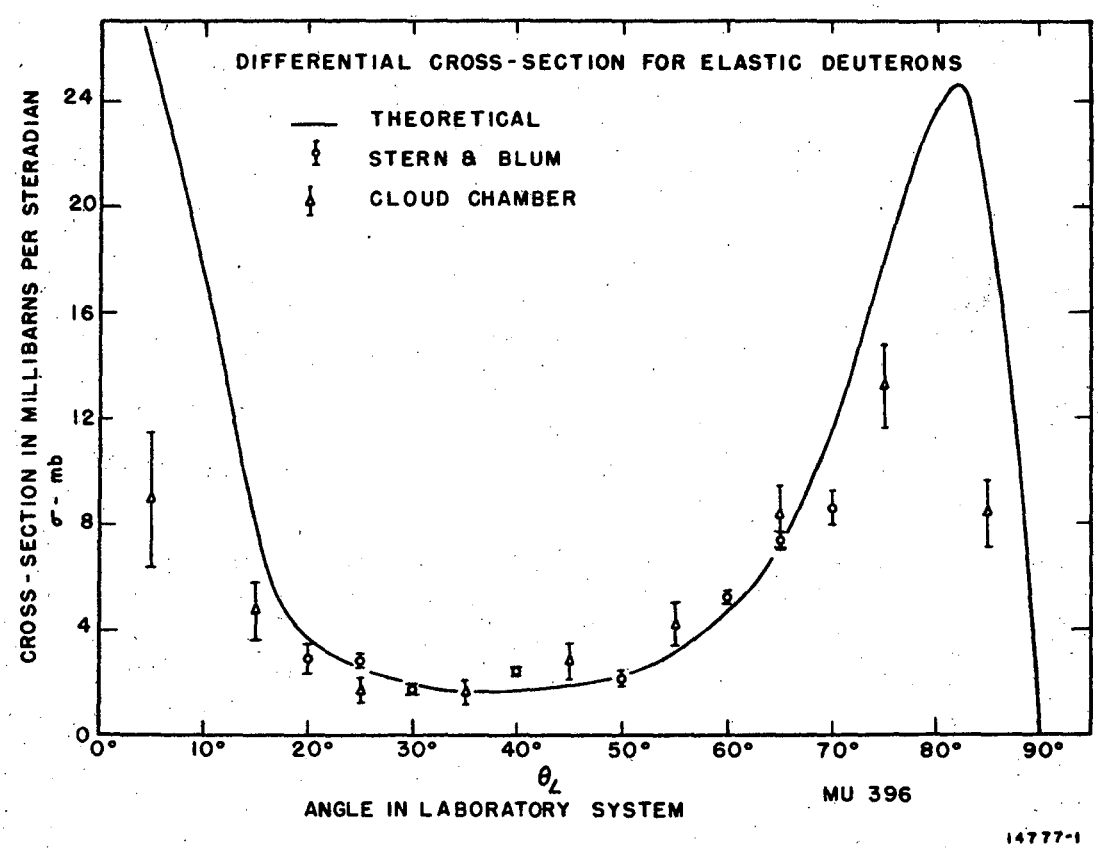
DIFFERENTIAL CROSS-SECTION FOR ELASTIC DEUTERONS
THEORETICAL
STERN & BLUM
CLOUD CHAMBER
CROSS-SECTION IN MILLIBARNS PER STERADIAN
σ - mb
0
4
8
12
16
20
24
0°
10°
20°
30°
40°
50°
60°
70°
80°
90°
θL
ANGLE IN LABORATORY SYSTEM
MU 396
14777-1

Fig. 1

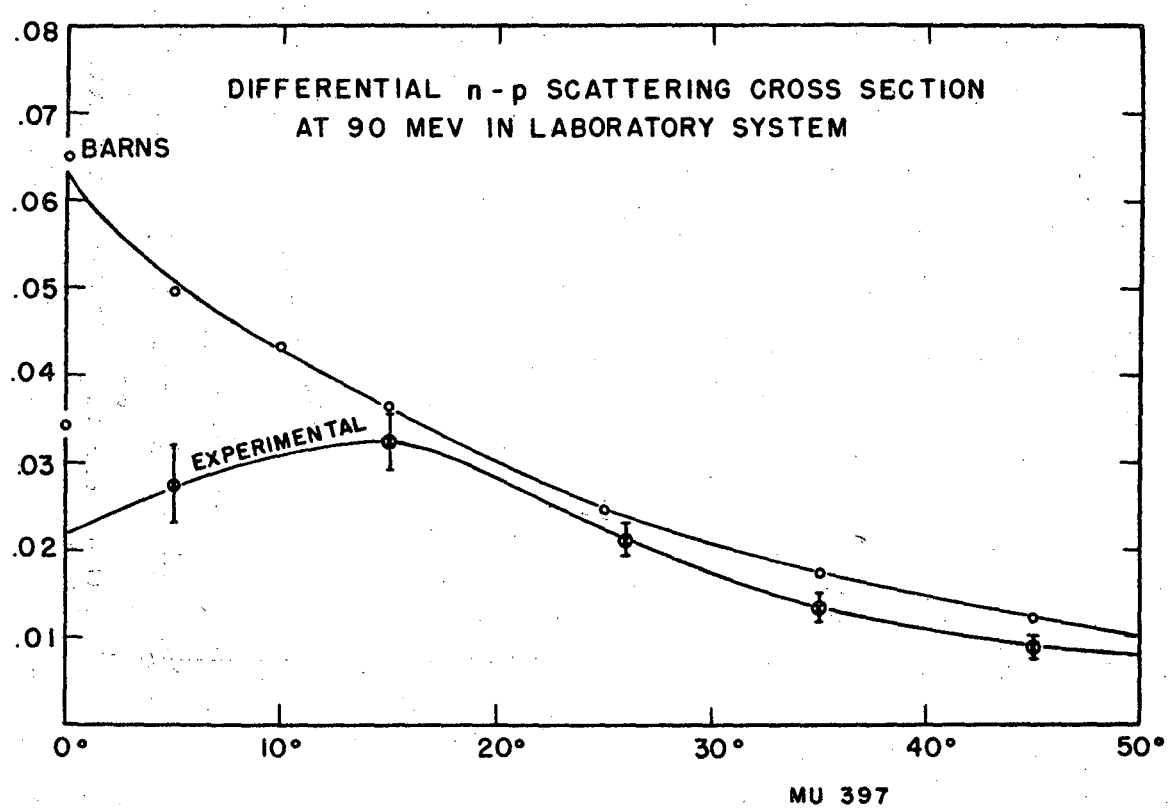
DIFFERENTIAL n-p SCATTERING CROSS SECTION
AT 90 MEV IN LABORATORY SYSTEM
BARNS
.08
.07
.06
.05
.04
.03
.02
.01
EXPERIMENTAL
0°
10°
20°
30°
40°
50°
MU 397

Fig. 2

2. Film Program

Eugene Gardner, Walter H. Barkas*, F. M. Smith and Hugh Bradner

The study of the possible branching ratio in the decay of the π^+ meson is continuing. To date, of 191 positive mesons observed to stop in photographic emulsion, only two showed no decay into μ^+ mesons. Calculation shows that the masses of these two particles are consistent with the π mass.

Electron sensitive plates bombarded by 30 Mev π^- mesons are being examined for nuclear interactions. Mesons are identified by small angular scattering and grain count. Fifty-two centimeters of track have been examined showing 12 scatters between 6° and 9°, 1 scatter of 45°, and 1 of 117°. Thus far no disintegrations have been observed.

---

* Office of Naval Research, San Francisco, California.

3. The Neutral Meson Program on the 184-in. Cyclotron

B. J. Moyer, W. E. Crandall, and Roger Hildebrand

During the past quarter the neutral meson research program on the cyclotron has been largely concerned with the continuing development of instrumentation. This has included progress on the pair spectrometer which is to employ scintillation counters with fast electronics, and also progress on the coincicence apparatus for observing the coincidences between the high energy photons arising from neutral meson decay. Together with the electronics developments applying to the above instruments, there has been constructed a high speed oscilloscope capable of time measurements to the order of 10^{-9} seconds.

The pair spectrometer magnet has been completed and its magnetic field surveyed. Models of the lucite light pipes, which are necessary to deliver the scintillation flashes to photomultipliers located outside the magnetic field, have been set up and successfully tested. Distributed type preamplifiers which will deliver the signal from the photo-multiplier tube to the coincidence net work have been made and tested. The problem of sufficiently large crystal phosphors to present a desirably large solid angle in the collection of the electron pairs has been solved by the successful growth of stilbene crystals of the order of 2 inches x 3-1/2 inches x 3/4 inches, which are reasonably free of cracks and cloudiness. More recently also the reported success of liquid phosphors assures freedom from difficulty in the scintillating element.

The apparatus for observing high energy photon coincidences is similar to that employed by Steinberger in a similar experiment at the synchrotron except that because of the severe neutron background associated with the cyclotron beam it is necessary to revise electronic equipment so as to provide coincidence resolving times of the order of 10^{-8} seconds. The final stages of testing on this electronics are in progress and the apparatus is otherwise complete.

The high speed oscilloscope mentioned above has proved capable of making time measurements down to 10^{-9} seconds. The total sweep time is about 2×10^{-8} seconds for a trace 3 inches long. Plans are in progress for applying this to problems involving delayed coincidences, after the immediate use in testing the apparatus discussed above.

Besides this program of instrument development in the neutral meson studies, further measurements have been made, using the proportional counter pair spectrometer, of neutral meson yield versus proton energy, and of the angular distribution of the photons with respect to the proton direction at constant proton energy. These measurements have more accurately substantiated the previous tentative conclusion that the excitation function for producing neutral mesons is essentially the same, in both the absolute yield and energy dependence, as for producing charged π mesons.

4. Magnetic Particle Spectrometer

J. Hadley and J. Cladis

Further measurements of the energy distribution of the neutron beam resulting from bombardment of a beryllium target by 340 Mev protons in the 184-inch cyclotron have been made. Preliminary results have been confirmed in that the spectrum is found to consist of a peak centered at about 260 Mev and having a width at half maximum of about 100 Mev. Because of rather poor energy resolution and large statistical errors, it is not possible to confirm or deny the possibility of a large group of neutrons at energies of the order of the proton beam energy. It is felt that the expenditure of more cyclotron time on this problem in order to improve the resolution and statistical errors would not be justified, in particular as the results of W. Knox show that multiple traversals of the target by the proton beam cause a sufficient spread in the energy of the effective proton beam to wash out any detailed structure in the neutron spectrum.

Some preliminary measurements of the momentum distribution of charge particles ejected from carbon, copper and lead nuclei by the 260 Mev neutron beam have been made. No deuterons of greater than 180 Mev energy or tritons of greater than 120 Mev energy were observed. At lower energies it would not be possible to distinguish these particles from protons with the present apparatus.

The particles observed from all three elements, if assumed to be protons, have an energy spectrum falling off smoothly with increasing energy and becoming zero at energy values about equal to the highest energy neutrons, or about 340 Mev.

The relative differential cross sections for proton production at 22-1/2 degrees, integrated over energies above 20 Mev are in the ratio 1:2.46:6.05 for carbon, copper and lead. Similar cross sections found by Hadley and York, using a 90 Mev neutron beam, were in the approximate ratio 1:1.7:2.3.

5. Development of Proportional Counters for Fast Neutron Surveys

Arthur Redmond

Proportional counters of the hydrogenous wall type, for fast neutron surveys have been constructed with various wall thicknesses.

All show plateaus and sensitivities much as expected for Po-Be neutrons. An unexpected decline in sensitivity over a period of days has appeared, which may be due to evolution of gases from the polyethylene walls.

If this effect proves to be difficult to cure, use will be made of the gas-flow arrangement to provide constantly fresh counter gas.

6. Variation of Total Cross Sections of Nuclei with Neutron Energy

James DeJuren

The variations of nuclear total cross sections with neutron energy have been investigated in the region from 110 to 270 Mev. Carbon, aluminum, copper and lead have been investigated extensively in this interval and all four exhibit plateaus in their cross section values in the region from 200 to 270 Mev. The neutrons were formed by bombarding a 0.5 inch Be target with protons. For proton energies from 180 to 350 Mev the resulting mean neutron energy is approximately 70 Mev less than the proton energy. Bismuth fission was used for the neutron detection.

The detector was placed behind a 7 ft. thick concrete block having a hollow center and mounted 23 ft. from the target in line with the center of the neutron beam. A concrete collimator, 5 ft long, 4-1/4 in. x 4-1/4 in. in cross section with a 2 in. diameter opening was used to collimate the beam. It could be swivelled into line for the target settings (from 54 in. to 81 in. radius) and brass bars were placed about it to reduce background. The detector was placed 6 ft. to the rear of the concrete block and the monitor was placed to one side in a region where the numbers of scattered neutrons from the attenuating materials was negligible. These materials were placed on a holder immediately in front of the block in line with target, collimator and detector. Background was of the order of 5 percent of the detector counting rate with no absorbers present.

The hydrogen total cross section was measured for mean neutron energies of 160 and 220 Mev using pentane-carbon difference. The values obtained were:

Mean Neutron Energy	$\sigma_H \times 10^{27}$ cm^2
160	54.8 ± 6.0
	50.4 ± 2.9
	51.2 ± 2.6 (ave.)
220 Mev	41.0 ± 4.1
	41.0 ± 2.9
	41.0 ± 2.4 (ave.)

A forthcoming paper will summarize all of the results.

7. Hi-Speed Oscilloscope

Leland Neher

The oscilloscope originally referred to in the Summary Report for January 15, to February 15, 1950 has been recently modified to further facilitate the development and construction of short time counting apparatus. The modifications have consisted in the use of new DuMont cathode ray tube type 1056-P11, in place of the early experimental model type K1017-P11. The new tube emits about 10 times the light intensity as compared to the old model. Both tubes have coaxial cable fittings to the deflecting plates. Total accelerating potentials up to 35 kilovolts are used. A further modification has been to use vacuum tubes to generate the sweep voltage in place of the rather unreliable gas tube. A positive pulse of about 5 volts will trigger the sweep with good accuracy. The shortest sweep length is about 10^{-8} sec. per inch of tube face at a deflection sensitivity of 200 volts per inch. The pulse initiating the sweep can be fed directly or through a distributed amplifier to the vertical deflection plates. On the 10^{-8} sec. per inch sweep the pulse jitter is in the order of 10^{-10} sec. for a rise time of 10^{-9} seconds. Sweep speeds down to 10^{-5} sec. per inch are also available.

8. Proton-Proton Scattering

O. Chamberlain, E. Segrè and C. Wiegand

The apparatus described in the last quarterly report has been extensively used to obtain the scattering cross section at 345 Mev. The experiments were intended to reach a fair precision and for this reason we have carefully examined the various sources of error. The results can be summarized by stating that the differential scattering cross section between 20° and 90° in the center of mass system is 4 millibarns. This number on the basis of statistics and estimated errors should be correct to about 5 percent but it disagrees with the previous gas counter results by about 20 percent. The cause of this systematic error is not not yet known and we are trying to find it.

The cyclotron beam was reduced in energy to 249 and 167 Mev by passing it through a lithium absorber. The p-p cross section was measured at these two energies at an angle of 90°. We obtained again approximately 4 millibarns.

9. Deuteron-proton Scattering

C. Stern and A. Bloom

In the general scattering program of neutrons and protons d-p and d-n scattering for 90 Mev are important data because combined with the results of n-p and p-p investigations they should give information on the n-n interaction.

Using the same apparatus as that used for p-p scattering the elastic d-p scattering cross section was measured for angle ϕ of the deuteron varying between 40° and 160° in the center of mass system. The deuterons have an energy of 190 Mev in the lab system. The results are as follows:

ϕ	40°	50°	60°	80	100	120	130	140	150	160
$\frac{d\sigma}{dw}$	6.3	4.3	2.6	1.2	0.85	0.5	0.75	0.75	0.7	1.4

millibarns per steradian.

They are based only on one run each and are to be considered provisional.

10. A Measurement of the Positive π-μ Decay Lifetime

O. Chamberlain, R. F. Mozley, J. Steinberger, C. Wiegand

The lifetime for the decay of a π meson into a μ meson and neutral particle was first measured by Richardson[1] and later by Martinelli and Panofsky[2]. The method was the same in both cases: The fraction of π mesons surviving various times of flight is measured by placing photographic detectors at various path lengths from the target.

In the experiment reported here we observe the time lag between the two bursts of fluorescence due to mesons decaying in a scintillation crystal. The first burst is due to the stopping of the entering π meson, the second to the μ meson. As is shown in Fig. 1, a particle penetrating the first and into the second crystal starts the sweep (10^{-8} sec/mm) of an oscilloscope. The pulses in the second crystal are delayed 0.5×10^{-6} sec. to allow the sweep to start and brighten and are then photographed. If the responsible particle is a π^+ meson which stops in the crystal, it undergoes π-μ decay and two pulses appear on the trace. The μ^+ meson has a range of only 2 mm in the crystal. If its decay electron is detected some time ($.5$-2.5×10^{-6} sec) later; a neon light flashes and is photographed together with the scope trace. Only such marked traces are measured. Of these marked traces, 650 or roughly one-half, show the two pulses of the π-μ event. Five percent are calculated to be due to random delayed coincidences, and another 3 percent due to π^- mesons which have decayed in flight and come to rest in the second crystal as μ mesons. The remaining traces are due to π-μ decays which are too fast to be resolved. The sweep speed of the oscilloscope is calibrated periodically with an oscillator of known frequency.

In Fig. 2 the data are presented both in differential and integral form. The integral data have the advantage of greater statistical accuracy, since they make use of all starred traces after the background subtraction. They are, however, more open to systematic error.

The mean life is (standard deviation):

$$\pi = 2.65 \pm .12 \times 10^{-8} \text{ sec. (differential data)}$$

$$\pi = 2.65 \pm .08 \times 10^{-8} \text{ sec. (integral data)}$$

The previously reported values are:

$$\pi = 1.11 \pm {}^{.45}_{.35} \times 10^{-8} \text{ sec. (Richardson[1])}$$

$$\pi = 1.97 \pm {}^{.21}_{.25} \times 10^{-8} \text{ sec. (Panofsky and Martinelli)}$$

The reasons for the discrepancies are not understood.

---

[1] J. Richardson, Phys. Rev. 74, 1720 (1948).
[2] E. A. Martinelli and W. K. H. Panofsky, Phys Rev. 77, 465 (1950).

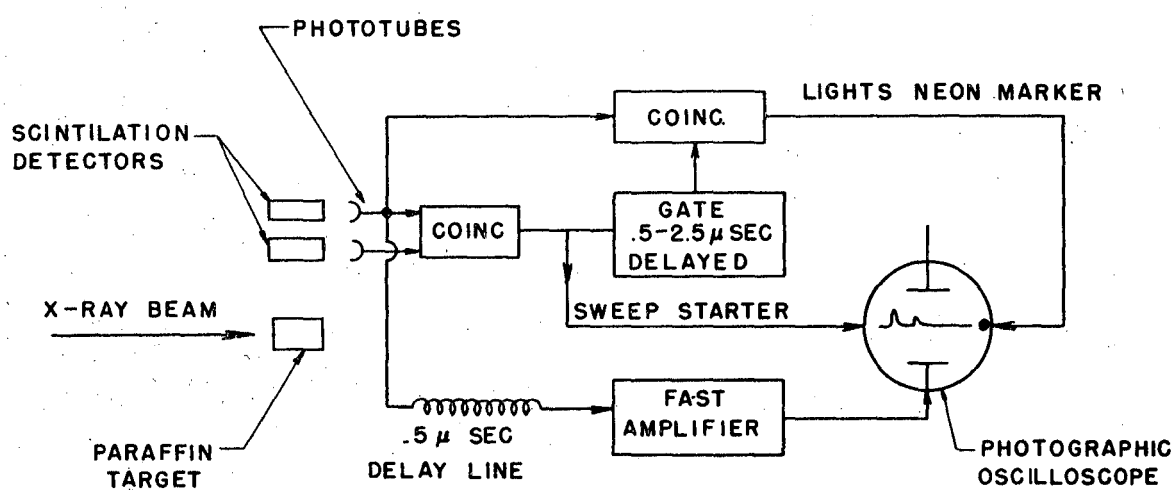

FIG. 1

MU 232

Block Diagram of Apparatus

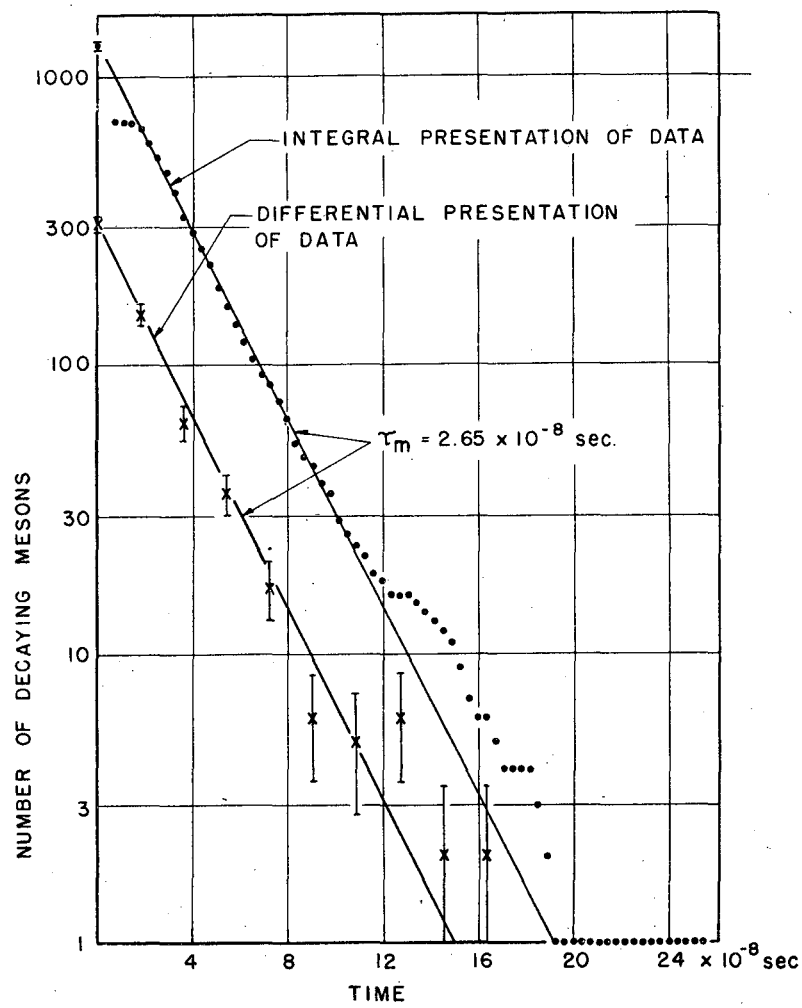

FIG. 2 MU 233

Decay rate of the positve π meson. The zero-time point on the integral curve represents all marked traces minus accidental traces. The zero-time point on the differential curve represents those traces with pulse separation between 2.17 and 3.97 x 10^{-8} sec, the next point those between 3.98 and 4.78 x 10^{-8} sec, etc.

11. Production of Neutral Mesons in the Synchrotron Beam

J. Steinberger, W. K. H. Panofsky, J. Steller

Gamma-gamma coincidences have been observed arising from various materials bombarded in the synchrotron beam. These coincidences show a strong angular correlation which corresponds precisely to the correlation computed from the kinematics of a neutral meson disintegrating in flight into two gamma-rays. The gamma-rays have been positively identified by transition curves and also by the range of the conversion electrons produced by the gamma-rays in lead. Thus far the following data pertaining to this problem have been taken: 1. Angular distributions. The direction of the emitted mesons must lie in the plane defined by the two gamma-ray counters and the target. It is thus possible to measure an angular distribution of the π^0 meson by rotating the normal to the plane about in a plane containing the beam. These curves have been taken on carbon and show an angular distribution considerably more forward than the corresponding curves as observed for the photo production of charged mesons. 2. Z Dependence. Yields of neutral mesons have been measured as a function of Z for six elements. A cross section for hydrogen was obtained by $C-CH_2$ differences. The results show a small decrease per nucleon for increasing Z. However, the yield for hydrogen is not anomalously large as was observed in the case of charged meson production. This experiment definitely establishes the reality of the neutral meson.

12. Proton-Proton Scattering as a Function of Energy

Bruce Cork

It has been possible to modify the field distribution in the linear accelerator cavity such that a small beam of variable energy can be produced. After magnetic analysis such a beam is then useful for studying nuclear processes as a function of energy. Using this beam the absolute cross section of proton-proton scattering at 45° laboratory angle has been studied using a gas scatterer and two proportional counter telescopes in 90° coincidence. The results join smoothly onto the low energy points. The results are fully compatible with pure S scattering in the entire range from low energies to 32 Mev.

13. Inelastic Scattering

J. Benvenisti, Roy D. Britton

Experiments are in progress investigating the level structure of helium by inelastic scattering of protons. This is being done both with photographic plates and counter techniques.

In the former inelastic scattering experiments with protons, there has been some evidence for inelastic scattering in heavy elements corresponding to an energy lower than the barrier height. Some questions were raised as to whether this anomalous effect is due to either low atomic number impurities in the target or due to low energy contamination of the beam. Both of these points are being investigated in detail in order to verify the existence or non-existence of the effect.

14. Observation of Fast Neutrons Produced by π^- Capture

Kenneth Crowe

When a π^- meson is captured in materials other than hydrogen, star formation is likely to result. It is known from photographic plate evidence that only 75 percent of the stars result in visible ionizing radiation. The remaining 25 percent are expected to be processes in which one or more fast neutrons are emitted. This process is being investigated by observing a secondardy target exposed to π^- mesons produced in a primary target in the 184-inch cyclotron. The fast neutrons from this secondary target are being permitted to multiply in a uranium block and are then moderated in a water tank and counted with BF_3 counters. Preliminary experiments have shown this effect to be present despite considerable background problems. More accurate measurements are in progress and in particular it is being planned to look for the neutrons produced by π^- absorption in deuterium. This experiment will give essential qualitative information on the nature of the π^- meson. A deuterium high pressure gas handling system is under construction to aid in this experiment and also to produce high pressure targets for the observation of gamma-rays from deuterium targets after π^- absorption.

15. Analysis of Photographic Plates Exposed to Mesons from Proton-Proton Collisions

V. Peterson, Ed Eloff, Dora Sherman

A new exposure has been made using the liquid hydrogen target for the analysis of π^+ mesons produced in proton-proton collisions. The technique has been considerably improved by the use of an analyzing magnet which eliminates the background produced by elastically scattered protons. Analysis of these plates has confirmed the former conclusion that the meson energy distribution is peaked towards the high energy end. This peak presumably has to do with the attractive forces between the final neutron and proton resulting possibly in the formation of a deuteron. The energy resolution is at present insufficient to ascertain whether a real deuteron is formed or not. Evidence has appeared for an asymmetry in the direction of the emission of the μ meson in the π-μ decay. This asymmetry is at present statistically significant by three times standard deviation and therefore will bear further investigation. If this asymmetry is real, the results will be very interesting from the point of view of spin and magnetic moment of the meson.

16. Capture of Negative π Mesons in Hydrogen

R. Aamodt, W. K. H. Panofsky and R. Phillips

The resolving power of the experiments on the study of gamma-rays produced by the capture of negative π mesons in hydrogen has been improved. As a result, the conclusions tentatively indicated in the last Quarterly Report have been confirmed. It appears now to be fairly certain that both the neutral meson and a single gamma-ray are emitted in the process and therefore valuable qualitative data concerning the neutral meson mass and some of the meson coupling constants result. Conservatively speaking, the mass difference between the negative π and neutral π meson must lie between 1.3 and 4.7 Mev. It is hoped that this limit will be further narrowed by the use of a multiple channel pair spectrometer, which has just been completed. This spectrometer has a larger aperature, namely, a 3.5 in. gap, than the previous instrument and is being instrumented to recorded electron pairs in 30 channels.

17. Meson Production

C. Richman and H. A. Wilcox

The production of mesons in the forward direction by protons on protons has been studied further. Special attention has been paid to the peak in the meson spectrum. So far, no structure has been seen in this peak. However, the shape of this peak and the cross sections involved are very much better known.

Attempts are being made to count mesons in flight by the use of liquid scintillators.

The existence of a peak of mesons from protons bombarded by protons makes it possible to think about a meson beam. An apparatus is now being designed to produce such a beam. The first experiments to be tried with this beam are the scattering of mesons on carbon and liquid hydrogen. The scattering of mesons on liquid hydrogen may provide information on the character of the wave function of the π meson. Calculations show that one will obtain reasonable yields of scattered mesons in these experiments.

A summary of the work on proton-proton production may be found in UCRL 665, "The Production of π^+ Mesons by Protons on Protons in the Direction of the Beam" by W. F. Cartwright, C. Richman, M. N. Whitehead, and H. A. Wilcox. A second summary report on production of Mesons from lead is UCRL 568, "Production of π^- Mesons in Lead by High Energy Proton Bombardment" by M. Weissbluth.

18. Synchrotron Studies

A. C. Helmholz

The experiments on the synchrotron have been mainly concerned with mesons during the last quarter. They may be divided into those on the production of π^+ mesons, those on the lifetime of the π^+ mesons, and those on the neutral meson.

The first experiments have been carried on by J. Steinberger, A. S. Bishop, and R. Mozley. Mozley has made a series of comparative measurements of the cross section for production of π^+ mesons by the bremstrahlung spectrum of the synchrotron. Previous measurements had been made by Steinberger and reported in the quarterly report. The measurements have been made on H, Li, Bi, B, C, Al, Cu, Sn, and Pb. The cross section per nucleon is a steadily decreasing function of Z. It drops by a factor of 3 from H (Z = 1) to C (Z = 6) and by another factor of 3 from C to Pb (Z = 82). The measurements have been done at 90° to the gamma-ray beam, and at energies of 50 and 70 Mev of the meson.

Steinberger and Bishop have measured the energy distribution of mesons at 90° from H and found a distribution extending to 110 Mev and falling off at the upper end of the curve in the same way as the number of quanta in the beam fall off with energy near the upper end of the photon spectrum. Their measurements also include the yield of mesons as a function of gamma-ray energy. This curve, of course, starts at about 150 Mev and rises steadily up to of the order of 250 Mev and then remains flat up to 330 Mev. Further experiments on the angular and energy distribution from liquid hydrogen are being done.

The other major experiments of the quarter have been written up as reports and will not be reviewed here. However, the results are very significant: the identification of the neutral meson, and the measurements of the half-life for the $\pi^+ \rightarrow \mu^+$ meson decay. Both of these results are of great interest for meson theories. They are given in UCRL 674 and UCRL 700.

Some additional work checking the results reported by C. Levinthal in UCRL 569 has been done by A. Silverman. The experiments by K. Strauch, given in previous quarterly reports, have been essentially finished and will soon be written up as a report. Experiments by Peterson on the yield of mesons from C will also soon be issued as a report.

19. Theoretical Physics

R. Serber

Scattering Experiments. A number of suggestions for explaining p-p scattering have been made by people at the Institute for Advanced Study, whose principal aim was to find forces which maintained charged symmetry. These have been looked into to some extent, but we have not been able to find any improvement over our own conclusions.

Meson Theory. Calculation of meson processes involving deuterons have been carried out. The effects of the strong distortion of the nucleon wave-functions by nuclear forces, and particularly the possibility of deuteron formation in meson production has been investigated, and has been shown to radically alter the expected energy distribution of the produced mesons. The modified spectrum, which is much more concentrated to high energies, is in good agreement with the observations. A systematic survey of the predictions of the various meson theories shows that pseudoscalar theory with pseudovector coupling most nearly accounts for the observed facts. One outstanding discrepancy is the large photo production cross section for neutral mesons.

Other Studies. Investigations are being carried out on various points concerning shower theory such as the lateral spread of air showers. These are of interest both for cosmic ray and synchrotron problems. A study is also being made of the penetration of high energy particles through matter, in the attempt to answer such questions as the fraction of their energy lost in nuclear events rather than in ionization, the number of neutrons made, and similar problems.

II ACCELERATOR OPERATION AND DEVELOPMENT

1. 184-inch Cyclotron

James Vale

Operation. The cyclotron was under steady operation during this past period with a minimum of time taken for maintenance and for development of the machine. This was necessitated by a heavy demand for operation by the experimental program. The cyclotron was in operation for the experimenters an average of 95-1/2 percent of the time during the past three month period. This figure emphasizes the fact that practically no time was available for construction and installation of any new equipment for the machine. A few parts, however, were built or at least started in design.

Roof Plugs. In a conference with the city fire chiefs some time ago, it was suggested that openings in the concrete roof blocks be built through which a fire hose could be inserted. These would provide additional openings into the concrete shielded area in case of fire for the use of special fire fighting equipment such as fog nozzles. These openings would be extremely useful in those cases where entry into the shielded area was difficult.

It was decided that the logical place for these openings was in the plugs in the present roof blocks. Accordingly, new plugs were designed that have an eight inch hole through them. These openings can be plugged if necessary by short sections that can easily be lifted out one at a time.

Adjustable Cave Platform. A remotely controlled table was built for the deflected beam cave. This table has four motions: (1) vertical, (2) vertical tilt, (3) horizontal, (4) horizontal pivot. These motions enable an experimenter to align his equipment with the deflected beam while the beam is on and thus reduce setting-up time. This table, or secondary platform, is supported by four jack screws mounted beneath the main platform and extending above it through four holes in the main platform. This keeps the height of the table to a minimum. The load capacity of the table is four tons.

Heavier loads can be accomodated by lifting the table off the jack screws and running the jack screws down until they are flush with the main platform. This is done, for example, when the seven ton magnet is used in the cave.

2. 60-inch Cyclotron

T. M. Putnam Jr., G. B. Rossi, J. F. Miller, Kenneth Jenkins

Operation. There were 2,179.5 hours available for operation in this quarterly period. This time was used as follows:

Deuterium bombardments	419.6 hrs
Alpha bombardments	1091.4 hrs
Proton bombardments	55.5 hrs
Experimental operation:	
carbon acceleration	36.0 hrs
other activities	32.2 hrs
Total Operation	1634.7 hrs
Outage time	444.8 hrs
Total Available Time	2079.5 hrs
Holidays	56.5 hrs
Total Time	2136.0 hrs

The operation efficiency of time available is thus 78.6 percent.

The larger period used in alpha bombardment compared with other particles is partly due to our choice as well as by request of cyclotron users. We have set apart Saturday and Sunday for deuterium runs to lessen possible radiation received by members of the staff and personnel in neighboring buildings. In general, the surrounding neighborhood is less populated on these days and the staff is at its minimum. The control room itself is adequately shielded for this type of operation although other areas around the machine are inadequately shielded. Two of these areas were further shielded. When the east entrance to the cyclotron was plugged with ordinary concrete, an appreciable difference in neutron background was noted; an exposed area immediately above the cyclotron was filled with M.O. concrete. More shielding is contemplated in the near future.

The major difficulty contributing to outage time was with the deflector. After approximately four months of trouble-free operation with the newly designed r.f. deflector, the system showed a gradual increase in drain across the main support insulator. This eventually lead to a dead short that sustained itself under 110 volts. Examination showed the main support insulator (3-3/4 in. I.D.-8-1/2 in. long, zirconium oxide material) to be coated with a brown deposit. "Hi-potting" this section indicated the drain across this area was not sufficient to have caused the short. The difficulty was found to be in the freedom of the moveable plates of a large parallel plate condenser which forms part of the main suspension arm. During sparking periods these plates set up a vibration and eventually welded to one another. The condition was remedied by ribbing the plates

for rigidity. No further difficulty has been encountered with this installation.

In all ion sources there are produced ions that do not contribute to the external beam. Ideally, one would like to have a pinpoint source of ions of the proper ion state (He - D_2 - H_2) located at a center that would be compatible with tangential approach to the deflector. This source would have to supply sufficient ions during the catching phase of the r.f. cycle to fulfill beam requirements. Our present source has as yet not proved inadequate in its task of supplying ions but it has no ion selective properties nor does it limit the starting centers. It is felt that while maintaining a bombardment schedule, various geometric arrangements of the ion extraction orifice and the cone itself should be tried to effectively shield the arc from voltages that excite useless ions. Hooding the arc on all sides, except that facing the accelerating feelers of the east dee, has considerably lessened the loading of the dee circuits. Varying the orifice dimensions has narrowed considerably the visible ion plasma within the dees and has increased beam intensity as well as eliminated the need for continually adjusting the source to maintain peak performances. An extraction orifice of 1/8 in. x 1 in. has been used for about three months and consistent data taken. Beams as high as 32.5 μa of alpha particles have been obtained when such a cone is intalled. 15 - 20 μa average beams are maintained for from 150 to 250 hours of steady operation. A gradual decrease of beam intensity is then noted which has been found to be due to erosion of the orifice as a result of ion bombardment. When this erosion has run its course, operation is spotty and r.f. loading appears. The orifice height has been varied to 1/2 in. and 1/3 in. and sources run for comparable times. With the 1/8 in. x 1/2 in. opening, no change in beam intensity or cone life was noted but the visible beam plasma within the dees was narrowed proportionately. The width, as well as the height of the opening, was changed to 1/4 in. x 1/3 in. and a comparable run was made. The peak beams were about one-half the values received with the former cones and operations were not as steady. Further changes in the opening are to be made and evaluated.

Heavy Ion Acceleration. The apparatus for measuring the beam of heavy ions accelerated in the 60-inch cyclotron has been rebuilt in order to get quantitative data as a basis for evaluating ion sources and for adjusting the cyclotron for maximum beam.

The external beam, after leaving the target snout, now passes in vacuum through an adjustable slit, down the axis of a 26 inch tube, through a second slit adjustable in width and in horizontal position, then through a foil wheel where various absorbers may be placed in its path. It then traverses a chamber where nuclear emulsions may be exposed and enters the beam measuring apparatus. The latter consists of two ionization chambers, with foil windows, and a Faraday cup between them, the entire assembly being in an evacuated chamber. The purpose of this design is to count the heavy ions in the beam and to measure their beam current with an electrometer at the same time. This must be done in the presence of the alpha beam from residual helium in the tank, since alpha resonance and carbon ion resonance overlap. The carbon ions may be counted in the presence of a moderate number of alphas by using a pulse height discriminator on the pulses from the ionization chamber. Near alpha resonance, the alpha pulses pile up and the discriminator can no longer separate them from heavy ions. One may however hope to cancel out the alpha pulses, either electrically or electronically.

Electronically, cancellation may be obtained by using two ionization chambers with the alpha beam passing through both but the carbon beam stopped in the Faraday cup between them; a mixer circuit set for anti-coincidence will then count the carbon ions and if it is set for coincidence will count alphas. An objection to the system is the amount of electronic apparatus needed. Electrical cancellation of the pulses has been used by several experimenters, and was selected as the first scheme to be tried here because of its simplicity. It depends on the collection of the combined pulse from two ionization chambers, with the high voltage plate negative in one, positive in the other. The collector plate may be a common plate for the two chambers or separate plates connected electrically. The pulse from a particle traversing both chambers should cancel exactly, except for the difference in ionization intensity, while the pulse from a particle traversing only one chamber will not be diminished. One must avoid creating any ions near the edge of the plates in the ionization chamber, since it is impossible to cancel the pulses induced by ions so located. (See Rossi and Staub: Ionization Chambers and Counters.) Therefore, the beam must pass through perpendicular to the plates of the ionization chambers and far from the edges. Each chamber has 1.4 mil dural outer windows to hold the gas at atmospheric pressure. Next inside are symmetric high voltage plates of .35 mil aluminum with a foil half-way between them for collecting the pulse. Cancellation of the alpha beam was not appreciable when the pulses from the two ionization chambers were mixed. By using only one chamber and making one of its high voltage plates positive, the other negative, and increasing the thickness of the collector plate to 1.1 mils so that, with appropriate absorbers from the foil wheel the carbon beam could be accurately stopped in the collector plate, good cancellation was obtained except where the alphas were most dense.

The electronic apparatus previously used was replaced by standard apparatus from the Counter Group of the Radiation Laboratory. This includes a preamplifier, situated near the ionization chamber, which transmits the signal to a linear amplifier. The orientation of the tubes in the preamplifier was found to be such that the direction of electron flow was not in the same plane for all tubes so that the tubes could not be lined up along the field lines of the cyclotron magnet. As an alternative to rewiring, the preamplifier was moved about five feet away from the ionization chamber. It functions satisfactorily there. Isolated output stages of the linear amplifier send one signal to an oscilloscope at the cyclotron control desk and another through the discriminator to a scale-of-64 Richardson scaller with a mechanical counter and a counting rate meter which takes every 32nd pulse. This arrangement permits a counting rate up to 50,000 per second which corresponds to a beam current of 5×10^{-14} amperes of carbon ions. With a sensitive electrometer the counting and current measuring ranges should overlap considerably. An electrometer, with a voltage regulator, has been designed and built by Leland K. Neher and Kenneth Jenkins but is not yet in service.

Experimental runs on the cyclotron with standard ion sources have yielded 20,000 carbon ions per second through a slit .15 inches wide. This should represent about 0.1 of the actual external beam. Oscillator power was 93 kw. The range of the carbon ions is close to 53.5 mg/cm^2 aluminum. The carbon beam increases rapidly with oscillator power and with the voltage and power put into the arc. However, it was found that a small beam of carbon ions could be obtained without an arc being struck, although it was necessary to have the ion source

filament emitting electrons and a small arc voltage applied. This indicates that the final stripping of electrons from the carbon ions may occur in the r.f. field between the dees. This may account for the broad resonance curve for carbon ions, which extends from 287 to 292 amperes magnet current, as compared to a spread of about 1-1/2 amperes for the residual alpha beam. Thus, carbon ions appear both above and below alphas, but mostly below, as expected.

Probe Current Meter. The probe current is computed by measuring the rise in temperature of the probe cooling water. Knowing the energy of the beam and the power to raise the water a fixed amount, the beam current for any rise in temperature is readily calculated. The rise in water temperature is obtained by means of a thermopile between the input and output of the water circuit. The thermopile is calibrated by an electrical resistance heater placed in the probe cooling water circuit. When calibrating, the square of the heating current will be proportional to the beam current. Thus, the system is calibrated such that each millivolt read on the thermocouple will be equivalent to some fixed number of microamperes.

A millivolt amplifier was built to amplify the output of the thermocouple, with the output of the amplifier converted to microamperes and fed into the regular beam integrating equipment. The system is simply calibrated by turning on the heater and measuring the current through the heater. The number of microamperes represented by the heating power is then calculated and the gain of the amplifier is adjusted until the beam meter reads this calculated current. Thus, the probe current is read and integrated on the regular beam metering equipment. The system still has the disadvantage of very slow operation due to the slow thermal lag inherent in this type of measurement.

R. F. Deflector. During the overhaul last fall the deflector system was changed from the conventional d.c. type to a form of r.f. In order to obtain higher deflected beams, it seemed desirable to increase the width of the deflector channel. However, since a higher applied d.c. voltage would then be required to maintain the deflecting gradient and the system was already being operated near its maximum voltage (higher voltages resulting in considerable sparking), the possible use of the r.f. dee voltage was considered. An experimental unit, with the deflector external to the dee, was tested and worked so well that the new dees were designed with this type of deflector. The test unit is shown in Fig. 2. The U house wall was removed and the deflector inserted from the side. The d.c. deflector support is shown at the top of the figure.

Briefly, the difference between the two units is that the straight d.c. deflector was housed within the dee (in what we call the U house) and was in a field free region with respect to the r.f. voltage. The so-called r.f. deflector is completely external to the dee and the potential between the deflector and the beam (or dee) varies with the r.f. cycle. With the d.c. type, the applied negative d.c. potential supplies the deflecting field while, with the r.f. type, it is the dee to ground potential that supplies the deflecting field.

The successful operation of the r.f. type of deflector is paradoxically dependent on one of the main limiting factors of the GW cyclotron, i.e., the phase lag of the ions behind the applied accelerating voltage. Measurements made by L. K. Neher on the 60-inch showed the ions to be approximately 60 degrees

behind the phase when they cross the last accelerating gap. The exit septum is about 90 degrees around from the gap between the dees, and the deflector is about 60 degrees in length. Referring to Fig. 1, we see that the voltage is quite favorable for deflection of the ions, since they enter the deflector channel at point C and leave at point D on the voltage curve. Since point C is approximately 60 degrees from B, the deflecting voltage, equivalent to the applied d.c. voltages used during previous operation, will be greater than 85 percent of the peak r.f. dee to ground voltage. Since the dee voltage is in the range of 100-120 kv, the effective deflector voltage will be in the range of 85-100 kv. Former operating voltages were in the range of 70-85 kv so that a slight increase in width of the deflector channel would be possible from these considerations alone. With regard to flexible operation, another point had to be considered. Certain targets will not stand the full beam so that operation at lower dee voltages occurs quite frequently. In order to bring the beam out on the target, it would be necessary to maintain the deflecting field by supplying the difference in effective potential on the deflector from some other source. This may be achieved by grounding the deflector to r.f. through a bypass capacitance and applying some negative d.c. voltage. The deflecting field may also be maintained by moving the deflector in closer to the dee wall but this adjustment changes the tuning of the dee system and is not desirable.

The deflector system that is now in use, as drawn in Fig. 3, consists of an external deflector grounded to r.f. through a bypass condenser with a moderate negative voltage applied and adjusted to maximize the beam on the target. The condenser is built into the tank as close as possible to the deflector and operates at tank vacuum. This design was used in order to reduce breakdown problems and to reduce the inductance of the deflector support structure to avoid a resonance between it and the bypass condenser. The deflector to dee capacity is of the order of 25 uuf and the bypass condenser has a capacitance of the order of 500 uuf. The d.c. line has a series resistance of 15-20 megohms so that virtually no r.f. gets back to the power supply.

The operation of the r.f. deflector during the past 6 months has been very smooth. The only real difficulty encountered was vibration of the condenser plates during periods of sparking resulting in a short from deflector to ground. This was fixed by suitable reinforcing and has not occurred since.

Operating characteristics are as follows:

deflector to dee spacing	3/8 in. - 1/2 in. at exit septum 1/2 in. - 3/4 in. at end of deflector
applied d. c. voltage	25 - 35 kv
drain current	0.4 - 0.6 ma

External beams:

30 μa - alpha particles
40 μa - deuterons

Beams have been obtained with no d.c. applied with the deflector moved in closer to the dee. These were of the order of 2 μa alphas and on the test

model 15 - 20 μa deuterons. The position of the deflector and dee voltages available in these two cases were different and no attempt has been made to adjust the machine to operate without d. c. voltage on the deflector.

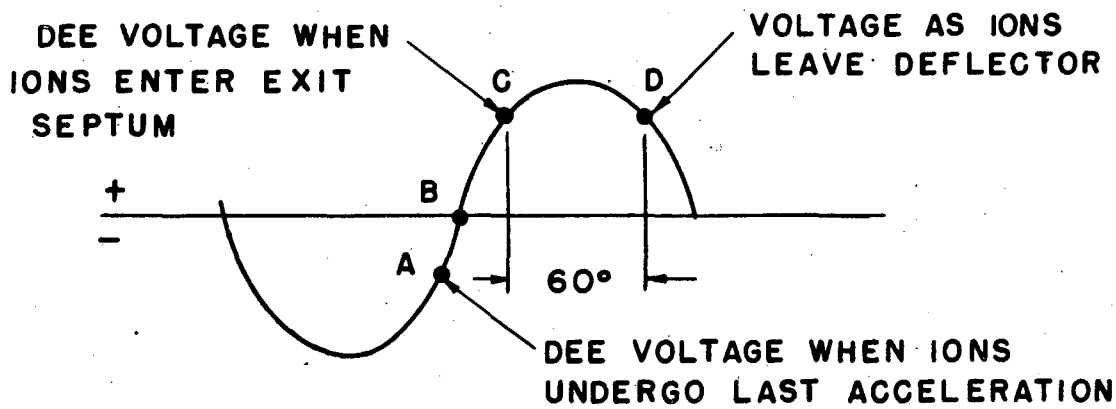

MU 395

VOLTAGE ON EXIT DEE

Fig. 1

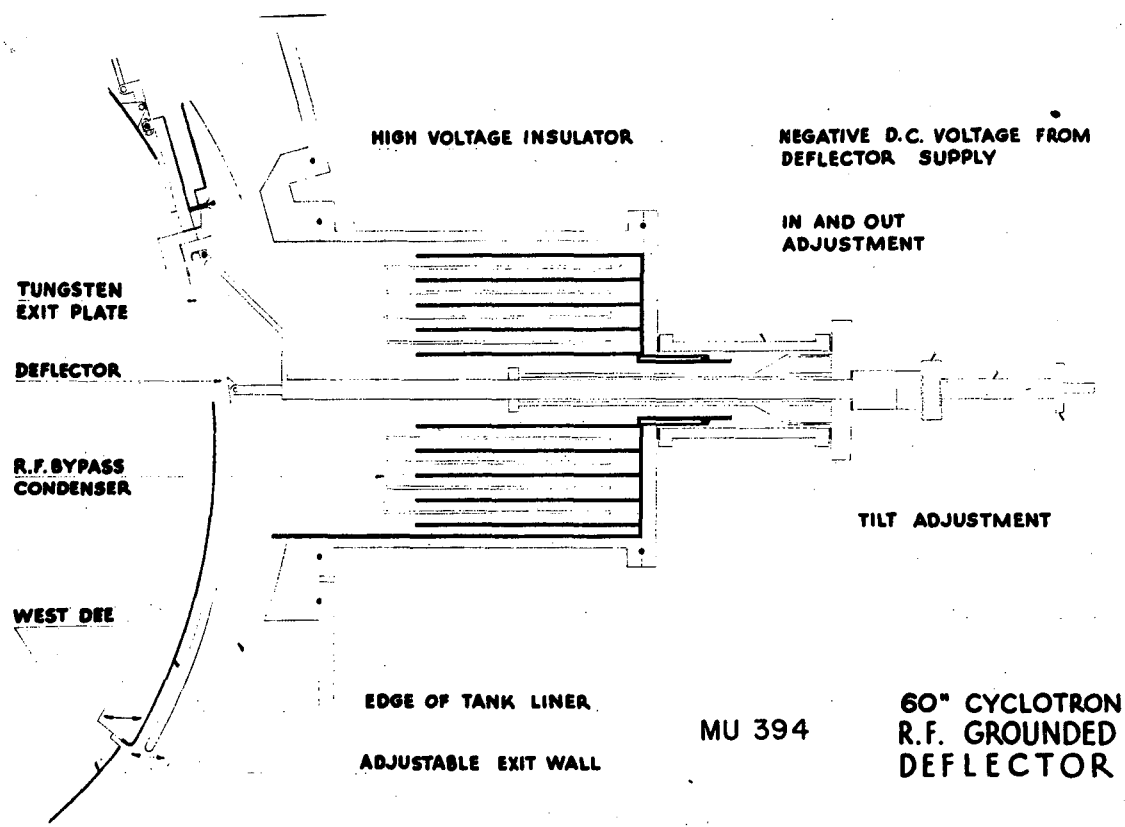
HIGH VOLTAGE INSULATOR
NEGATIVE D.C. VOLTAGE FROM DEFLECTOR SUPPLY
IN AND OUT ADJUSTMENT
TUNGSTEN EXIT PLATE
DEFLECTOR
R.F. BYPASS CONDENSER
TILT ADJUSTMENT
WEST DEE
EDGE OF TANK LINER
ADJUSTABLE EXIT WALL
MU 394
60" CYCLOTRON R.F. GROUNDED DEFLECTOR

Fig. 2

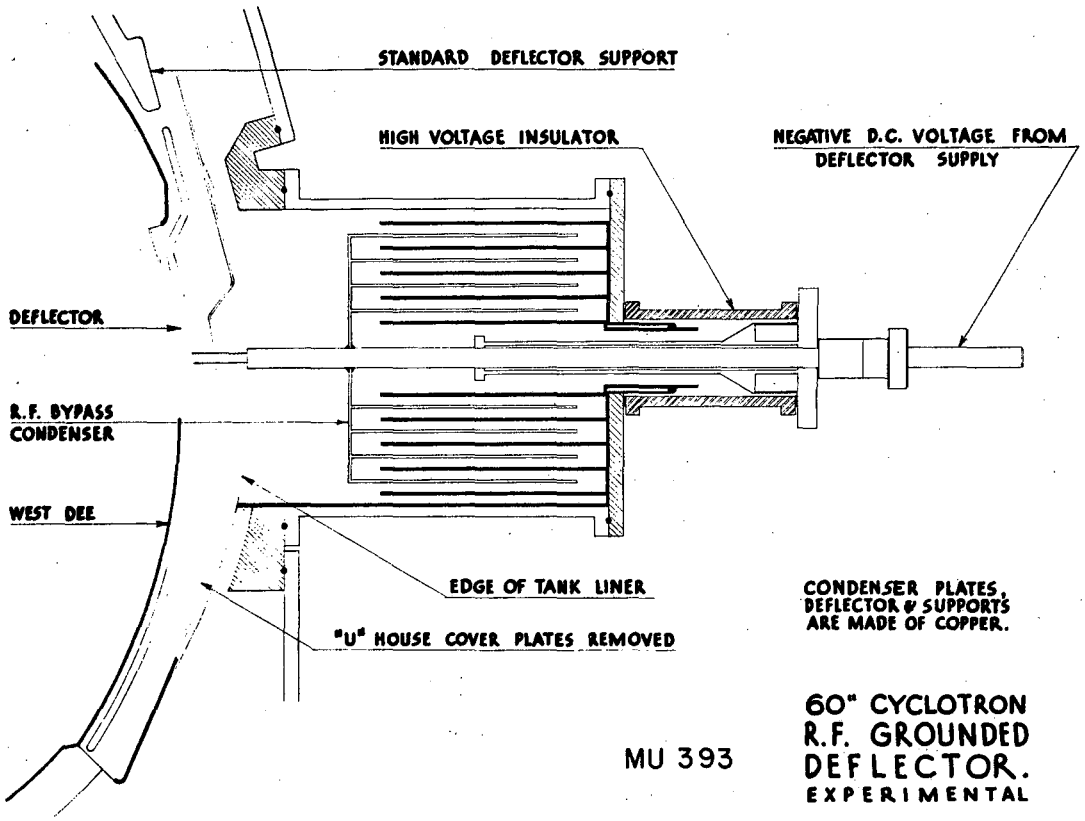
STANDARD DEFLECTOR SUPPORT
HIGH VOLTAGE INSULATOR
NEGATIVE D.C. VOLTAGE FROM DEFLECTOR SUPPLY
DEFLECTOR
R.F. BYPASS CONDENSER
WEST DEE
EDGE OF TANK LINER
"U" HOUSE COVER PLATES REMOVED
CONDENSER PLATES, DEFLECTOR & SUPPORTS ARE MADE OF COPPER.
MU 393
60" CYCLOTRON
R.F. GROUNDED
DEFLECTOR.
EXPERIMENTAL

Fig. 3

3. Synchrotron

George C. McFarland

The synchrotron has been successfully operated during the report period. In general, an extension and continuation of the previously reported experimental program has been employed in using the machine time.

A peak intensity greater than 9000 R/hr at 1 meter was recorded during the month of April. A noticeable trend toward steadier and more consistent operation at usable intensity levels is evident. This trend has been interrupted on two occasions by erratic behavior and rapidly changing machine requirements for maintaining the beam intensity level. This phenomenon is not fully understood and has been variously attributed to changing injector filament characteristics or geometry, and to an occasional lack of effectiveness of the octant contractor. Difficulty in determining the role of the injector in this erratic behavior lies in the inability of the investigators to make a close and detailed inspection of the injector filament at operating temperatures while in the machine. Every effort is being made to find the cause of the above mentioned erratic behavior.

Further progress has been made in the field plotting, using the eight peaking strip monitors. These monitors are disposed circumferentially at 45° intervals and placed so as to be sensitive to field strength in the gap. This monitoring system makes possible the comparison of the relative times of arrival of a specific field strength at each of the eight monitoring stations. The specific field monitored is that at or near the injection field strength, as that field is most critical due to initial beam instability. One direct consequence of this monitoring system has been the reduction from the original sixteen octant field adjusting coils to only eight. This has greatly simplified adjustment of the field pattern in peaking the beam intensity. As was noted in the last report this monitoring system has made it possible to restore the field pattern after failure of one of the adjusting loops. Also guided by this monitoring system, the whole level of current flowing in the adjusting loops was appreciably lowered, lessening the strain on some of the components.

Development has continued on the radiofrequency voltage modulator. This device is scheduled for dynamic test with the machine during May. As mentioned in the last report, this modulator will allow the beam duration to be extended from the normal 10 microsecond duration per pulse continuously to a duration of 3 milliseconds. This will be a distinct advantage to experimenters using crystal scintillation counting equipment. It will enable counting circuits employing coincidences, anti-coincidences and delayed coincidences to recover and register several counts per pulse. It will also appreciably cut down the background counting due to accidentals. As previously reported, this modulator will extend the beam duration and will cause this long duration beam to be symmetrically disposed before and after peak field time.

Twice during the report period the upper yoke of the magnet has been raised, exposing the top of the upper pole tips. This was necessary due to motion of a few of the forty segments that make up the upper pole tip. The

second time this job was done, a considerable increase over the designed volume of rubber was inserted between the top of the upper pole tips and the bearing surface of the upper yoke assembly. This has distributed the load on the upper pole tip segments evenly, and has resulted in a noticeable decrease in noise level when the machine is running. Each of the above repair attempts have taken less than two eight hour shifts for completion and regaining of the beam.

4. Linear Accelerator and Van de Graaff Machines

W. K. H. Panofsky

During February, the tank was sandblasted and glyptaled and a new selector switch was installed in the high voltage end. This process cut down the bake-in time to as low as 35 minutes as compared with the previous 8 hours required. Lead shielding on the Van de Graaff tank cut down the dosage to approximate tolerance. A new type insulator for the focus electrode was installed, which decreased break down in this particular insulator.

During this time it was found that the selection of V drive belts in the upper end was very important from the standpoint of reducing leakage through the V belts. Also in this quarter, a new method of baking out the trapping charcoal used in the high voltage end of the column was developed, which saves up to 5 hours in charcoal bake-in time. This process also decreased the column voltage bake-in after opening the column to air from around two days to 5 hours. The out-gassing heaters for the charcoal traps were converted to Calrod heaters with 1500 watts heat dissipation as compared with 100 watt heaters that were used previously, so that the procedure used now upon letting the column down to air consists of immediately placing the charcoal trap in an auxiliary vacuum system and heating it up to about 500°C while work is being done on the column. When the trap is ready to be installed in the column it is taken out of the auxiliary vacuum system while still at 500°C and immediately put in place. While the column is being pumped down a "keeper" current causes the charcoal trap to stay at about 400°C. In this manner the charcoal is not allowed to pick up any gases during the transfer from the auxiliary vacuum system to the column vacuum system. This new method of charcoal bake-in using a higher temperature has succeeded in improving the operating efficiency considerably.

Ice is used now only on very warm days and when column bake-in is in process.

Operating Percentages

Running time	69.2 percent
Repair	18.3 percent
Bake-in, install	12.5 percent

5. Bevatron Development

W. M. Brobeck

Steel erection for the bevatron building started February 10. By the end of April steel erection was complete, most of the roof was covered, the magnet room cranes were erected and excavation for the magnet foundation was going on. The building completion date is now August 1.

During the period the quantity of steel for the magnet frame delivered to the fabricator's shop increased from 38 to 75 percent of the total. Assembly of plates into "slabs" started in March and by the end of April about 25 percent of the leg slabs and 10 percent of the yoke slabs were finished. Erection of magnet steel in the building will start on July 1.

The fire which destroyed the building housing the mechanical design section also destroyed drawings of the magnet coil which will take about one month to replace. This may cause some delay in starting coil winding which was previously scheduled for August 15.

The injector ion gun was tested during the period and produced a well focussed beam of 1/2 milliamp of 500 kv protons. Operation of the radio frequency Cockroft-Walton type high voltage supply was satisfactory. Further testing of the ion gun has been deferred due to interference by other work. Some drawings of the 10 Mev injector linear accelerator were destroyed in the fire and are being replaced. Many of the parts were, however, in the shop before the fire.

Definite plans for the accelerating system and frequency control have been decided on and design of the units required is proceeding as time is available.