OFFICIAL USE ONLY

UCRL 8072

for CEJ

UNCLASSIFIED

# UNIVERSITY OF CALIFORNIA

# Radiation Laboratory

TWO-WEEK LOAN COPY

*This is a Library Circulating Copy which may be borrowed for two weeks. For a personal retention copy, call Tech. Info. Division, Ext. 5545*

BERKELEY, CALIFORNIA

UNCLASSIFIED

OFFICIAL USE ONLY

## DISCLAIMER

This document was prepared as an account of work sponsored by the United States Government. While this document is believed to contain correct information, neither the United States Government nor any agency thereof, nor the Regents of the University of California, nor any of their employees, makes any warranty, express or implied, or assumes any legal responsibility for the accuracy, completeness, or usefulness of any information, apparatus, product, or process disclosed, or represents that its use would not infringe privately owned rights. Reference herein to any specific commercial product, process, or service by its trade name, trademark, manufacturer, or otherwise, does not necessarily constitute or imply its endorsement, recommendation, or favoring by the United States Government or any agency thereof, or the Regents of the University of California. The views and opinions of authors expressed herein do not necessarily state or reflect those of the United States Government or any agency thereof or the Regents of the University of California.

OFFICIAL USE ONLY

UNCLASSIFIED

# BETA RADIOACTIVITY AND ENERGY LEVELS OF HEAVY NUCLEI: DECAY SCHEMES OF $Np^{239}$, $U^{237}$ AND $Np^{238}$

J. M. Hollander, J. O. Rasmussen and R. G. Albridge, Jr.*
W. G. Smith†

## THE RADIATIONS OF $Np^{238}$, $Np^{239}$ AND $U^{237}$

Radioactivity studies in the heavy element region have shed important light on fundamental questions of nuclear structure. Nuclei in the region beyond thorium appear to have stabilized spheroidal shapes and thus exhibit many of the properties predicted by the Bohr-Mottelson model.[1] The nuclei chosen for discussion here, $Np^{238}$, $Np^{239}$, and $U^{237}$, have been studied intensively in Berkeley and elsewhere, and they serve to illustrate many features of the application of theory to nuclei of this region. There is an additional practical interest attached to $Np^{239}$ and $U^{237}$ in that they are major products of fast neutron irradiation of $U^{238}$. Thermal neutron irradiation also yields $Np^{239}$. Thus, knowledge of the decay characteristics of these isotopes also has bearing on shielding and radiolysis problems connected with reactors and fuel element reprocessing. For convenient reference we reproduce here the decay information on $Np^{238}$, $Np^{239}$, and $U^{237}$ from the new Table of Isotopes.[2]

Let us turn to consideration of the interrelation of advances in nuclear structure theory and the experimental results of intensive spectroscopic study of radioactive decay of heavy isotopes, such as, the three considered in this paper.

## THE FAMILY OF NUCLEAR SHELL MODELS

Compared with present knowledge of the structure of atoms, our understanding of the way protons and neutrons assemble themselves into complex nuclei is still very limited. But the last few years have seen much progress in the fields of radioactivity and nuclear structure, from experiment and from theory, and from the interaction between experiment and theory. One area of investigation where this interaction has been especially strong has been that of nuclear

*Department of Chemistry, University of California Radiation Laboratory, Berkeley, California.

†Physics Department, Indiana University, Bloomington, Indiana.

UNCLASSIFIED

OFFICIAL USE ONLY

OFFICIAL USE ONLY UNCLASSIFIED

spectroscopy, and in particular the nuclear spectroscopy of the heaviest elements. Here it has been possible to correlate many observed nuclear properties with predictions based upon the unified nuclear model of A. Bohr and B. R. Mottelson[1] and upon its extensions. The general success of these correlations has firmly established the essential validity of this theory.

It is the purpose of this paper to describe some recent studies of the beta and gamma radioactivity of $Np^{239}$, $U^{237}$, and $Np^{238}$, and to review the information derived from these studies. These isotopes were produced by intensive neutron irradiations in the Materials Testing Reactor at Arco, Idaho. In the experimental work, high-resolution magnetic electron spectrographs and scintillation gamma-ray spectrometers were used. The electron spectrographs are of high stability and accuracy, employing permanent magnets as a field source and using photographic detection of the electron lines. In order to obtain sufficiently high resolution for the analysis of the complex spectra encountered, techniques of electroplating essentially mass-free samples upon fine wires have been developed.[3]

In the discussion which follows, we shall not dwell upon experimental methods nor even upon the analysis of the data but, neglecting the former and assuming the correctness of the latter, we shall try to show how the large amount of experimental information about these nuclei can be interpreted and understood within the framework of the Bohr-Mottelson and related nuclear models. First, several basic general facts about nuclei should be stated:

1. Nuclei possess a definite shell structure, although its effects do not seem to be quantitatively as pronounced as in atoms.
2. To a first approximation, nucleons (protons or neutrons) outside closed shells behave independently of each other, although the force field in which they move is generated collectively by all the nucleons. Much success has been achieved by theoretical descriptions of odd-mass nuclei which correlate nuclear properties in terms of the behavior of the last, or odd, particle.[4]
3. The resistance of nuclei against shape deformation varies in a regular fashion as a function of their position in the nuclear "periodic system" and these shape changes are accompanied by marked changes in the nuclear properties. In regions near the closed shells, the nuclei favor a spherical equilibrium shape, but in regions remote from shells the equilibrium shape is spheroidal.
4. The non-spherical nuclear "core" which exists in the even-even (even mass, even atomic number) nuclei of lanthanide and actinide elements gives rise to rotational excitations which are characteristic of spheroidal systems and which are similar to the rotational bands found in the spectra of diatomic molecules.
5. In odd-mass nuclei of the rare-earth and actinide elements there are also excitations of the odd particle, as in all odd-A nuclei, in addition to the collective excitations of the spheroidal core. Thus one observes in such nuclei the various particle excitations with rotational bands superimposed upon each particle level. In molecules the same situation exists except that the "particle" levels are electronic excitations rather than excitations of protons or neutrons.

UNCLASSIFIED



OFFICIAL USE ONLY

Two categories within the Bohr-Mottelson model will be distinguished. First, there are the predictions of a general nature, those which depend only upon the collective nature of the nuclear excitations. Then there are the more detailed correlations which demand a knowledge of the actual state of intrinsic motion of the odd-particle in the deformed nuclear system.

## GENERAL PROPERTIES OF DEFORMED NUCLEI

Some general consequences of the Bohr-Mottelson theory for deformed nuclei are the following: (1) existence of rotational band groupings of states in nuclei, (2) behavior of certain relative gamma ray intensities in accordance with simple vector projection relations depending only on initial and final spins, multipolarity, and projections of spin on the nuclear symmetry axis, designated by the quantum number K.[5]

Every intrinsic state of nuclear excitation, in a spheroidally deformed nucleus, has associated with it a band of rotational energy levels. The nuclear angular momenta of these states in general follow the sequence $I_o$, $I_o+1$, $I_o+2$.... where $I_o$ is the angular momentum of the ground state; an exception to this rule is found in the cases of the ground state bands of an even-even nuclei or other bands with $I_o = 0$, for which the odd-spin states are missing. The energies of these rotational states [illegible] are predicted by the model to follow the equation:

$$E_I = \frac{\hbar^2}{2\mathfrak{J}} \left[I(I+1) + \delta_{K,1/2}\, a(-1)^{I+1/2} (I+1/2)\right]$$

where $\delta_{K,1/2} = 1$ for rotational bands whose fundamental level has $I = 1/2$,

$\delta_{K,1/2} = 0$ for all other bands,

$I$ = spin of level,

$\mathfrak{J}$ = nuclear moment of inertia,

$a$ = parameter dependent on details of odd nucleon wave function (called "decoupling parameter").

In the even-even nuclei, it is expected that nuclear excitations of a vibrational character will be found, at energies of about 1 Mev, in addition to the rotational levels near the ground state. Two types of vibrational motion are discussed: (1) that in which the cylindrical shape symmetry is preserved, and (2) that in which it is destroyed. Superimposed upon each vibrational state will be a rotational band.

The experimental data on the energies and spins (angular momenta) of these nuclei can be understood fully in terms of the foregoing simple considerations. In the discussion which follows, the reader is referred to Figures 1a, 1b and 1c.

<u>$Np^{238}$ decay</u>. Figure 1a shows the even-parity levels of $Pu^{238}$ which arise from the beta-decay of $Np^{238}$ and from the alpha-decay of $Cm^{242}$.[6-8] These levels can be interpreted in terms of but three intrinsic states of excitation,

i.e. the ground state and two vibrational states. (In the Bohr-Mottelson theory, each intrinsic state of a nucleus is characterized by a single value of the new quantum number designated K; this actually refers to the component of the total nuclear angular momentum upon the nuclear symmetry axis. In states of even-even nuclei with two-fold rotational symmetry, K = 0, and in general the value of K is equal to the spin of the lowest member of a rotational band. The energy ratios of the first four excited states of the ground state rotational band may be compared with those expected from the I(I+1) dependence; ratios are taken instead of absolute values so as to cancel out the moment of inertia parameter, $\beta$, the value of which is not defined by the general features of the theory. The ratio E(4+)/E(2+) is found experimentally to be 3.31; the theoretical ratio is 3.33. The experimental ratio E(6+)/E(2+) of 6.88 also agrees well with the theoretical ratio, which is 7.00. The energy of the 8+ state is not precisely known, but the ratio E(8+)/E(2+) = 11.7 is not far from the expected value 12.0. Actually, the observed deviations are all in the same direction and can be explained by the inclusion in equation (1) of a subtractive term in $I^2(I+1)^2$ with a fractional coefficient of only 0.1%.

<u>$Np^{239}$ decay</u>. The energy levels of $Pu^{239}$ which arise from the beta decay of $Np^{239}$, from the electron-capture decay of $Am^{239}$, and from the alpha decay of $Cm^{243}$ are shown in Figure 1b; fourteen energy levels are known experimentally.[9-12] The arrangement of the levels in Figure 1b shows how a great reduction in the apparent complexity of the system is attained by the interpretation of the data in terms of four intrinsic levels of excitation of the odd (145th) neutron in $Pu^{239}$. These states are shown as heavy lines in the figure; the other levels are the characteristic rotational excitations associated with the intrinsic neutron levels and superimposed upon each of them.

The spin of the ground state of $Pu^{239}$ is known to be 1/2, hence in the application of equation (1) to the ground state band the term $\delta$ is non-zero. Since the value of <u>a</u> is not given by the simple theory, one uses the energy values of the first three states to determine the constants <u>a</u> and $\hbar^2/2\mathfrak{J}$, with which the equation can then be used to predict the energies of higher states in the band. In this way the energies of the upper three states in the ground-state rotational band are calculated to be 75.6, 165.0, and 193.7 kev, in reasonably good agreement with the experimental values 75.8, 163.7, and 193.1 kev for these states.

Four rotational states are associated with the intrinsic states of spin and parity 5/2+, and three states are found in a 7/2 band of opposite parity. Rotational states have not been observed above the 7/2+ state at 512 kev, but population of such states in significant amounts is unlikely because so little energy is available for the beta decay processes involved.

<u>$U^{237}$ decay</u>. The energy levels of $Np^{237}$ are populated by the beta decay of $U^{237}$, the electron capture decay of $Pu^{237}$, and by the alpha decay of $Am^{241}$.[13-15] The known $Np^{237}$ levels are summarized in Figure 1c, and are grouped into four intrinsic proton (93rd) excitations. The energy ratios for the first two bands are, here again, in good agreement with those calculated from the theory. Such a check cannot be made with the upper band that has K = 1/2 because the knowledge of two excited levels allows only the fixing of the two parameters in equation (1).

As illustrated by the level diagrams of $Pu^{239}$ and $Np^{237}$, it is considered that all levels of a given rotational band belong to a single state of intrinsic excitation of the odd proton or neutron; the only differences among these levels are the energies and angular momenta associated with the collective rotational motion. Hence it follows that for any properties which are associated only with states within a rotational band the intrinsic factors, dependent upon the details of the nuclear structure, are identical; and hence cancel in a comparison of the properties. This was shown already in the discussions of the energy level ratios of rotational states, where the theoretical ratios involved only the energies and angular momenta of the states. Another correlation of this general type is a comparison of the relative intensities (transition probabilities) of gamma rays which originate from one level and terminate at the several states of a rotational band. (Comparison must be made of gamma rays of the same type, or multipole order). Here the intrinsic transition rates are identical, and observable differences in intensities should result only from the different energies of the gamma rays and from the different angular momenta involved; both are independent effects and are easily corrected for. It is thus necessary to know only the spins and K values of initial and final states and the radiation multipolarity to predict relative intensities of the transitions. If the K values are not known from other evidence, they may often be assigned by such relative intensity comparisons. This "branching-ratio rule" of the Bohr-Mottelson theory[5] has been a great aid in the interpretation and understanding of the behavior of nuclear levels in the heavy-element region. It should be emphasized that this rule follows exactly from the complete separation of rotational from intrinsic motion as stated above, and that experimental observation of deviations from the rule will serve to indicate the extent to which the rotational states of a given intrinsic state of motion are not independent of other modes of motion but interact with them.

The experimental data of $Np^{238}$ decay provide some interesting checks on the branching-ratio rule. These are illustrated in Figure 2a. The assignment of K=2 to the band based at 1030 kev is not proved but is strongly suggested by the pattern of observed gamma ray intensities. The following quantitative checks are made: The theoretical value of the ratio of intrinsic (corrected for energy, etc.) rates of the 986 and 1030 kev gamma rays is 1.43 and the experimental value is ~1.4, in good agreement. The 885 kev gamma ray is predicted by theory to be very weak and this is found to be the case, although the experimental ratio I(885)/I(1030) = 0.19 is larger than the theoretical ratio 0.07. (The experimental errors are large in the intensity measurements of very weak gamma rays). A third case is the ratio of the 1027 to 925 kev transition intensities. The comparison, in only fair agreement, is: I(1027)/I(925), experimental 1.1, theoretical 2.5. The major success of the branching ratio rules here is the correlation of the very weak intensity of the 885 kev gamma ray, a fact which could not have been explained on the basis of older gamma-ray selection rules based only upon spin differences. However, the lack of quantitative agreement in the intensity ratios indicates that the upper state is not "pure" with respect to the K quantum number, so that the assumptions upon which the rule is founded may not be completely satisfied.

There is also some branching-ratio information from $Np^{239}$ decay, from the gamma transitions shown in Figure 2b. In this case there is no ambiguity about the spin values of the levels shown in the figure. A comparison is first made with the 49.4 and 57.3 kev transitions which are both within the ground state

rotational band. The theoretical ratio (of the corrected electric quadrupole components) of these transitions is I(57.3)/I(49.4) = 3.5, and the experimental ratio is 3.2. Also, the theory predicts that the intrinsic intensity ratio I(67.8)/I(18.4) should be ~10; the 18.4 kev transition has not been found experimentally but its absence (or weakness) is consistent with the predicted intensity.

Several pairs of gamma-rays may be compared in the $Np^{237}$ levels (from $U^{237}$ and $Am^{241}$ decay). These are shown in Figure 2c. The agreement with theory in all three cases is quite poor, and in the cases of the two high energy transitions there is at least a factor of ten discrepancy. The key to understanding the lack of agreement lies in the recognition that these cases all involve transitions much retarded from single particle rates. This disagreement is interpreted within the framework of the Bohr-Mottelson theory as indication that those components of initial or final wave functions actually contributing to the transition matrix element differ in K from the main components of the wave function. In general, the disagreement is found most often in abnormally retarded transitions; those transitions proceeding at nearly the single particle rate generally show good agreement with the branching ratio rules.

## SPECIAL PROPERTIES DEPENDENT ON THE ODD NUCLEON ORBITAL

We now proceed to a discussion of the properties which depend on more detailed considerations of the spheroidal model for odd mass nuclei. These considerations involve association of each rotational band with a particular orbital in a spheroidal well for the odd nucleon. (The possible influence of collective vibrational degrees of freedom on the interpretation of states of odd-A nuclei will not be considered here.)

The properties we shall now consider are as follows: (1) magnetic moments, (2) rotational band spacings, (3) absolute beta transition rates, (4) absolute gamma transition rates, and (5) conversion coefficient anomalies. The theoretical systematization of all these properties may be attacked in either of two ways. First, one may attempt to calculate the property numerically using published eigenfunctions, such as those of Nilsson,[16] Rassey,[17] or others. Second, one may simply attempt to characterize the eigenfunctions with a set of auxiliary quantum numbers and discuss properties appropriate to limiting eigenfunctions for which the auxiliary (or "asymptotic") quantum numbers designate constants of the motion. A widely used set of auxiliary quantum numbers are N, $n_z$, $\Lambda$, and $\Sigma$. N is the principal quantum number (total number of nodes in the wave function); $n_z$ is the number of planar nodes perpendicular to the nuclear symmetry axis; $\Lambda$ is the projection of orbital angular momentum on the symmetry axis; and $\Sigma$ is the projection of intrinsic spin on the symmetry axis. A set of these asymptotic quantum numbers defines as limiting eigenfunction an anisotropic harmonic oscillator function whose nodal surfaces are coordinate surfaces of a cylindrical coordinate system.

## Magnetic Moments

The theoretical calculation[18,19] of nuclear magnetic moments using Nilsson's wave functions[16] has generally met with semi-quantitative success. Such calculations are usually good enough to aid in deciding which of possible competing orbital assignments is correct. Figures 3a and 3b show such theoretical calculations[19] as a function of deformation. Experimental limits of error on magnetic moments of the heavy region are large, making detailed interpretations of deviations from theory impractical at the present time. One concludes that magnetic moments are a property too sensitive to fine details of the nuclear wave function to be calculable without consideration of configuration mixing.

## Rotational Band Spacings

For bands with spin projection quantum number K equal to 1/2 the level spacings may exhibit irregularities as introduced by the second term of equation (1). The decoupling parameter a is calculable from the odd-nucleon wave function in a manner closely related to the calculation of the magnetic moment.[18,19]

The empirical decoupling parameter value of a = -0.58 for the ground band of $Pu^{239}$ agrees fairly well with theoretical calculations[19] using Nilsson's eigenfunctions for the K = 1/2 even parity neutron orbital labeled with quantum numbers [N, $n_z$, Λ] of [6, 3, 1]. Figure 4 shows these calculations.

The empirical decoupling parameter a = +1.08 for the band at 332 kev in $Np^{237}$ is in satisfactory agreement with theoretical calculations for the 1/2+ [4, 0, 0] orbital.

For all bands one can compare the effective moments of inertia, $\mathfrak{J}$. The bands in odd A nuclei always show greater effective $\mathfrak{J}$ than those in neighboring even-even nuclei. Different bands in the same odd-A nucleus may exhibit quite different $\mathfrak{J}$ values. For example, the ground band in $Np^{237}$ exhibits a $\mathfrak{J}$ value 25% greater than does the band at 60 kev. Qualitatively, the compression of bands in odd-A nuclei is attributable to the effect of the coriolis interaction on the odd nucleon. The coriolis force on nucleons within a rotating spheroid couples particle and rotational motion.[20] The interaction is larger for larger $\langle j \rangle$ values in the eigenfunction (j is nucleon total angular momentum). It is thus reasonable that the even parity ground band with mainly $i_{13/2}$ character should have the smaller rotational spacings.

If one attempts a quantitative calculation of the coriolis interaction using Nilsson's eigenfunctions, one usually finds that the strength of the interaction is considerably overestimated. Such is also usually the case for the related calculations of matrix elements of beta or gamma transitions. The overestimation is probably related to the neglect of other nucleons besides the odd one in the calculations.

The bands in $Pu^{239}$ and $Np^{237}$ considered in this paper show only very small deviations from the simple energy dependence of equation (1). More data are needed before attempting a detailed explanation in terms of second order effects

of the coriolis interaction and of the so-called "vibration-rotation" interaction[1] displayed in ground bands of even-even nuclei. The ground band in $Pu^{238}$ shows definite deviations from equation (1).

## Absolute Beta Transition Rates

An important consequence of the nuclear deformation is the imposition of a fairly restrictive selection rule in K on beta (and gamma) transition rates. Simply stated, this selection rule allows only transitions whose associated angular momentum (multipolarity) equals of exceeds the change in K between initial and final nuclear states.

A striking illustration of the K-selection rule is provided by the beta decay scheme of $Np^{238}$ (Figure 1a). The spin of $Np^{238}$ is 2, and hence the initial K value is 2. Beta decay groups to the 2+ states at 44.11 kev and 1030 kev are prominent, but the ft value for the former is more than two orders of magnitude greater than that of the latter. In the former case $\Delta K = 2$, and in the latter $\Delta K = 0$.

Operation of the K-selection rule is also significant in highly retarding the allowed beta transitions to the 3/2+, 5/2+ and 7/2+ states of the ground rotational band in $Pu^{239}$. The spin and parity of $Np^{239}$ are probably 5/2+.

Some progress has been made for odd-mass nuclei in classifying the beta transitions unhindered by the K-selection rule. We have not made detailed theoretical ft calculations with Nilsson's wave functions but rather have used[11,13] the approach of Alaga[21,22] in examining selection rules in the asymptotic quantum numbers of initial and final nucleon states.

For odd-mass nuclei of the heavy region all beta groups with definite initial and final Nilseon state assignments were examined. Three of these cases fell into the classification allowed ($\Delta I = 0, 1$, no), hindered ($\Delta n_z$ or $\Delta\Lambda$ selection rule violated), and seven were classified first forbidden ($\Delta I = 0,1$, yes), unhindered. The log ft values of all in these two classes fell within the range 5.6 to 7.0. One transition was first forbidden, hindered, with a log ft of 9.2.

## Absolute Gamma Transition Rates

For gamma transitions there are numerous examples of the restrictive nature of K-selection rules. To name but a few, there are the three M1 transitions to the ground band from the 285.7 kev state in $Pu^{239}$. They are all more than four orders of magnitude slower than single particle rates, since $\Delta K = 2$. M1 radiation does not measurably compete with E2 in the 2+ $\longrightarrow$ 2+ transition from the 1030- to the 44.11-kev level in $Pu^{238}$, since $\Delta K = 2$. Likewise the E1 transitions from the 391.8 kev level to the ground band in $Pu^{239}$ are even slower than is the general rule for E1 transitions; here $\Delta K = 3$.

Intraband E2 and M1 transitions are in a class by themselves. The E2 matrix elements are proportional to the square of the intrinsic quadrupole moment, $Q_0$. The M1 matrix elements are, according to Bohr-Mottelson theory,

proportional to $(g_\Omega - g_R)^2$, where $g_\Omega$ and $g_R$ are the gyromagnetic ratios for odd nucleon motion and for collective rotational motion, respectively. The theoretical rate expressions have been applied to the lower $Np^{237}$ bands.[14] Such applications of the theory have also been made to numerous nuclei of the rare earth region using coulomb excitation data.[23]

In odd-mass nuclei there are also numerous examples of abnormally retarded gamma transitions interconnecting different bands, where the retardation cannot be ascribed to the K-selection rule or the simple vector-projection relationships. The most striking example is provided by the numerous low energy electric dipole transitions of the heavy element region, some of which occur from the states at 59.57 kev and at 267.5 kev in $Np^{237}$ (Figure 2c) and from the state at 391.8 kev in $Pu^{239}$ (Figure 1b). Those whose lifetimes have been measured are between $10^4$ and $10^6$ times slower than theoretical rates from Moszkowski's single proton lifetime formula. Explanations have been advanced[24] for the retardation in terms of selection rules involving quantum numbers appropriate to the Nilsson states in both the spherical and highly deformed limits. These low energy E1 transitions all violate selection rules in both limits. Numerical calculations of E1 matrix elements using Nilsson's eigenfunctions have been made,[24] and they show retardations on the average not quite as large as experimental. While the theoretical calculations reproduce fairly well the average retardation, they do not agree well on a case-by-case basis; evidently the cancellation of E1 matrix elements must be especially sensitive to small differences between the theoretical and actual wave functions.

A few cases of retarded M1 and E2 transitions, not K-forbidden, are known. The E2 transitions from the 285.7 kev state to the ground band in $Pu^{239}$ (Figure 1b) are somewhat retarded below single particle rates. The retardation is ascribed to violation of an asymptotic quantum number selection rule. There is a change in $\Sigma$ of one in these transitions ($\Sigma$ being the projection of intrinsic spin on the nuclear axis), and the selection rules for electric transitions allow no change in $\Sigma$. The transitions from the 267.5 kev metastable state in $Np^{237}$ with half-life $5.4 \times 10^{-9}$ sec. form an interesting group for comparisons. None are K-forbidden according to the most probable (K=3/2) assignment of the state; a possibility of a K = 1/2 assignment exists, though. The E1 radiation to ground is highly retarded, as is usual for E1. The unusual feature is that the M1 transition to the 60 kev state is retarded by more than $10^4$, and the E2 and M2 transitions are retarded between one and two orders of magnitude from single particle rates. The explanation of the M1 and E2 retardation is that it is due to violation of selection rules in the asymptotic quantum numbers.[13] If the alternative I = 3/2-, K = 1/2 [5, 3, 0] assignment to the 267.5-kev state is correct, then the retardation of the M1 is due to K-forbiddenness, but the explanation of retardation of E2 remains unchanged. There is some problem to explain the observed retardation of the M2, since by either assignment it is allowed by asymptotic quantum number selection rules.

## Conversion Coefficient Anomalies

A number of the E1 transitions in the heavy region exhibit anomalous internal conversion coefficients (abbreviated hereafter as ICC). Beta decay of $U^{237}$ provides four examples of E1 transitions, three of which show anomalous

ICC's. The retarded 60 kev transition to ground has a normal $L_{III}$ conversion coefficient but abnormally high ICC's in the $L_I$ and $L_{II}$ subshells. The retarded 267.5 kev transition appears to have a high K conversion coefficient. The 65-kev transition from the 322-kev level seems to have normal ICC's. In $Pu^{239}$ the 106 kev E1 from the 391.8 kev level has anomalously high $L_I$ and $L_{II}$ conversion coefficients, but the more highly retarded, K-forbidden E1's to the ground band have normal ICC's.

Anomalies due to dynamic nuclear structure effects can arise by virtue of the fact that different nuclear matrix elements can produce internal conversion when electron density lies inside the nucleus.[25] The anomalous contributions are only observable when the normal radiative process is highly retarded and the anomalous conversion process is not. In the case of E1 anomalies, only the penetrating electrons ($s_{1/2}$ or $p_{1/2}$) show definite anomalies. When the radiative process is predominantly retarded by the radial factor in the nuclear matrix element, the anomalous conversion operators often relax the restriction. The angular factors in the matrix elements are the same, so to the extent that retardation is due to K-forbiddenness (i.e. the E1 transitions from the 392 kev state to the ground band in $Pu^{239}$) anomalies may not appear. The data clearly show this significance of K-selection rules in the occurrence of ICC anomalies, but data are too few to allow a real test of the utulity of selection rules in the asymptotic quantum numbers for anomalous contributions.

## CONCLUSION

The successes of the spheroidal nuclear model have given much impetus to further experimental and theoretical work. It should be possible to refine the theoretical wave functions to improve agreement with experiment. The successes may also help provide the key to understanding properties of nuclei in regions not presently tractable by spherical or spheroidal models.

## REFERENCES


1. Bohr, A., and Mottelson, B.R., Particle Aspects of Nuclear Structure, Kgl. Danske Videnskab. Selskab., Mat.-fys. Medd. 27: No. 16 (1953); in Beta- and Gamma-Ray Spectroscopy, Interscience Publishers, Inc., New York (1955) Chap. 17.

2. Strominger, D., Hollander, J.M., and Seaborg, G.T., Table of Isotopes, Revs. Mod. Physics (in press).

3. Smith, W.G., and Hollander, J.M., Conversion Electron Spectra of $Cm^{242}$ and $Cm^{244}$, Phys. Rev. 101: 746 (1956).

4. Mayer, M.G., and Jensen, J.H.D., Elementary Theory of Nuclear Shell Structure, John Wiley and Sons, Inc., New York (1955).

5. Alaga, G., Alder, K., Bohr, A., and Mottelson, B.R., Intensity Rules for Beta and Gamma Transitions to Nuclear Rotational States, Kgl. Danske Videnskab. Selskab, Mat.-fys. Medd. 29: No. 9 (1955).

6. Rasmussen, John O., Slätis, Hilding, and Passell, Thomas O., Beta Emitter $Np^{238}$. I. Beta Spectroscopy, Phys. Rev. 99: 42 (1955); Rasmussen, J.O., Stephens, F.S., Strominger, D., and Åström, B., Beta Emitter $Np^{238}$. II. Scintillation Spectroscopy and Coincidence Studies, Phys. Rev. 99: 47 (1955).

7. Baranov, S.A., and Shlyagin, K.N., Energy Levels of the Nuclei in $Pu^{238}$ and $Pu^{239}$, Atomnia Energia 1: 52 (1956).

8. Albridge, R.G., and Hollander, J.M., The Decay of Neptunium-238, UCRL-8034 (November, 1957).

9. Hollander, J.M., Smith, W.G., and Mihelich, J.W., Energy Levels of $Pu^{239}$ Populated by the Beta Decay of $Np^{239}$, Phys. Rev. 102: 740 (1956).

10. Smith, W.G., Gibson, W.M., and Hollander, J.M., Electron-Capture Decay of $Am^{239}$ and $Am^{240}$, Phys. Rev. 105: 1514 (1957).

11. Hollander, J.M., Beta Decay and Electron Capture Branching to the Levels of $Pu^{239}$, Phys. Rev. 105: 1518 (1957).

12. Asaro, F., Amiel, S., Hollander, J.M., and Thompson, S.G., unpublished results on $Cm^{243}$ decay (June, 1957).

13. Rasmussen, J.O., Canavan, F.L., and Hollander, J.M., Energy Levels of $Np^{237}$ Populated by the Beta Decay of $U^{237}$, Phys. Rev. 107: 141 (1957).

14. Hollander, J.M., Smith, W.G., and Rasmussen, J.O., Energy Levels of $Np^{237}$ Populated by Alpha Decay of $Am^{241}$, Phys. Rev. 102: 1372 (1956).

15. Hoffman, D.C., and Dropesky, B.J., Electron Capture Decay of $Pu^{237}$, Phys. Rev. 109: 1282 (1958).

16. Nilsson, S.G., Binding States of Individual Nucleons in Strongly Deformed Nuclei, Kgl. Danske Videnskab. Selskab., Mat.-fys. Medd. 29: No. 16 (1955).

17. Rassey, A.J., Nucleonic Binding States in Nonspherical Nuclei: Asymptotic Representation, Phys. Rev. 109: 949 (1958).

18. Mottelson, B.R., and Nilsson, S.G., On the Magnetic Moment and Rotational Spectrum of Thulium-169, Z. Physik 141: 217 (1955).

19. Strominger, D., I. Experimental Study of Nuclear Isomers in the Millimicrosecond Lifetime Range. II. Applications of Nilsson's Wave Functions for Deformed Nuclei, Ph.D. Thesis, University of California, Berkeley (1956), University of California Report UCRL-3374.

20. Kerman, A.K., Rotational Perturbations in Nuclei – Application to Wolfram-183, Kgl. Danske Videnskab. Selskab., Mat.-fys. Medd. 30: No. 15 (1956).

21. Alaga, G., New Type of Selection Rules in β Decay of Strongly Deformed Nuclei, Phys. Rev. 100: 432 (1955).

22. Alaga, G., Selection Rules for Beta and Gamma Particle Transitions in Strongly Deformed Nuclei, Nuc. Phys. 4: 625 (1957).

23. Temmer, G.M., and Heydenburg, N.P., Coulomb Excitation of Medium-Weight Nuclei, Phys. Rev. 104: 967 (1956).

24. Strominger, D., and Rasmussen, J.O., Concerning Lifetimes of Low Energy El Gamma Transitions in Odd Mass Spheroidal Nuclei, Nuc. Phys. 3: 197 (1957).

25. Church, E.L., and Weneser, J., Effect of the Finite Nuclear Size on Internal Conversion, Phys. Rev. 104: 1382 (1956); Nilsson, S.G., Rasmussen, J.O., On Anomalous Conversion Coefficients of Dipole Transitions, Nuc. Phys. 5: 617 (1958); Green, T.A., and Rose, M.E., Nuclear Structure Effects in Internal Conversion, Oak Ridge Report ORNL-2395 (1957) unpublished.

## DECAY INFORMATION

| Isotope | Half-life | Type of decay genetic relationships nuclear moments | Energy of radiation in Mev |
|---|---|---|---|
| $Am^{241}$ | 458 years | $\alpha$<br>Daughter $Pu^{241}$<br>$I = 5/2$<br>$\mu = +1.4$ nm<br>$q = +4.9$ barns | $\alpha$ 5.534(0.35%), 5.500(0.23%), 5.477(85%), 5.435(12.6%), 5.378 (1.7%), 5.311(0.012%)<br>$\gamma$ 0.02636(2.5%), 0.03320, 0.04346 (0.07%), 0.05957(36%), 0.099(0.023%), 0.103(0.019%) |
| $Pu^{237}$ | 45.6 days | EC 99+%, $\alpha$ 0.003% | $\alpha$ 5.65, 5.36<br>$\gamma$ 0.0332, 0.0435, 0.0596 |
| $Np^{239}$ | 2.35 days | $\beta^-$ decay<br>Daughter $U^{239}$<br>Daughter $Am^{243}$<br>Parent $Pu^{239}$<br>$I = 5/2$ | $\beta^-$ 0.723, 0.655, 0.439(16%), 0.382(21%), 0.327(35%), 0.070(?,22%)<br>$\gamma$ 0.04464($L_I/L_{II}/L_{III}$ = 2/1/1), 0.04940($L_I/L_{II}/L_{III}$ = 1/1.2/1.2), 0.05725($L_I/L_{II}/L_{III}$=<0.07/1.3/1.0), 0.0614, 0.06782($L_{II}/L_{III}$ 1.1), 0.1061 ($L_I/L_{II}$ 0.9), 0.1064, 0.1818, 0.2099 ($K/L_I$ 5.4), 0.2264, 0.2284($K/L_I$ 4.7), 0.2546, 0.2731, 0.2777($K/L_I$ 5.7), 0.2856, 0.3161, 0.335 |
| $Am^{239}$ | 12 hours | EC 99+%<br>$\alpha$ 4 x $10^{-3}$% | $\alpha$ 5.75<br>$\gamma$ with $\alpha$: 0.048 (50% of $\alpha$)<br>$\gamma$ with EC: 0.04470, 0.04947, 0.05731, 0.06791, 0.1818, 0.2099, 0.2265, 0.2283, 0.2776 |
| $U^{237}$ | 6.75 days | $\beta^-$ decay<br>Parent $Np^{237}$<br>Daughter $Pu^{241}$ | $\beta^-$ 0.248(96%), [illegible]<br>$\gamma$ 0.0264, 0.0332, 0.0435, 0.0596(36%, $L_I/L_{II}/L_{III}$ = 1.6/3.2/1.0), 0.0648 (2.3%, $L_I/L_{II}/L_{III}$ ~1/1/1), 0.1139, 0.1646(3.6%, $e_{K/\gamma}$ ~0.13, $K/L_I/L_{II}/L_{III}$= ~48/16/130/60), 0.2079(24%, $e_{K/\gamma}$ 2.3, $L_I/L_{II}/L_{III}$=7.7/1.0/0.06), 0.2342, 0.2675(0.86%, $e_{K/\gamma}$ 0.63, $K/L_I$ 3.1), 0.3323(1.4%, $e_{K/\gamma}$ 0.04, $K/L_{II}$ 1.5), 0.3353(0.2%, $e_{K/\gamma}$ 0.2), 0.3685, 0.371 |
| $Np^{238}$ | 2.10 days | $\beta^-$ decay<br>No EC (K)<br>parent $Pu^{238}$<br>daughter $Am^{242}$<br>$I = 2$ | $\beta^-$ 1.24(38%), 1.13(?,3%), 0.28(20%), 0.25(31%), 0.20(?,8%)<br>$\gamma$ 0.0441($L_{II}/L_{III}$ 1.2), 0.1017($L_{II}/L_{III}$ 1.7), 0.871(?), 0.885, 0.925, 0.940 ($K/L_I$+$L_{II}$ 3.5), 0.943, 0.986($K/L_I$+ $L_{II}/L_{III}$=3.7/1.0/0.2), 0.988, 1.027(K/L ~3), 1.030(K/L ~4) |

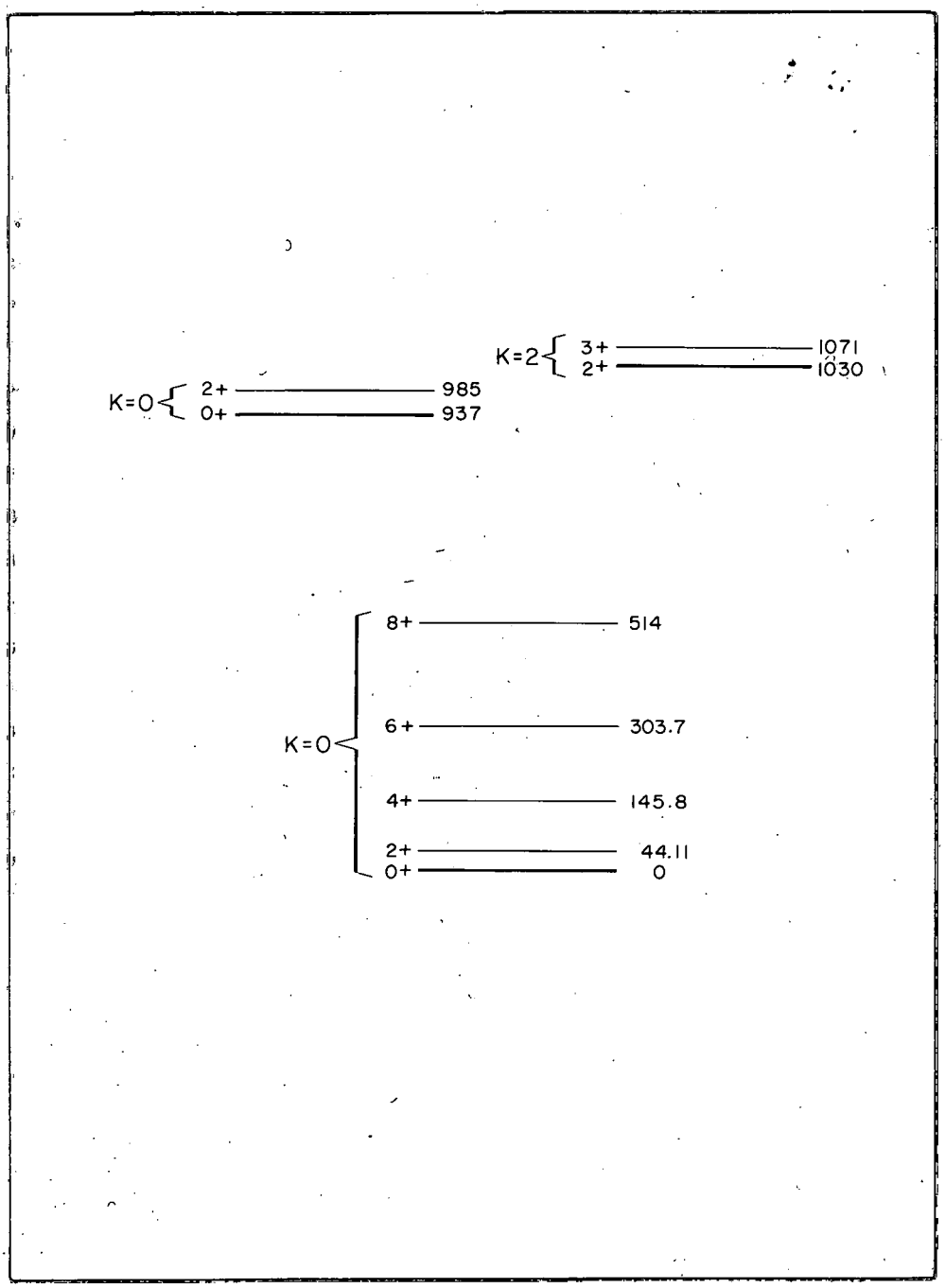


Fig. 1a. Energy Levels of $Pu^{238}$.

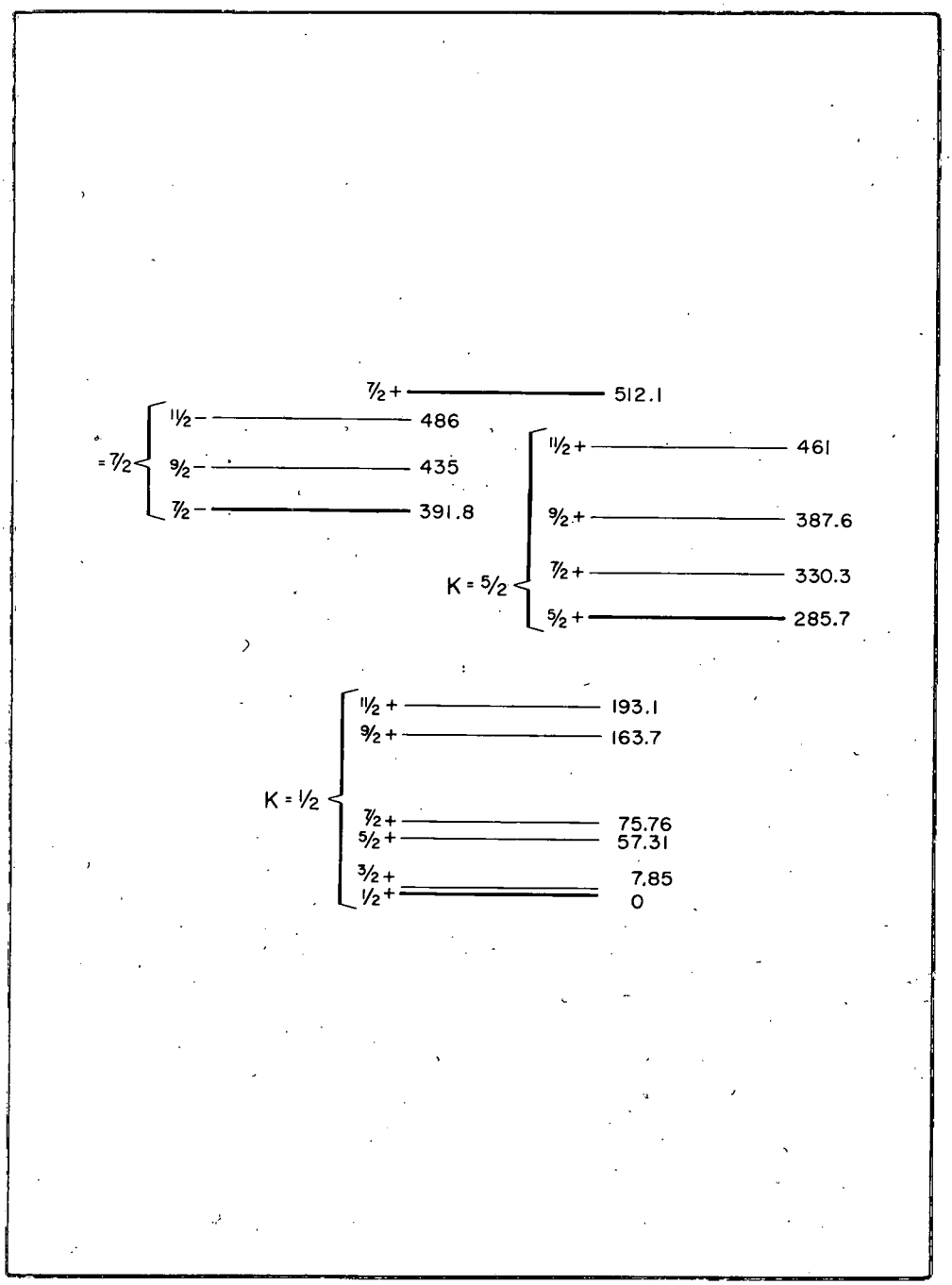


Fig. 1b. Energy Levels of $Pu^{239}$

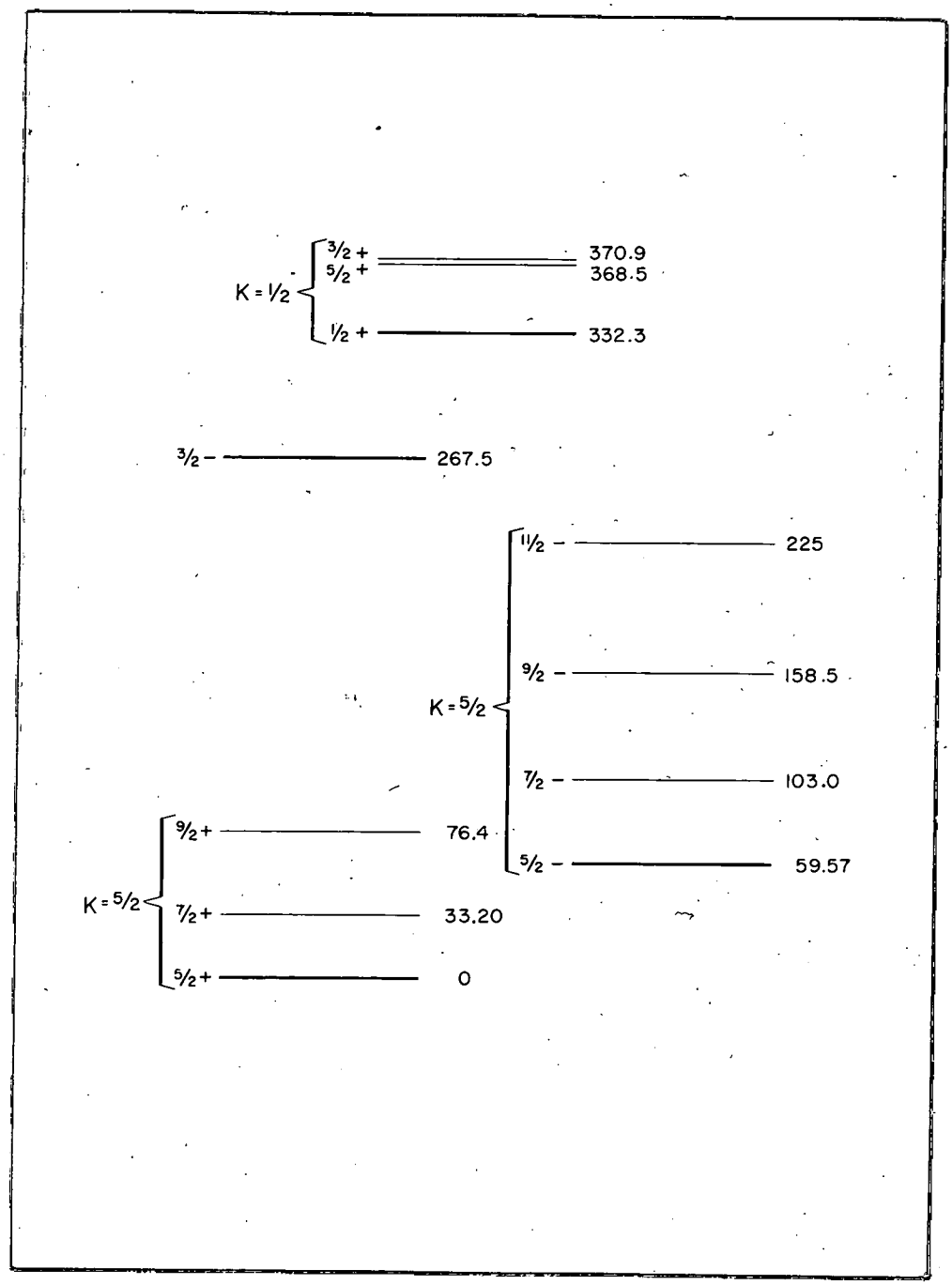


Fig. 1c. Energy Levels of $Np^{237}$

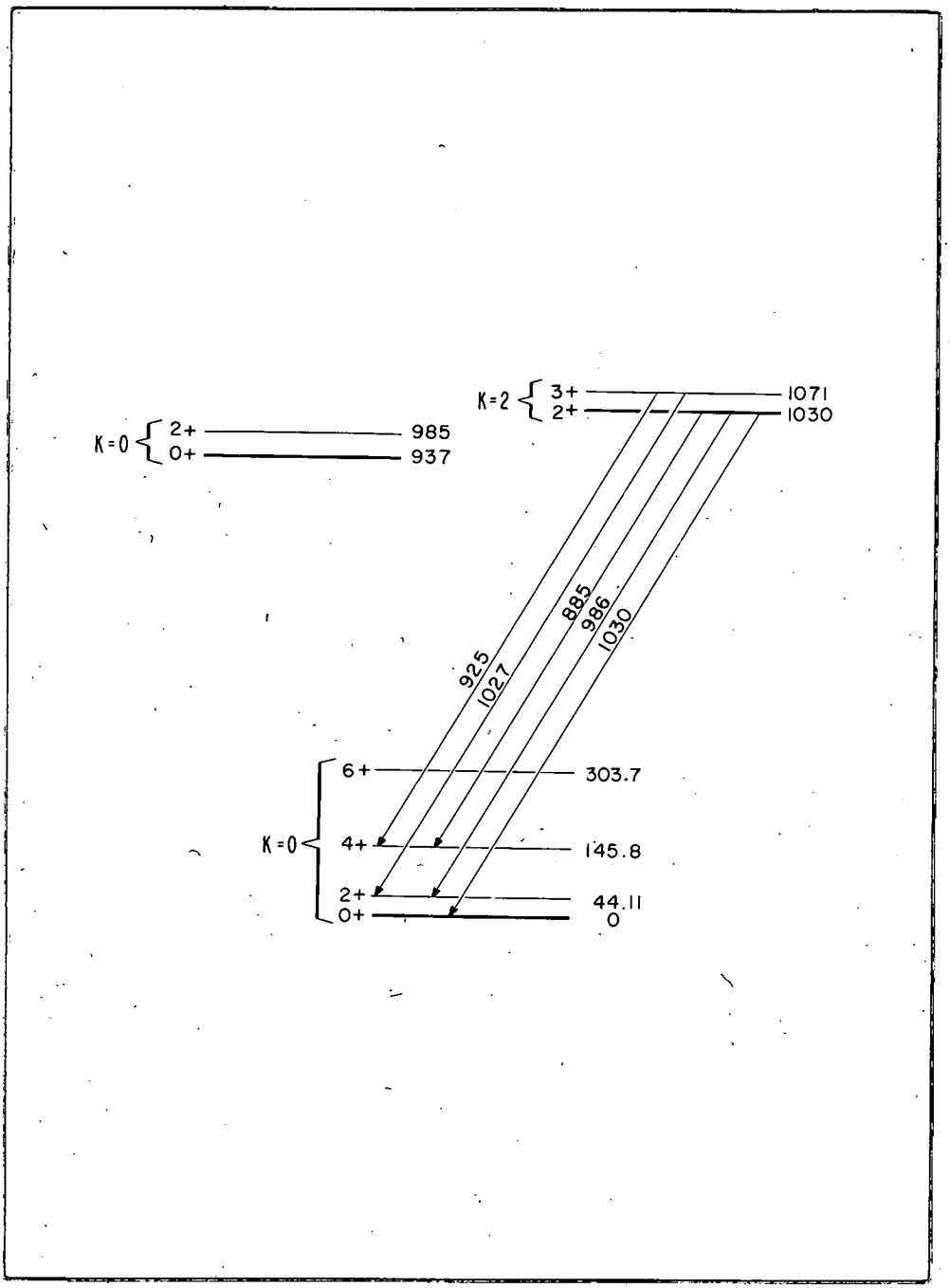


Fig. 2a. Some gamma-ray transitions in $Pu^{238}$ from $Np^{238}$ decay.

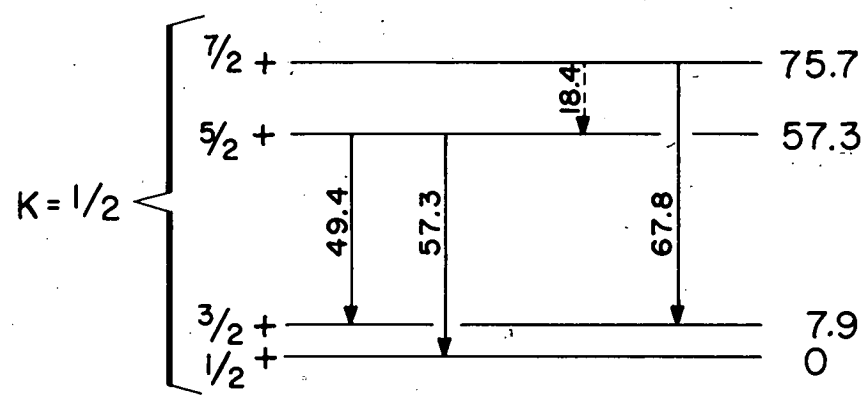


Fig. 2b. Some gamma-ray transitions in $Pu^{239}$ from $Np^{239}$ decay.

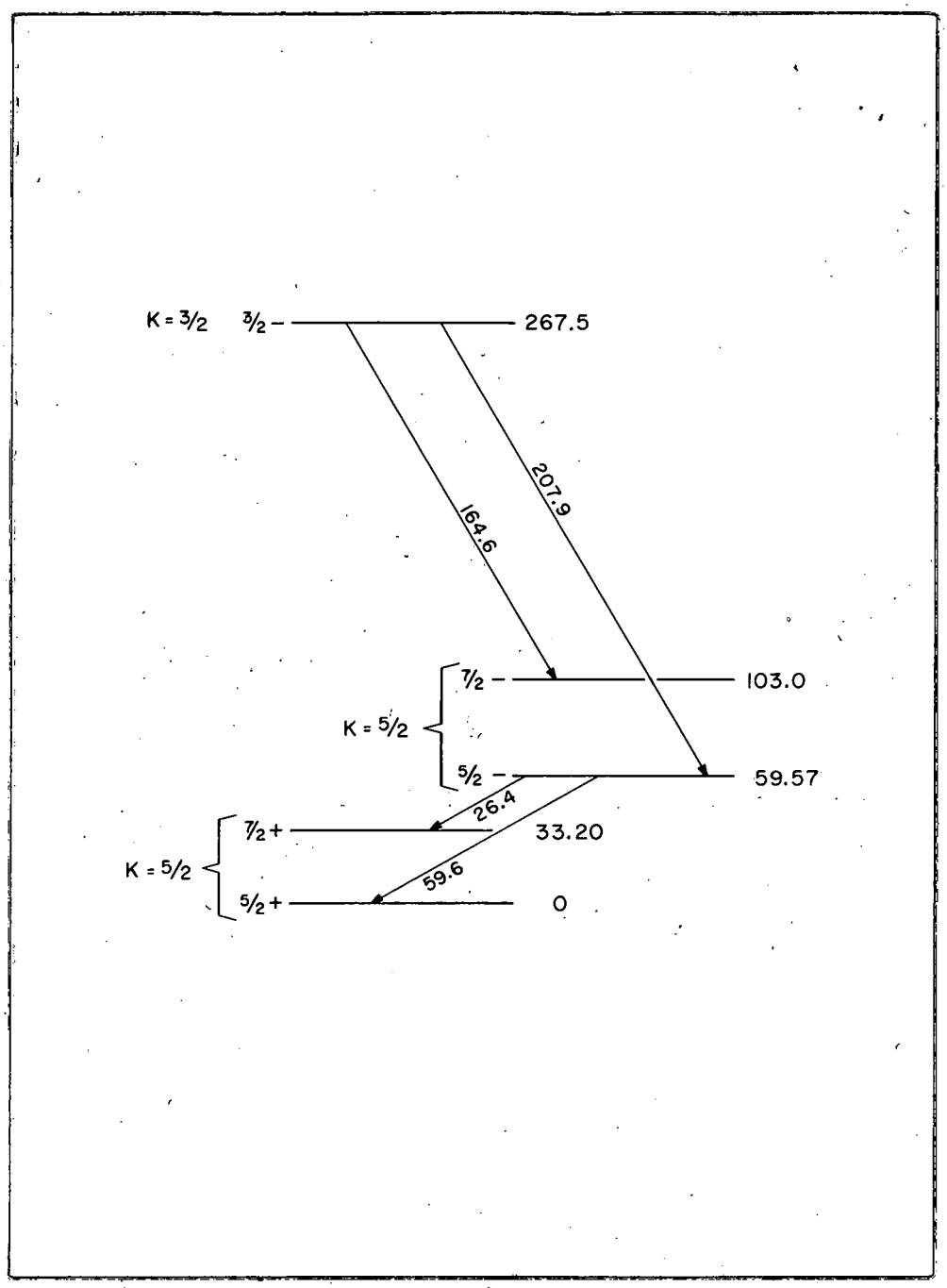


Fig. 2c. Some gamma-ray transitions in $Np^{237}$ following decay of $U^{237}$ and $Am^{241}$.

UNCLASSIFIED

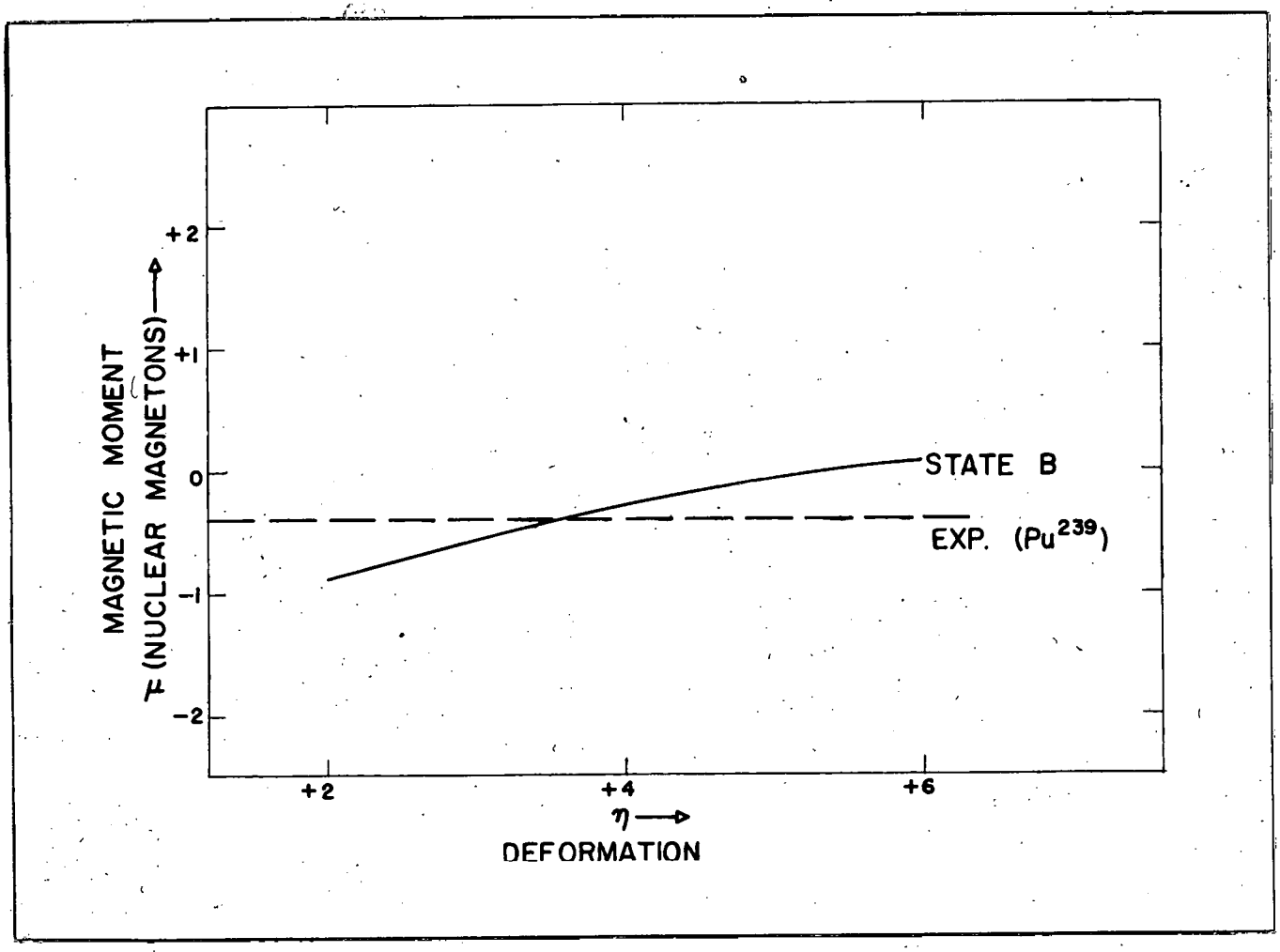


Fig. 3a. Calculated and experimental magnetic moments for $Pu^{239}$ ($K=1/2$). The Nilsson state B is even parity and has the asymptotic assignment ($N$, $n_z$, $\Lambda$) of (6, 3, 1). The deformation parameter $\eta$ is about twenty times $\delta$, the fractional excess of major over minor axis of the nuclear spheroid. Evidence from nuclear quadrupole moments in this region indicates a deformation of about $\eta=5$.



UNCLASSIFIED

UNCLASSIFIED

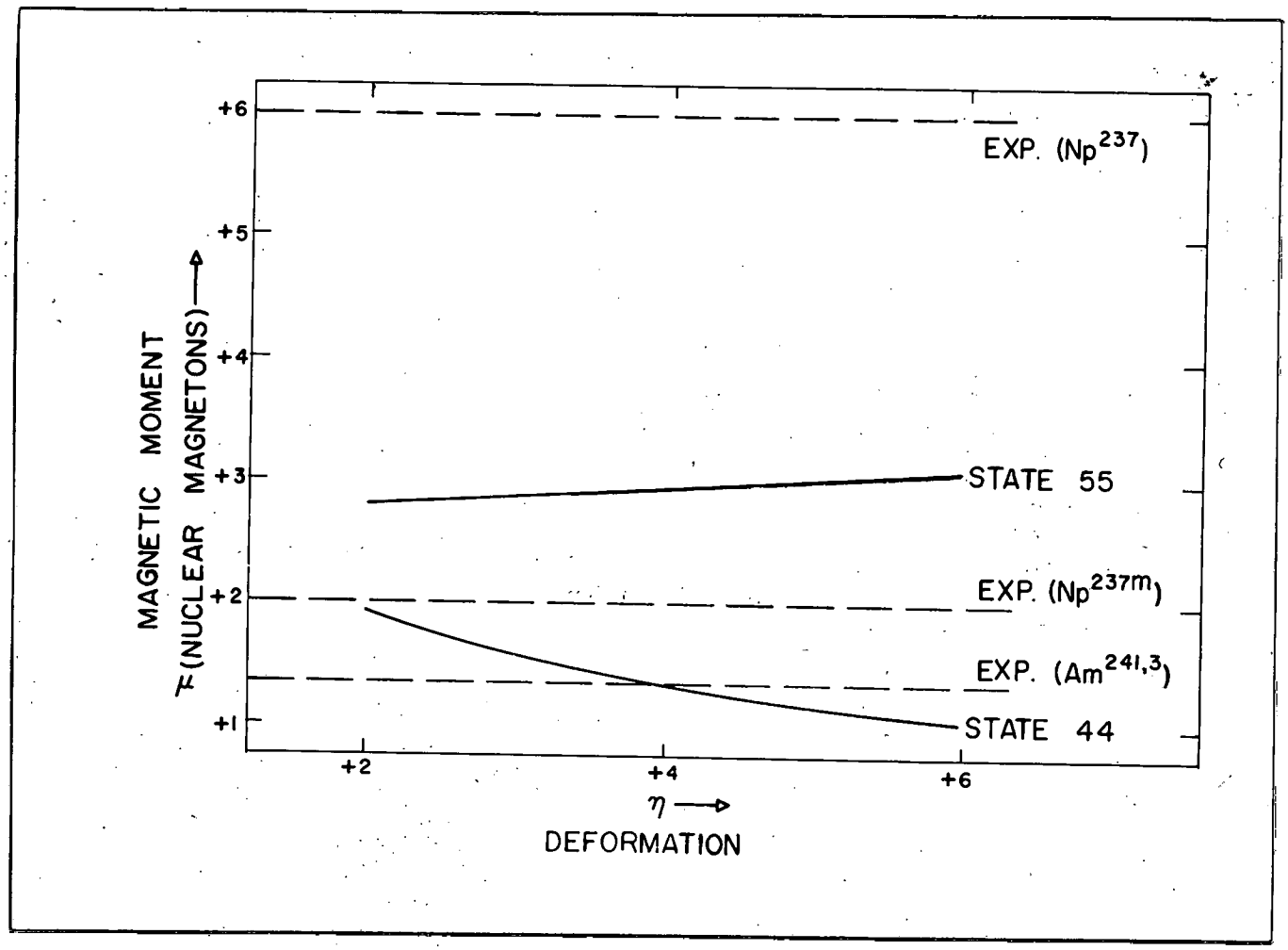


Fig. 3b. Calculated and experimental magnetic moments for $Np^{237}$, $Am^{241}$, and $Am^{243}$. I and K are 5/2 in all of these cases. Theoretical state 55 is even parity and assigned (6, 4, 2). State 44 is odd parity and assigned (5, 2, 3).

UNCLASSIFIED

OFFICIAL USE ONLY

UNCLASSIFIED

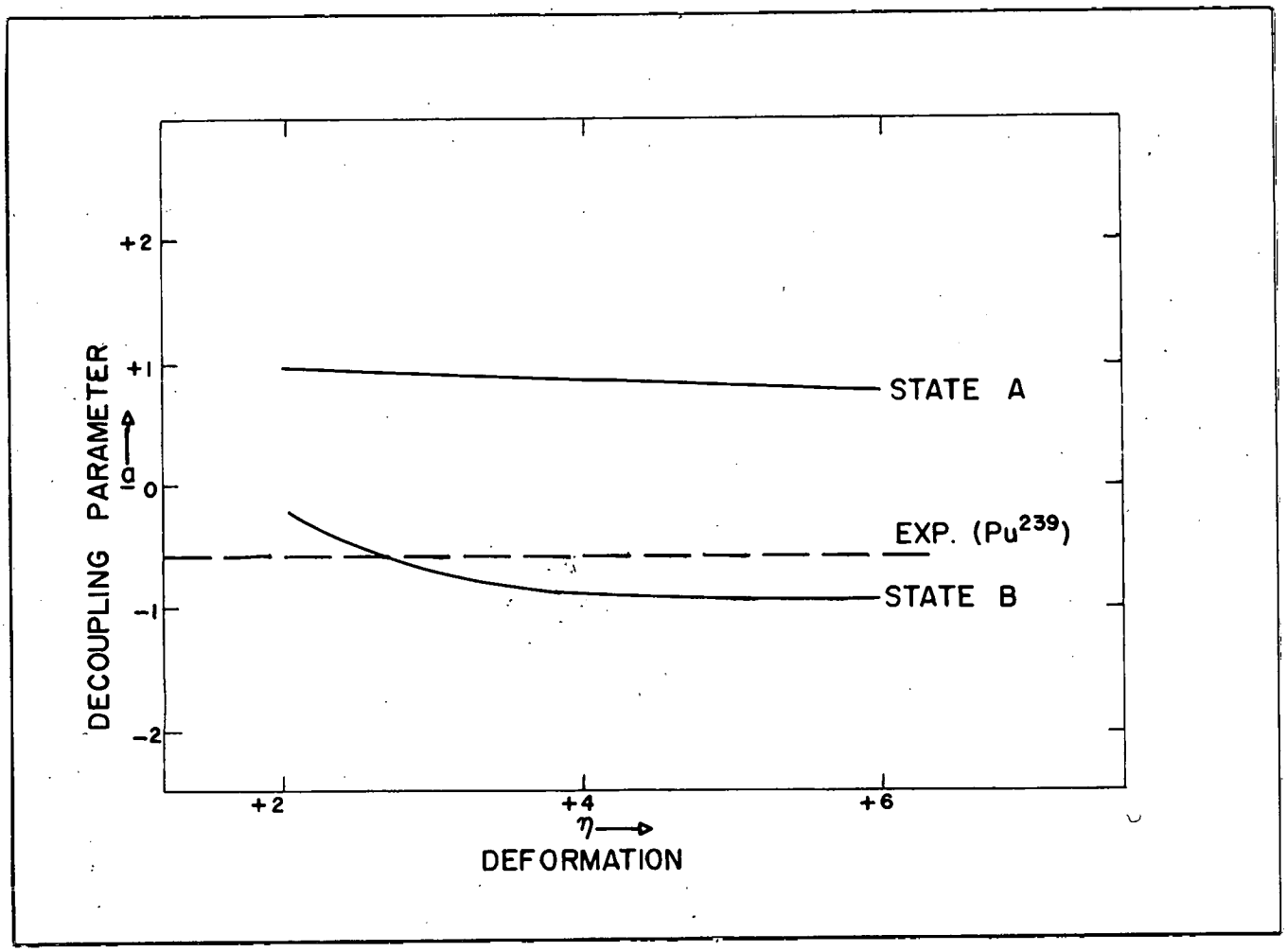


UNCLASSIFIED

Fig. 4. Calculated and experimental decoupling parameters for the ground band of $Pu^{239}$. Two possible K=1/2 states from Nilsson's work are considered. State B has even parity and the asymptotic quantum numbers (N, $n_z$, Λ) of (6, 3, 1). State A has odd parity and is assigned (5, 0, 1).

OFFICIAL USE ONLY

OFFICIAL USE ONLY

UNCLASSIFIED

UNCLASSIFIED

OFFICIAL USE ONLY