UCRL-8164
cy 2

UNIVERSITY OF CALIFORNIA

Ernest O. Lawrence Radiation Laboratory

TWO-WEEK LOAN COPY

This is a Library Circulating Copy which may be borrowed for two weeks. For a personal retention copy, call Tech. Info. Division, Ext. 5545

BERKELEY, CALIFORNIA

UCRL-8164 c.2

DISCLAIMER

This document was prepared as an account of work sponsored by the United States Government. While this document is believed to contain correct information, neither the United States Government nor any agency thereof, nor the Regents of the University of California, nor any of their employees, makes any warranty, express or implied, or assumes any legal responsibility for the accuracy, completeness, or usefulness of any information, apparatus, product, or process disclosed, or represents that its use would not infringe privately owned rights. Reference herein to any specific commercial product, process, or service by its trade name, trademark, manufacturer, or otherwise, does not necessarily constitute or imply its endorsement, recommendation, or favoring by the United States Government or any agency thereof, or the Regents of the University of California. The views and opinions of authors expressed herein do not necessarily state or reflect those of the United States Government or any agency thereof or the Regents of the University of California.

RADIATION LABORATORY - UNIVERSITY OF CALIFORNIA - BERKELEY

ENGINEERING NOTE

JOB NUMBER	FILE NO	PAGE
~~4310-17~~	~~MT-5~~	1/8

SUBJECT: Construction of a Temperature Regulated Bismuth Resistor

NAME: P. G. Watson

DATE: August 12, 1957

The following pages outline the procedure used at UCRL to construct the Bismuth probe described in UCRL-3729.

A major design aim, which increases the difficulty of construction, is small size. Unless the indicated dimensions are scaled up, the work should be attempted only by a person experienced in watchmaking or other delicate work.

The use of insulated platinum wire when and if it becomes available would allow simplification of the temperature sensing element design.

Wire sizes and dimensions not specified in this note may be found in UCRL-3729.

Initial Distribution

C.G. Dols
Clarence Vernon
P. G. Watson
ME EN File
MT EN File
MT Book 264

RADIATION LABORATORY - UNIVERSITY OF CALIFORNIA - BERKELEY

ENGINEERING NOTE

JOB NUMBER	FILE NO	PAGE
~~4310-17~~	~~MT-5~~	2/8

SUBJECT: Construction of a Temperature Regulated Bismuth Resistor

NAME: P. G. Watson

DATE: August 12, 1957

A. Initial Steps

1. Form small brass parts (pages 5 through 7 of this note) on a jeweler's lathe.

2. Cut wire access holes and slots in bismuth and platinum spools. (Make holes for platinum and slots for bismuth.) Make them oversized to allow for insulation. Shape bismuth slots to avoid sharp bends. (See UCRL-3729, Fig. 4, p. 22.)

3. Coat with epoxy resin (Shell Oil Company's Epon with curing agent D) all places where electrical ground faults are possible. (Leave parts mounted in lathe to simplify step 4.)

4. Re-machine to form Epon to proper dimensions.

B. Bismuth Section

1. Install bismuth terminals (terminal ring imbedded in Epon is one terminal, center manganin lead is the other).

2. Solder two manganin isolation leads five inches long to terminal ring and tin terminals with low temperature solder.

3. Wind bismuth resistor, reversing direction of rotation at the half-way point. (Bare bismuth ends with acetone.)

4. After soldering with low melting solder, coat entire bismuth element with Epon and re-machine to proper outside dimensions.

C. Platinum Section

1. Cut helical groove 184 T.P.I. in Epon layer coating the bed of the platinum form. (Leave 5 to 10 mils of Epon thickness.)

2. Install terminals in platinum coil form by first installing the Teflon tube (see Section F. 1.) in its assembly position. Then shape the terminal wires and tie them to the Teflon in the desired position. Cement with Epon.

3. Solder a 30-inch length of platinum wire to one terminal wire and wind along the helical groove and through an insulated slot (not shown) passing into the enlarged end section of the form.

4. Coat terminal wire junction and coil section with Epon.

5. Cut a helical groove (184 T.P.I.) in the Epon covering the completed winding. (Allow 6 to 8 mils radial clearance.)

6. Starting at the second terminal wire, repeat steps 3 and 4 above.

7. Join and solder platinum wires in the end section. (Caution: The wire breaks very easily where it emerges from the Epon.)

8. Coat junction with Epon and re-machine platinum element to proper outside dimensions.

9. Remove Teflon tube.

D. Heater Section

1. Rub down bifilar grooves to eliminate burrs.

2. Fold in half a 7-foot length of resistance wire and starting with the fold at the shoulderless, marginless end of the heater spool, wind the heater coil.

3. While windings are still tight, cement them with Epon.

4. Machine away excess Epon until tops of windings are almost exposed.

5. Coat the heater lightly with glue and wrap with cotton. When glue sets, remove excess cotton until there is just enough for a soft shock mount within the probe cover.

E. Mounting Post and Probe Base Wiring

1. Construct a probe cable by cutting eight 3-foot lengths of No. 30 double formvar copper wire. With these make the three sets of twisted conductors shown in cross section B-B of the assembly drawing.

2. Pull the twisted lead sets through thirty-inch lengths of plastic tubing with the approximate dimensions 0.030 inch ID and 0.060 inch OD or smaller. Over each, slip wire braid stripped from phonopickup cable.

3. Starting from the end of the probe base opposite the three threaded holes, pull the group of three shielded leads through the probe base until the ends stick out three inches.

4. Strip away 2-1/2 inches of shielding and 2 inches of plastic tubing.

5. Pass the eight cable wires through the end holes of the mounting post and squirt Epon into each hole.

6. Bare and shape the wire ends to form a set of terminals for the probe wiring. (Alternately staggering the lengths of these terminals by 1/8 inch allows more room for connections - see assembly drawing.)

7. Pull the cable leads back until the mounting post is seated in the probe base. Solder these two parts through the two holes shown in the probe base sketch.

8. The probe cable can now be completed by pulling a 1/4 inch braid over the three shielded leads, soldering this to the end of the probe base, and pulling 1/4 inch sleeving over the braid and up to the second step on the probe base.

9. Wire a cannon connector to the end of the cable.

RADIATION LABORATORY - UNIVERSITY OF CALIFORNIA - BERKELEY

ENGINEERING NOTE

JOB NUMBER	FILE NO	PAGE
~~4310-17~~	~~MT-5~~	4/8

SUBJECT: Construction of a Temperature Regulated Bismuth Resistor.

NAME: P. G. Watson

DATE: August 12, 1957

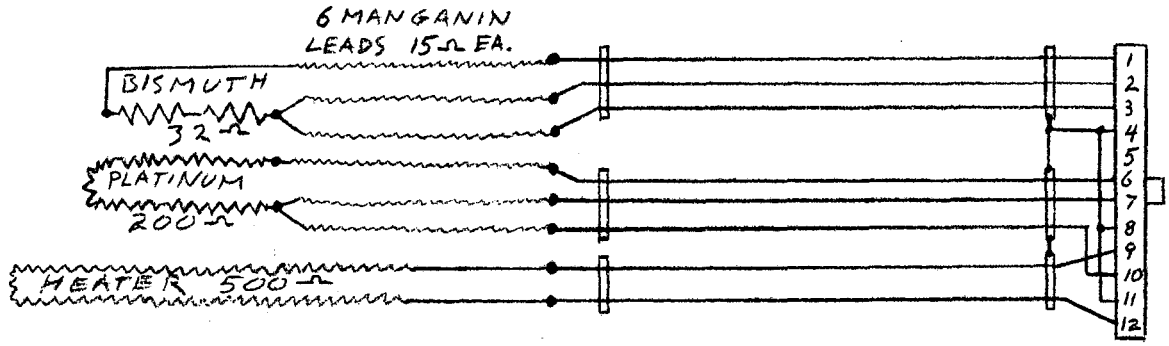

F. Final Assembly

1. Feed the leads from the bismuth element into one end of a 0.020" ID, 0.040" OD Teflon tube 0.5" long and out through small holes 0.2" down along the tube.

2. Solder three 5" long manganin leads to the terminals on the platinum element.

3. Insert the bismuth element into the platinum element and press the Teflon tube into place (tandem with the bismuth element).

4. Insert this core assembly into the heater element (use a special ramrod if necessary to avoid damaging leads and terminals).

5. Twist the six manganin leads protruding from the assembly and then proceed to spiral this bundle around the Teflon tube, at the same time carefully stuffing the turns into the space between the Teflon and heater spool.

6. When all but an inch of leads have been coiled, press the Teflon tube onto the mounting post. At this point, check the overall length to insure that the probe cover will allow enough end clearance for the insulating plug at the probe tip. Feed the manganin leads and heater leads through the proper guide holes and solder them to the cable leads.

7. Solder a 0.003" copper wire to the shoulder of the heater spool and to the mounting post guide hole flange (see assembly drawing). Leave adequate slack in this wire, preferably by taking a turn around the Teflon tube and probe leads.

8. Insert a styrofoam or other heat insulating plug in the tip end of the probe before sliding the probe cover in place.

RADIATION LABORATORY - UNIVERSITY OF CALIFORNIA - BERKELEY

ENGINEERING NOTE

JOB NUMBER	FILE NO	PAGE
~~4310-17~~	~~MT-5~~	5/8

SUBJECT: Construction of a Temperature Regulated Bismuth Resistor

NAME: P. G. Watson

DATE: August 12, 1957

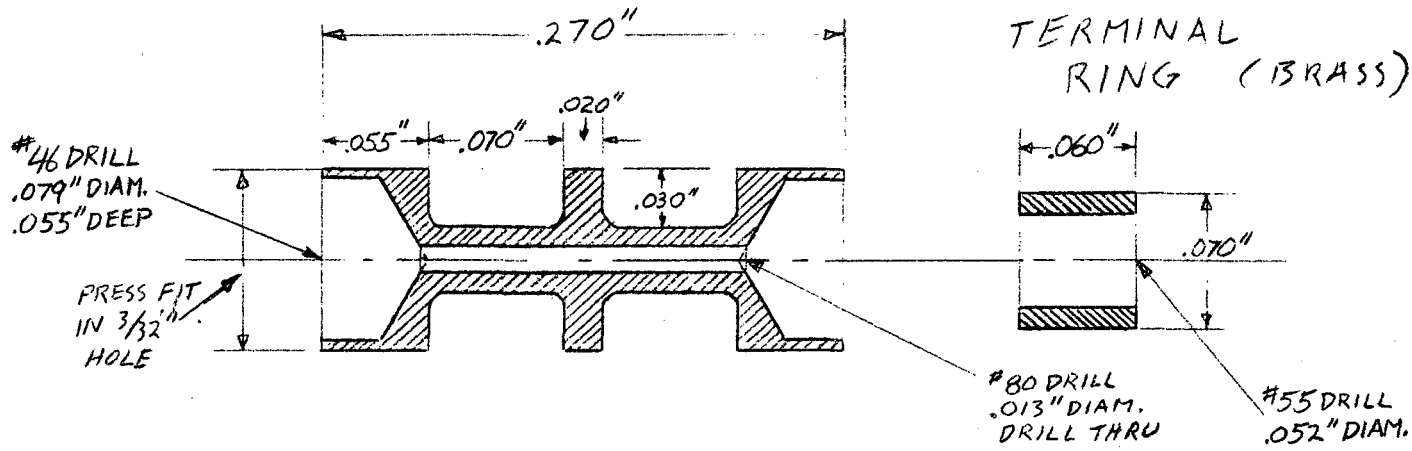

BISMUTH SPOOL (BRASS)

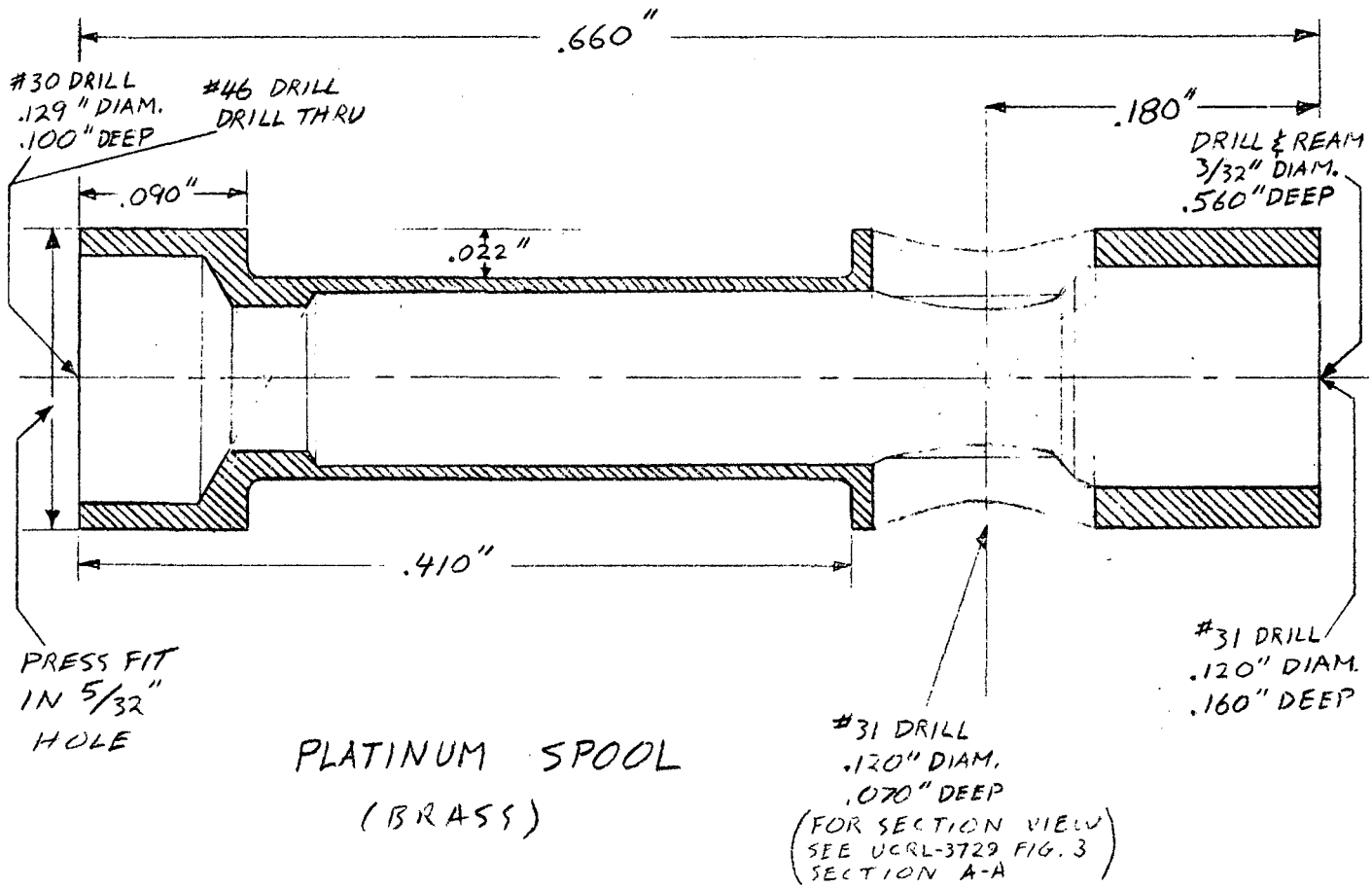

PLATINUM SPOOL (BRASS)

RL-398.

RADIATION LABORATORY - UNIVERSITY OF CALIFORNIA - BERKELEY

ENGINEERING NOTE

JOB NUMBER	F. E. NO.	PAGE
~~4812-17~~	~~MT-5~~	6/8

SUBJECT: Construction of a Temperature Regulated Bismuth Resistor

NAME: P. G. Watson

DATE: August 12, 1957

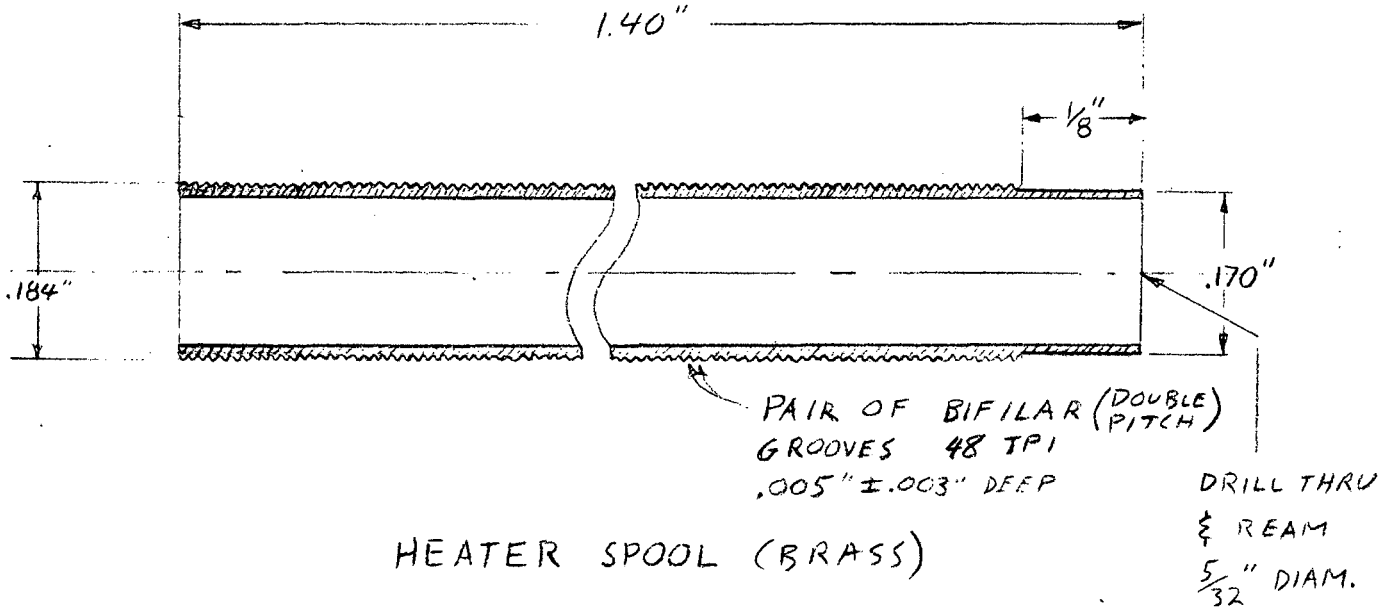

HEATER SPOOL (BRASS)

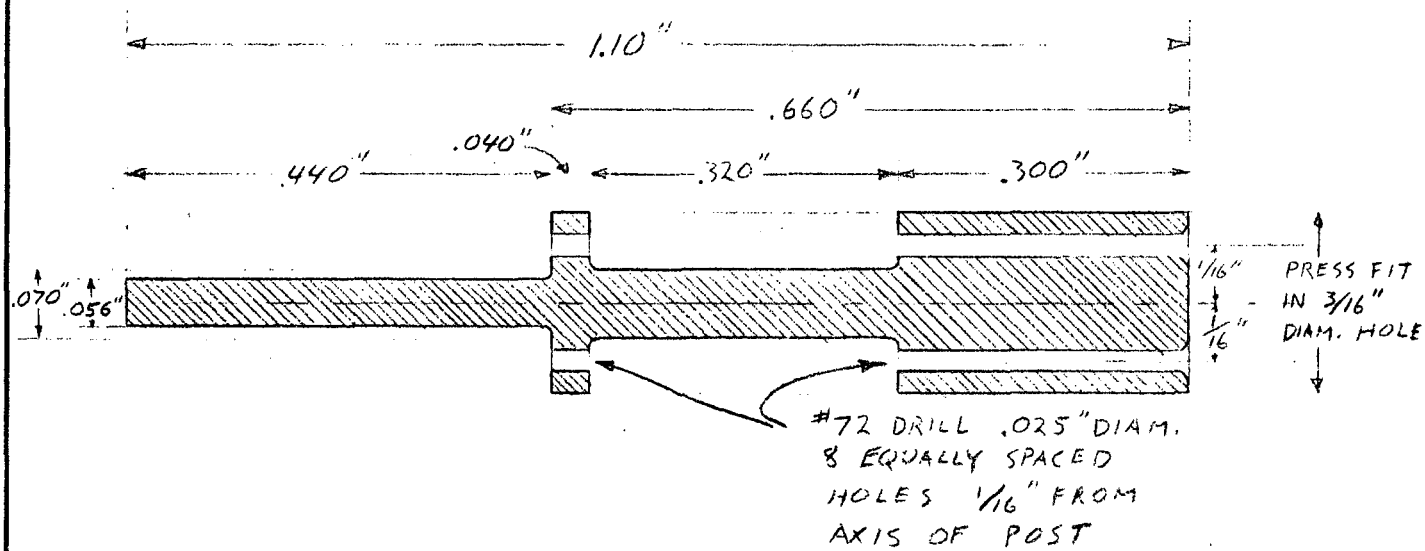

MOUNTING POST (BRASS)

RL-398.

RL-398-

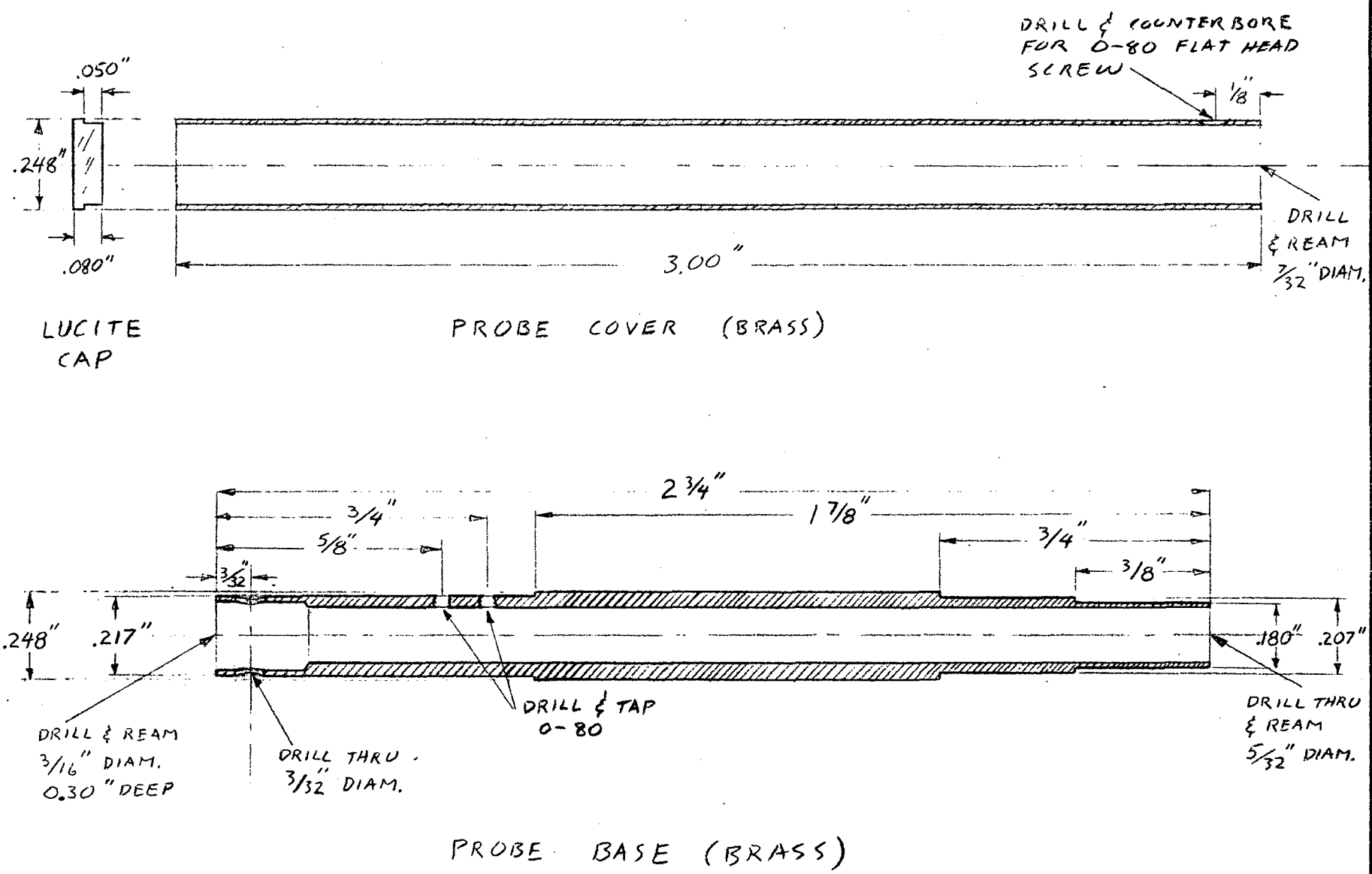

RADIATION LABORATORY - UNIVERSITY OF CALIFORNIA - BERKELEY

ENGINEERING NOTE

SUBJECT: Construction of a Temperature Regulated Bismuth Resistor

NAME: P. G. Watson

DATE: August 12, 1957

JOB NUMBER: 310-17

FILE NO: MT-5

PAGE: 7/8

UCRL 8164 MT-62

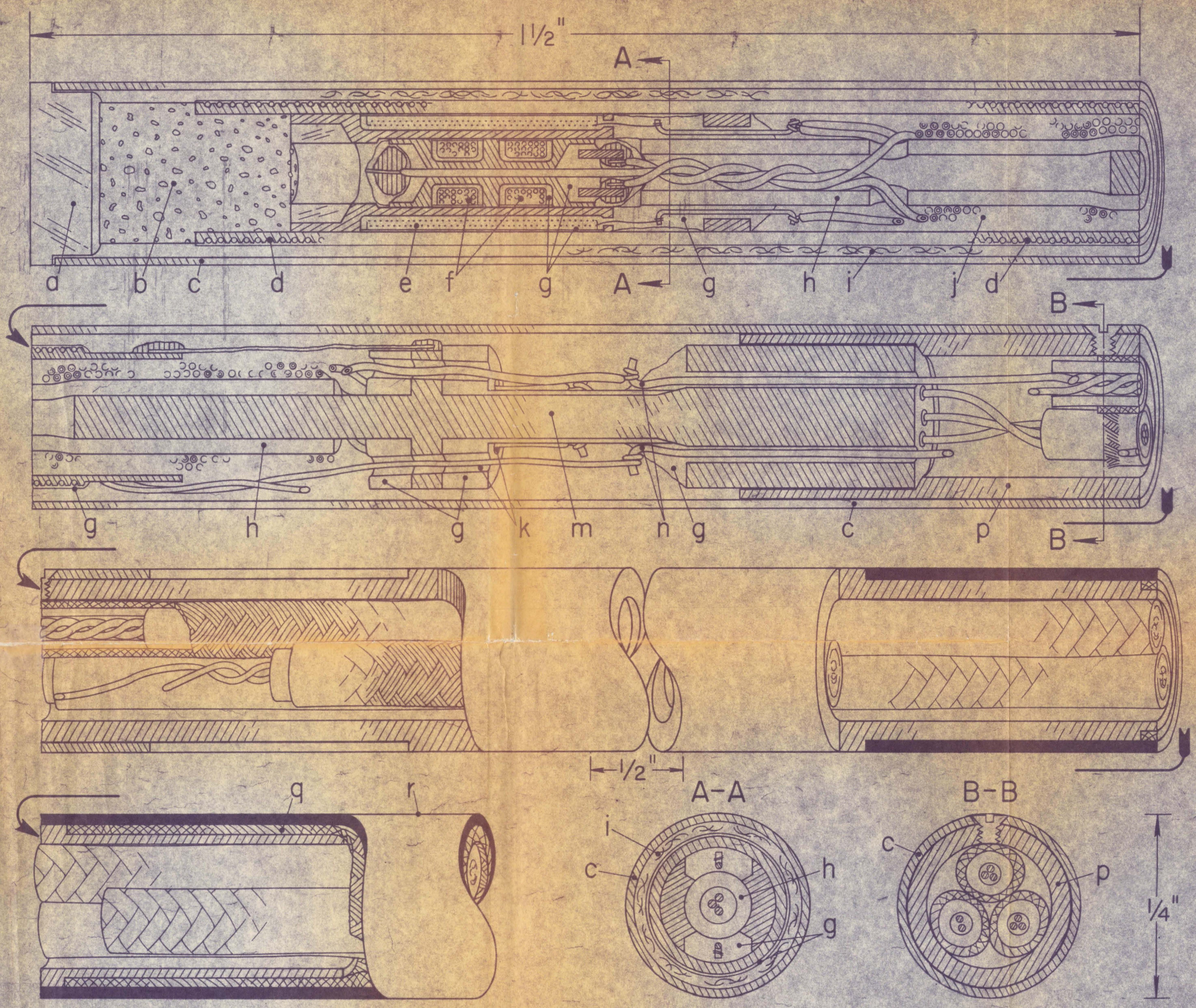

Construction of a Temperature Regulated Bismuth Resistor

Assembly Drawing (see UCRL 3729 for explanation of code letters)

UCRL 8164
EN ~~4310-17 MT-5~~ Page 8/
MT-62
P.G. WATSON 8-12-57

50,098-4