UCRL 8188

UNIVERSITY OF CALIFORNIA

Radiation Laboratory

TWO-WEEK LOAN COPY

This is a Library Circulating Copy which may be borrowed for two weeks. For a personal retention copy, call Tech. Info. Division, Ext. 5545

BERKELEY, CALIFORNIA

DISCLAIMER

This document was prepared as an account of work sponsored by the United States Government. While this document is believed to contain correct information, neither the United States Government nor any agency thereof, nor the Regents of the University of California, nor any of their employees, makes any warranty, express or implied, or assumes any legal responsibility for the accuracy, completeness, or usefulness of any information, apparatus, product, or process disclosed, or represents that its use would not infringe privately owned rights. Reference herein to any specific commercial product, process, or service by its trade name, trademark, manufacturer, or otherwise, does not necessarily constitute or imply its endorsement, recommendation, or favoring by the United States Government or any agency thereof, or the Regents of the University of California. The views and opinions of authors expressed herein do not necessarily state or reflect those of the United States Government or any agency thereof or the Regents of the University of California.

UCRL-8188

UNIVERSITY OF CALIFORNIA

Radiation Laboratory
Berkeley, California

Contract No. W-7405-eng-48

DEVELOPMENT OF AN OCCLUDED-GAS ION SOURCE

Kenneth W. Ehlers, James D. Gow, Lawrence Ruby,
and John M. Wilcox

February 20, 1958

Printed for the U. S. Atomic Energy Commission

DEVELOPMENT OF AN OCCLUDED-GAS ION SOURCE

Kenneth W. Ehlers, James D. Gow, Lawrence Ruby,
and John M. Wilcox

Radiation Laboratory
University of California
Berkeley, California

February 20, 1958

ABSTRACT

An ion source for pulsed operation has been developed, which is based on producing a spark discharge between electrodes of a transition metal in which ordinary hydrogen or deuterium has been occluded. The beam consists principally of ions of hydrogen and of the electrode material. No neutral gas is evolved between pulses. High beam-current densities have been obtained, both with axial and with radial extraction. Various methods have been devised for filtering out the heavy-mass components of the beam.

DEVELOPMENT OF AN OCCLUDED-GAS ION SOURCE

Kenneth W. Ehlers, James D. Gow, Lawrence Ruby,
and John M. Wilcox

Radiation Laboratory
University of California
Berkeley, California

February 20, 1958

INTRODUCTION

This paper summarizes the present state of development of the occluded-gas ion source. Earlier work has been reported briefly[1] and further details are available.[2,3] The goal of the investigation has been to devise a practical hydrogen ion source for pulsed accelerator operation, which is based on the ionization produced in a spark discharge between electrodes of a transition metal such as titanium. Before use, the electrodes are made to occlude a considerable quantity of normal hydrogen or deuterium. This mechanism was suggested by the prior development of an evaporated occluded gas ion source by J. D. Gow.[4] Suitable geometries have been devised by which ions can be extracted from such a discharge. The specific current densities obtained compare favorably with those produced by high-current arc discharges. The beam composition consists principally of ions of hydrogen and of the electrode material, in a ratio that depends on conditions of operation of the source and extraction of the beam. A particular advantage of this type of ion source is that neutral gas is not evolved between pulses, as with conventional sources.

Several metals in the transition regions of the periodic table have the ability to absorb exothermically (i.e., occlude) large quantities of hydrogen.[5] This absorption is accompanied by large volume expansions--10 to 15%--and by embrittlement. Titanium, at room temperature, has the largest known occlusive capacity. In fact, the saturation concentration of hydrogen in Ti is greater than in any other form in which hydrogen is known to exist at atmospheric pressure. In addition, Ti metal is available commercially in many forms, and thus it was the logical choice for the investigations.

The evidence is quite conclusive that in those metals which are exothermic occluders hydrogen exists not only in lattice rifts, as for other hydrogen-absorbing substances, but also distributed regularly within the lattice structure.[6] This hydrogen is contained in the atomic form, is at least partially ionized, and, in

fact, is probably in the metallic state.[7] This last conclusion is suggested by the fact that although the hydrogen atom is small enough to require no expansion of the Pd lattice to contain it, the observed expansion is 11%. It has been calculated that metallic hydrogen would be stable relative to covalent hydrogen at pressures of not less than 2.5×10^5 atmospheres, and such an internal pressure in Pd would produce a volume increase of about 10%.

A controversy has been reported in the literature on whether ions can be obtained from palladium, the most thoroughly studied exothermic occluder, solely by heating of the metal. The problem is reviewed by Stansfield.[8] He concludes, in accord with our own experience, that there is no spontaneous emission of protons from hydrogenated palladium. However, in a recent re-investigation of the question at Syracuse University,[9] a proton current of 10^{-10} amp was observed[10] from heated Pd, and with a sufficiently low collector voltage--3 to 5 volts--to ensure the absence of spurious discharges. The current thus obtained is sensitive to the degree of hydrogenation of the Pd. However, this current is far lower than those at issue; e.g., Fransini[11] observed more than 0.3 ma. It is possible that the latter result and others[10] similar to it can be explained on the basis that unobserved low-current arc discharges produced the ionization found in the presence of heated palladium. On the theoretical side, it has been calculated, on the basis of energy conservation, that the binding energy of H^+ in Pd is 10.7 electron volts.[12] This would preclude any thermionic emission of protons.

Development of Source Geometry

Based on earlier experience,[4] an attempt was made to obtain a pulsed release of ions by discharging a low-impedance pulse line through a filament of hydrogenated titanium. With currents through the filament of up to 2000 amp, no positive-ion current was initially observed on a biased collector surrounding the filament. However, after only a few high-current pulses, a change occurred such that each subsequent pulse was accompanied by a bright blue flash in the vacuum system and positive-ion current to the collector. Examination of the filament showed that the 0.002-in. Ti had ruptured and formed a joint of high resistance. The high pulse-line potential produced a spark discharge across this joint. Further experimentation showed that the collected ion current increased with the number of such joints and that the presence of a thin insulator in each gap lowered the spark threshold voltage and ensured a predictable electrical resistance. After considerable evolution, the source appeared as shown in Fig. 1, a stack of alternately spaced Ti and mica washers, strung on an insulator for support and alignment. To measure the ion output, the source was surrounded with a collector biased with respect to that side

of the source which was at fixed potential. The single-gap form of the device has been adapted by Bostick for the study of the effect of electromagnetic fields on plasma blobs.[13]

Such an unconfined plasma is unsuited to the extraction of a concentrated beam of ions. Consequently, a rearrangement of the geometry was undertaken, so that the discharge was confined to the inside of the washer column. Limiting the volume resulted in a very dense plasma from which ions could be extracted at one end of the column.

One problem that arose immediately was how to confine the discharge to the inside of the washer stack. Making the outer diameter of the insulators larger than that of the washers did not eliminate the tendency of the discharge to frequently prefer the outside of the stack. The additional feature found necessary was to trigger the discharge in the central region. To do this, an insulated wire was inserted through the solid electrode so that the tip was concentric with the first washer. A microsecond high-voltage pulse was discharged between these last two elements. The resulting ionization both initiated the discharge of the pulse line and ensured the proper path. This trigger method made it possible to operate at lower pulse-line potentials than would be possible otherwise. The polarity of the source pulse line and the relative polarities of the source and the trigger pulses do not affect performance so long as the source is used without a magnetic field.

As a circuit element, the source acts like a hydrogen thyratron, and presents negligible impedance when in series with the pulse-line termination Z_o. For Z_o in the range 50 to 125 ohms, it has been found possible to pass sufficient current through the source to provide space-charge-limited ion beams at reasonable pulse-line charging voltages, i.e., 3 to 10 kv. One method of providing the trigger pulse is to discharge a capacitor through a pulse transformer whose secondary is across the trigger gap. If the trigger pulse does not supply sufficient current, the pulse line is delayed--i.e., it jitters--or does not discharge at all. Satisfactory circuit components have been found to be a 0.5-μf capacitor and a 6:1 step-up transformer whose secondary insulation is adequate for the pulse-line voltage. In addition, it is desirable to finish the output end of the pulse line with an inductance instead of a capacitor in order to prevent any premature extinction of the discharge. If insulators are used whose dielectric strength is low enough so that appreciable leakage current is drawn by the source, a triggered ball gap is inserted in series with the pulse line.

Basically, the source was composed of a stack of titanium washers separated by thin mica washers of slightly larger outer diameter. Prior to their assembly in this sandwich, the titanium washers were heated and outgassed in vacuum. They were then allowed to cool in an atmosphere of hydrogen or deuterium. This treatment allowed the titanium to occlude approximately 400 cc of hydrogen per gram of titanium metal.

For assembly, the washer stack was held in position with a loading mandrel while the two anode pieces were screwed firmly together. After the mandrel was removed, the stack was held in position solely by compression.

Axial Extraction

For axial extraction the washer stack was mounted as shown in Figs. 2 and 3. The focusing geometry used was similar to the geometry developed by Gow and Foster,[5] consisting of an extractor (or probe) in Pierce geometry which was held at a potential of -8 to -12 kilovolts with respect to the source, a focusing electrode whose potential could be adjusted to control the beam focus, and an accelerating electrode at a potential of -80 to -100 kv with respect to the source. By a change of the voltage applied to the focus electrode, the beam focus could be adjusted without changing the value of the beam current. When the snout of the extractor was changed from a conical metal surface with a hole at the apex to a surface of the same shape made of 32-mesh screen, an order-of-magnitude increase in beam was obtained. For a pulse length of 500 microseconds, it was necessary to limit the repetition rate to approximately one per second, so that the titanium washers would not get so hot that they would lose their occluded hydrogen.

When mass analysis of the axially extracted beam was first done, the heavy-mass components dominated the spectrum. In an effort to improve the proton fraction, the plasma drift tube shown in Figs. 2 and 3 was added. A small solenoidal electromagnet gave an adjustable magnetic field of a few hundred gauss in the region of the plasma tube.

The lighter ions would be confined by the axial magnetic field, while the heavier ions would be more likely to drift radially against this field. In fact, it was found that the mere presence of the plasma drift tube with zero magnetic field gave a considerable reduction in the heavy-mass components without reducing the proton beam. However, the proton ratio could be further improved by trimming the plasma-tube magnetic field to its optimum value.

The mass analysis was done as shown in Fig. 4. Most of the accelerated beam was collected in a carbon cup, which was protected by a guard ring. A bias curve run on the cup potential indicated that secondary-electron emission

did not materially change the observed currents. A 1/16-inch hole in the back of the cup allowed a small fraction of the total beam to pass through into a magnetic spectrometer. The transmission was thus limited in order to minimize the spreading and defocusing characteristic of large beam currents. The transmitted beam was bent by the magnetic field and a fraction was collected in the spectrometer cup. To observe the mass spectrum of the beam, the magnetic field was varied while the geometry was held fixed.

The mass spectrum obtained is shown in Fig. 5. In interpreting this information, one must remember that when the spectrum is obtained by varying the magnetic field, the width of each mass peak is proportional to the magnetic field at that point. Thus the amount of beam associated with each mass peak is proportional to the height of that peak, but not to the area under the peak. Since the spectrometer resolution was such that the heavier-mass peaks were not resolved, the exact ratio of H^+ to the total beam is somewhat uncertain, but would seem to be at least 50%. The total beam collected in the accelerator cup was 200 milliamperes, and thus there would be 100 milliamperes of H^+ available for further acceleration. Since the space-charge spreading caused by a particular ion component in the beam is proportional to the square root of the mass of that ion, the heavy-ion contamination in the beam causes a disproportionate space-charge spreading, and would have to be filtered out before the beam was further accelerated. If this source were used with an electrostatic accelerator it seems clear that further development would be needed to filter out the heavy ions without defocusing too many deuterons. A suggestion for overcoming the space-charge defocusing in the accelerator tube itself is discussed by Wilcox in the following paper.

Radial Extraction

The source has also been adapted to radial extraction of the beam. Figure 6 is a block diagram of the associated electronic components employed. The pulse line was charged by a variac-controlled 5-kv power supply. The current requirement for this supply is a function of the pulse-recurrence frequency, which, for this work, was arbitrarily set at 30 per minute. The characteristic impedance of this six-section line was 16 ohms. A series resistor was used to match the impedance of the pulse line. The pulse length was 400 microseconds, and with the line charged to the -5-kv level, the arc current was 165 amperes. The actual voltage appearing across the arc during operation was in the range of 100 to 125 volts.

The arc was triggered by a pulse from a thyratron-controlled pulse transformer. This pulse also fired a series gap, which in turn triggered the

main ball gap, allowing the pulse line to discharge across the washer stack. The plasma, apparently led by the electrons, moved down the tube, along the magnetic field, into the region of the exit slit. For purposes of extraction, the source and its associated equipment were made positive, and the extractor electrode was grounded.

The analysis of the products of the ion source was carried out in a 180° mass-spectrometer arrangement, as shown in Fig. 7. Ions were collected at the 180° focal point by means of a traveling Faraday cup, or could be observed by means of a phosphored screen which could be lowered to intercept the beam.

The serious beam spreading brought about by space-charge forces in the beam, after it has passed the extractor, must be largely eliminated in order to provide focused images. Although in a dc isotope separator the time required to neutralize the space charge is not of great importance, for pulsed ion beams time is of major concern, as neutralization has to be established for each ion pulse in a time much shorter than the pulse duration.

This problem was satisfactorily handled by the installation of beam-neutralizing plates. Before these plates were installed, the beam was diverged parallel to the magnetic field by space-charge forces to such an extent that only a small fraction could be collected. The plates, made of aluminum, were positioned in such a way that some of the ions, particularly before the beam was neutralized, struck the surfaces at grazing incidence and released secondary electrons. These electrons were effectively trapped by the magnetic field and served to neutralize the Coulomb forces within the beam.

With this method, evidence of good space-charge neutralization was observed with residual gas pressures as low as 3×10^{-7}. This pressure represented the base of the vacuum system used, and all work done was at or very near this pressure. It was later observed that adequate space-charge neutralization would be obtained even after the lower aluminum surface had been removed, indicating that sufficient electrons were being produced from the upper surface alone to neutralize the beam present.

For the data taken (Fig. 8) definition was not stressed, and the collimating slit for the Faraday cup was made 1/2 inch wide. The abscissa for each chart represents the cup's position as it was moved, one full slit width at a time, through approximately 10 inches.

The upper chart, taken at 10 kv extraction potential, covers the spectrum from mass 1 through approximately mass 16. In order to extend the coverage to mass 48, or singly ionized titanium ions, the extraction potential was lowered to

3.4 kv. Under these conditions, deuterium was present at the maximum travel of the Faraday cup and singly ionized titanium at the minimum.

These spectra show that when the source was operated in a magnetic field its high-mass output did not represent a serious contamination. Hydrogen isotopes represent more than 80% of the ion output of the deuterium-loaded source. Perhaps of more concern than the high-mass output was the rather substantial amount of protons present in the spectrum. As the vacuum was obtained by the use of an inadequately trapped oil diffusion pump, it is possible that some of the proton output was the result of hydrogen liberated from the oil vapor. However, it could conceivably have been the result of inadequate degassing of the titanium washers. If this latter is the case the use of vacuum-processed metal, in which considerably less hydrogen is initially present, than in the commercial grade, may result in a decrease in the proton level, with a corresponding increase in the deuterium fraction.

With the rather large amount of protons present, it was impossible to gauge the ratio of atomic to molecular ions from the deuterium spectrum, as the mass-2 peak included molecular hydrogen ions as well as atomic deuterium. For this reason, the operation of the source with ordinary hydrogen-loaded washers was tried.

The spectrum shown in Fig. 9, which was thoroughly representative of the several taken, revealed that the ratio of protons to molecular ions was higher than 90%. The results obtained with the source operating in a magnetic field were considerably better, both with respect to the ratio of atomic- to molecular-ion output and to the level of high-mass output, than for no-field operation.

Figure 10 is an exploded view of one of the geometries tested. With this model, a single support mounted the source as well as the extractor. The assembly was coaxial, with the shielded quartz ring serving as the high-voltage insulator as well as the extractor mount. The ion output was monitored by a carbon cup, which completely surrounded the extractor. In order to increase the extracting area, this unit incorporated three parallel extracting slits.

The data in Fig. 11 were indicative of the type of outputs obtained. This is the measured output of a two-slit geometry in which the extraction potential was extended to 20 kv. The solid line represented the output of the source after 1 hour of operation or after nearly 1800 pulses. The output of 400 ma at the 20-kv point represented very nearly a space-charge-limited condition for the geometry used. In relation to slit area, this was the equivalent of 7.2 amperes per square inch.

The operation of the source was continued for 11 hours, and it is interesting to note the drop in the output measured at the end of this time. This is a decrease of some 20% in level at the 20-kv point after approximately 20,000 pulses. This apparent decrease in plasma density may well indicate a decreased availability of the occluded gas with time. Some variation in current output was generally observed, as well, from one pulse to the next. Again this could indicate that the amount of occluded gas liberated during any one discharge is not necessarily a constant. The ion output was also dependent on the level of the magnetic field. Reproducible decreases in output of 30% have been observed upon lowering of the magnetic field from 4 to 2 kilogauss. The magnetic field used for these investigations had an upper limit of 4.5 kilogauss, and all data taken were at or very near this limit. The effect on ion output of magnetic fields greater than this is not yet known.

This work was done under the auspices of the U. S. Atomic Energy Commission.

References

1. L. Ruby and J. D. Gow, Bull. Am. Phys. Soc. 30, 63 (1955).
2. Crawford, Gow, Pon, and Ruby, An Occluded-Gas Ion Source, UCRL-3103, Aug. 1955.
3. K. W. Ehlers, Occluded-Gas Ion Source, UCRL-3453, June 1956.
4. James D. Gow, The Development of a Sealed-Off Pulsed Neutron Source, to be submitted to the Review of Scientific Instruments.
5. James D. Gow and John S. Foster, Jr., A High Intensity Pulsed Ion Source, UCRL-1698, March 1952.
6. D. P. Smith, Hydrogen in Metals (University of Chicago Press, 1948).
7. A. R. Ubbelohde, Some Properties of the Metallic State, Proc. Roy. Soc. A159, 295 (1937).
8. R. G. Stansfield, A Search for Ionisation of Hydrogen by Diffusion through Palladium, Proc. Cambridge Phil. Soc. 34, 120 (1938).
9. P. A. Silberg and C. H. Bachman, Some Studies of the Diffusion of Hydrogen through Palladium, NP-5223, June 1954.
10. C. H. Bachman (Syracuse Univ.), Private Communication dated October 11, 1954.
11. T. Franzini, Sul Funzionamento di un Tube a Protoni, Atti Accad. Nazl. Lincei 27, 292 (1938).
12. B. Duhm, Die Diffusion des Wasserstoffs im Palladium, Z. Physik 94, 434 (1935).
13. W. H. Bostick, Phys. Rev. 106, 404 (1957).

Legends

Fig. 1. Filament-type ion source.

Fig. 2. Ion source for axial extraction.

Fig. 3. Ion source for axial extraction.

Fig. 4. Focusing geometry and mass-analysis geometry.

Fig. 5. Mass analysis of source output obtained with axial extraction.

Fig. 6. Block diagram of equipment used for operating source in magnetic field.

Fig. 7. Arrangement of mass spectrometer.

Fig. 8. Spectrum from deuterium-loaded source.

Upper: extraction potential, 10 kv; field, 4000 gauss

Lower: 3.4 kv, 4000 gauss.

Fig. 9. Spectrum from hydrogen-loaded source. Extraction potential, 10 kv; field, 4000 gauss.

Fig. 10. Exploded view of occluded-gas ion source and extractor unit.

Fig. 11. Ion current as a function of extraction potential.

Curve A: output after 1 hr of operation, 7.2 amp/in.^{2} at 20 kv.

Curve B: output after 11 hr of operation, 5.85 amp/in.^{2} at 20 kv.

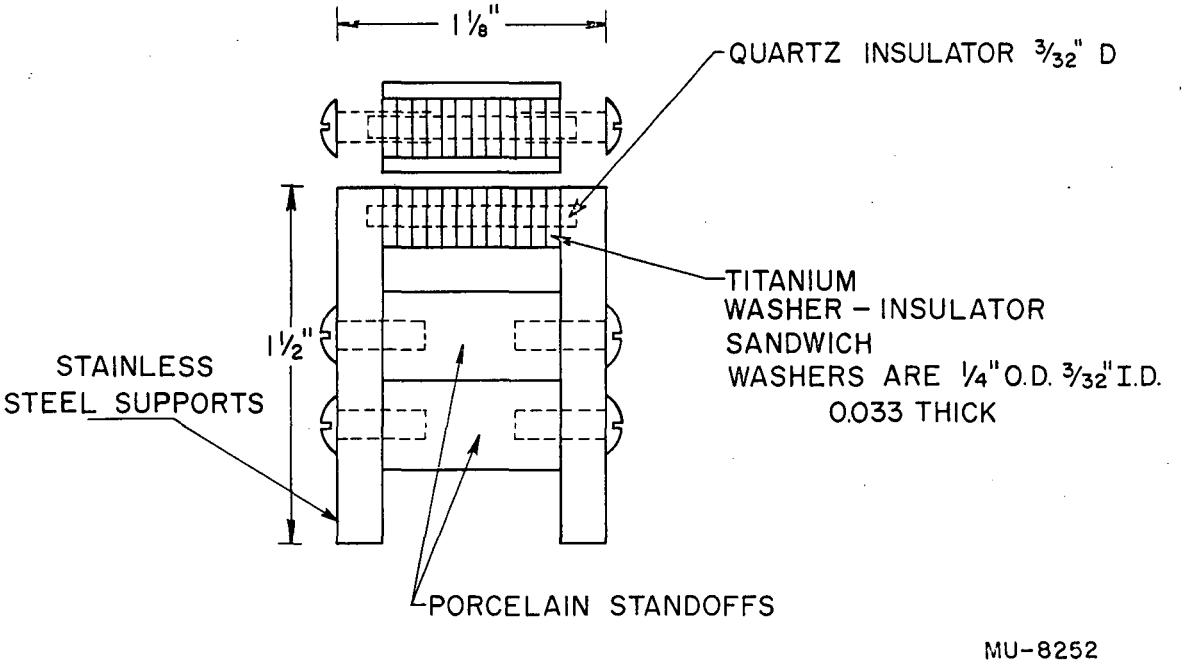
1 1/8"
QUARTZ INSULATOR 3/32" D
TITANIUM
WASHER – INSULATOR
SANDWICH
WASHERS ARE 1/4" O.D. 3/32" I.D.
0.033 THICK
1 1/2"
STAINLESS
STEEL SUPPORTS
PORCELAIN STANDOFFS
MU-8252

Fig. 1.

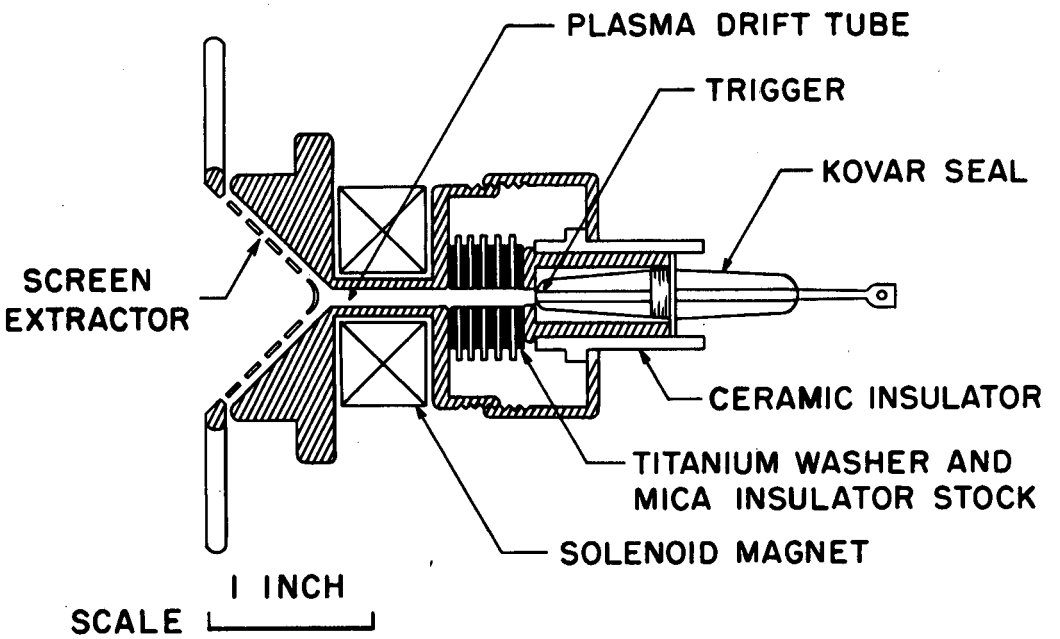

MU-14765

Fig. 2.

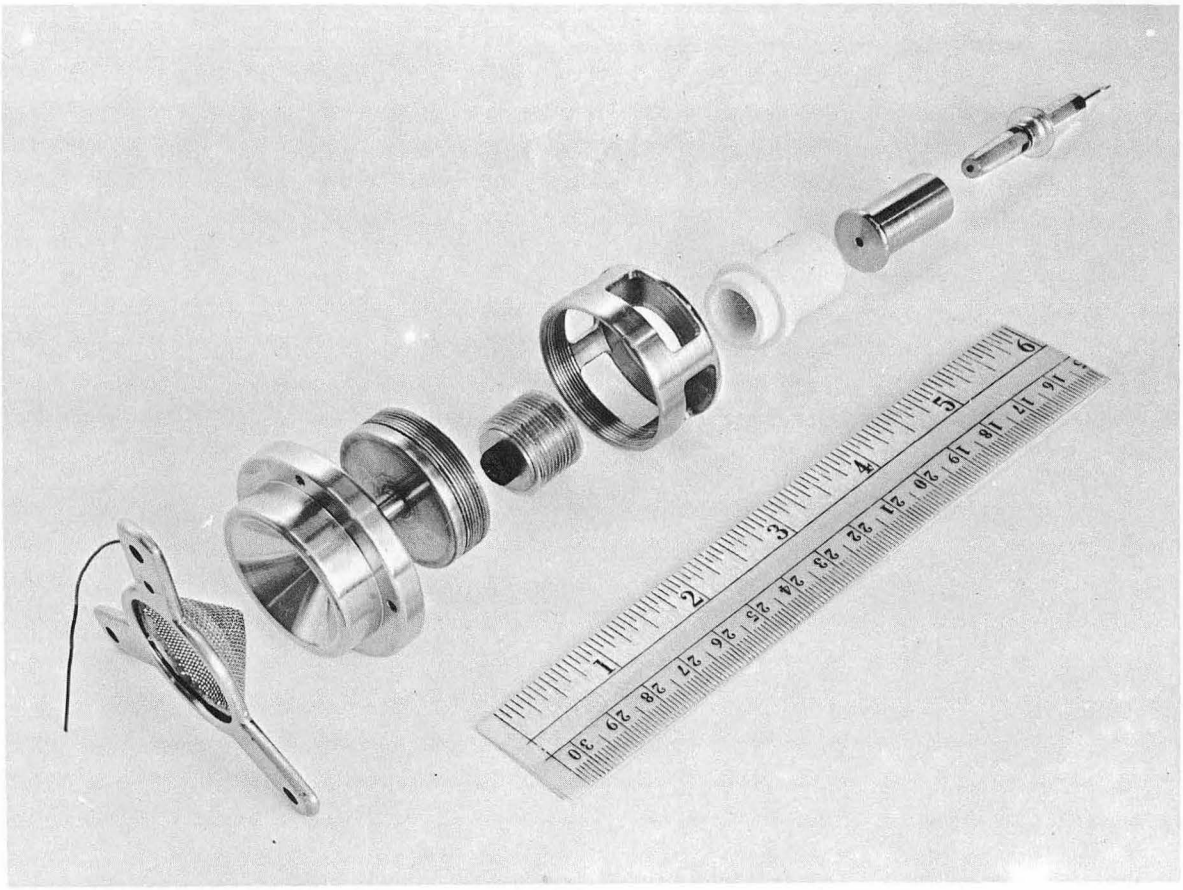

ZN-1896

Fig. 3.

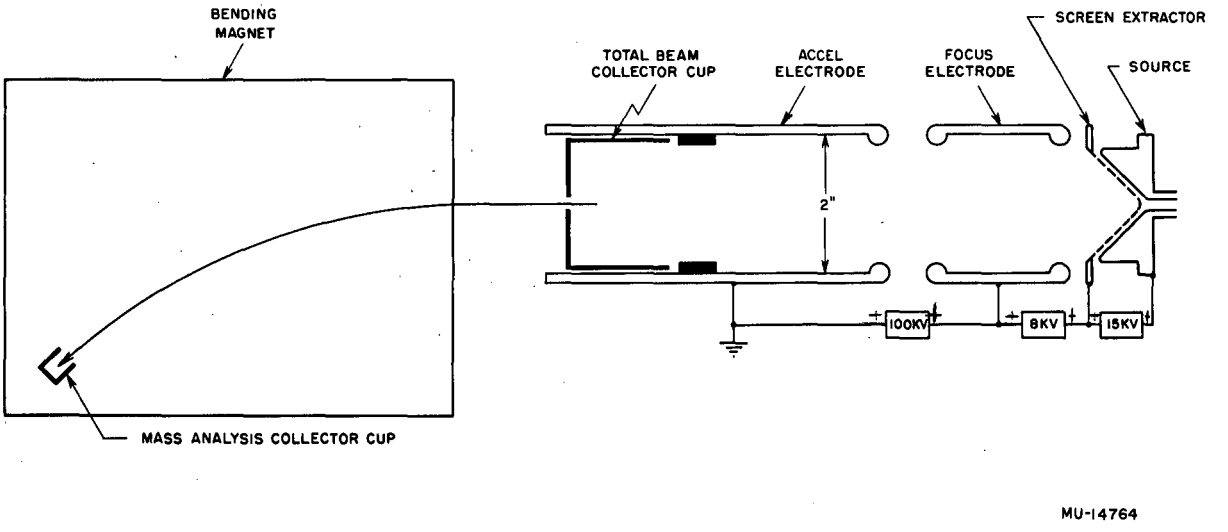
BENDING MAGNET
TOTAL BEAM COLLECTOR CUP
ACCEL ELECTRODE
FOCUS ELECTRODE
SCREEN EXTRACTOR
SOURCE
2"
100KV
8KV
15KV
MASS ANALYSIS COLLECTOR CUP
MU-14764

Fig. 4.

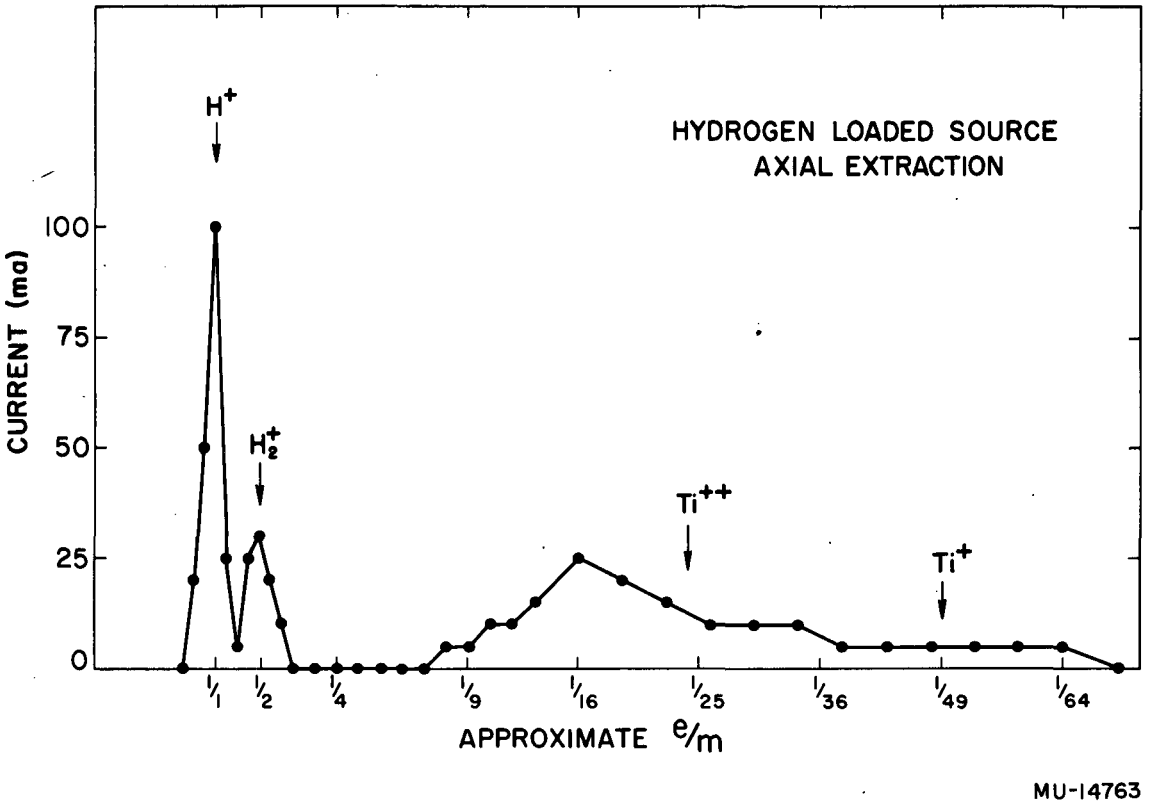
HYDROGEN LOADED SOURCE
AXIAL EXTRACTION
H+
H2+
Ti++
Ti+
CURRENT (ma)
100
75
50
25
0
1/1
1/2
1/4
1/9
1/16
1/25
1/36
1/49
1/64
APPROXIMATE e/m
MU-14763

Fig. 5.

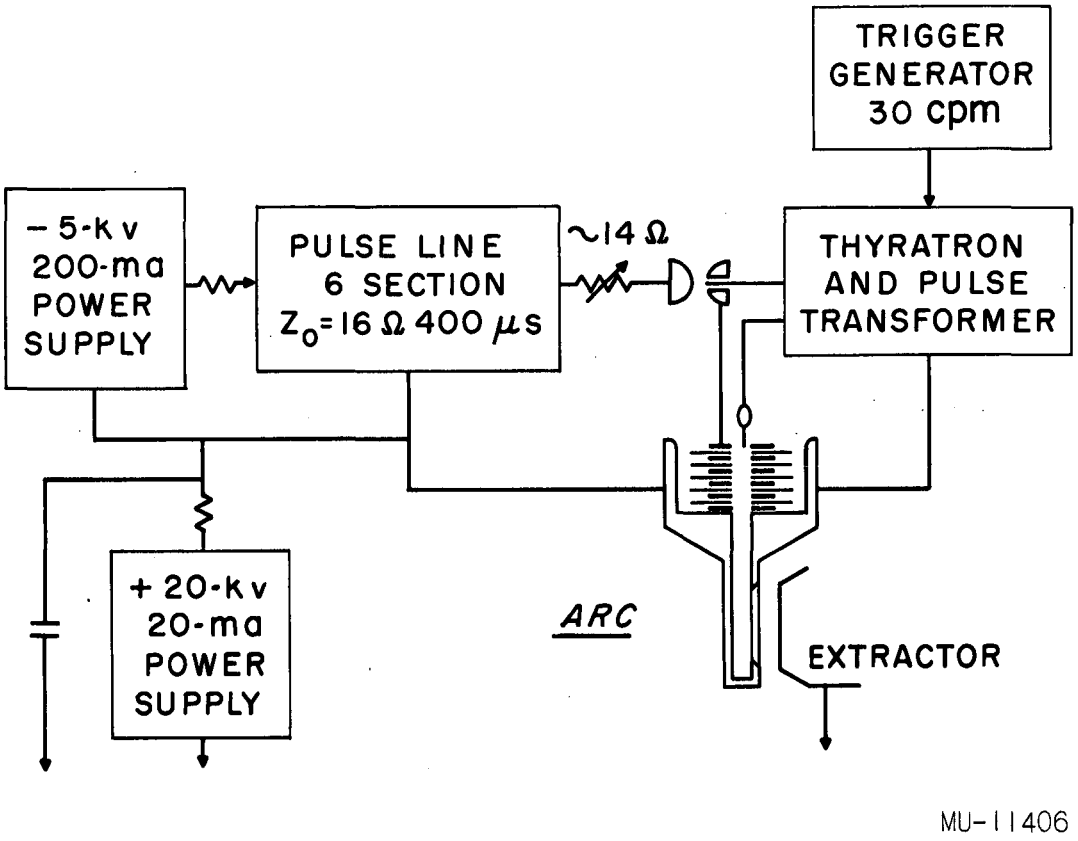
TRIGGER GENERATOR 30 cpm
- 5-kv 200-ma POWER SUPPLY
PULSE LINE 6 SECTION Z_0=16 Ω 400 μs
~14 Ω
THYRATRON AND PULSE TRANSFORMER
+ 20-kv 20-ma POWER SUPPLY
ARC
EXTRACTOR
MU-11406

Fig. 6.

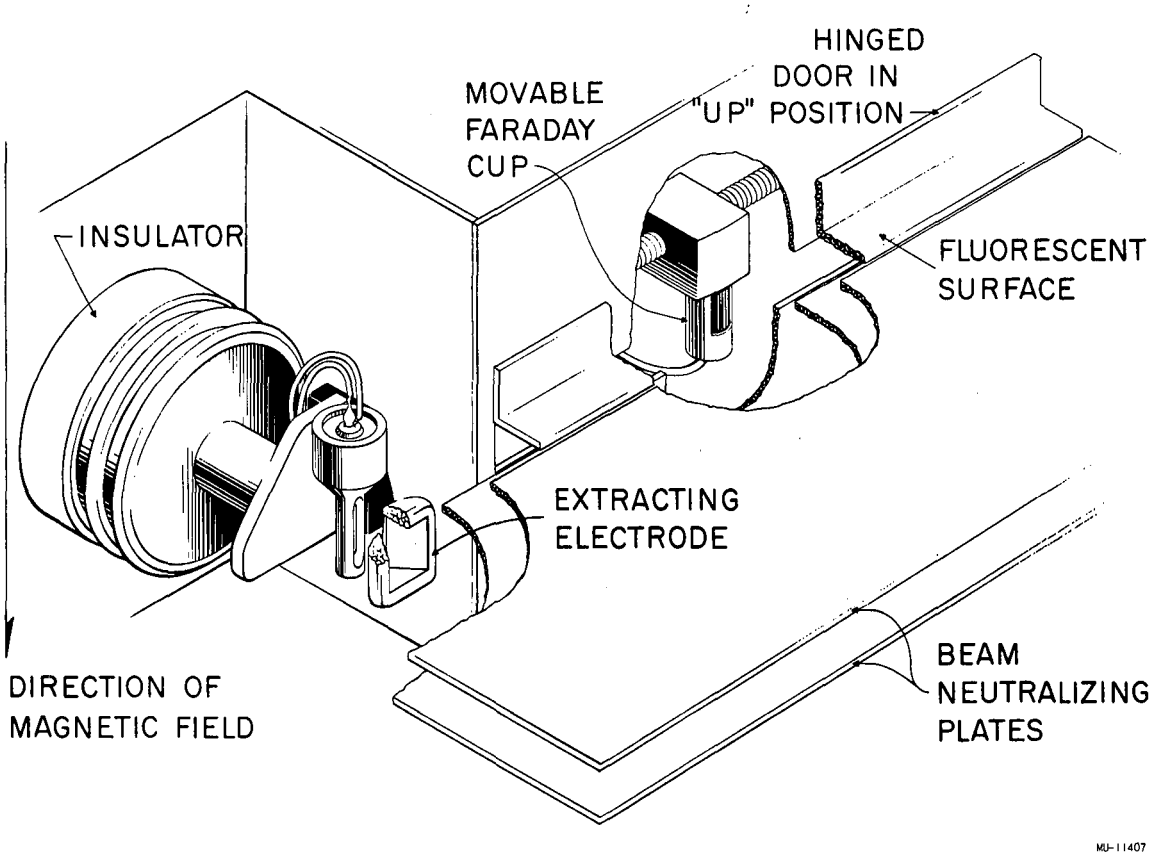
HINGED
DOOR IN
"UP" POSITION
MOVABLE
FARADAY
CUP
INSULATOR
FLUORESCENT
SURFACE
EXTRACTING
ELECTRODE
DIRECTION OF
MAGNETIC FIELD
BEAM
NEUTRALIZING
PLATES
MU-11407

Fig. 7.

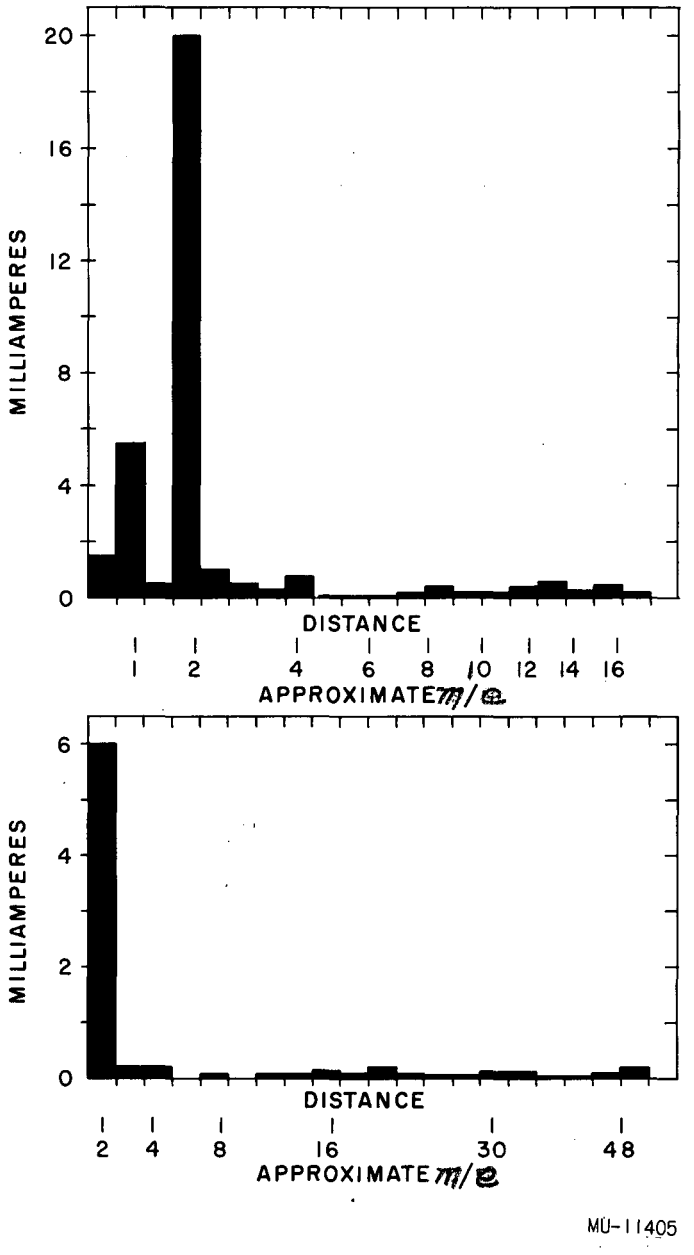
20
16
12
8
4
0
MILLIAMPERES
DISTANCE
1
2
4
6
8
10
12
14
16
APPROXIMATE m/e
6
4
2
0
MILLIAMPERES
DISTANCE
2
4
8
16
30
48
APPROXIMATE m/e
MU-11405

Fig. 8.

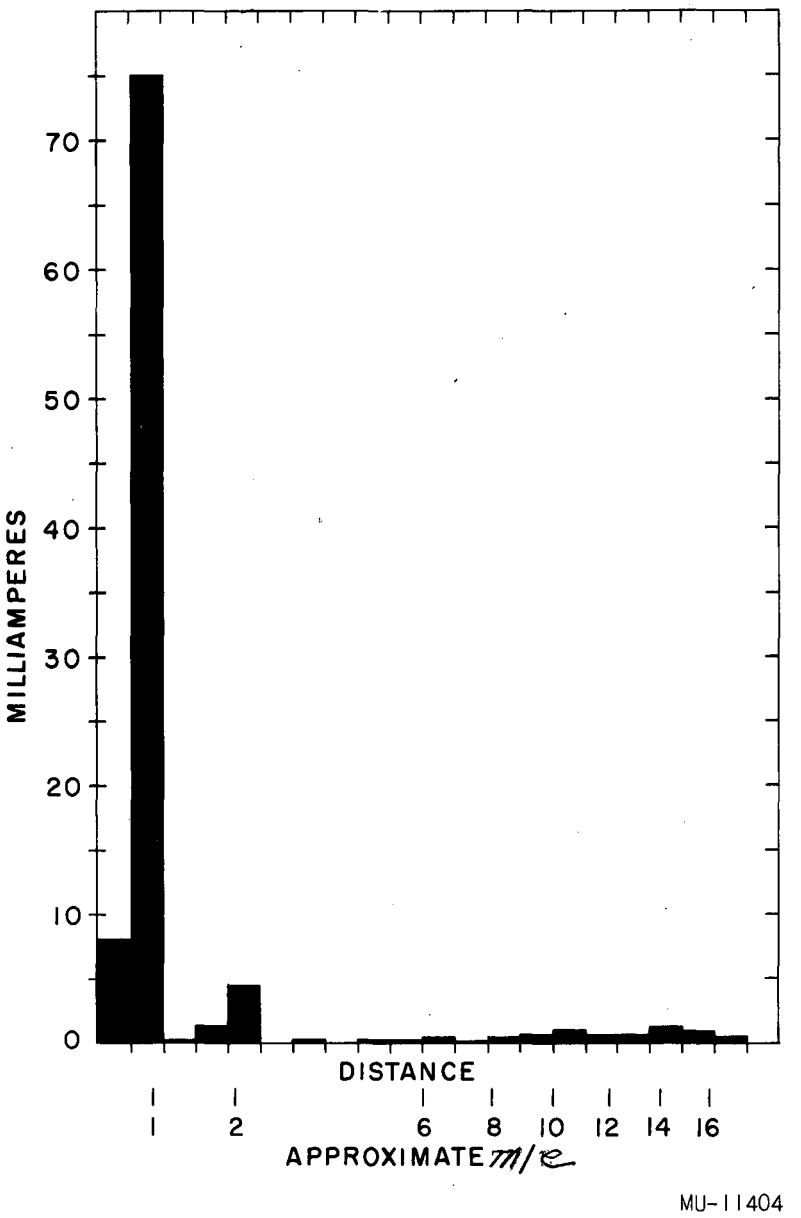
70
60
50
40
30
20
10
0
MILLIAMPERES
DISTANCE
1
2
6
8
10
12
14
16
APPROXIMATE m/e
MU-11404

Fig. 9.

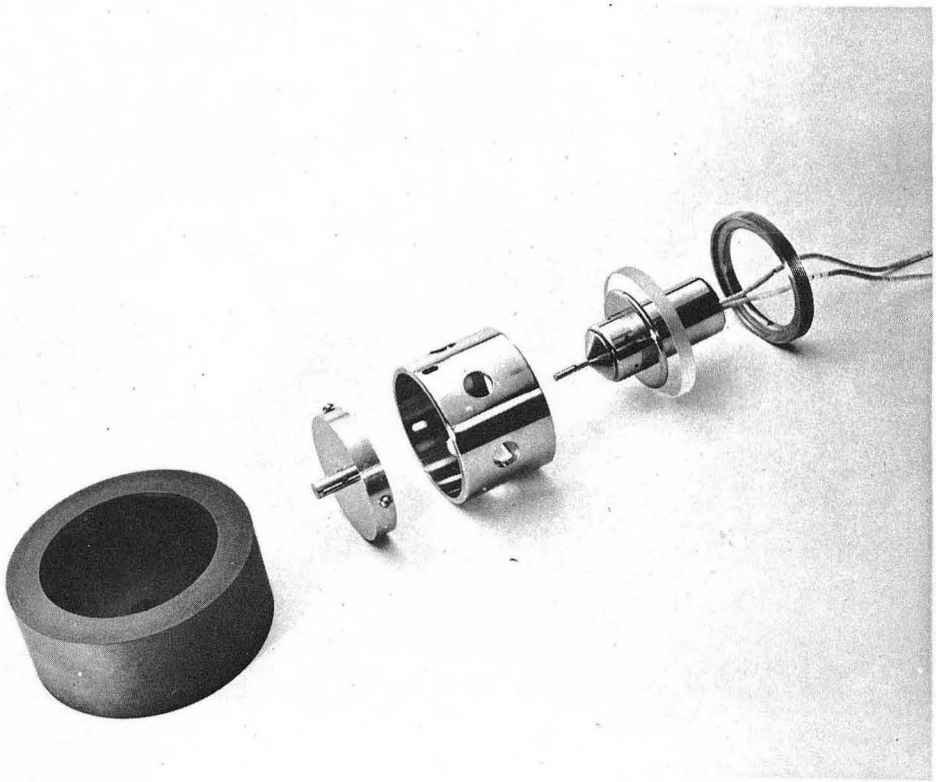

ZN-1542

Fig. 10.

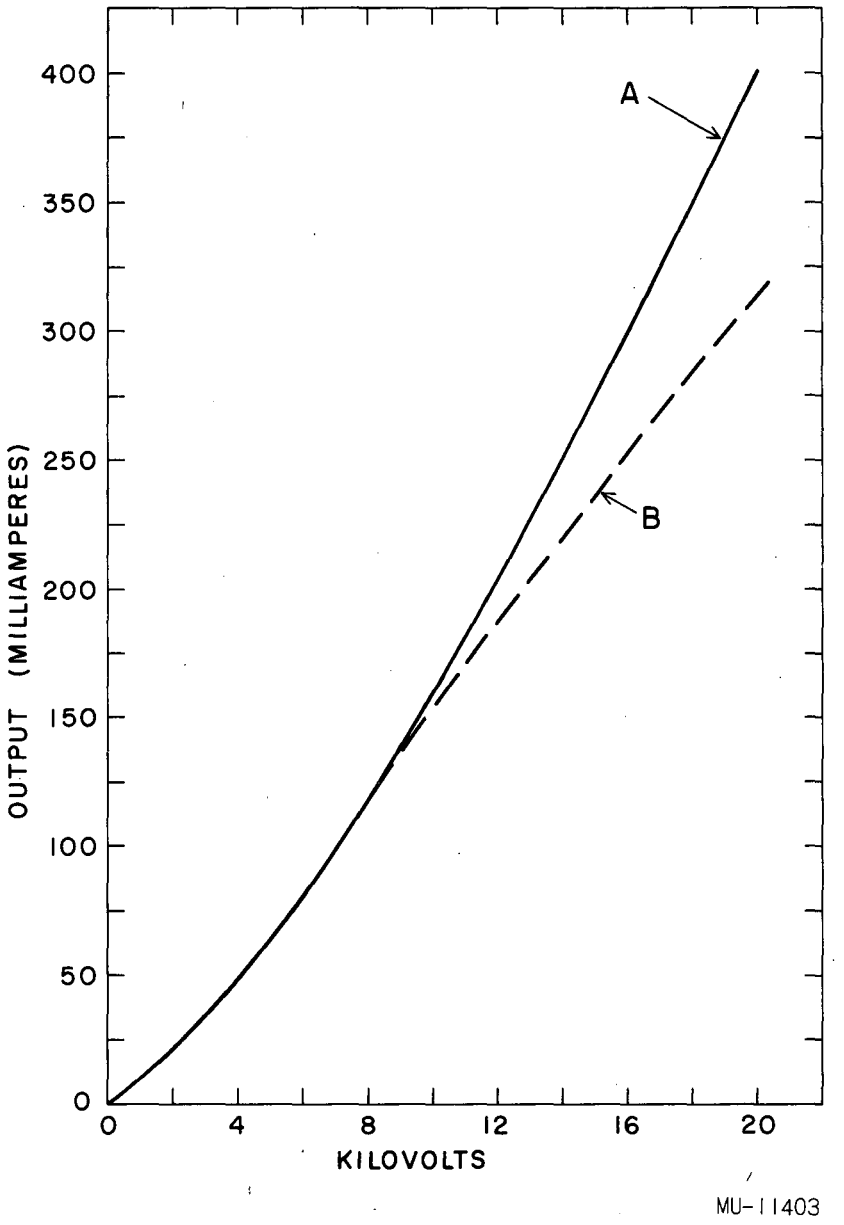
400
350
300
250
200
150
100
50
0
OUTPUT (MILLIAMPERES)
0
4
8
12
16
20
KILOVOLTS
A
B
MU-11403

Fig. 11.