UCRL 8281

UNIVERSITY OF CALIFORNIA

Radiation Laboratory

PHYSICS DIVISION SEMIANNUAL REPORT
November 1957 through April 1958

TWO-WEEK LOAN COPY

This is a Library Circulating Copy which may be borrowed for two weeks. For a personal retention copy, call Tech. Info. Division, Ext. 5545

DISCLAIMER

This document was prepared as an account of work sponsored by the United States Government. While this document is believed to contain correct information, neither the United States Government nor any agency thereof, nor the Regents of the University of California, nor any of their employees, makes any warranty, express or implied, or assumes any legal responsibility for the accuracy, completeness, or usefulness of any information, apparatus, product, or process disclosed, or represents that its use would not infringe privately owned rights. Reference herein to any specific commercial product, process, or service by its trade name, trademark, manufacturer, or otherwise, does not necessarily constitute or imply its endorsement, recommendation, or favoring by the United States Government or any agency thereof, or the Regents of the University of California. The views and opinions of authors expressed herein do not necessarily state or reflect those of the United States Government or any agency thereof or the Regents of the University of California.

UCRL-8281
Physics and Mathematics

UNIVERSITY OF CALIFORNIA
Radiation Laboratory
Berkeley, California

Contract No. W-7405-eng-48

(Development and Progress Report)

PHYSICS DIVISION SEMIANNUAL REPORT
November 1957 through April 1958

May 29, 1958

Some of the results reported in this document may be of a preliminary or incomplete nature. The Radiation Laboratory requests that the document not be quoted without consultation with the author or the Information Division.

Printed for the U. S. Atomic Energy Commission

This report was prepared as an account of Government sponsored work. Neither the United States, nor the Commission, nor any person acting on behalf of the Commission:

A. Makes any warranty or representation, express or implied, with respect to the accuracy, completeness, or usefulness of the information contained in this report, or that the use of any information, apparatus, method, or process disclosed in this report may not infringe privately owned rights; or

B. Assumes any liabilities with respect to the use of, or for damages resulting from the use of any information, apparatus, method, or process disclosed in this report.

As used in the above, "person acting on behalf of the Commission" includes any employee or contractor of the Commission to the extent that such employee or contractor prepares, handles or distributes, or provides access to, any information pursuant to his employment or contract with the Commission.

PHYSICS DIVISION SEMIANNUAL REPORT

November 1957 through April 1958

Contents

GENERAL PHYSICS RESEARCH

Physics Research: Alvarez

Liquid Hydrogen Bubble Chambers
Operation and Development 5
Optics and Data Reduction 7
Results of Experiments Performed with Hydrogen Chambers . . 7
Associated Production of Strange Particles 7
Stopping Antiprotons 8
π-$\bar{p}$ Scattering 8

Physics Research: Barkas

Hyperon and K^--Meson Research
Decay of K^- Mesons 9
Asymmetry in Σ-Hyperon Decay 9
Decay and Interaction of Charged Hyperons 10
Study of Λ Hyperons 10

Separated K^- Beams
Degrader Type 11
Velocity Selector 12

Work with 30-Inch Propane Chamber
Minor Decay Modes of K^+ Mesons 12

Heavy-Ion Research 12

Decay of the Positive Muon 13

Beta Decay of Lithium-8, Beryllium-8, Boron-12, and Nitrogen-12 13

Physics Research: Birge

Charge Exchange of K^+ Mesons 14

Interactions of 5.5-Bev/c π^- Mesons in Propane 15

The Scattering of K^+ Mesons by Protons 15

Physics Research: Bradner

Search for Dirac Monopoles 16

*Proceding Reports: UCRL-8054, UCRL-3914

Physics Research: Helmholz

Photopion Physics 17

Electromagnetic Effects 17

Scattering Studies 18

Theoretical Group: Judd

Nuclear Reactions 19

Structure of the Nucleon and Nuclear Structure 20

Antinucleons 21

Atomic and Molecular Physics 22

Particle Classifications, Decay Schemes, and Related Topics . . 23

μ Mesons 25

Miscellaneous 25

Reduction of Data from Bubble Chambers 26

Other Activities of the Mathematicians 27

Physics Research: Lofgren

450-Mev/c K^- and Antiproton Beams at the Bevatron Northwest Target Area Separated by the Coaxial Velocity Spectrometer 31

Antiproton Cross Sections 34

Σ-Hyperon Asymmetry Experiments 35

Exploration of Methods to Detect Λ^0 Production at an Internal Target of the Bevatron 35

High-Momentum Antinucleon Experiment 36

The Study of K^+ Mesons in the Propane Bubble Chamber . . . 38

Search for a Particle of Mass 450 m_e to 650 m_e 38

Physics Research: Moyer

Neutron Spectrum, Angular Dependence, and Yield from 31.5-Mev Bombardment of Selected Targets 40

Photon Energy Selector 40

Cosmic-Ray Neutron Experiment 41

Neutron Cross-Section Measurements at the Bevatron 41

Nuclear Excitation from μ-Meson Capture in Medium and Heavy Nuclei 41

K^0-Meson Problem 42
Search for H^5 42
Antineutron Experiment 43

Cloud Chamber Studies: Powell 44

Physics Research: Segrè . . . . . .
Antinucleon Experiments. 45
Experiments at the Cyclotron 47
Beam-Profile Indicator 50
Study of Antiprotons in Nuclear Emulsions 50
The Interaction of K^+ Mesons with Hydrogen and Carbon . . . 51
Publications In Cooperation With Other Groups 51

Arc Research: Van Atta 52

ACCELERATOR OPERATION AND DEVELOPMENT

Bevatron 53
184-Inch Cyclotron 53
Range-Changing Capacitor 53
Beam Plugs 54
Focusing Magnet 55
60-Inch Cyclotron
Probe-Oscillating Mechanism 56
Vacuum-Gate Mechanism 56
Air-Driven Water Door 59
Radiation and Beam vs Magnet Resonance 59
Operations Summary 61
Heavy-Ion Linear Accelerator
Development and Operation 65
Linear Accelerator 65
Synchrotron 66

PHYSICS DIVISION SEMIANNUAL REPORT

November 1957 through April 1958

Radiation Laboratory
University of California
Berkeley, California

May 29, 1958

GENERAL PHYSICS RESEARCH

PHYSICS RESEARCH

Luis W. Alvarez in charge

LIQUID HYDROGEN BUBBLE CHAMBERS

Operation and Development

James Donald Gow

4-Inch Chamber

During this report period the 4-inch chamber was prepared for operation at the 300-Mev synchrotron. This involved the reinstallation of the pulsed magnetic field coils and the rebuilding of the pulsed magnet power supply along with a general cleanup of the chamber and its instrumentation. Test runs at the synchrotron began during March and continued through April. Operation has been carried out with both hydrogen and deuterium.

10-Inch Chamber

The 1.1- to 1.2-Bev π^--proton strange-particle production experiment with the 10-inch chamber was completed late in December. Upon completion of this run the chamber was removed from the magnet and put into storage. During the working life of this instrument, more than 600,000 pictures were taken in the course of fifteen runs at the Bevatron.

15-Inch Chamber

The 15-inch chamber was assembled for hydrogen operation during the month of November. The hydrogen test run was started at the Bevatron December 1 and continued for 2 weeks. This test was run without a magnet. The retrodirective illumination system based on long curved cylindrical lenses was installed. The illumination was acceptable, but the periodic variations in light intensity encountered were somewhat annoying.

The hydrogen consumption was higher than originally planned; it was some 40 to 50 liters per hour at 10 pulses per minute. (This was cured later; see below.) The variable heat leaks operated as designed. All components of the expansion and recompression system proved satisfactory. The time required to reduce the chamber pressure from 70 psig to 35 psig was 5 milliseconds. Recompression was equally rapid.

Extensive exploration of operating parameters was carried out, including operation above the pressures expected for deuterium operation. Measurements on long tracks indicated a random curvature (long-wave-length turbulence) consistent with that expected from Coulomb scattering. The new illumination system permitted photography with a light delay as short as 0.5 msec. Measurement indicated little or no vertical temperature gradient.

During January the 15-inch chamber was installed in the magnet formerly used for the 10-inch chamber; the necessary magnet and control-system modifications required 6 weeks.

In late February the first research run began, an experiment using a separated K^- beam designed to extend our previous work on K^- interactions in hydrogen at rest and also to include K^- interactions in flight. Operation with both hydrogen and deuterium was planned. During the course of this run a better balance of the variable heat leaks was obtained, which reduced the hydrogen consumption by a factor of two. This improved balance was apparently due to lowering the temperature of the expansion region, with a consequent reduction of boiling during the expanded phase.

Operation with deuterium was attempted. Unfortunately, owing to an error on the part of the supplier, the deuterium contained excessive tritium and the fog of droplets due to β decay of the T made useful operation impossible. However, tracks were observed and the operation was successful as far as the chamber was concerned. For satisfactory results a T concentration of less than 1 part in 3×10^{12} is required. The material supplied had a T concentration of 1 in 5.3×10^{10}.

During this run at 10 pulses per minute, severe short-wave-length optical distortions were observed. These were traced to the existence of a thin hot layer of liquid hydrogen lying against the glass surface. At 3 pulses/min the layer flowed up the tilted glass and was removed by cooling on contact with the wall. Turbulence was also noted in the region of the expansion port, in which $\frac{1}{2}$-inch holes were distributed over about one-eight of the chamber wall area.

The run was terminated to permit installation of an expansion-port plate with 1/8-inch holes. A set of small tubes was installed extending downward from the highest point under the window into the expansion line. A check-valve mechanism is inserted between the tubes and the expansion line. This causes the removal of a small amount of liquid on each pulse, which results in a very slow but positive flow of hydrogen along the glass. Preliminary evidence indicates that this installation has removed the hot layer.

In subsequent running a smaller but still annoying short-wave-length turbulence was noted. This is believed to be due to the flow of warm hydrogen upward through the gaps in the illumination assembly. Steps will be taken to eliminate this residual turbulence.

Although annoying, none of the effects mentioned was so bad as to destroy the usefulness of the instrument. Some 50,000 pictures have been taken during K^--stopping and antiproton-stopping experiments. About 100 $\bar{p}$ interactions have been observed.

72-Inch Chamber

The 72-inch chamber assembly proceeded as scheduled. The refrigerator was received from Beech Aircraft Company and tested at the National Bureau of Standards Cryogenic Engineering Laboratory. Its performance was satisfactory in all respects. The compressor installation was made as well as the 3-Mw generator installation.

The bubble chamber building was completed in March and the large amount of work necessary to equip the building for operations is being done.

Test operation of the large chamber with liquid nitrogen is scheduled for June, and hydrogen operation in late summer is contemplated. The 15-inch chamber has provided very valuable scaling information, and data from the smaller instrument have materially influenced the design of internal parts of the 72-inch chamber. Fortunately, it was possible to delay the fabrication of such parts as the expansion plates and optical system until the test data were available.

Optics and Data Reduction

Hugh Bradner

Data are being reduced on a routine schedule, with the existing equipment. Copies of the "Franckenstein" measuring projector are being made for the Geneva "Atoms for Peace" exhibit and for Wilson Powell's bubble chamber group. Construction of the measuring projector for the 72-inch chamber has been delayed for budgetary reasons, but will be continued as rapidly as money is available.

Results of Experiments Performed With Hydrogen Chambers

Luis W. Alvarez and group

A. Associated Production of Strange Particles

From June until December 1957 the 10-inch liquid hydrogen bubble chamber was operated in a beam of negative pions of momentum 940 to 1250 Mev/c, in a study of associated production of strange particles and their subsequent decay. An unexpectedly large up-down asymmetry was observed in Λ decay. (This fact establishes that maximum parity non-conservation occurs; it also indicates that the spin of Λ is low, probably $\frac{1}{2}$. A "resonance" was observed in the excitation function for Λ.) A precise value of the mass of Σ^0 was obtained. Direct evidence was found that the K^0 can act as a particle with both plus and minus strangeness, as predicted

by Gell-Mann. Cross sections for the interaction with hydrogen of Λ, Σ, and $\bar{K}$ were measured. At the end of the associated production run the 10-inch chamber was shelved in favor of the 15-inch.

15-Inch Chamber and Bevatron

The first engineering run of the 15-inch chamber took place in a 700-Mev/c π^- beam at the Bevatron in December. The months of December, January, February, and March were used in making short runs with the chamber, separated by intervals for modification in the chamber directed at improving the lighting and reducing turbulence and optical distortion induced by nonuniform temperature distribution within the hydrogen.

The chamber was tried out again in February in a K^- beam. The beam, designed in cooperation with Drs. Nahmin Horwitz and Joseph J. Murray, was highly successful, and is described in Dr. Lofgren's report. The bubble chamber needed further modification.

B. Stopping Antiprotons

The chamber was used in March and April to stop antiprotons and K^- mesons. It was also demonstrated that the chamber will operate on deuterium. The K^- data are not yet analyzed.

With a rejection ratio of 650 for π^- mesons entering the spectrometer, one stopping $\bar{p}$ was observed for each 4000 minimum-ionizing tracks traversing the chamber. Also 83 $\bar{p}$ annihilations have been observed in which two or more π mesons were emitted. In one case, two π mesons plus two K^0 mesons were emitted, with both K^0 mesons decaying in the chamber via the θ_1 mode. In addition, four large-angle elastic scattering events have been identified.

In order to arrive at the correct distribution of multiplicities, criteria have been established to distinguish between antiprotons decaying into neutral modes and recoil protons traveling backwards and out of the chamber. It has also proved possible--by momentum measurement of the first and second halves of a given $\bar{p}$--to decide whether or not the interaction occurred at rest. Correlations of angles with momenta are being measured, also energy-momentum unbalances.

C. π-p Scattering

An investigation of π-p interactions not involving strange particles (predominantly elastic and single-pion-production reactions) was undertaken as a by-product of the associated production run. L. Baggett and B. H. McCormick have measured 1800 events, 600 at each of three basic beam momenta of the associated production run, namely 0.938, 1.12, and 1.24 Bev/c. Ninety percent of the 0.938 Bev/c data has been reduced to date.

PHYSICS RESEARCH

Walter H. Barkas in charge

HYPERON AND K^--MESON RESEARCH

Walter H. Barkas, John Dyer, Harry H. Heckman, Conrad Mason, Norris Nickols, and Frances M. Smith

Decay of K^- Mesons

Work is continuing on the analysis of K^--meson decay modes and the evaluation of the K^- lifetime. To date, approximately 70 decays have been found in the 1U and 2B stacks. Of those so far analyzed, eleven decayed into μ mesons, eight into π's, and one into an electron. The best value for the lifetime is $1.21 \pm 0.18 \times 10^{-8}$ sec.

In order to facilitate the analysis of the decay events an ionization computer for tracks in emulsion is being built. A microscope having a constant-speed drive on the x movement of the stage and a plate rotator to align the track with the x movement is nearing completion.

An improved stack-alignment system has also been devised and a two-microscope alignment jig built. Initial functioning of this device has been good.

Asymmetry in Σ-Hyperon Decay

Work is continuing on the study of parity nonconservation in the decay of the Σ hyperons. In this study only two-prong stars from K^- interactions at rest, in which one prong is a decaying Σ and the other a π meson, are used. Collinear events are excluded, as the reaction must be with a bound proton in order to find a "production plane," which we here define as the Σ-π plane. The direction of the pion from the Σ decay is examined with respect to the Σ-π plane.

New events of the type $K^- + (p) \rightarrow \Sigma^{\pm} + \pi^{\pm}$, in which the Σ decays in flight or at rest, are being located in a stack that was exposed to a K^- beam last January.

The momenta of the Σ and its associated π meson are calculated from their ranges or grain-density gradient over a known path in emulsion. From these momenta and the observed angle between the Σ and the π, one can--using a simple model of the nucleus[1]--calculate the probable momenta and production angles of the Σ and π in the nucleus.

The IBM program for calculating the maximum-likelihood value of the coefficient α in the distribution function $1 + \alpha \cos \phi_i$ is being rewritten. The altered program will calculate the coefficient α in the distribution function $1 + \alpha \mathcal{E}_i \cos \phi_i$, where $\mathcal{E}_i$ is a function of the momentum and

[1] Gilbert, Violet, and White, Phys. Rev. 107, 228-238 (1957); also R. H. Capps, Phys. Rev. 107, 239-248 (1957).

production angle of the Σ hyperon in the nucleus. In both cases the ϕ_i are the angles between the normal to the production planes and the direction of the decay pions from the Σ's.

Decay and Interaction of Charged Hyperons

Other studies of the charged hyperons are continuing. Since our most recent publication on the masses and decay rates of these particles,[2] we have increased the number of such events available for analysis to more than 200, or roughly twice the number available at the time of that publication. Analysis during this period has been directly concerned with decay modes in which the secondary particle is a track of minimum ionization. Thirty of 80 such events have been analyzed partially, and no evidence has been found for any minor (i. e., lepton) decay mode of the charged hyperon.

In addition to the above, we have more than doubled the number of K^- interactions with hydrogen by continued scanning of our 2B stack and scanning of our newer 2D stack, which is currently in progress. Eleven such events have been added and are now being analyzed. The 2D stack is expected to yield about five more events in the near future. Analysis of these events will yield improved values for the masses of the charged hyperons and K^- meson. The frequency distribution of the star prongs from Σ^- capture will also be determined because the results of such a study provide the only reliable method of estimating the number of negative hyperons, produced in K^- interactions, that make no star.

Study of Λ Hyperons

The Λ hyperon is currently being investigated; particular emphasis is being placed upon determining its mass, the Q value of its decay via the proton mode, and the energy distribution of these particles when produced by K^--meson interactions with emulsion nuclei.

In September 1957, results of the study thus far were published. However, at that time only 18 events were available to determine the above quantities. Work since that date has been directed towards finding more Λ hyperons. An additional volume of emulsion was scanned in the 2B stack, yielding 11 Λ-like events. Also, another stack was exposed (the 2D stack), and area scanning is now in progress. To date, 49 Λ-like events have been found in this stack.

Analysis of the Λ-like events is awaiting the completion of a device designed to speed this analysis. This device is a "digitized" microscope, i. e., a large-stage microscope equipped with Giannini disc encoders on

[2] Peter C. Giles, Masses and Decay Processes of Charged Hyperons (Thesis), UCRL-8007, October 1957.

the three scope axes, whose development has taken the last few months. The microscope will permit range measurements to be taken in a small fraction of the time now devoted to such measurements, and will prove useful in any research problem involving these measurements. Use is made of the IBM 650 data processing machine in conjunction with the above microscope, and the necessary program for calculating particle ranges from the measurements has been written.

A program for the IBM 650 has also been written to compute T, PC, β, γ, and range straggle, and ΔT, ΔPC, $\Delta\beta$, $\Delta\gamma$ due to range straggle, from the measured range in nuclear track emulsion by use of our range-energy tables.

SEPARATED K^- BEAMS

Degrader Type

Harry H. Heckman and Norris Nickols

From December 10, 1957 through December 20, 1957, a series of 23 emulsion stacks was exposed to a separated K^- beam in the northwest target area of the Bevatron. Approximately 15 separate research groups were participants in the exposure, nine of which were European and represented five different countries.

The 0° negative beam was generated by bombarding a $3\frac{1}{2}$-inch Cu target (72° 43' position) with 6.2-Bev protons. Upon its exit essentially radially from the Bevatron, the 420-Mev/c beam was reanalyzed by traversing a 12-by-24-in. C magnet to eliminate low-momentum components--i.e., electrons and muons--that were present in the beam. The beam was then degraded by passing it through 17 g/cm^2 of CH. The final momentum of the K^- mesons was 300 Mev/c, while the π^- mesons were degraded to only 380 Mev/c. The K mesons and π mesons were separated by a second momentum analysis. The Bevatron "H" magnet, 18 by 36-in. was used for this purpose.

At the stack position, the flux of K^- mesons was 30 to 40 K particles per cm^2 per 10^{13} protons on the target. The momentum gradient was 2 Mev/c per cm with a dispersion of ± 3 %. These characteristics allowed an emulsion stack to be nearly uniformly bombarded along its entrance edge (6 to 9-in.). The vertical height of the beam was ± 1-in. (at half maximum) from the median plane. A typical emulsion stack was exposed to a total of 2×10^4 K^- mesons, requiring about 10^{14} protons on the target. The ratio of minimum-background particles (principally μ mesons) to K particles in the beam was 530:1.

Velocity Selector

John N. Dyer

An emulsion stack (number 2D) consisting of 108 pellicles of 3-by-6-in. K. 5 emulsion, each 600μ thick, was exposed to 420-Mev/c K^- mesons which were selected by the Murray separator. The beam was directed along the longitudinal axis of the stack, providing a large concentration of stopping K^- mesons about 10 cm into the stack. Exposure lasted for 3×10^{14} protons on target, which placed approximately 3000 K^- mesons in the stack, with some 100 minimum-background tracks per K^- meson. The results of scanning to date in this stack are mentioned elsewhere in this report.

This exposure was made also for Dr. H. Taft of Yale University, who is now in possession of approximately one-half the pellicles. The remainder of the stack will be exchanged with Dr. Taft in the future, thus permitting us to extract information from the entire stack.

WORK WITH 30-INCH PROPANE CHAMBER

Minor Decay Modes of K^+ Mesons

Harry H. Heckman and Jack W. Patrick

In collaboration with Professor Wilson Powell's group, we are continuing our analysis of the K^+ decay modes. To date we have recorded more than 2000 events of decaying particles in a preliminary scanning program. We are now rescanning the film, making tentative classifications as to the type of decay, i.e., two-body decays or three-body decays. The momentum analysis of the secondaries has just been initiated and no quantitative data have been obtained thus far. The principal effort of this work will be in the study of the energy spectra of the positron and muons from the three-body modes of decay. Approximately 3 to 4% of all stopping K events lead to a measurable secondary from the $K\beta_3$ and $K\mu_3$ modes. The resolution of the separate modes of decay does not appear to be so good as hoped. Factors that contribute to the broadening of the resolution are multiple scattering and K^+ decays in flight (particularly those that decay near the ends of their ranges).

HEAVY-ION RESEARCH

Harry H. Heckman, Frances M. Smith, and Walter H. Barkas

Study of tracks of heavy ions in emulsion, with emphasis at this time on the range-energy relation, is continuing. The range-energy dependence is obtained from measurements made on elastic scatters of the ions on protons. From the range of the proton and the space angle between the proton and the scattered ion, one can calculate the energy of the scattered ion whose range is measurable.

Some results have been obtained for the ranges of oxygen and neon ions in emulsion between 5 and 95 Mev kinetic energy. The principal

limitations on the accuracy of the relationships are due to the scarcity of events in which both the ion and recoil proton remain in the emulsion.

A common feature of these range-energy curves is their approximate linearity for ranges greater than 5 or 10 microns--that is, the rate of energy loss is nearly a constant. This is corroborated in observing these ions in insensitive emulsions (Ilford, types K. 1 and K. 2) in which the grain density is constant within the accuracy of measurements taken thus far.

DECAY OF THE POSITIVE MUON

Walter F. Dudziak

The reduction of the experimental data on the positron spectrum from the decay of the muon has been completed. This has been summarized in a paper written during this period.[3] In this paper are reported three conclusions that are drawn from the data. These are (a) the mean lifetime of the positive muon, 2.210 ± 0.015 μsec; (b) the Michel parameter that describes the positron-decay spectrum, 0.734 ± 0.022; and (c) the maximum energy of the positron that arises from this decay, W = 52.87 ± 0.069 Mev. From W a value of the positive muon mass is estimated by assuming zero mass for the two neutrinos emitted in the decay process. The muon mass obtained from this measurement of W is $\mu = 206.94 \pm 0.27\ m_e$.

BETA DECAY OF LITHIUM-8, BERYLLIUM-8, BORON-12, AND NITROGEN-12

James Vedder

The data reduction of the beta-decay experiment performed at the 32-Mev proton linear accelerator with a spiral-orbit spectrometer has been completed. The energy spectra and lifetimes of Li^8, B^8, B^{12}, and N^{12} have been measured, and the main features of the activities are tabulated below.

Nuclide	Decay	Maximum Energy (Mev)	Q (Mev)	M-A (mmu)	$T_{1/2}$	log ft
$_3Li^8$	β^-	13.0[a]	15.94±.09	24.97±.10	0.87±.01 sec	5.67
$_5B^8$	β^+	14.0[a]	17.93±.12	27.11±.13	0.75±.02 sec	5.72
$_5B^{12}$	β^-	13.39±.05	13.39±.05	18.185±.06	20.62±.13 msec	4.11
$_7N^{12}$	β^+	16.36±.05	17.385±.05	22.475±.06	11.43±.03 msec	4.17

[a]The main decay mode is to the broad 2.9-Mev level in Be^8, with the resultant smearing out of the maximum energy. This energy and the Q value are obtained from the fit to the data of a Kurie function calculated with an assumed Q value and a density of states obtained from the Be^8 alpha-decay spectrum.

[3]Walter F. Dudziak, Positron Spectrum from the Decay of the μ Meson, UCRL-8202, March 1958.

PHYSICS RESEARCH

Robert W. Birge in charge

CHARGE EXCHANGE OF K^+ MESONS

Robert W. Birge, Robert E. Lanou, and Marian N. Whitehead

A. A triggered multiplate expansion cloud chamber was used in June 1957 to study the charge exchange of K^+ mesons.[1] Preliminary results were reported at the January 1958 New York meeting of the American Physical Society. The reaction studied was

$$K^+ + n \rightarrow p^+ + K^0.$$

According to the scheme of Gell-Mann and Pais, this reaction is the only possible one to explain the disappearances of K^+ mesons that have been seen in emulsions. The positive-strangeness K^0 mesons produced are expected to decay 50% of the time in the K_1^0 mode (θ_1^0) and 50% in the K_2^0 (θ_2^0) mode. In addition, the long-lived K_2^0 can interact either as K^0 or $\bar{K}^0$; the $\bar{K}^0$ interactions give negative-strangeness particles.

A counter telescope identified the K^+ mesons in the momentum-analyzed beam entering the cloud chamber. The charge-exchange target, either Cu or W, was placed in the chamber with an anticoincidence counter directly behind it. The chamber was expanded and a picture taken when a K^+ particle entered the chamber and failed to reach the anticoincidence counter. The number of interactions per passing K^+, and the presence of stopping K^+'s when the anticoincidence counter was removed, indicated the reliability of the counter system.

The "charge exchange" pictures should contain true charge exchanges, plus inelastic scatters from which the scattered K and interaction products miss the anticounter. Using the experimental value for the cross section for K^+ disappearances from emulsion work, we estimate that one in five of the K^+ interaction pictures is a charge exchange. Taking all these factors into account and considering the geometry of the setup, we should have seen 20 K_1^0 decays. An ultraconservative estimate, using special selection criteria for acceptable pictures, leads to a minimum number of 5. No events were seen that could be interpreted as K_2^0 decays.

The results suggest that either the charge-exchange cross section is lower than expected or the long-lived decay mode predominates. For the latter case to be true a drastic change would be necessary in the Gell-Mann and Pais explanation of the existence of two neutral K^0's of different strangeness.

---

[1] Birge, Courant, and Whitehead, in Proceedings of the International Conference on Mesons and Recently Discovered Particles, Padua-Venice, September 1957.

[2] Lanou, Birge, Courant, Whitehead, Bull. Am. Phys. Soc., Series II, 3, 24 (1958).

B. The investigation of the charge exchange reactions has been continued in collaboration with Wilson M. Powell and William B. Fowler, using their 30-inch propane bubble chamber. The preliminary results from this experiment also were reported at the New York meeting of APS.[3]

A separated K^+ designed by Dr. Donald Stork and Dr. John Mulvey of UCLA was modified to increase the spatial separation between the π mesons and K mesons. The beam then gave 500-Mev/c K mesons with a π/K ratio of about 15/1. The 50,000 pictures taken during the run are being scanned for θ^0 decays, and for all disappearing tracks and interactions. To date one definite and one possible charge exchange with the appearance of θ_1^0 have been found where 10 are expected.

INTERACTIONS OF 5.5-Bev/c π^- MESONS IN PROPANE

Robert W. Birge, Robert E. Lanou, and Marian N. Whitehead

A beam of 5.5 Bev/c π^- mesons was designed for use in a collaborative experiment with Wilson M. Powell and William B. Fowler. The purpose of the experiment is to investigate the interactions of high-energy π^- mesons with the nuclei of hydrogen and carbon of the propane.

A total of 50,000 pictures was taken. Scanning and analysis of these pictures have begun. In particular this group is concerned with the polarization of the protons produced by the decay of Λ^0 hyperons. This polarization gives a measure of the constant, α, that characterizes the degree of parity mixing in the decay of the Λ^0.

THE SCATTERING OF K^+ MESONS BY PROTONS

Leroy T. Kerth and Thaddeus F. Kycia

The K^+ beam to be used for the experiment was modified to give a separated beam of 350-Mev/c K^+ mesons with a ratio of K mesons to minimum tracks about 1 to 5. Emulsion stacks were exposed for several emulsion groups in this country and in Europe.

The counters and associated electronics to be used in the experiment were set up and tested at the Bevatron prior to the breakdown of the Bevatron. Measurements of the absolute differential cross section for elastic scattering of K^+ mesons by protons will start when the Bevatron resumes operation. The cross section will be measured at several K energies between 170 and 300 Mev. The counter array is such as to measure the differential-scattering cross-section function of angle from $\approx 20^\circ$ to about 180° in the center-of-mass system.

---

[3] Whitehead, Birge, Fowler, Lanou, and Powell, Bull. Am. Phys. Soc. 3, 24 (1958).

PHYSICS RESEARCH

Hugh Bradner in charge

SEARCH FOR DIRAC MONOPOLES

We have used nuclear emulsions in an attempt to detect the Dirac unit magnetic pole.

A. Nuclear plates were exposed at Thule, Greenland, through the cooperation of Professor Victor Neher, of California Institute of Technology, to see whether any monopoles reached the earth in that region, near the north magnetic pole. Results were negative.

B. Nuclear emulsions were placed inside the Bevatron (near the lower pole-piece and downstream from a 5-mil aluminum target) to detect any monopoles of mass between that of the π meson and that of the proton, made by 6.2-Bev protons in the Bevatron. No monopoles were seen. An upper limit on the total production cross section, by this experiment, would be approximately 10^{-32} cm^2. With this arrangement we would have detected monopoles regardless of their binding energy in matter.

C. Nuclear emulsions were placed directly below a 1-inch-thick target in the Bevatron. Any monopoles formed in this target by primary or secondary processes would "drift" under the action of the magnetic field, provided that the binding energy of the poles in matter were less than approximately 2 ev. From the absence of monopoles in this experiment, we can establish an upper limit on the total production cross section of approximately 10^{-35} cm^2 for a monopole of any mass up to protonic mass, provided that the binding energy is less than 2 ev.

D. If the binding energy is greater than 2 ev, monopoles formed in the target will be trapped there, and can be released only by applying strong enough magnetic fields to "rupture" them free. We were able to establish that no monopoles were freed from a Bevatron target that was placed in Dr. Harold Furth's 200-kilogauss magnetic field and could thus establish an upper limit of approximately 10^{-38} cm^2 on the production cross section of monopoles by primary or secondary processes involving 6.2-Bev protons for any monopole mass up to protonic, and binding energy in matter between 2 and 40 electron volts.

PHYSICS RESEARCH

A. C. Helmholz in charge

Reported by Robert W. Kenney

A. SYNCHROTRON

1. Photopion Physics

a. The reaction $\gamma + p \rightarrow \pi^+ + n$ has been studied at 260 Mev and 290 Mev photon energy in the angular range from 0° to 160° (center-of-mass system). The photoelectric ejection of π^+ from the pion cloud has been confirmed and the general shape of the distributions is in good agreement with the dispersion-relation calculation by Chew, Goldberger, Low and Nambu except at the forward angles from 0° to 25°, where values according to the theory lie significantly below the experimental points. Agreement of measured and predicted total cross sections for both photon energies could be improved.

b. The yield of photon π^0 mesons from complex nuclei (Li to Pb) has been measured as a function of photon energy (160 to 340 Mev) and pion emission angle (45° to 135° (lab)) in a study of the interactions of pions with nuclear matter. Cooperative (coherent) production has been observed in the forward direction, and the backward-angle data show that the surface-production model is not applicable in this case. The data are being reduced by use of optical-model techniques; no final results are available at this time.

c. The 4-inch-diameter bubble chamber has been filled with liquid deuterium and operated directly in the synchrotron photon beam in order to study the reactions

$$\gamma + d \rightarrow \pi^- + 2\,p, \qquad \gamma + d \rightarrow \pi^+ + 2\,n.$$

The ratio π^-/π^+ is easily determined in an unbiased manner in the energy range from threshold to 170 Mev photon energy. The theory predicts this ratio quite exactly, because final-state nucleon effects cancel. The complete study of $\gamma + d \rightarrow \pi^- + 2\,p$ has been made in the energy range from threshold to 200 Mev photon energy. The data are being reduced and results will be available within a few weeks. Preliminary data agree with the spectator model of photon-deuteron interactions.

2. Electromagnetic Effects

a. Polarization of bremstrahlung from 32-Mev electrons has been observed as a function of photon angle θ with respect to the incident electron direction, and agreement has been found between the experimental results and the theory of May. Additional statistics are being gathered to improve the experimental results over the angular range from

$$\frac{m_0c^2}{E_0} < \theta < 2.5\,\frac{m_0c^2}{E_0}\,.$$

B. 184-INCH CYCLOTRON

Scattering Studies

a. The scattering of π^+ mesons from C, Cu, and Cd has been observed for incident π^+ of 440 ± 6 Mev. The construction of a simple π^+ beam of relatively high flux was achieved with the use of two focusing magnets. The total and absorption cross sections will be known to 10% and 5%, respectively, when the data analysis has been completed. Some data were also taken at 400 Mev. Optical-model constants will be derived from the final cross-section values.

b. The scattering of π^- mesons from C, Al, Cu, and Pb for incident π^- energies of 370 ± 7 Mev has been observed. The total and absorption cross sections will be known to 5% to 10% when the data analysis has been completed. A partial analysis, with somewhat larger errors, yields the following results.

	σ_{Total} (mb)	$\sigma_{Absorption}$ (mb)
C	400 ± 40	165 ± 17
Al	970 ± 100	300 ± 30
Cu	1480 ± 30	510 ± 100
Pb	-----	1380 ± 275

Optical-model constants will be derived from the final cross-section values.

c. The total cross section for scattering of 100-Mev π^- mesons from hydrogen has been measured, to improve the experimental results in this energy region and to resolve a question dealing with the validity of dispersion relations for the pion-nucleon scattering. The data are incomplete and additional running will be required.

C. BEVATRON

Scattering Studies

The scattering of 3- to 6.2-Bev neutrons from carbon and lead has been observed, and both total and absorption cross sections have been measured. The experiment will continue until 5% statistics are achieved.

THEORETICAL GROUP

David L. Judd

NUCLEAR REACTIONS

The analysis of the high-energy end of the energy spectrum of neutrons resulting from the p + d reaction at incident energies of about 10 Mev was completed. The structure in the experimentally measured energy spectrum of the neutrons can be attributed to the final-state nuclear interaction between the two protons in spite of their Coulomb repulsion. A fair agreement between the calculated and experimentally measured energy spectrum was obtained. A report was prepared[1] and a manuscript submitted to the Physical Review. (Warren Heckrotte, with Malcolm MacGregor, UCRL, Livermore)

In order to calculate the photomeson production from deuterons it has been necessary to evaluate the disperion-relation formula for photoproduction from free nucleons. This work has been completed for the case

$$\gamma + p \rightarrow \pi^+ + n ,$$

and the results have been found to be in reasonable agreement with similar calculations carried out at Illinois. The next step in the process will be to use this more careful calculation of the free-nucleon amplitude in evaluating the deuteron cross section. Following this step will come the evaluation of formulas, derived in the course of the present program, for the process

$$\gamma + d \rightarrow \pi^+ + n + n ,$$

in order to compare with the concurrent experiments of R. Kenney et al. at this laboratory (IBM 650 computations by Marjory Simmons). (Jack L. Uretsky)

The deuteron-pickup process has been investigated in an optical-model approximation. The original Chew-Goldberger theory has been modified to include the interaction of the incoming nucleon with the entire target nucleus and the interaction of the outgoing deuteron with the residual nucleus by means of a smoothly varying optical potential in a WKB approximation. By so considering the initial and final-state scattering, one obtains a broader angular distribution and a magnitude reduced considerably below that from the Born-approximation treatment. By comparing the theory with experimental cross sections for carbon at 95 Mev, one requires (a) a nuclear momentum-density distribution for the pick-up nucleon on the order of $\exp(-E/20)$, in agreement with other results from nuclear scattering experiments, and (b) a neutron number in the target nucleus on the order of the actual total number of neutrons in C^{12}. Thus the optical-model treatment appears to give both the correct angular distribution and the magnitude for the pickup process, and it should be equally applicable for the

[1] Warren Heckrotte and Malcolm Mac Gregor, Neutrons from the p+d Breakup Reaction, UCRL-5080, Dec. 1957.

time-reversed process of stripping. (Kenneth Greider)

The polarization of the outgoing pickup deuteron has been calculated by including spin-orbit interactions in both the initial and final states. The results are at present being compared with recent 145-Mev pickup polarization experiments, and it appears that the optical-model treatment gives at least a qualitative explanation of the observed data. A Ph. D. thesis on this material is being written. (Kenneth Greider)

A number of investigations have been started based on the idea that in the multi-Bev region the interaction between two nucleons or between a pion and a nucleon is best understood in terms of a fundamental pion-pion interaction. First, calculations have been performed to show that a certain way of analyzing experimental observations of the reaction $\pi + n \rightarrow 2\pi + n'$ may yield a direct measure of the π-π cross section. Second, an attempt is being made in collaboration with W. Frazer and L. Rodberg (both in the Physics Department) to formulate a more or less fundamental theory of the π-π interaction on the basis of dispersion relations. In connection with this program, certain related but more general questions concerning the nature of relativistic dispersion relations are also being studied. (Geoffrey F. Chew, Zaven Guiragossian, and How-sen Wong)

With a different practical goal but with methods similar to those for the pion-pion interaction is an attempt to determine accurately the Yukawa constant from low-energy nucleon-nucleon scattering. It is hoped that this constant can be shown to be the residue of a pole in the complex momentum-transfer plane for n-n scattering and that an extrapolation of physical data will yield this residue. (Peter Cziffra)

An effective mass approximation (to describe kinematical effects associated with the dispersive optical-model potential) is used in studying the inelastic scattering of pions within nuclei. This modifies considerably the free-nucleon cross section. (Kenneth Watson with Charles Zemach of the Physics Department)

STRUCTURE OF THE NUCLEON AND NUCLEAR STRUCTURE

A conjecture that the physical nucleon may in fact not contain a "bare" nucleon in its core has been investigated with relation to measurements of electron-neutron and electron-proton scattering. It has been shown that this hypothesis is supported by a semiphenomenological approach to field theory and that it helps remove the difficulty connected with the absence of charge in the structure of the neutron. (Geoffrey F. Chew)

The continued study of the deformation energy of a charged drop has revealed the need for a revision of the conventional liquid-drop theory of fission. A paper describing these developments, as well as some earlier work on the deformation energy of a distorted spheroid, has been written.[2] (W. J. Swiatecki)

---

[2] Wladislaw Swiatecki, Deformation Energy of a Charged Drop. III. Further Developments, UCRL-3991, Dec. 1957.

The statistical model of the nucleus was examined in order to include the effects of nuclear correlations. By introducing the effective mass approximation, the resulting correction can be expressed as a simple modification of the usual formulas. This results in a decrease in the density of levels of an excited nucleus, which is necessary to bring the model into better agreement with certain nuclear reaction experiments. The temperature coefficient of expansion for nuclear matter was also obtained. An attempt was made to include the effect of the finite size of the nucleus on the density of levels; it was only partially successful. (Warren Heckrotte)

The methods of Sawada and Wentzel, used in a quantum-mechanical discussion of plasma oscillations in degenerate electron gases, are being applied to a study of possible hydrodynamic oscillations of nuclei. Such modes are expected to exist, but some of them seem to be rather strongly damped. (The theory of damping of such waves was not given by Sawada and Wentzel.) Possible means of experimental observation are also being studied. (A. E. Glassgold and Kenneth Watson of the Physics Department and Warren Heckrotte)

ANTINUCLEONS

Preliminary results from the calculation of the interactions of antinucleons with complex nuclei, referred to in the preceding Quarterly Report, have been obtained from the Livermore machine code and show an encouraging relation to experiment. A detailed program in collaboration with A. E. Glassgold (Physics Department) and José Fulco (visitor in the Theoretical Division) to determine the parameters of the optical model is now in progress. (Geoffrey F. Chew)

The theoretical nucleon-antinucleon phase shifts obtained by James Ball and Geoffrey F. Chew[3] have been used to predict the angular distribution in elastic nucleon-antinucleon scattering. The results, which are in good agreement with experiment, are given in a separate report.[4] (José Fulco)

Work is proceeding on the production of nucleon-antinucleon pairs by pions. Of particular interest should be the final-state interaction in which a deuteron may be formed. This problem may be solved near threshold by using a nonrelativistic treatment developed by Watson. (Owen Eldridge)

An unsuccessful effort was made to find a useful way of utilizing dispersion relations to evaluate the process $n + \bar{n} \rightarrow 2\pi$. Consequently, as a new approach, a study of a nonlocal pseudovector pion-nucleon interaction is being made in the hope of formulating a theory applicable to both high- and low-energy processes. The investigation to date seems to reveal some interesting properties of the usual local theory provided that a local interaction be considered as the limit of a nonlocal one. It is hoped that some preliminary results can be reported in the near future. (Jack L. Uretsky, with P. Redmond of the Physics Department)

---

[3] James Ball and Geoffrey F. Chew, Dispersion Relations for Scattering in the Presence of a Coulomb Field, UCRL-3869, July 1957.

[4] José Fulco, Theoretical Angular Distribution of Nucleon-Antinucleon Scattering at 140 Mev, UCRL-8183, Feb. 1958.

ATOMIC AND MOLECULAR PHYSICS

The scattering of charged particles by neutral atoms has beem formulated in a novel manner. The interactions have been separated into those of small and of large momentum transfer, the former being subject to an exact treatment. The large-momentum-transfer interactions (in the sense of perturbation theory) are treated by perturbation methods. It is shown that the method becomes quite simple in several limiting cases. For example, in classical mechanics a particle moving in a potential well undergoes a large number of small momentum-transfer scatterings; then the limit (applicable in the interior of a heavy atom) of a particle in a potential well is obtained immediately. The properties of this potential are investigated by use of the Fermi-Thomas and Hartree-Fock models. Several variational methods for handling the scattering problem are also discussed. (Marvin Mittleman, UCRL, Livermore and Kenneth Watson)

The calculation of the μ-mesic molecular systems and their formation rates have been completed. For the (pμp), (dμd) and (pμd) systems the wave functions for all the bound states and several scattering states have been calculated. With these, rates of molecular-ion formation, scattering cross sections, and exchange cross sections have been obtained. An analysis of the behavior of a μ meson in liquid hydrogen leads to results in agreement with the experimental observations by Alvarez et al. Of particular interest is the presence of an anomalously small cross section for the scattering of (dμ) atoms from protons for very small energy. This behavior of the cross section is essential in the explanation of the presence of "gaps" in the experimental observations. Analysis of the nuclear reaction in the (pμd) system leads to an internal conversion coefficient of ~ 0.3, in agreement with the experimental results of Ashmore et al. A letter to the editor of the Physical Review has been submitted with these results. A complete paper on this subject is being written. (Stanley Cohen, David L. Judd, and Robert J. Riddell, Jr.)

The IBM 701 code for determining the vibrational states of the mesonic molecular hydrogen ion has been modified to calculate the vibrational states belonging to the ground electronic state of the electronic molecular ion. Since in general the molecular ion can be found in any of several rotational states, we have computed the vibrational states for three higher rotational states in addition to the ground rotational state. This work will appear in a UCRL report. (Stanley Cohen, John Hiskes, and Robert Riddell, Jr.)

Some preliminary calculations pertaining to the dissociation of H_2^+ ions by electric fields have been done. These calculations apply to those ions which are in the various vibrational states belonging to the ground electronic state of the system. The calculations have been done by using the exact eigenfunctions and eigenvalues which are available from the calculations of the vibrational states of the unperturbed ion. To dissociate these ions in a time on the order of one second, electric fields on the order of 10^6 volts per centimeter are estimated for those ions populating the highest vibrational state. Fields on the order of 10^8 volts per centimeter

appear to be required for those ions in which the ground vibrational state is populated. A UCRL report has been prepared in which these calculations are considered in more detail.[5] Dissociation of H_2^+ ions by the Lorentz force, $\vec{v} \times \vec{B}$, for H_2^+ ions moving in a magnetic field, is somewhat analogous to electric dissociation. Work on this aspect of the problem is continuing and will be reported later. (John Hiskes and Jack Uretsky)

PARTICLE CLASSIFICATION, DECAY SCHEMES, AND RELATED TOPICS

A theory of elementary particles tentatively proposed by Heisenberg and Pauli has been examined and shown to be internally inconsistent. Variations of the theory privately suggested by Gürsey have likewise been shown internally inconsistent. A spinor model possessing the required symmetry properties has been obtained, but it has not been determined whether a dynamical theory based upon this model would be useful. (Henry P. Stapp)

The group theoretical structure of elementary particles is being investigated for the determination of the number and nature of basic fields necessary to account for the observed symmetry properties of elementary interactions. (Feza Gürsey)

The Hilbert space of conventional field theory has been extended and generalized to include some of the recent ideas of Pauli and Heisenberg. The metric (definite or indefinite) of the Hilbert space emerges in a natural manner as a representation of the CPT transformation, and its existence is guaranteed by the invariance of the theory under this group. The "tensor" in Hilbert space that could be used to change dotted into undotted indexes is of a more dubious nature. Its existence depends on invariance under time reversal. Attempts are now made to fit the known elementary particles into this scheme. (Maurice Neuman)

A study and analysis of various particle-classification and decay schemes has been undertaken. At present this consists mainly of a survey of the published literature (experimental and theoretical) on these and other related topics, such as the symmetries in field theory, weak interactions, and two-component theories. (Robert Profet)

A paper on the universal Fermi interaction has been submitted for publication.[6] In this work the V-A charge-exchange form of the Fermi interaction is obtained as a consequence of assuming invariance under a continuous group of transformations. The universality of the Fermi interactions is discussed, and in connection with meson and hyperon decay an additional direct Yukawa interaction is introduced. (Sidney A. Bludman)

---

[5] John R. Hiskes and Jack L. Uretsky, Dissociation of H_2^+ Ions by Electric Fields, UCRL-8255, April 1958.

[6] Sidney A. Bludman, On the Universal Fermi Interaction, UCRL-8241, April 1958.

Heisenberg has recently advocated that the anticommutation relations between a spinor field and its adjoint be modified. For an understanding of what this proposal implies, an investigation was made into the mathematical propositions implied by the canonical commutation relations. These relations imply that quantum mechanics is described by an Abelian group of rotations in ray space (a ray is a state vector up to an arbitrary phase factor). When the total momentum operator and the operator representing the coordinate of the center of energy are expressed in terms of field quantities and these relations are combined with the requirement of time reversal, they lead to the usual commutation relations appropriate to Bose-Einstein or Fermi-Dirac fields. The canonical commutation relations are also necessary to preserve formally the Hamiltonian equations of motion for a dynamical system. Hence an attempt to modify the commutation relations between field quantities necessarily implies a drastic change in the equations of motion that determine the quantum-mechanical-state vector. It is concluded that the Heisenberg proposals will be unsatisfactory unless such a new and self-consistent scheme can be developed. (Joseph V. Lepore)

The radiative corrections to decay processes are being studied. These corrections include a part which corresponds to the classical radiation damping and a part which is purely quantum-mechanical and depends on the form of interaction. An attempt is being made to understand the behavior of the quantum-mechanical term for various interactions. (Owen Eldridge)

It is currently believed that the lowest-order contributions to some decay processes proceed via intermediate closed loops. The evaluation of these contributions is not possible in the framework of the usual renormalization procedures. Lehmann, Zimmerman, and Symanzik have developed an alternative method of obtaining the renormalized solutions to the usual problems of field theory without encountering the usual divergent integrals. Certain generalizations of their results have been obtained which will, it is hoped, allow their procedures to be applied to the decay processes. The work is continuing. (Henry P. Stapp)

Transformation formulae between the decay and lab systems are being calculated for the nucleon polarization in hyperon decay. (Jonathan Young and Sidney Bludman)

A formulation of electrodynamics has been given in which emphasis is placed on a law of parallel displacement for spinor quantities. Such a concept is useful in describing the gauge invariance of this theory. This invariance is analogous to the demand of the general theory of relativity that the laws of physics be invariant under general coördinate transformations. In this theory the affine connection is the electromagnetic potential and the "curvature" is the electromagnetic field strength $F_{\mu\nu}$. The same scheme may be applied to a discussion of the B field of Yang and Mills. (LeRoy Cook, Jr. and Joseph V. Lepore)

μ MESONS

The assumption of a universal Fermi interaction requires that μ decay proceed through an interaction involving the fermion pairs ($\nu\mu$) and ($e\,\nu$). The value $\rho < 3/4$ for the Michel parameter characterizing the μ-decay spectrum then poses a serious problem which is being studied along several lines.

(a) Nonlocal interaction: $\rho < 3/4$ can be obtained if the ($\nu\mu$) ($e\,\nu$) interaction proceeds through a three- or four-point interaction involving fermions in the intermediate state. The simpler model (proposed by Lee and Yang) involving exchange of a heavy meson between the ($\nu\mu$) and ($e\,\nu$) pairs unfortunately leads to $\rho > 3/4$.

(b) Electromagnetic radiative corrections: Small errors in the Behrends, Finkelstein, and Sirlin calculation of the vertex corrections and inner bremmstrahlung have been found by Behrman. Because the dominant corrections are by soft photons, a simple classical calculation has been suggested to Owen Eldridge and Robert Pugh. Besides checking Behrman this may suggest how a specifically quantum-mechanical correction may lead to a larger electromagnetic correction and bring agreement with experiment.

(c) Finite mass λ for the neutrino associated with the meson (suggested by F. Gursey and R. Riddell): This works in the direction of lowering the ρ value to be expected theoretically. The experimental limits on this neutrino mass are, from π- and μ-decay energetics, $\lambda \lesssim 10\ m_e$. (Sidney A. Bludman)

Work is continuing on the application of polarized cascade showers to μ decay. The computer program is effectively complete, and preliminary results, including statistics, should be available shortly. (LeRoy F. Cook and N. A. Williams)

MISCELLANEOUS

An analysis was made of the most suitable arrangement of counters in order to minimize experimental error in the precise measurement of γ-ray energies. (Warren Heckrotte)

The calculation of the separable spheroidal well is still awaiting completion of the new arithmetic routine for the 701 which is now being debugged by Matthew White. (Jack L. Uretsky)

A study has been made of certain transient effects in the electrical system of the large bubble chamber that appear under emergency operating procedures. These considerations have been generalized so that the stability of any similar system can be determined a priori from the design parameters. (Alper Garren and Warren Heckrotte)

A variety of calculations have been made on particle orbits in proposed devices for yielding thermonuclear power. Some of the results concerning particle motion in a class of magnetic-field configurations are of general interest and will probably be declassified soon. (Alper Garren, John Hiskes, and Lloyd Smith)

A program for the study of magnetohydrodynamic stability of low-density ionized gases is continuing. Helmholtz, Taylor, and interchange stabilities have been investigated by use of the Boltzmann transport equation. A paper on the theory of the stabilized pinch discharge is in process of publication in the Proceedings of the Royal Society. (S. Chandrasekhar, Allan N. Kaufman, and Theodore Northrop, UCRL Livermore, and Kenneth Watson)

Some preliminary work has been done on setting up machine-computation programs to be used in the design of the proposed low-energy, high-current cyclotron for chemistry research. Some of the necessary equations and procedures have been determined for calculating median-plane orbits in arbitrary magnetic fields, for finding equilibrium orbits, for determining radial and vertical oscillation frequencies about the equilibrium orbit, for obtaining the period of the equilibrium orbit, and for interpolating values of the field measured on a grid of points in a model magnet to get the field at an arbitrary point. (Alper Garren)

Analytical and numerical calculations, aimed at determining approximate parameters for the cyclotron mentioned above, have been carried out. A theory of orbits and their stability in rather general spiral-ridge cyclotron fields has been developed. The generality is limited at present to the hard-edge or discontinuous-field charge approximation, and in parts of the work to field arrangements containing only two discrete field strengths. Additional work will be undertaken to relax these restrictions, to study such points of interest as nonlinear sector resonances for radial oscillation frequencies near the circulation frequency, and to investigate other questions that arise as the work proceeds. In addition, work is under way to determine and minimize undesirable effects of voltage drop along the dee edges and its variation with rf frequency. (David L. Judd and Lloyd Smith)

REDUCTION OF DATA FROM BUBBLE CHAMBERS

With the IBM 704

Programming has begun for the 15-inch and 72-inch bubble chamber problems.

Since December a 704 program designed to analyze data for the 15-inch and 72-inch hydrogen bubble chambers has been under development. This program is designated as Pang, and it will be used in the same capacity on the 704 as Hydro is in the present scheme of 650 data analysis for the bubble chamber. (For the Hydrogen Bubble Chamber Group by Charles Stableford)

Programming of GUTS, a 704 code to fit certain bubble chamber events, continues. As the SHARE assembly program has been adapted recently for the high-speed printer, it has been decided to write the program in SHARE language. This has the advantage of making available the extensive SHARE library of subroutines. Several methods of fitting bubble chamber events, subject to the constraints of energy-momentum

balance, have been studied for machine suitability; among them are the hunting technique of Davidon and the N-step method. The most promising method appears to be an iterative technique due to Horace Taft (Engineering Note 4320-60 M6). This method requires inversion of matrices that may be seriously ill-conditioned, and a satisfactory inversion method is still being sought. (Seymour Singer)

With the IBM 650

Analysis of V-particle events in the bubble chamber has been continuing. Several programs have been written in a twofold effort to get some data analyzed and determine the best method of solving the central problem, which is to determine from the measurements, the adjusted values of the momenta and angles of each of the particles in an event. Most recently a method due to Horace Taft has been used in the program, called Kick I, which analyzes both single-V and double-V events. A complete description of the set of programs that evolve from this work should be ready for the next progress report. (Harold Hanerfeld, Robert Harvey, and Barbara Levine)

A set of programs to modify Hydro II output to a form useful in the Cloudy program written by Howard White has been written for the 650. (Richard Mitchell for Bruce McCormick)

A routine to compute the momentum of a proton that stops in the bubble chamber from the empirical relation $p = \alpha L^{1/4} (1 + \beta \ln L)$ Bev/c, where L is the track length, has been written for the 650. (Richard Mitchell for Bruce McCormick)

OTHER ACTIVITIES OF THE MATHEMATICIANS

Some testing on the differential-equations routine for the 650, which was reported in the preceding progress report, has been done, and the program will soon be available. (Robert Harvey)

A general, n-dimensional vector inner-product routine has been written for the 650. Its code name is VPROD. (Robert Harvey for Bruce McCormick)

Two routines, Snap and Snappy, were written for the 650 to determine the unknown coefficients in 4-, 5-, and 9-parameter (theoretically determined) distribution functions. Experimental results supply the actual distribution in space over 36 intervals. The routines compute a least-squares fit to this overdetermined system. An associated routine, Snapper, integrates the distribution function used in Snap and Snappy over each of the 36 intervals. (Harold Hanerfeld for Frank Crawford)

A 650 program COUNT was written to compute the efficiency of a cylindrically symmetric counter and source arrangement. A description of the analysis of this problem and the resulting program has been published as a separate report.[7] (Kent Curtis and Alice McMullen for Health Chemistry)

[7] Kent Curtis and Alice McMullen, Counter Efficiency for a Cylindrical Source and Cylindrical Counter, UCRL-8110, Jan. 1958.

FLOPS has been modified to make it more efficient on our present IBM 650 by using the index registers and automatic floating-point arithmetic in the internal structure of the FLOPS routine. Testing of the modified routine is nearly complete. The modifications have been designed to alter the internal structure of FLOPS, but the programming in the FLOPS language is unaltered. (Alice McMullen for Kent Curtis)

Testing and preliminary experimentation with FORTRANSIT, a compiling routine for the 650 furnished by IBM, is under way. The control panels are ready and a few simple programs have been compiled. We are presently trying to learn about the limitations and pitfalls that may exist but which are not mentioned in the manual provided by IBM. When we feel that we are sufficiently familiar with the routine to advise on its use we will publish our notes and make the routine available to all. (Alice McMullen and Kent Curtis)

During the period of this report considerable effort was concentrated on being familiar with, and making additions to, the WRETCH routine and DULUX floating-point interpretive system, both of which were written by David Johnson for Jack Uretsky. WRETCH is a program (for the IBM 701) to calculate eigenvalues and coefficients in spheroidal coordinates. The octaldecimal conversion routine, which is part of the DULUX system, has been partially checked out and a floating-point print routine has been written which utilizes the 701 assembly program BCD print routine. This will replace the DUAL print routine, presently incorporated in WRETCH after it has been thoroughly checked out. (Matthew White for Jack L. Uretsky)

Summaries were written of the SOAP Manual and of characteristics of Floating-Point Arithmetic and use of Index Registers on the IBM 650. (Matthew White for Kent Curtis)

Programs have been written which compute cross sections in photo production of positive π mesons from protons according to dispersion-relation theory, and investigate the effect of "small" terms on the cross section. (Marjory Simmons for Jack L. Uretsky)

A SOAP relocatable subroutine has been written to compute the Clebsch-Gordan coefficients for values of the arguments up to 132. (Marjory Simmons for John Rasmussen)

Programs were devised and run on the IBM 701 to determine the energy distribution and scattering angles for neutrons from heavy nuclei excited by alpha particles and deuterons. The emission of two and three neutrons at various nuclear temperatures and input energies was studied. (Robert Freeman for Paul Donovan, Bernard Harvey, and William Wade)

A least-squares procedure was devised and is presently being programmed for the IBM 650 to calculate a dispersion-relation integral used in meson scattering theory. A least-squares fit will be obtained for

total-cross-section data and the integral evaluated. A variance-covariance matrix will also be obtained for error analysis. (Robert S. Freeman for Robert Karplus)

A program was written which calculated integrals of the form

$$C(kR, \ell) = \int \left\{ \frac{J_1(\frac{kR}{\ell} r)}{r} \right\}^2 dx_1\, dx_2\, dy_1\, dy_2 ,$$

where $r = [(x_1 - x_2)^2 + (y_1 - y_2)^2]^{\frac{1}{2}}$ and J_1 is a Bessel function. Values were obtained for a series of values of kR and ℓ. Simpson's rule was used to perform the integration. (Donald Itzel for Wilmot Hess)

Near completion is a program designed to determine the shower products and their polarizations at an arbitrary distance in certain media resulting from an incident beam of high-energy electrons. The equations used for the calculations are based on the assumptions of complete screening and negligible Compton interactions. (Donald Itzel for N. A. Williams)

A study of elastic scattering of antiprotons, using both a sharp-edge and a fuzzy-edge potential with the WKB approximation, was completed on the 650. (Donald Steinberg for Jack Sandweiss and Robert Birge)

A program for the 650 is being written to calculate the dynamics of any two-body interaction or decay with almost complete freedom of choice of the dynamical variables. (Donald Steinberg for Peter Berge and Kent Curtis)

Some radial-wave functions of the H_2 ion were computed by use of a 701 program reported in a previous progress report. (Victor Brady for John Hiskes)

The differential analyzer has been extensively used to compute orbits for low-energy π mesons in the cyclotron field, using new target positions. (Jonathan Young for Roy Haddock)

Budget runs for the current fiscal year and the next two fiscal years were made on the IBM 650. Both Livermore and Berkeley were included. Recapitulation figures for 1958 were determined on the basis of additional information that becomes available as the current fiscal year progresses. Estimates for the budgets of 1959 and 1960 were prepared for the budget submission to the AEC. After the final budget run was completed, program books containing costs by subaccount numbers and effort figures by AEC classification were prepared. (Ardith Kenney for Director's Office)

A large number of orbits of charged particles in the Bevatron field have been computed for several applications. (Victor Brady for William Wenzel and Lloyd Smith)

Negotiations have been under way to obtain a 40% educational contribution from IBM on our 650 installation. These negotiations are now virtually complete and it is hoped that this arrangement with IBM will be put into effect soon. Negotiations have also been under way with the campus computer center on arrangements for the joint use of an IBM 704 to be located on the campus. The present expectation is that a 704 will be installed about May 1959 in the new Math, Astronomy, and Statistics Building which is being erected next to LeConte Hall. The laboratory will have the use of this computer about half the available time (approx. 75 hr/wk) in return for half the rent of the machine and an appropriate share of other costs. Details of this arrangement are being gradually worked out.

The IBM 650 was modified to include index registers, alphabetic device, and floating-point arithmetic in November. These additions have increased the usefulness of the machine considerably. (Kent Curtis)

PHYSICS RESEARCH

Edward J. Lofgren in charge

450-Mev/c K^- AND ANTIPROTON BEAMS AT THE BEVATRON NORTHWEST TARGET AREA SEPARATED BY THE COAXIAL VELOCITY SPECTROMETER

Nahmin Horwitz, Joseph J. Murray, Ron R. Ross, and Robert D. Tripp

The coaxial spectrometer has been completed and is in current use in a negative 450-Mev/c beam at the northwest station for separation of K^- mesons and antiprotons. A schematic diagram of the system is shown in Fig. 1. In Fig. 2 are shown the characteristic curves for the spectrometer, with operating points indicated for this application. (See UCRL-3492 for spectrometer details.[1] For a complete description of the system and its properties, see UCRL-8269.[2])

Characteristics of the final separated beams as observed in the 15-inch hydrogen bubble chamber with enough absorber to stop the desired particles in the chamber are as follows (containment of the desired particles in the visible range interval presented by the chamber was essentially 100 %):

Momentum spread:	± 2%
Beam size:	5 inches horizontal by $1\frac{1}{2}$ inches vertical at center of bubble chamber 25 inches behind final collimator (C 2)
Virtual source in horizontal plane:	$\frac{1}{2}$-inch slit at final collimator
Virtual source in vertical plane:	at ∞ with ± 0.01 radian angular limits
Dispersion:	essentially no correlation between position and momentum
Total background tracks per stopped K^-:	65:1
Stopped K^- per 10^{10} protons on target:	1:4
Total background tracks per stopped $\bar{p}$:	4000:1
Stopped $\bar{p}$ per 10^{10} protons on target:	1:250
Background constitution:	~85% μ (and e?), ~ 15% π
Ratio of particle fluxes in chamber with separator off and on (definition of "rejection ratio")	700:1

[1] Joseph J. Murray, A Coaxial Static-Electromagnetic Velocity Spectrometer for High-Energy Particles, UCRL-3492, May 1957.

[2] Nahmin Horwitz, Joseph J. Murray, Ron R. Ross, and Robert Tripp, 450-Mev/c K^- and Antiproton Beams at the Northwest Target Area of the Bevatron Separated by the Coaxial Velocity Spectrometer, UCRL-8269, April 1958.

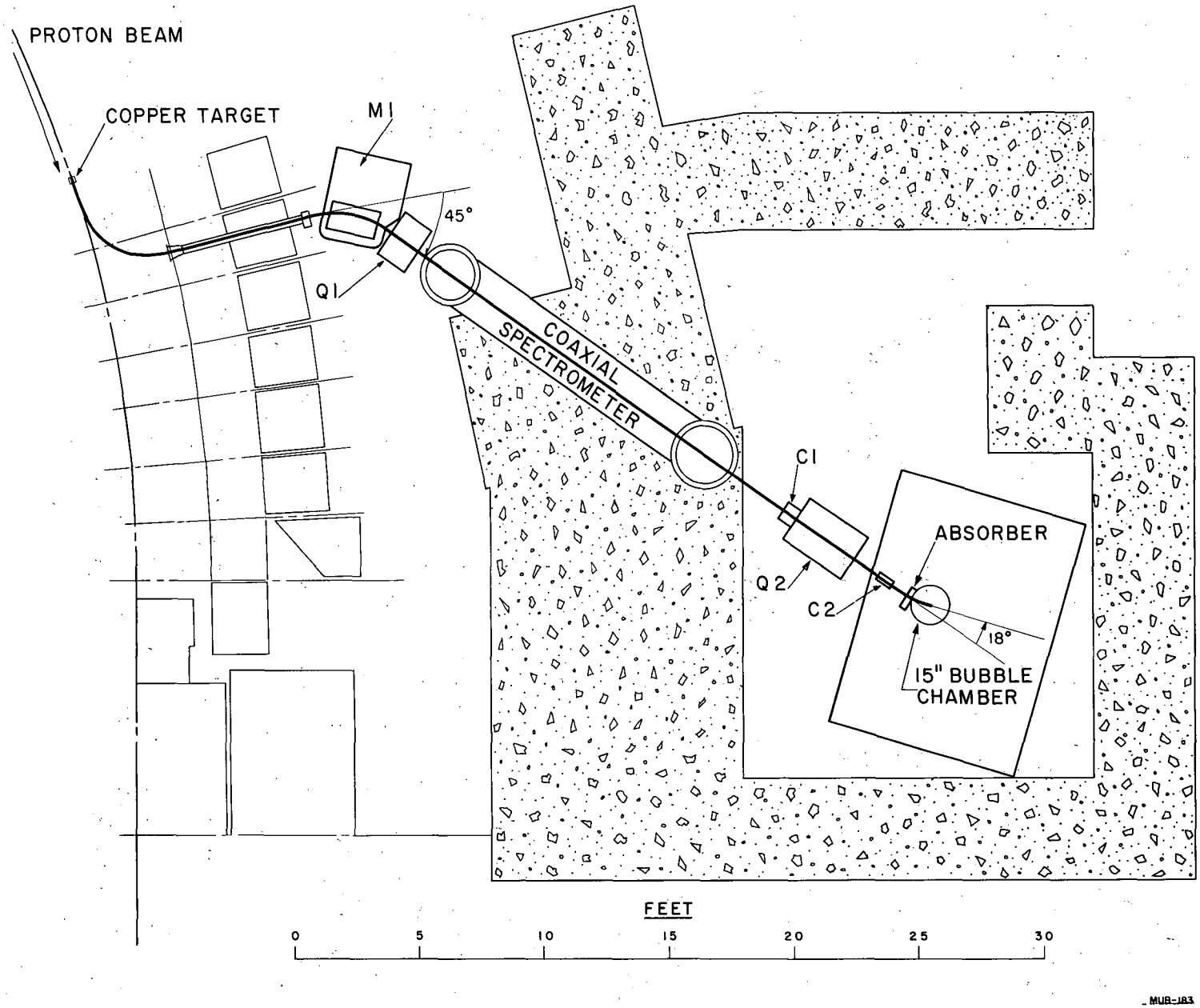

Fig. 1. Schematic diagram of the system.

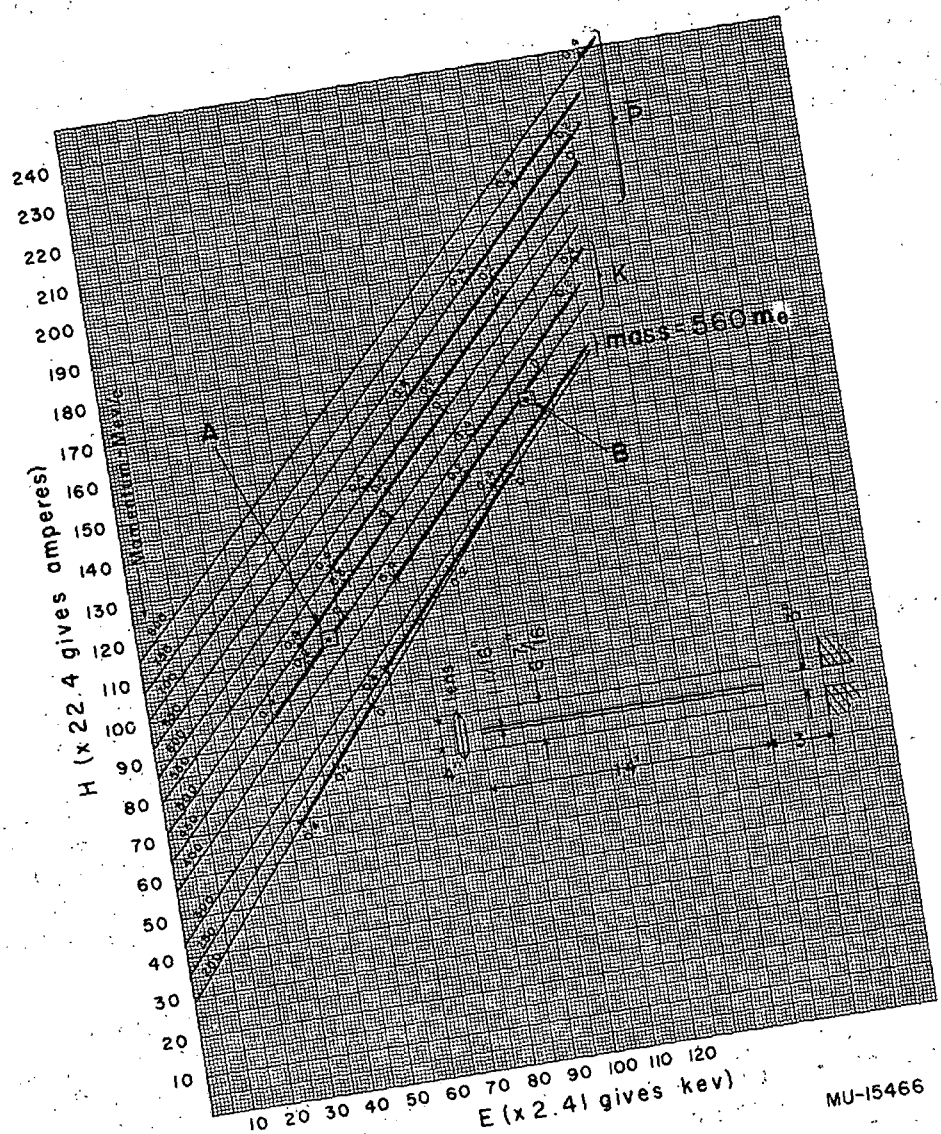

Fig. 2. Characteristics of a Coaxial Static Electromagnetic Velocity Spectrometer. Heavy portions of momentum contours are the useful operating regions for particles indicated. Rejected particles are pions. The appended numbers are ratios of the force constants of the selected particles and pions. This ratio determines the proper image distance for the entrance lens. A: 450-Mev/c $\bar{p}$; 112 kev; 2530 amp; $(F/F_\pi)_{\bar{p}} = 0.1$; $(F/F_\pi)_\pi = 1.0$; 3.5-inch diam. entrance and exit apertures, B: 450-Mev/c K^-; 250 kev; 3700 amp; $(F/F_\pi)_\pi = 0.88$; $(F/F_\pi)_K = 0.17$; 3.5-inch diam entrance and exit apertures.

Several bubble chamber, counter, and emulsion experiments will utilize this beam.

By using the observed flux of π^-, K^-, and $\bar{p}$ particles in the bubble chamber, known lifetimes, and known relative transmissions of the system, it is possible to estimate π^-/K^- and $\pi^-/\bar{p}$ flux ratios at the target. These ratios are found to be:

π^-/K^-	1000 ± 300
$\pi^-/\bar{p}$	$(2 \pm 0.6) \times 10^6$
Emission angle	0°
Momentum	450 Mev/c
Incident proton energy	6.2 Bev

ANTIPROTON CROSS SECTIONS

Charles A. Coombes, Bruce Cork, William Galbraith,* Glen Lambertson, and William A. Wenzel

Scintillation-counter experiments to measure antiproton-proton cross sections have been completed and include total, elastic, charge-exchange, and differential elastic cross sections at four energies from 133 to 333 Mev kinetic energy. For these measurements, antiprotons produced in a Be target located in the curved section of the Bevatron were focused by means of an 8-inch-diameter quadrupole magnet onto a slit at the exit of the 20-foot-long parallel-plate electrostatic velocity spectrometer. The plates were adjusted for $6\frac{1}{2}$-inch separation at the entrance and 2-inch separation at the exit end.

For an exit aperture of 2 inches $\times$ 8 inches, the enrichment factor for antiprotons relative to π mesons, when the spectrometer is set to transmit antiprotons, is in the region of 30 to 40 at a momentum of 600 Mev/c, and falls to about 4 at 900 Mev/c. Identification of the antiprotons was made by a time-of-flight counter system. The spectrometer permitted operation of the Bevatron at full intensity without difficulties due to accidental counts in the time-of-flight and scattered-antiproton detectors.

The all-metal, vacuum-insulated, 12-inch-long liquid hydrogen target and the large scintillation counters, which completely surrounded it, worked very satisfactorily.

An abstract of the results has been submitted to the Ithaca meeting of the American Physical Society, and a paper is being prepared.[3]

---

*Commonwealth Fellow. On leave of absence from AERE, Harwell, England.

[3] C. A. Coombes, B. Cork, W. Galbraith, G. R. Lambertson and W. A. Wenzel, p-$\bar{p}$ Cross Sections, 133 to 333 Mev, UCRL-8248, May 1958.

Measurements were also made of the cross sections for antiprotons in beryllium and carbon at 900 Mev/c momentum and for K^- mesons in hydrogen at 700 Mev/c.

Σ-HYPERON ASYMMETRY EXPERIMENTS

Rodney Cool,* Bruce Cork, James Cronin,* and William A. Wenzel

The product of the polarization and the asymmetry of the decay of the Σ^- hyperon has been observed to be small in bubble-chamber experiments.[4] An asymmetry is expected, since parity is not conserved for weak interactions. The statistical accuracy of these experiments can be improved, and the counters and coincidence circuits for this experiment have been built.

The orbits are being determined for 0.9- to 1.3-Bev/c π mesons produced in a straight section of the Bevatron. These will be focused by 8-inch-diameter quadrupoles onto a liquid hydrogen target.

To define the plane, the K^+ mesons produced by the reaction $\pi^\pm + p \rightarrow \Sigma^\pm + K^+$ will be detected and the decay asymmetry of the $\Sigma^\pm$ hyperons will be measured. Preliminary tests have been made with the counters in intense pion beams.

EXPLORATION OF METHODS TO DETECT Λ^0 PRODUCTION AT AN INTERNAL TARGET OF THE BEVATRON

Rodney Cool,* Bruce Cork, James Cronin,* William A. Wenzel, and Luke C. L. Yuan*

Measurements of the direction and the magnitude of polarization of the protons produced in Λ^0 decay will permit determination of the amplitudes for even- and odd-parity states in the proton-pion decay. The feasibility of this experiment is being determined.

Since the production cross section of the Λ^0 is small and the lifetime of the Λ^0 is so short, it is desirable to devise means of detecting the decay of the Λ^0 hyperons that are produced directly at the internal Bevatron target. To do this an experiment is being done to detect the decay proton and pion in coincidence. To reduce the background, a considerable amount of shielding has been built around the scintillation counters and a large collimator will be plunged in at the inside radius of the circulating beam of the Bevatron.

---

*On leave of absence from Brookhaven National Laboratory.

[4] Hugh Bradner, in Physics Division Quarterly Report, UCRL-8054, Nov. 1957, p. 9.

HIGH-MOMENTUM ANTINUCLEON EXPERIMENT

Rodney Cool,* Charles A. Coombes, Bruce Cork, Glen R. Lambertson, and William A. Wenzel

A proposal for a Bevatron experiment to measure the p-$\bar{p}$ cross section for $\bar{p}$ momenta of 1.4 to 2.2 Bev/c and at the same time to detect if possible the anti-Λ^0 has been made in a Bevatron report, Bev-200, of November 28, 1956 (revised December 30, 1957).

The cross-section measurements will follow previously used techniques, time-of-flight identification, and interactions in liquid hydrogen. The experiment to detect the antihyperon is described here in some detail.

The reaction producing the $\bar{\Lambda}^0$ is

$$p + \bar{p} \rightarrow \Lambda^0 + \bar{\Lambda}^0 \qquad (1)$$

The threshold is at about 1.45 Bev/c. The experimental arrangement is shown in Fig. 3.

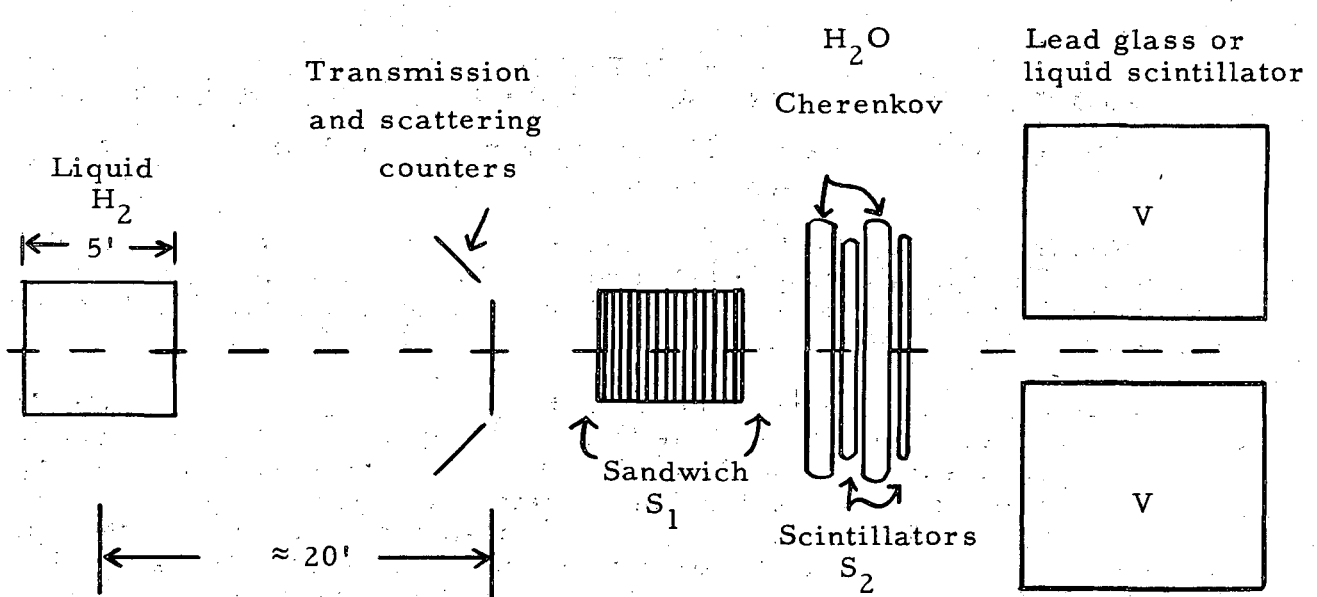

Fig. 3. Experimental arrangement for high-momentum antinucleon experiment.

Operation is as follows:

> Identified antiprotons transmitted by the hydrogen target and transmission counters enter a sandwich of plastic scintillators, each of which is about 8 by 8 inches by $\frac{1}{4}$ inch thick. There are to be 24 such scintillators placed close together in the sandwich. Behind the sandwich is a water Cherenkov counter about 12 by 12 by 4 inches. This is split in the middle and two plastic scintillators are inserted. Finally, behind the scintillator-Cherenkov sandwich is a volume detector for antiproton annihilation. This could be either a vat of liquid scintillator or lead glass. A hole through the center of this detector would let most of the fast-particle background in the beam escape, thereby reducing the background counting rate.

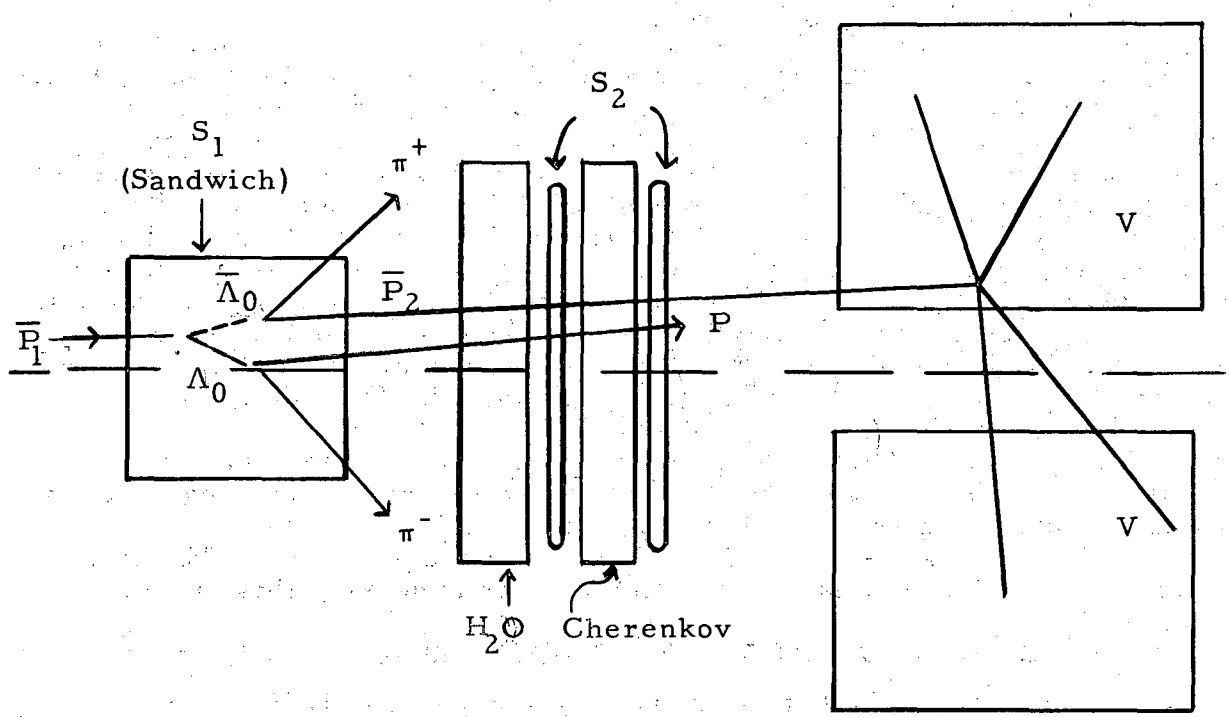

Fig. 4. $\bar{\Lambda}$ detection apparatus.

The signature of the Λ, $\bar{\Lambda}$ pair is as follows: The sandwich counters show passage of the incident antiproton up to the point where the Λ, $\bar{\Lambda}$ pair is made. After one or more counters show no charged particles, several counters show the passage of several charged particles (large pulse height). The $\bar{p}$ coming from the decay of the $\bar{\Lambda}^0$ is slow ($\approx$ 1 Bev/c), and does not

count in the Cherenkov counter C. It does, however, count in S_2, and it gives a large (annihilation) pulse in the large detector V.

By inserting sheets of various materials into the sandwich, we can measure the $\bar{\Lambda}^0$ production cross section as a function of atomic weight.

Many of the counters and much of the electronics for this experiment have already been used in previous experiments. Additional counters and circuits are being built.

THE STUDY OF K^+ MESONS IN THE PROPANE BUBBLE CHAMBER

Warren W. Chupp and Sulamith Goldhaber

We have participated in an exposure of the 30-inch propane bubble chamber in a separated beam of K^+ mesons. The chamber was exposed to two momenta of positive beam, i.e., 480 Mev/c and 424 Mev/c, respectively.

We scanned the pictures obtained in the 424-Mev/c momentum-selected beam. The method of scanning consisted of identifying a K meson in the first 10 inches of the full-size projection and following the selected particle along the track. The ionization of the K mesons at this momentum is considerably higher than that of the pions, so that K mesons can be easily distinguished from pions. The range of the K mesons at the above-mentioned momentum is such that they stop in the chamber, except for those that by scattering leave the top or bottom of the chamber. The purpose of this experiment was to obtain a differential cross section of $K^+ + H$ scattering, as well as the investigation of the K^+ charge-exchange process. To date we have found 14 $K^+ + H$ scattering events which, when combined with the data of Gerson Goldhaber et al.[5] give our isotropic angular distributions.

In the data obtained so far, not a single case of a neutral K meson has been seen. It was expected that in 42% of all charge-exchange scattering events a neutral K meson decaying by a charged decay mode, i.e., $K^0 \rightarrow \pi^+ + \pi^-$ with a mean life of $\sim 10^{-10}$ sec should be seen. The large size of the chamber yields a high efficiency for observing this process.

SEARCH FOR A PARTICLE OF MASS 450 m_e TO 650 m_e

Sulamith Goldhaber, Joseph J. Murray, Nahmin Horwitz, and David O. Caldwell[+]

A stack of photographic emulsion has been exposed to a positive beam that passed through an electromagnetic mass spectrometer[6] set for a mass

---

[+]Massachusetts Institute of Technology.

[5]This work has been carried out in conjunction with William B. Fowler, Gerson Goldhaber, Joseph Lannutti and Wilson M. Powell. The 30-inch propane chamber of William Powell was used in this experiment.

[6]A coaxial velocity spectrometer designed by Joseph J. Murray (and described by him in A Coaxial Static-Electromagnetic Velocity Spectrometer for High-Energy Particles, UCRL-3492, May 1957) was used in the system.

band 450 - 650 m_e. The central momentum of the beam was 250 Mev/c. The exposure was made to $\sim 10^7$ pions of this momentum. The rejection ratio was of the order of 100, so that the stack contained $\sim 10^5$ pions. To date one-third of the stack has been scanned. One particle has been found of $\sim$5 cm range for which ionization range and $p\beta$ range measurements indicate a mass of $\sim$500 m_e. Further measurements on this track are in progress.

PHYSICS RESEARCH

Burton J. Moyer in charge

NEUTRON SPECTRUM, ANGULAR DEPENDENCE, AND YIELD FROM 31.5-Mev PROTON BOMBARDMENT OF SELECTED TARGETS

Harold E. Adelson, Hoyt A. Bostick, and Charles N. Waddell

The collection of data for this experiment was completed in October 1957. Since that time there has been a steady program of data reduction, utilizing equipment previously described. Preliminary results have been presented in two contributed papers before the American Physical Society 1958 Spring meeting at Washington, D. C. Evidence for anisotropic angular distributions of neutrons from targets of nickel isotopes and cobalt has been obtained for energies within the energy range 5 to 25 Mev. This has been interpreted as indicating the predominance of reactions occurring near the surface of the target nuclei. Moreover, within this energy range the total yield of neutrons from nickel-58 is less than one-half that from nickel-60. This could account for the low total neutron yield of natural nickel reported by Tai et al.[1] for thick-target bombardments. Such a ratio may be explained on the basis of a shell model of the nucleus in which twice as many neutrons occupy unfilled outer shells in nickel-60 as in nickel-58. Data from targets of aluminum, melamine (nitrogen), and beryllium are being analyzed in an effort to determine the angular dependence of neutrons arising from transitions to separate levels of the residual nuclei. Preliminary evidence indicates that levels corresponding to known states of oxygen-14 can be seen. The data-analysis program is continuing.

PHOTON ENERGY SELECTOR

Robert J. Cence

The study of photonuclear reactions would be greatly facilitated if a monochromatic high-energy photon source were available. Accordingly, the development of a device to accomplish this has been undertaken, following Weil and McDaniel.

A scintillation counter, capable of high repetition rate, was installed in the Berkeley 340-Mev synchrotron within an appropriate lead shield near the internal target. The recoil electrons, from bremsstrahlung events in the target, were counted after being analyzed in the synchrotron guide field. By selection of a narrow band of recoil energies, the "tagged" photon beam was restricted to the energy band 250 ± 15 Mev, with an intensity of 10^7 photons per minute. Improvements are being made in order to increase the intensity and to narrow the energy-band width.

High-energy photoprotons from light nuclei will be studied with the monochromatic photon beam.

---

[1] Tai, Millburn, Kaplan, and Moyer, Phys. Rev. 109, 2086-90 (1958).

COSMIC-RAY NEUTRON EXPERIMENT

Wilmot N. Hess

The sea-level counting rates of the neutron detectors used in the cosmic-ray neutron measurements have been determined and the calibration of the detectors completed (including calibrating the large BF chamber in the cyclotron neutron beam). The cosmic-ray neutron spectrum from 1 Mev up to 1 Bev is now established. Attempts to extend the spectrum down to thermal energies show a discrepancy between the C^{14} content in the atmosphere and the counting rate of other detectors. We will try to explain this difference by using resonance detectors to measure the cosmic-ray flux in the ev region.

NEUTRON CROSS-SECTION MEASUREMENTS AT THE BEVATRON

Wilmot N. Hess

The total and absorption cross sections for neutrons of E > 4 Bev incident on Pb have been measured at the Bevatron. The values are $\sigma_t = 2.36 \pm 0.12$ and $\sigma_a = 1.57 \pm 0.10$ barns, giving a diffraction cross section $\sigma_d = 0.79 \pm 0.16$ barns. The absorption cross section is slightly lower than at 1.4 Bev (Brookhaven data) and the diffraction cross section considerably lower. This indicated nuclear transparency has increased with increasing energy, which is reasonable. The p-p cross section is smaller at 5 Bev than at 1.4 Bev and the wave length of the incident neutron is smaller. Both effects should increase the transparency. Attempts to fit the data by using the optical model demonstrate that a sharp-edge nucleus cannot be used, and calculations are under way using a diffuse-edge nucleus.

NUCLEAR EXCITATION FROM μ^--MESON CAPTURE IN MEDIUM AND HEAVY NUCLEI

Selig N. Kaplan

Preparations are under way for measurement at the 184-inch cyclotron of the nuclear excitation induced by a μ-meson captured at rest. Nuclear excitations between ~ 10 and 40 Mev result almost exclusively in neutron emission, and therefore the technique to be used involves the high-efficiency (~ 50 %) detection of neutrons emitted in association with μ-meson capture.[1] The neutron detector is an 85-gallon container of cadmium-loaded liquid scintillator. In November of 1957 we had a preliminary experimental run for the purpose of familiarizing ourselves with the techniques of obtaining a "clean" monochromatic μ-meson beam, and, in addition, to learn something about the intensity of background to which the large liquid scintillator tank would be exposed. By means of a scintillation-counter telescope, differential absorption data were obtained for a momentum-analyzed meson beam. In addition to this, a large plastic scintillator shielded with lead and paraffin was placed near the meson beam and its

[1] Selig N. Kaplan, Neutron Emission Following μ-Meson Capture in Silver and Lead (Thesis), UCRL-3749, April 1957.

counting rate during the beam pulse recorded. On the basis of the data obtained we estimated that we could operate the scintillator tank at a beam level that would give at least 1 to 5 events per minute.

An electronic counting system has been developed for recording the number of neutrons per event detected by the scintillation tank (in previous applications the data had been displayed on an oscilloscope face and photographed[1]). The neutrons are captured in the tank with a time constant of about 10 microseconds. Amplified pulses from the tank are put into a HP 520A prescaler, which is gated on for 30 microseconds, beginning at a time coincident with the assumed production of the neutrons. At the end of the gate the number of counts on the prescaler are read out by an auxiliary electronics circuit (circuit Diagram 2X9083), translated into a pulse height, and fed into a 10-channel pulse-height analyzer. The pulse-height analyzer then records the number of pulses counted during the gate, if it was between 0 and 9. If there were more than 9 pulses a count is recorded in the surplus channel. In order to adequately shield the tank it has been surrounded by 2-inches of lead and 3/4-inch boric acid, and then mounted in the concrete shielding wall between the meson cave and the medical cave in the cyclotron. With this arrangement preliminary background measurements indicate we shall be able to run at an even higher beam level than previously expected. We expect to be ready for experimental running at the cyclotron sometime in June.

K^0-MESON PROBLEM

Sherwood I. Parker

The charged counter telescope used to study the reaction
nucleon + nucleon $\rightarrow$ strange particles + (by decay) charge pions
at the Bevatron is being calibrated for different angles and energies of incident pions by placing it in a pion beam from the cyclotron.

An evaluation of the data from the Bevatron is in progress, out of which should come information on the branching ratio between charged and neutral decay modes for the K^0_1 meson, the angular distribution of the K^0 mesons in the production reaction, and the relative yield from p-p and p-d collisions.

SEARCH FOR H^5

Robert J. Cence and Charles N. Waddell

The possible existence of H^5 was suggested by Blanchard and Winter. This possibility is being investigated by attempting to observe the reaction

$$Li^7\ (r,\ 2p)\ H^5 \xrightarrow{\beta^-} He^{5*} \longrightarrow He^4 + n.$$

Delayed neutrons are predicted to demonstrate a 10-msec lifetime, and the beta transition is expected to have a maximum energy of 19 Mev.

Neutrons from the target are moderated in a hydrogenous medium and counted in BF_3 counters. A Li^7-Li^6 difference in delayed neutron yield is a positive identification of H^5. Purified Li^7 and Li^6 isotopes were used, and no significant difference was observed in the lifetime range between 3 msec and 100 msec.

ANTINEUTRON EXPERIMENT

Burton J. Moyer

The previous attempt at identifying a beam of antineutrons which would be used for cross section measurements involved the expected reaction

$$p + p \rightarrow \overline{N} + He^3 .$$

An estimate of the yield of the reaction indicated that it might be sufficiently great to allow identification of antineutron production and trajectory by means of specific identification of He^3 particles. This attempt was not successful with the instrumentation employed, and it is not yet known whether He^3 production is large enough to make this a useful means of identifying antineutrons and defining their trajectories.

Another attempt is being prepared in which the approach will be completely different. A neutral beam defined at 15° from the Bevatron target will be passed through a "charge-exchange counter" in which a fraction of the antineutrons that may exist in the neutral beam can be converted into antiprotons. Subsequent to the charge-exchange counter a quadrupole focusing magnet produces an array of images of the charge-exchange counter dispersed according to negative-particle momentum. Prior to the formation of these images the beams emerging from the quadrupole focusing system are deflected by a uniform magnetic field, so that the image points are distributed in an array which can be received by a row of glass Cherenkov counters in which the antiprotons can deliver characteristic pulses by annihilation. Momenta between 1 and 2 Bev/c will thus be concurrently counted. Essential in this system are the means for insuring the neutral character of particles ahead of the charge-exchange counter and, subsequently, the discrimination between antiprotons and other negative particles emerging from the charge-exchange counter. The principle negative particle to be discriminated against is the π^- meson. This discrimination is being attempted by means of a high-pressure temperature-controlled vapor atmosphere Cherenkov counter.

The experiment is being laid out in such a way that if antineutrons are successfully detected by this means attenuation experiments can be done in the neutral beam preceding the charge-exchange counter.

CLOUD CHAMBER STUDIES

Wilson M. Powell in charge

Material for this section had not been received at the time of publication, but may appear in a subsequent report.

PHYSICS RESEARCH

Emilio Segrè in charge

ANTINUCLEON EXPERIMENTS

Lewis E. Agnew, Jr., Tom Elioff, Louis Gilly, Gerson Goldhaber, Emilio Segrè, Herbert M. Steiner, Clyde Wiegand, and Tom Ypsilantis

A purified beam of antiprotons, which is an improvement of the beam engineered and obtained in December 1956, was used for two experiments. The purification is based on magnetic deflections and absorption only. The layout of the apparatus is shown in Fig. 5 and the essential data of the components are given in Table I.

Table I.

Components of the apparatus	
T	Bevatron target for production of antiprotons (Be, $\frac{1}{2} \times \frac{1}{2} \times 6$ inches long)
M_1, M_2, M_3	Deflecting magnets; 15°, 40°, and 26° bending respectively.
Q_1, Q_2, Q_3	Quadrupole focusing magnets of 8-inch aperture.
M_4	Deflecting magnet used in emulsion exposure
E	Emulsion stack
BC	30-inch propane bubble chamber
A_1	Be absorber; 32 g/cm^2 (for bubble chamber beam)
A_2	Absorber consisting of 9.4 g/cm^2 Be, 3.6 g/cm^2 (for bubble chamber beam)
S_1	Plastic scintillation counter : $3\frac{1}{2} \times 3\frac{1}{2} \times \frac{1}{2}$ inches thick
C_1	Cherenkov counter, H_2O radiator $4 \times 4 \times 2$ inches thick
F_1	Fitch-type Cherenkov counter: CS_2 radiator 4 inches diameter $\times 2\frac{1}{4}$ inches thick.
S_2	Plastic scintillation counter: $7\frac{1}{4} \times 2\frac{1}{2} \times \frac{1}{4}$ inch thick.
P_b	Lead collimators

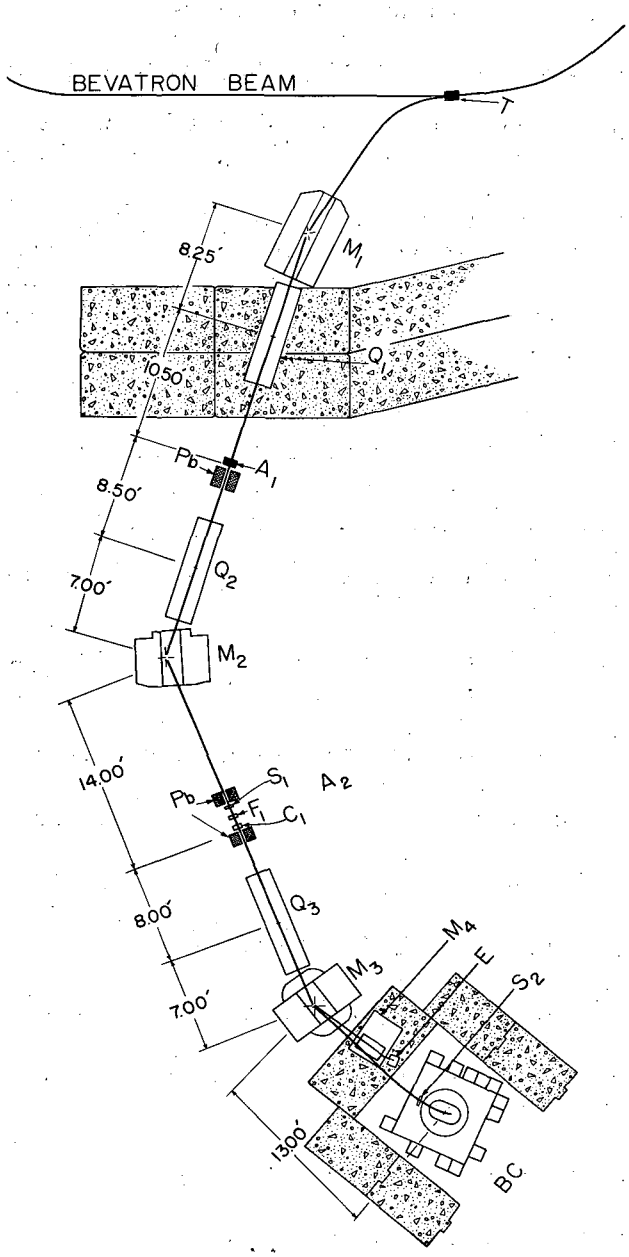

Fig. 5. Apparatus for antinucleon experiment.

The performance of the apparatus is summarized in Fig 6. At the end one obtains (as a example) a ratio of antiprotons to background particles of $1:1.5 \times 10^4$ for an antiproton momentum of 684 Mev/c. The background particles are 87% μ^-, 10% π^-, and 3% electrons, as shown by their interactions in photographic emulsions and bubble chambers. A system of counters announces the arrival of an antiproton at the end of the apparatus if this is needed.

This apparatus was used to irradiate stacks of photographic emulsions--three for our own use, and one each for use at Rome, Los Alamos, Bristol, Rochester, Urbana, and Uppsala. In cooperation with the Wilson Powell group we have also sent antiprotons into the propane bubble chamber, taking a picture whenever an antiproton was announced electronically. About 400 antiprotons have been identified.

The analysis of these pictures is still in progress and we can give only preliminary results. We shall obtain from them information on hydrogen and carbon scattering in the energy region 10 to 200 Mev, and information on the modes of annihilation in carbon and hydrogen at rest and in flight.

Preliminary results concerning hydrogen are contained in a letter to the Physical Review; Agnew, Elioff, Fowler, Gilly, Lander, Oswald, Powell, Segrè, Steiner, White, Wiegand, and Ypsilantis, "$\bar{p}$-p Elastic and Charge-Exchange Scattering at About 120 Mev." Preliminary results concerning carbon are given in a report by Agnew, Elioff, Fowler, Gilly, Lander, Oswald, Powell, Segrè, Steiner, and White, Elastic Scattering of Antiprotons on Carbon at 30 to 200 Mev (submitted as a Letter to the Editor of the Physical Review).

EXPERIMENTS AT THE CYCLOTRON

Herbert M. Steiner, Clyde Wiegand, and Tom Ypsilantis

Some of the experiments reported in preparation--such as angular correlation of polarization in p-p scattering (Larsen), and a deuteron-polarization study (Button)--have been tried with different degrees of success; the main difficulties are intensity and background.

The experiment on the measurement of the sign of the μ-meson polarization has been thus far unsuccessful.

A very good pion beam has been formed (Rogers, Foote) which has allowed study of the polarization of the recoil protons in π^+-p collisions. This beam is an important development, and the arrangement for obtaining it is indicated in Fig. 7. It is hoped that it will be used for several experiments, such as a detailed study of $\pi^\pm$ collisions with protons, to check the dispersion relations; and study of Coulomb-nuclear interference for C - $\pi^\pm$ scattering at energy higher than the 3/2-3/2 resonance, as suggested by Professor Kenneth Watson.

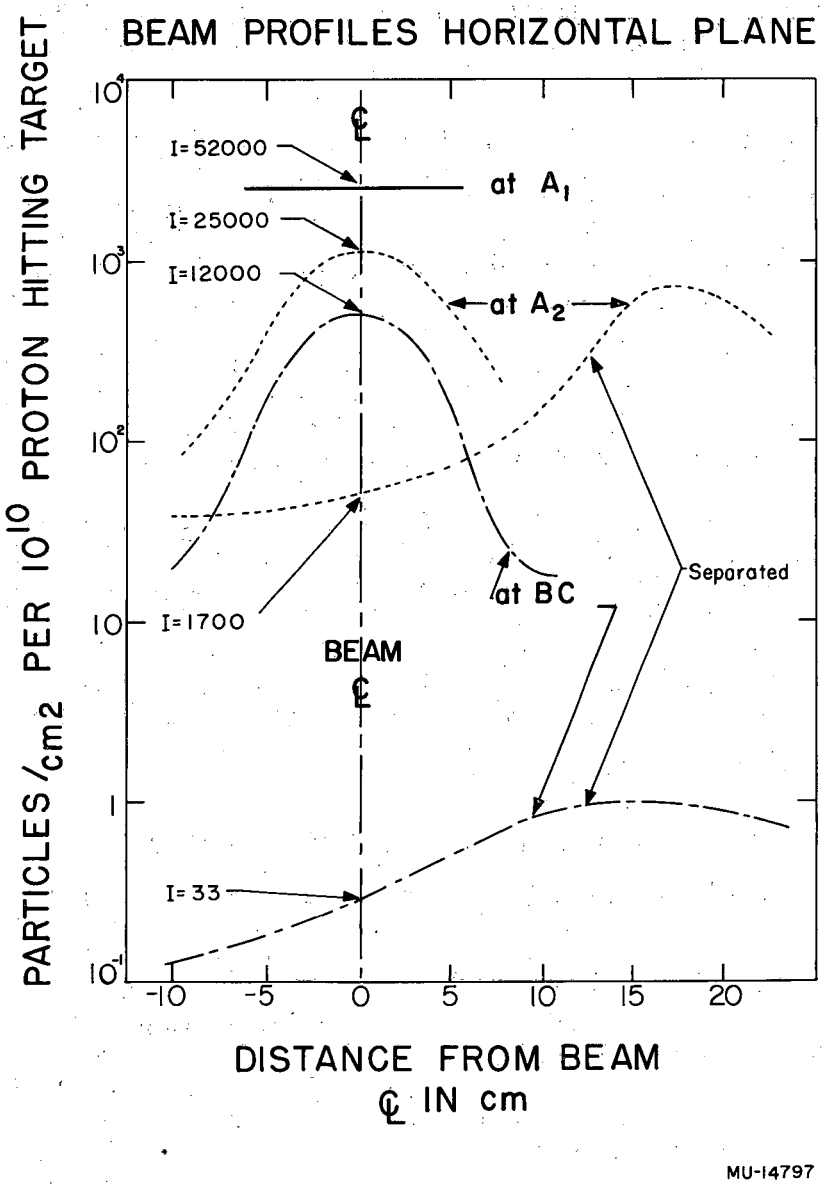

Fig. 6. Summary of performance of apparatus in antinucleon experiment.

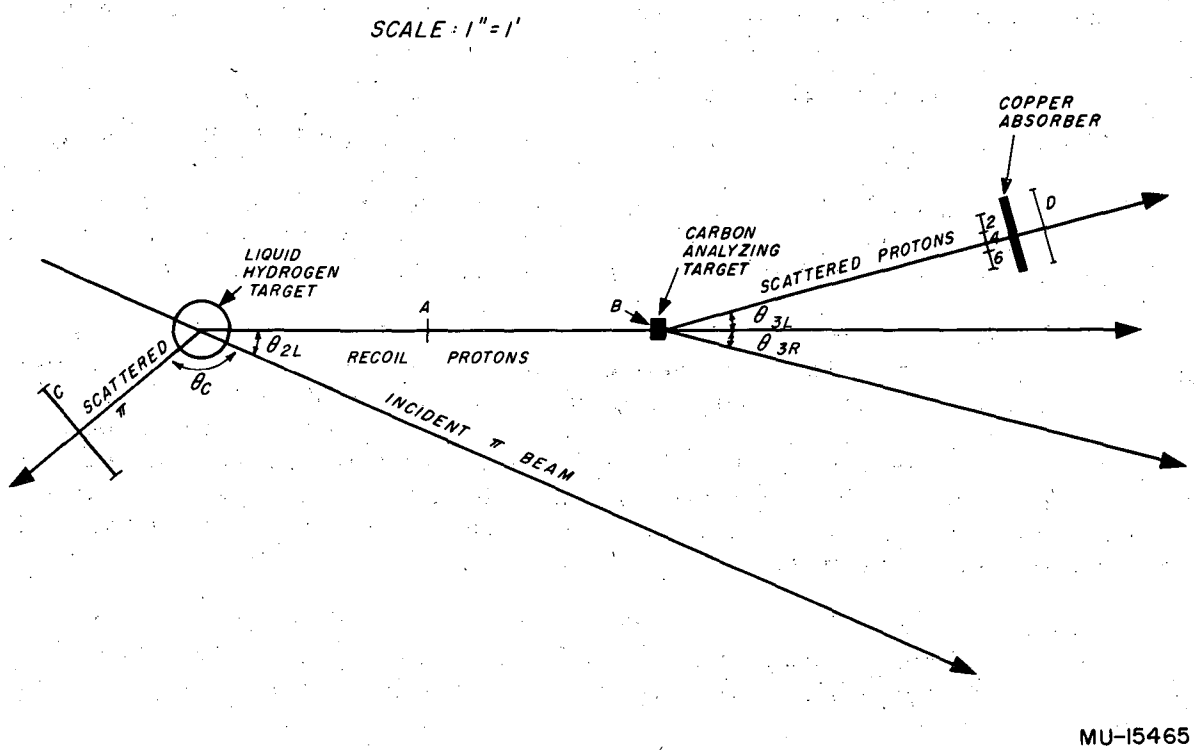

Fig. 7. Experimental arrangement for the measurement of the polarization of the recoil proton in π^+-p scattering. A, B, C, 2, 4, 6 are scintillation counters.

BEAM-PROFILE INDICATOR

Clyde Wiegand, Dick Mack, and William Jackson

An apparatus for displaying the intensity distribution in external charged-particle beams is under construction. The sensitive element is a row of 21 scintillators each 1 cm by 1 cm. The number of particles that pass through each element will be displayed as a histogram on a slow-sweep-speed oscilloscope. The apparatus is expected to decrease the time required for setting up externally deflected and focused beams.

Similar techniques are being developed to identify electronically particles that enter bubble chambers, and as a general detecting scheme.

STUDY OF ANTIPROTONS IN NUCLEAR EMULSION

Gerson Goldhaber, Theodor Kalogeropoulos, and Rein Silberberg

The analysis of 220 antiproton stars obtained from exposures to a separated antiproton beam in 1956-1957 is nearing completion. Details on the exposure and preliminary results have been given previously.[1]

A new exposure was made in January 1958 with the "doubly separated" antiproton beam. In this beam we exposed two stacks. Stack 88 was made up of 3X diluted gelatine Ilford G.5 emulsions. Stack 89 was made up of Ilford K. 5, the new fine-grain emulsions. The purpose of these exposures is to study the interactions of antiprotons with light and heavy elements by comparing results with diluted and normal-density emulsions. The fine-grain emulsions are used to study double stars in detail; indications of such events have been observed previously.

To date more than 200 new annihilation stars have been found in Stacks 88 and 89 and a total of about 800 is estimated to be available. Results on $\bar{p}$-H interaction and elastic scattering have been submitted for publication.[2, 3]

---

[1] Chamberlain, Goldhaber, Jauneau, and Segrè, in Physics Division Quarterly Report, UCRL-3914, Aug. 1957, p. 33; Goldhaber, Kalogeropoulos, and Silberberg, op. cit. p. 43; Chamberlain, Goldhaber, Jauneau, Kalogeropoulos, Segrè, and Silberberg, in preliminary (multilithed), - "Communicazioni," International Conference on Mesons and Recently Discovered Particles, Padua-Venice, September 1957, p. VI-10.

[2] Goldhaber, Kalogeropoulos, and Silberberg, Antiproton-Hydrogen Scattering and Inelastic Scattering from Complex Nuclei (submitted as Letter to Editor of Physical Review).

[3] Gerson Goldhaber and Jack Sandweiss, Elastic Scattering of Antiprotons from Complex Nuclei (submitted as Letter to Editor of Physical Review).

THE INTERACTION OF K^+ MESONS WITH HYDROGEN AND CARBON*

Gerson Goldhaber and Joseph E. Lannutti†

We have participated in an exposure of the 30-inch propane bubble chamber to a separated K^+ beam at the Bevatron. The aim of this experiment is to measure the K^+-hydrogen cross section and K^+-carbon cross section, with particular emphasis on the charge-exchange process. We have scanned to date ~4,000 pictures made with 470-Mev/c K^+ mesons incident on the chamber. The scanning procedure consists of picking up K^+-meson tracks in the first half of the chamber and observing their interactions in the second half of the chamber. This method serves to eliminate π mesons and other minimum-ionizing particles. Further curvature measurements are needed to eliminate protons. Twenty-one K-H scattering events have been found.

When these events are combined with 14 found in the 420-Mev/c K^+ beam the distribution appears isotropic and does not exhibit a drop in the backward direction.

PUBLICATIONS IN COOPERATION WITH OTHER GROUPS

The following papers, recently published, report work done in cooperation with groups at other laboratories.

Lannutti, Goldhaber, Goldhaber, Chupp, Giambuzzi, Marchi, Quareni, and Wataghin, Study of the Interactions of K^+ Mesons, Phys. Rev. 109, 2121 (1958).

Igo, Ravenhall, Tiemann, Chupp, Goldhaber, Goldhaber, Lannutti, and Thaler, Phys. Rev. 109, 2133 (1958).

Webb, Iloff, Featherston, Chupp, Goldhaber, and Goldhaber, Properties of K^- Mesons (submitted to Nuovo cimento).

---

*Work carried out in conjunction with Warren W. Chupp, William B. Fowler, Sulamith Goldhaber, and Wilson M. Powell.

†Now at Florida State University, Tallahassee, Florida.

ARC RESEARCH

Chester M. Van Atta in charge

Material for this section had not been received at the time of publication.

ACCELERATOR OPERATION AND DEVELOPMENT

BEVATRON

Edward J. Lofgren in charge

A report for November, December 1957, January 1958 has been issued separately under the title "Bevatron Operation and Development, XVI," UCRL-8261, and the report for the period February, March, April 1958 (XVII) will be UCRL-8334.

184-INCH CYCLOTRON

Robert L. Thornton in charge

Reported by James T. Vale

At the 184-inch cyclotron three significant installations have been made during this period: (a) an rf range-changing capacitor for switching from alpha-deuteron operation to proton operation; (b) beam stoppers in the external beam tubes; (c) a focusing magnet of the quadrupole type between the cyclotron and the meson cave. These pieces of equipment were installed in November, 1957.

a. Range-Changing Capacitor

The rf frequency sweep of the cyclotron necessary to accelerate protons is approximately from 36 Mc to 17 Mc, and to accelerate either deuterons or alpha particles is approximately from 18 Mc to 13.5 Mc. The acceleration time of the alpha particles, therefore, was considerably shorter than that for protons. This, of course, was realized in the beginning, and provision was made in the original design of the vibrating blades to add fixed capacity in parallel with the vibrating blades to lengthen the time of acceleration in

the alpha-particle range. The mechanism to add or subtract this fixed capacity was housed inside the stator associated with the vibrating blades and at that time was inside the rear end of the dee. Capacitor plates were moved to mesh or unmesh with corresponding plates between the two blades of one set of vibrating reeds. Later in the development of the vibrating reeds, it became necessary to mount the stators from the base of the vibrating reeds and, consequently, the capacitor mechanism had to be scrapped. It was believed, however, that the alpha-particle acceleration time could be lengthened by adding capacity in a more accessible location, such as the rear of the dee that was not occupied by the vibrating reeds. The solution seemed so simple and straightforward that the more complicated and important problem of development of a regenerator for extracting the beam was concentrated on. The external beam was developed with protons and after that had been accomplished, it was found that the dee rf voltage that was needed to accelerate alpha particles was considerably higher than could be obtained. Since the medical program needed alpha particles for its work, the problem of lengthening the acceleration time was undertaken. The simple solution did not work. It was found that the only practical location for the padding capacitor was inside the vibrating blades, and this necessitated a period of design and development.

In order to get the medical program going as soon as possible, a temporary capacitor was built that could be installed by opening the vacuum system and inserting the capacitor. A pumpdown was then necessary. To remove the capacitor, a second opening of the vacuum tank and a second pumpdown were necessary.

During this period a permanent solution was also being designed and developed. This consisted of a movable "fixed" capacitor that could be operated from the outside of the vacuum tank without destroying the vacuum.

The fixed capacitor is now operated by "air" pressure on double-acting pistons to move the capacitor plates. The vacuum seal is made with sylphons. Dry nitrogen is used instead of air, however, to prevent deterioration of the leather cups used as pistons.

The change of the rf system from the proton-acceleration range to the alpha or deuteron range now takes a maximum of 15 minutes.

b. Beam Plugs

In the interest of personnel safety, it was considered necessary to insert a plug in the beam tubes whenever it was possible for anyone to be in the external beam caves. Consequently, movable plugs operated by air pressure, were built and installed, in the vacuum pipes leading to both the medical and the physics caves. These are controlled by the cave doors. Whenever a cave door is opened, the beam plug is automatically moved into place, thus isolating that particular cave from the cyclotron.

c. Focusing Magnet

A focusing quadrupole magnet was built and installed between the cyclotron and the meson wall cave. Since space here is quite limited, a two-section magnet was designed for this area instead of the usual three-section one. It rolls on tracks and is pivoted so that it can be aligned with most of the meson trajectories coming out of the cyclotron and going into the meson cave. Considerable interference was encountered because of the confined space, and it was necessary to replace two of the tank-port covers with re-entrant types to provide clearance for the quadrupole magnet.

Operation of the cyclotron has become quite reliable as "bugs" have been eliminated from the equipment, particularly the vibrating-reed chassis. Innage in the past three months has been about 95%.

60-INCH CYCLOTRON

W. B. Jones in charge

DEVELOPMENT

Probe-Oscillating Mechanism

Roy F. Burton

The Crocker Laboratory 60-inch cyclotron group has developed a new "shaker" device that oscillates the probe targets in the vertical plane, thus presenting a large surface area to the cyclotron beam. We have been limited in beam intensity by target damage due to the beam. This problem could be of the nature of thermal or radiation breakdown, but in either case we feel that a cure can be effected by increasing the area of the target exposed to the beam. The first test experiment was performed with a copper probe target bombarded with alpha particles. The beam was limited to 500 microamperes, and the target was oscillated at approximately 2 cycles per second. There was no damage of the target due to bombardment, whereas in previous irradiations at this beam level, the copper had been melted. We are contemplating further experiments with different probe targets, using this device.

The mechanical units consist of a swivel seal plate assembly and drive mechanism. (See Fig. 8.) A swivel vacuum seal with a 50° conical movement, as described in detail in an earlier report,[1] was used. In addition, a retaining plate that limits direction to an up-down motion was installed. The seal plate unit is presently designed to take any probe shaft diameter up to 3/4-inch.

The drive unit is a simple rotating shaft and arm. Spherical bearings in the arm ends take care of any misalignment in the up or down position. The arm is tied to the shaft eccentrically, and varying lengths of up-down motions can be obtained by relocating the eccentric in relation to the drive axis.

Vacuum-Gate Mechanism

A new vacuum gate has been developed and installed on the northwest port of the 60-inch vacuum tank. Previously, this port served only as a fixed viewing window. The new assembly has the added advantage of offering a new direction of access into the main chamber, for inserting tools and operational mechanisms while maintaining tank vacuum.

The design of this unit follows several already in use on the Los Alamos 42-inch cyclotron. It has been modified to meet the special requirements and space limitations of the 60-inch cyclotron. See Fig. 9. It consists of a

[1] Charles Corum and W. B. Jones, in Physics Division Quarterly Report; UCRL-3593, Nov. 1956, p. 40-41.

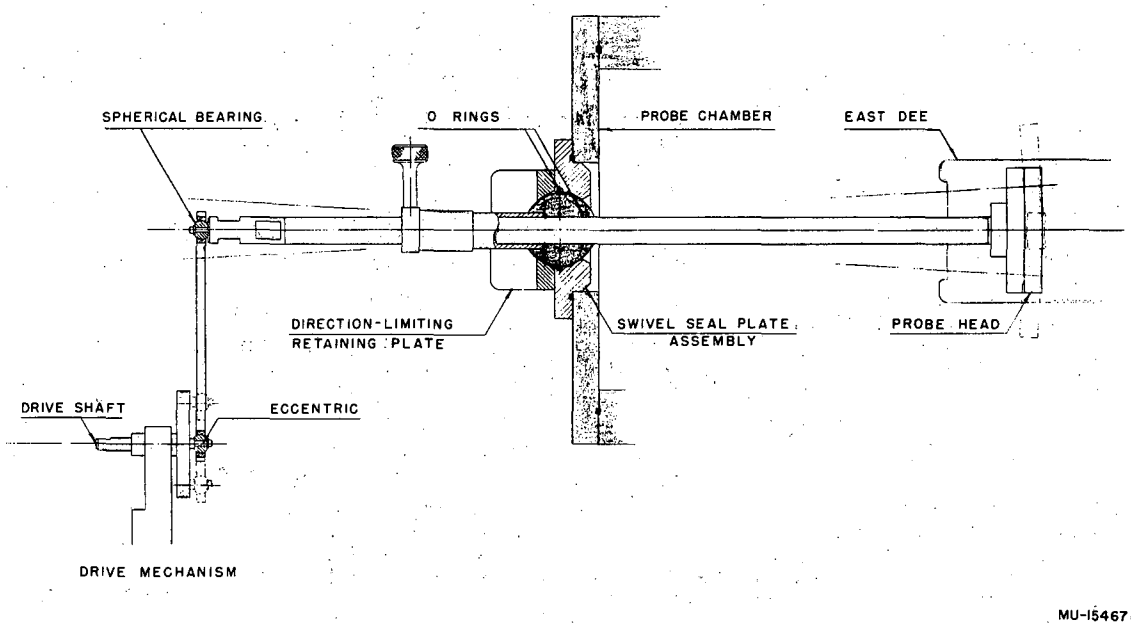

Fig. 8. Probe-oscillating mechanism.

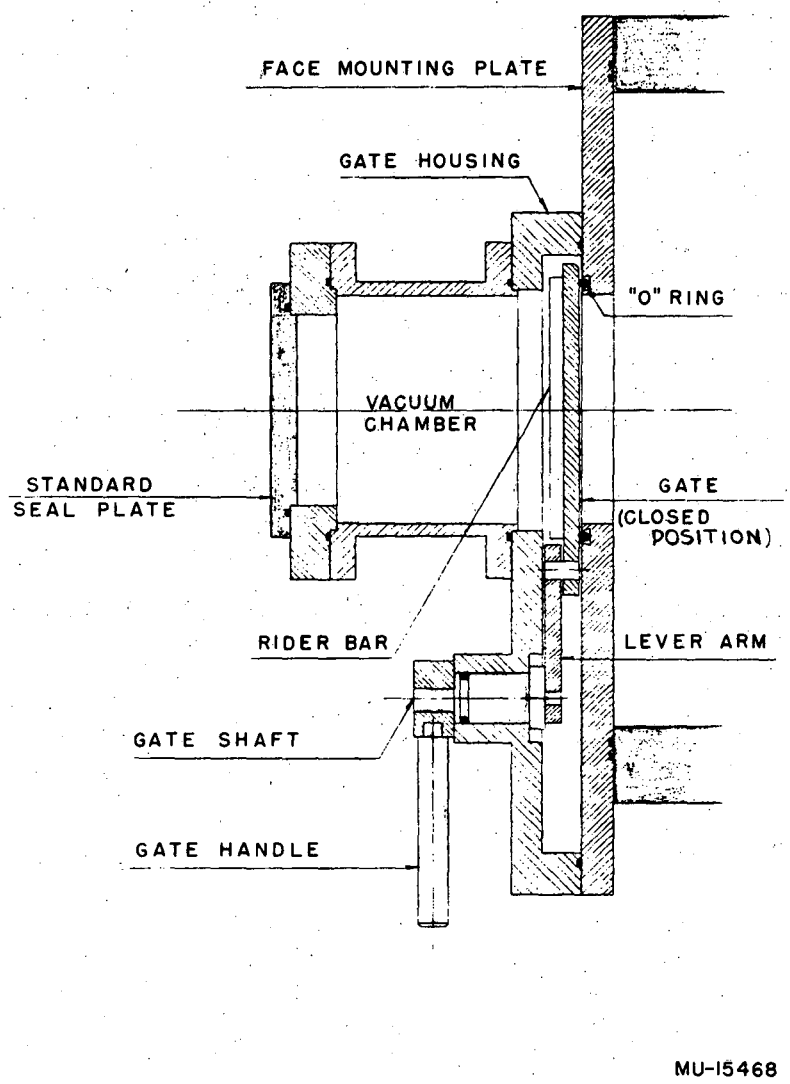

Fig. 9. Vacuum-gate mechanism.

permanently mounted face plate containing an O ring, and gate housing. The gate makes a sliding seal against the O ring, and rider bars maintain the pressure of the gate against the O ring. The gate is opened and closed manually with 180° rotation of the gate shaft. Adapter plates may be added to the gate vacuum chamber to meet various needs, or the chamber can be removed and replaced with a viewing window.

Air-Driven Water Door

Roy F. Burton

The north water door is the most advantageously placed for access to the target and probe chambers in the cyclotron room. However, because of its great weight (7500 lb) and size (4 by 5 by 8 ft), it has always been a two-man job to open and close it manually. Recently, in conjunction with other proposals for readapting the alleyways around the cyclotron, we decided to power-operate this door and increase its usefulness. Air was chosen as the means of power, because it was available and controllable. A motor drive would have required either an overhead track or one located in the concrete floor, which would have called for outside assistance. Figure 10 indicates the operation of the air-drive unit.

The basic air-drive unit consists of a 2-way air cylinder operated by a 4-way control valve. Both components are available commercially, but because of space limitations and other special needs, we designed, fabricated, and installed this drive unit, using our own facilities.

The air cylinder was mounted at one end to the top of the door, and the piston rod was attached to a ball hitch suspended from the ceiling. This permits it to align itself in travel. An additional roller bracket was installed for support when the door is open.

The control valve was mounted on the inside of the door with a connecting shaft extending through the door to a push-and-pull hand knob on the outside. The door moves in the same direction as the knob is moved; compressed air is introduced into one end of the cylinder while being exhausted from the other end. The valve plunger is spring-loaded at both ends to return it to a state of equilibrium, and acts as an air brake when the handle is released. Also, it is made in two parts, with a stiffer center spring which enables a person in the doorway to override anyone opening the door from the other side.

OPERATION

Radiation and Beam vs Magnet Resonance

John L. Wood

A preliminary survey of radiation vs magnet resonance was made at the 60-inch Cyclotron to correlate radiation levels and cyclotron parameters.

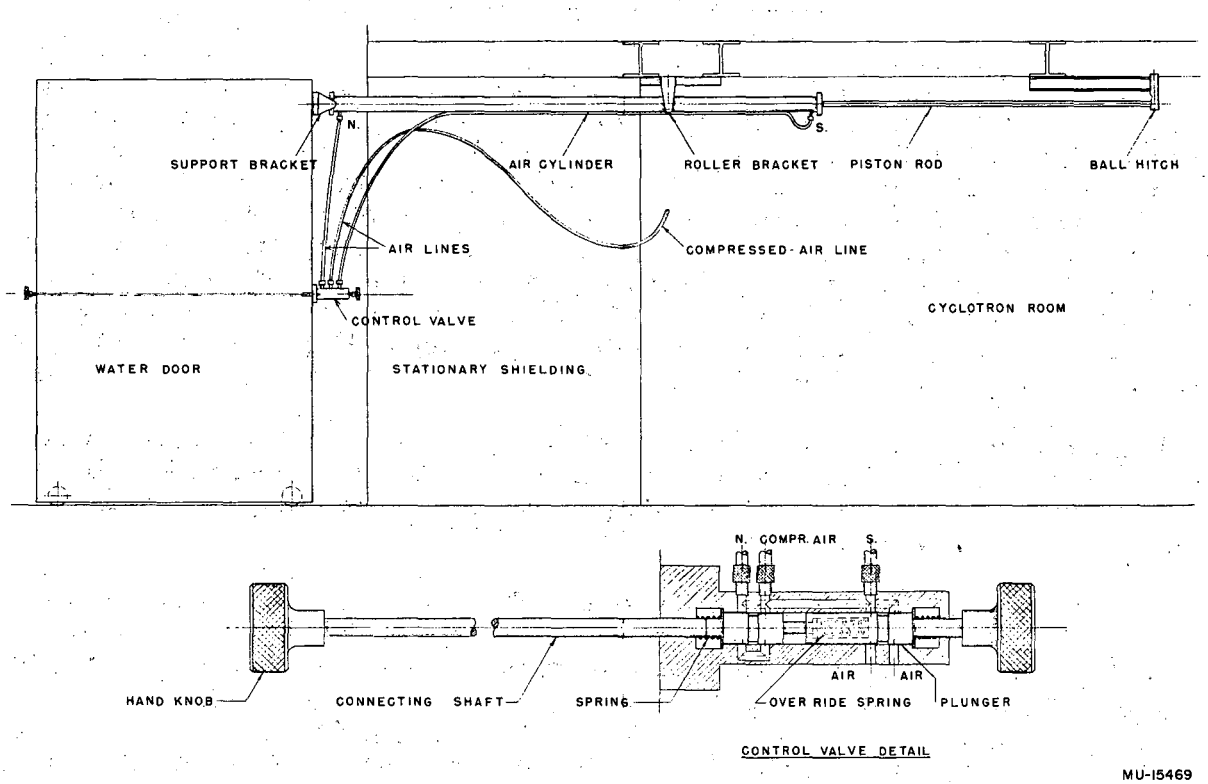

Fig. 10. Air-driven water door.

An ionization chamber was used.[1] It was placed on the median plane of the machine 1 meter away from a Be target. The radiation level during the runs was recorded on a Leeds and Northrup recorder using 3-cycle semilog paper. A synchronous clock motor was used to run the magnet fine tuning from 650 to 600 amp. The recorded information was plotted against the magnetic field; the data for the various power levels were superimposed (Fig. 11). The cyclotron background was allowed to decay to ~150 mr before each run was made.

The machine was peaked at an external beam of 45 to 50 μa of alpha particles at 86 kw; the target was a standard Be target. Two separate runs were made; one with the deflector off, and the other with the deflector resonating. Low, medium, and high oscillator power levels were used for the runs in Fig. 10, and one run was made at 86 kw with the deflector resonating at 16 kv (Fig. 11).

Figure 11 shows the radiation level vs magnetic field (H) with the deflector turned off. At tap zero (45 kw oscillator power) the radiation level is lower by a factor of 10^2 to 10^3 than when an internal bombardment is made. As the power is increased, the radiation level becomes comparable to the levels of low-intensity external bombardments. Two peaks are present; the residual proton and deuteron beam at the higher magnetic field, and the alpha-particle resonance peak to which the machine was peaked immediately before starting the runs. The resonance shift was due to frequency drift at various power levels.

Figure 12 illustrates the beam level and the radiation level, using the same machine parameters as in Fig. 11, with the deflector resonating. The alpha beam during this run was extracted, and bombarded the Be target. Again the two radiation peaks can be seen, with the external beam peaking at the lower-resonance radiation peak. No beam was sighted at proton and deuteron resonance, as the arc of the machine was tuned to produce alpha particles. However, a radiation peak can be seen due to an internal circulating beam of residual protons and deuterons. It may be noted that the gamma radiation when the oscillator is off resonance is on the order of 150 mr.

In conclusion, it can be stated that 99% of the radiation observed in the cyclotron area is due to the circulating beams of alpha particles, deuterons, or protons at their magnetic resonances.

Operations Summary

Summary of operations as prepared by Peter McWalters for this 6-month period:

---

[1] Kenneth D. Jenkins, Wide-Range Beta-Gamma Dose-Rate Meter, in Physics Division Quarterly Report, UCRL-3689, Feb. 1957, p. 40.

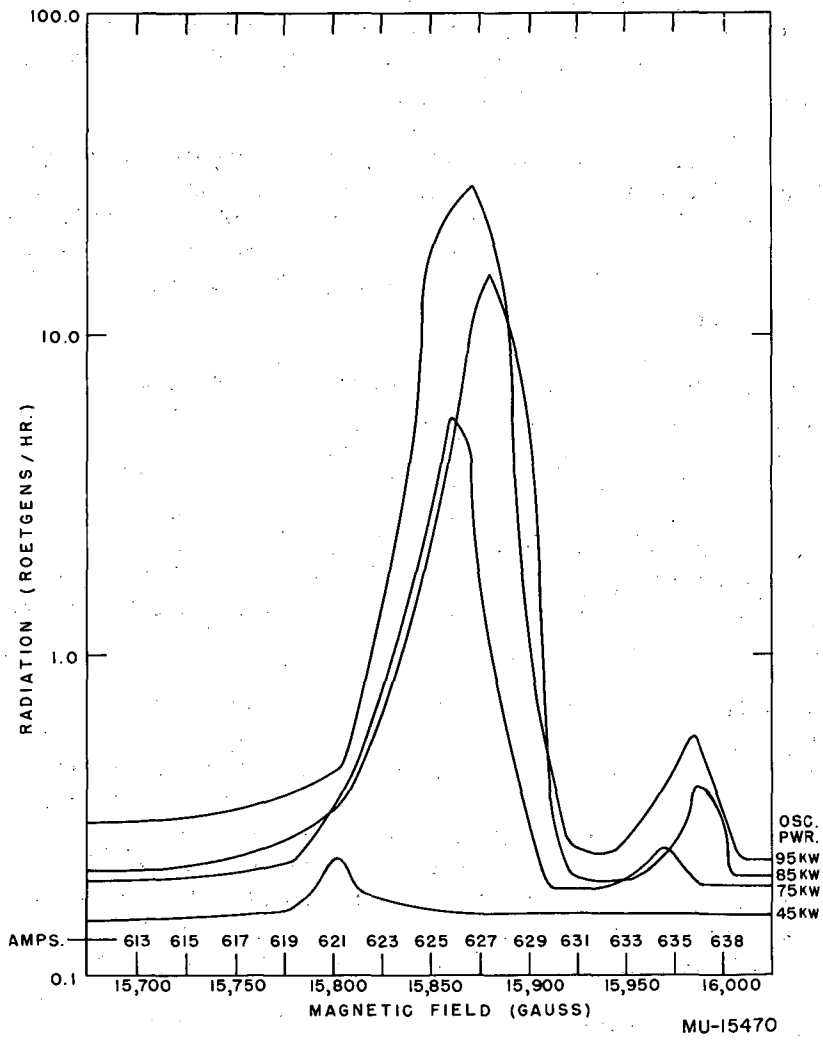

Fig. 11. Radiation at the 60-inch cyclotron as a function of magnetic field, oscillator and arc on, deflector off. Data for various power levels superimposed.

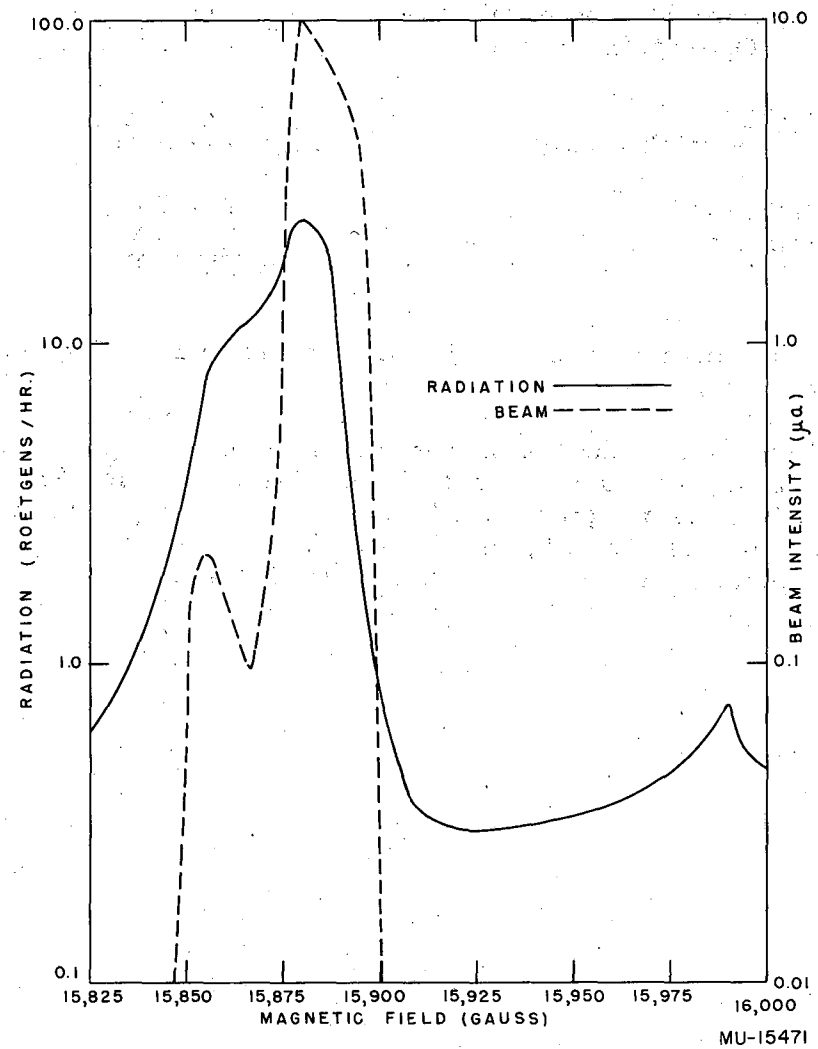

Fig. 12. Beam level and radiation level at the 60-inch cyclotron as functions of magnetic field. Deflector oscillating at 16 kv.

Alpha bombardments	1,319.5 hr
Proton bombardments	162.1 hr
Deuteron bombardments	542.1 hr
Experimental bombardments	147.4 hr
Operational total	2,171.1 hr
Outage	263.2 hr
Available time	2,434.3 hr
Shutdown	1,797.7 hr
Holidays	112.0 hr
	4,232.0 hr

An operating efficiency of 89.2% was maintained throughout this 6-month period.

During this period, the bombardment time totaled 2,171 hr. The Radiation Laboratory accounted for 85.5% of this time; the Physics group used 43.2%; the Chemistry group used 35.1%; and other groups used 7.2%. Of the non-Radiation Laboratory users, the U.S. Naval Radiological Defense Laboratory accounted for 6.1%, and others used 8.4%.

HEAVY-ION LINEAR ACCELERATOR

Chester M. Van Atta in charge

DEVELOPMENT AND OPERATION

Edward L. Hubbard

During the period November through April the accelerator was normally scheduled to operate at full energy 72 hours a week, and 8 hours a week were reserved for modifications and maintenance. From December 10 to 13 a 14-Mev N beam was produced for Coulomb excitation experiments. Scheduled shutdowns for installation of electrical control circuits and for maintenance occurred during the week of December 16 to 20 and on March 7. At the beginning of the period the accelerator actually operated 50% of the scheduled time and at the end of the period 65%.

Running time on the machine was divided between groups of experimenters as follows:

Chemistry		79%
Heavy-element production	39%	
Coulomb excitation	18%	
other	22%	
Physics		12.5%
Medical Physics		8.5%

Major improvements completed were a system to servo the frequency of the master oscillator to that of the poststripper cavity, installation of a standby compressor for the -40°F refrigeration system, and addition of a shielding wall that allows setting up of experiments during chemistry bombardments.

A more detailed record of the operation can be found in the monthly log summaries.

LINEAR ACCELERATOR

James Donald Gow in charge

The test runs on the linear accelerator preparatory to transfer of the machine to USC were completed. Disassembly was begun in February, with shipment scheduled for May. There will be no further reports on linac activities.

SYNCHROTRON

OPERATION AND DEVELOPMENT

Rudin M. Johnson in charge

The synchrotron has been used for physics research experiments during this period except for a week's tear-down in mid-November. The beam intensity has been high, 1.5×10^9 electrons per pulse at full energy (340 Mev), when needed.

The November tear-down was necessary because of low beam intensities caused by electron charging of portions of the inside of the quartz vacuum chamber. The changing seemed to take place on a thin varnishlike film which covered otherwise conducting silver paint. A spare newly painted quartz vacuum chamber replaced this chamber.

In December an electron beam-induction electrode was tried as a possible means of monitoring the circulating electron beam in the synchrotron. No positive results were obtained because (a) the large spray of electrons at injection time saturated the monitor electrode at injection time, and (b) the circulating beam at 100 Mev and more radiated enough ultraviolet light to cause photoemission from the monitor electrode. Further work is being carried on to try to circumvent these difficulties.

A thin (0.001 in.) platinum target was installed in the machine in January for Cence's monoenergetic γ-ray beam experiment. This thin target was necessary to reduce electron scattering in the target.

The peak energy of the γ-ray beam from the synchrotron was varied from 120 Mev to 340 Mev in 30- to 40-Mev steps for Goodwin's π^0-as-a-function-of-(A) experiment in February and March.

The Waddell-Cence investigation for H^5 required a synchrotron beam pulse every other magnet pulse (i.e., 3 pulses per second). This was accomplished by operating the synchrotron at the normal 6-pps rate and gating the rf oscillator trigger off every other pulse.

A new target-positioning mechanism has been installed which allows the target to be adjusted without disturbing the flux bars. The electron linear accelerator No. 2 was used intermittantly during this period.

The spectrometer magnet was calibrated for Jean Futrell by use of floating-magnetic-wire methods. Futrell ran a number of bombardments on cis-1, 2-dichloroethylene at 4.3 Mev.

The Varian klystron type VA87C developed a short in its cathode after approximately 400 hours' filament operation and was repaired by Varian at a cost of $3000. Our spare klystron went gassy soon afterwards but we were able to borrow a spare from Site 300. The repaired klystron ran for about 100 hours and started getting gassy, therefore it is now being repaired by Varian free of charge.

In February we ran the linac for Dr. Foltz of the Livermore "L" Division linac group. The purpose of these runs was to calibrate instruments that are to be used in measuring the beam characteristics of the Varian linac to be delivered shortly to them.

A sweeping magnet (and sweep supply) has been developed which sweeps the beam across a 5-inch window once a second. This sweeping device will be used by Dr. Newton for bombarding various films with electrons.

Ralph McLaughlin ran an experimental cavity under pulsed rf conditions to determine the feasibility of exciting gas samples for spectrometer measurements.

Robert Lindblom of Dr. Lemmon's group ran a number of experiments to study the crystal structure of choline derivatives.

Information Division
br