UCRL 8383

UNIVERSITY OF CALIFORNIA

Radiation Laboratory

TWO-WEEK LOAN COPY

This is a Library Circulating Copy which may be borrowed for two weeks. For a personal retention copy, call Tech. Info. Division, Ext. 5545

BERKELEY, CALIFORNIA

For Publ. in Trans. PGNS of IRE

DISCLAIMER

This document was prepared as an account of work sponsored by the United States Government. While this document is believed to contain correct information, neither the United States Government nor any agency thereof, nor the Regents of the University of California, nor any of their employees, makes any warranty, express or implied, or assumes any legal responsibility for the accuracy, completeness, or usefulness of any information, apparatus, product, or process disclosed, or represents that its use would not infringe privately owned rights. Reference herein to any specific commercial product, process, or service by its trade name, trademark, manufacturer, or otherwise, does not necessarily constitute or imply its endorsement, recommendation, or favoring by the United States Government or any agency thereof, or the Regents of the University of California. The views and opinions of authors expressed herein do not necessarily state or reflect those of the United States Government or any agency thereof or the Regents of the University of California.

UNIVERSITY OF CALIFORNIA

Lawrence Radiation Laboratory
Berkeley, California

Contract No. W-7405-eng-48

A CHRONOTRON FOR RELATIVISTIC NEUTRON TIME-OF-FLIGHT MEASUREMENTS

Robert H. Ragodale and Warren Fenton Stubbins

December 11, 1958

Printed for the U.S. Atomic Energy Commission

A CHRONOTRON FOR RELATIVISTIC NEUTRON TIME-OF-FLIGHT MEASUREMENTS

Robert H. Ragsdale and Warren Fenton Stubbins

Lawrence Radiation Laboratory
University of California
Berkeley, California

December 11, 1958

ABSTRACT

Neutrons in pulses produced at a 19-Mc rate by the circulating beam of the 184-inch cyclotron striking an internal target have kinetic energies from 100 to 800 Mev. Circulating-beam bunching limits the time duration of each neutron pulse. Reference signals are produced by a Cherenkov-radiator internal target or the radio-frequency voltage on the cyclotron dee. The chronotron coincidence circuits, capable of a resolving time of less than 10^{-9} second, are spaced with increasing time intervals to reduce reflection reinforcement. Saturation of coincidence circuits minimizes the dependence on signal amplitude. The 125-Ω cable is matched at sampling points by a series inductance tapped by tube input capacity.

A CHRONOTRON FOR RELATIVISTIC NEUTRON TIME-OF-FLIGHT MEASUREMENTS*

Robert H. Ragsdale and Warren Fenton Stubbins†

Lawrence Radiation Laboratory
University of California
Berkeley, California

December 11, 1958

I. INTRODUCTION

Many experiments yielding interesting nuclear data may be performed by using relativistic neutrons of known energy. The neutron yield from high-energy accelerators occurs with a continuum of energies ranging from values greater than the energy of the accelerated particle in the case of (p, n) reactions to quite low energies. The time interval between the production of the neutron by the internal beam of the cyclotron and its interaction in the nuclear process under study provides a direct measure of the neutron energy. A chronotron,[1] to determine the time interval, must be capable of resolving the shortest possible interval and operating at the repetition rate at which the neutrons are produced by the accelerator. These two requirements are prime considerations in the design, and convenience, flexibility, reliability, and independence from auxiliary equipment are additional objectives.

Neutrons are produced by the 184-inch cyclotron when the particles at the end of the modulation cycle achieve full energy and strike an internal target. The cyclotron is modulated at 64 cycles per second, and neutrons are produced over about 100 microseconds. The neutron production occurs in pulses, as some of the accelerated particles strike the internal target during each rf cycle, corresponding to the 19-Mc particle circulation frequency, and continues until all the particles accelerated in the modulation cycle are expended. The separation between pulses is about 50 nanoseconds, and the duration of each pulse depends on the phase spread of the beam relative to the rf accelerating voltage of the cyclotron. A typical value of pulse duration is 15 nanoseconds. Operation of the cyclotron to reduce the pulse duration to as small an interval as possible is necessary to provide accuracy in the timing measurement.

---

* Work done under the auspices of the U.S. Atomic Energy Commission.

[1] S.H. Neddermeyer, E.J. Althaus, W. Allison, and E.R. Schatz, Rev. Sci. Instr. 18, 482 (1947).

† [illegible]

The electrical reference pulse that indicates the production time of the neutrons is obtained from a Cherenkov counter which is used as the internal target struck by the circulating beam. An alternate electrical reference pulse may be obtained from the rf accelerating voltage whose phase is related to the position of the circulating beam. The reference pulse is one of the inputs to the chronotron during its use in experiments.

The electrical signal obtained from the coincidence circuit of the counter telescope observing the neutron-induced nuclear reaction is applied to the chronotron as the second input. The time relationship between these two signals is resolved by the chronotron.

II. CIRCUIT DESCRIPTION

One may think of a chronotron as two parallel pulse-conducting lines, terminated in their characteristic impedance and tapped at intervals by coincidence circuits (Fig. 1). The mode of operation is to send the reference pulse along one line while the counter-telescope signal is sent along the other line in the opposite direction. As the signals travel along their respective lines, they pass, and if this occurs at a coincidence-circuit input, an output signal will be generated. It can be seen that as the counter-telescope signal arrives later and later, the coincidence moves to the adjacent channels, thus indicating the time interval between signals.[2]

The chronotron described in this report differs somewhat from the classical form in that it was assembled from standard counting units presently in use at UCRL, rather than being custom built. There are two reasons for this: One was to take advantage of the fact that the constituent parts had already been designed

---

[2]For a more thorough discussion see H.K. Ticho and J. Gauger, Rev. Sci. Instr. 27, 354 (1956).

and that most of the time spent on the project would go toward assembly and final adjustment rather than development. The second is that the readout system of the classical chronotron has a rather long dead time, since the 'scope sweep circuits must be reset before another event can be recorded. In addition, the data must be recorded on film, which entails problems of handling and scanning. In order to circumvent these difficulties, scaler readout is provided, thus reducing the dead time of the system and bypassing the need for output coding circuits.

Another difference involves the use of input-pulse shaping by means of clipping lines. This technique is employed to increase the resolution of the system and to prevent pulses from "overlapping" and causing an output pulse in two channels simultaneously. It will be seen that this type of arrangement results in "holes" in the time base, thus permitting coincidences to occur between channels and hence to fail to register on the scaling units. It was decided that this limitation is not serious in the present application, and no attempt has been made to correct it.

A. Chronotron Line

After initial experimentation with UCRL pulse guide (coaxial styrofoam transmission line),[3] the selection was made of RG-63/U coaxial cable. An analysis of various cable types by Kerns et al.[4] shows that the pulse shapes encountered would not be seriously altered by the cable lengths involved. Further, the UCRL 125-Ω connectors for use with RG-63/U, which have very small reflections,[5] provide a convenient means for connecting the coincidence-circuit elements (Fig. 2), and allow changes in line length for maximum flexibility of the chronotron. RG-63/U is used for the chronotron lines and for internal connections in the coincidence circuits, as well as for clipping lines.

The chronotron lines are tapped by each coincidence circuit through an m-derived filter network formed by a small inductance and the input capacitance of the coincidence circuit. The extension of the system to include many sample

---

[3] Quentin Kerns, Nucleonics Vol. 14 No. 4 45 (April 1956).

[4] Q. Kerns, F. Kirsten, and C.N. Winningstad in Radiation Laboratory Counting Handbook, UCRL-3307, March 1956.

[5] The mismatch due to UCRL connectors used for joining RG 63/U cable is not more than 1% for signals with rise times of 5 x 10^{-10} sec or less.

points is accomplished by adding additional cables and coincidence circuits. In our setup, five circuits were connected to form the chronotron. The interval between sample points is determined by the cable lengths and may easily be changed. Two lines are used to permit easier termination.

B. Coincidence Circuits

The coincidence circuit (Fig. 3) selected for the chronotron is a standard UCRL nanosecond unit.[6] As previously mentioned, the inputs to each channel are coupled to the lines by means of m-derived filters, which allow an excellent match to the lines and reduce the rise time of the input circuit. Reflections of the order of a few percent are easily obtained by this method. Input pulses are negative and are arranged to be greater than -2v in magnitude so as to cut off the input tube. The pulses applied to the Rossi diode circuit are then limited in height, thus reducing the sensitivity of the coincidence circuit to varying input pulse heights. A clipping line, consisting of a 10-inch length of RG-63/U shorted at its far end, is used to limit the duration of the pulse applied to the Rossi circuit, thus the signal at the coincidence circuit corresponds approximately to that part of the input signal which carried the pentode to cutoff.

The diode coincidence circuit includes a diode in series with the output signal acting as a discriminator in suppressing feed-through pulses occurring when only one pentode has an input. Coincidence ratios of 20:1 have been measured.

Coincidence output pulses are amplified by means of a conventional shunt-peaked amplifier which drives a cathode follower to match the low-impedance output cable.

Provisions for adjustment of screen voltage to balance both sides of the coincidence circuit are included. Meters allow the observation of the plate currents of either side, or their combined plate current, in each coincidence circuit.

---

[6] William A. Wenzel, Millimicrosecond Coincidence Circuit for High-Speed Counting, UCRL-8000, Oct. 1957.

C. Discriminator

Pulses appearing at the output of the coincidence circuit are applied to a discriminator circuit consisting of a diode subtractor and an EFP-60 one-shot multivibrator (Fig. 4). This unit serves the function of shaping the coincidence output pulses and increasing the resolution of the system by steepening the sides of the resolution curve. The multivibrator output is of sufficient amplitude to drive a standard scaling unit directly.

III. PERFORMANCE

Prior to use in nuclear experimentation, the system was tested with a mercury pulse generator connected to the lines so that both pulses propagated down the lines in the same direction, thus registering a coincidence in each channel. The results of this test are shown in Fig. 5. Since the pulse shapes derived from the pulse generator are "idealized" relative to photomultiplier signals, a further test was made with two 6810 tubes in a cosmic-ray telescope. The resolution of a typical channel is shown in Fig. 6.

ACKNOWLEDGMENT

The authors wish to express their thanks to Mr. D.D. Esterly, Mr. George Constantian for their help in gathering the data for this report and Mr. L.J. Wagner for his many helpful suggestions concerning the reference pulse circuits.

LEGENDS

Fig. 1. Over-all block diagram of chronotron system.

Fig. 2. Coincidence circuit input, showing method of line tapping with m-derived filter.

Fig. 3. Simplified schematic diagram of typical coincidence circuit.

Fig. 4. Simplified schematic diagram of discriminator circuit.

Fig. 5. Resolution of typical coincidence channel with pulse-generator input.

Fig. 6. Resolution of typical coincidence channel with cosmic-ray counter input.

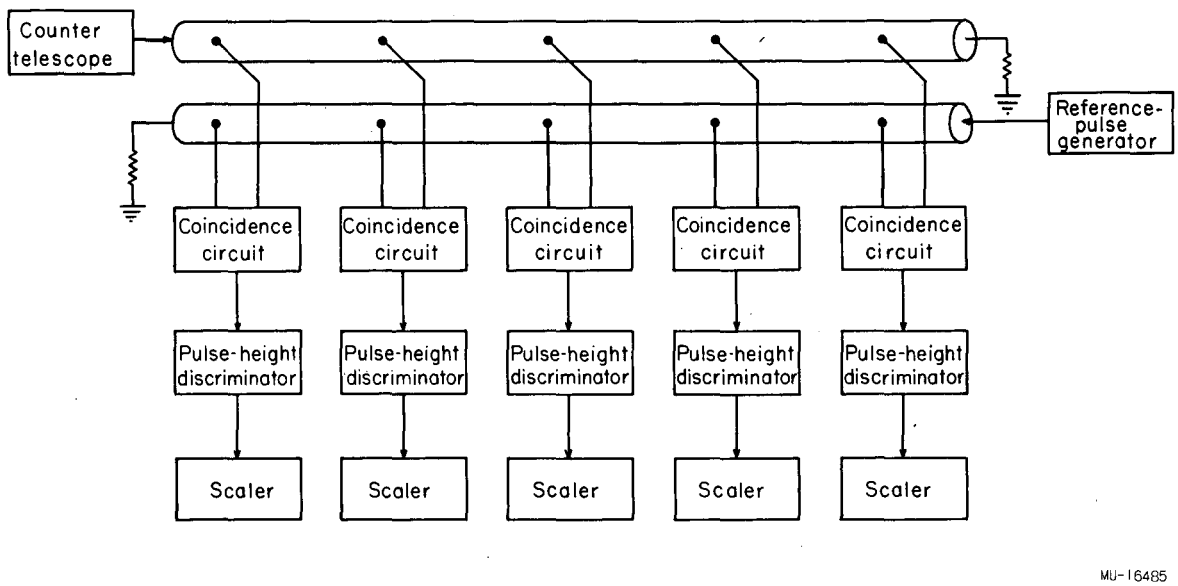
Counter telescope
Reference-pulse generator
Coincidence circuit
Coincidence circuit
Coincidence circuit
Coincidence circuit
Coincidence circuit
Pulse-height discriminator
Pulse-height discriminator
Pulse-height discriminator
Pulse-height discriminator
Pulse-height discriminator
Scaler
Scaler
Scaler
Scaler
Scaler
MU-16485

Fig. 1

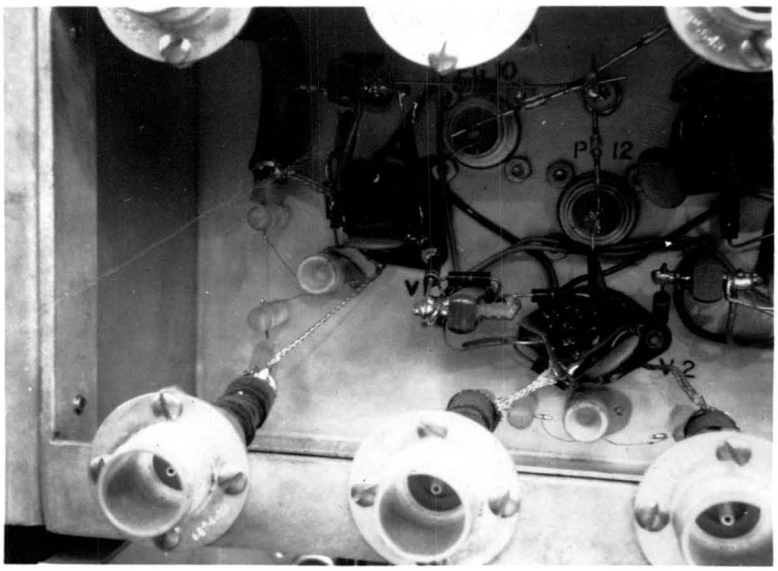

Fig. 2

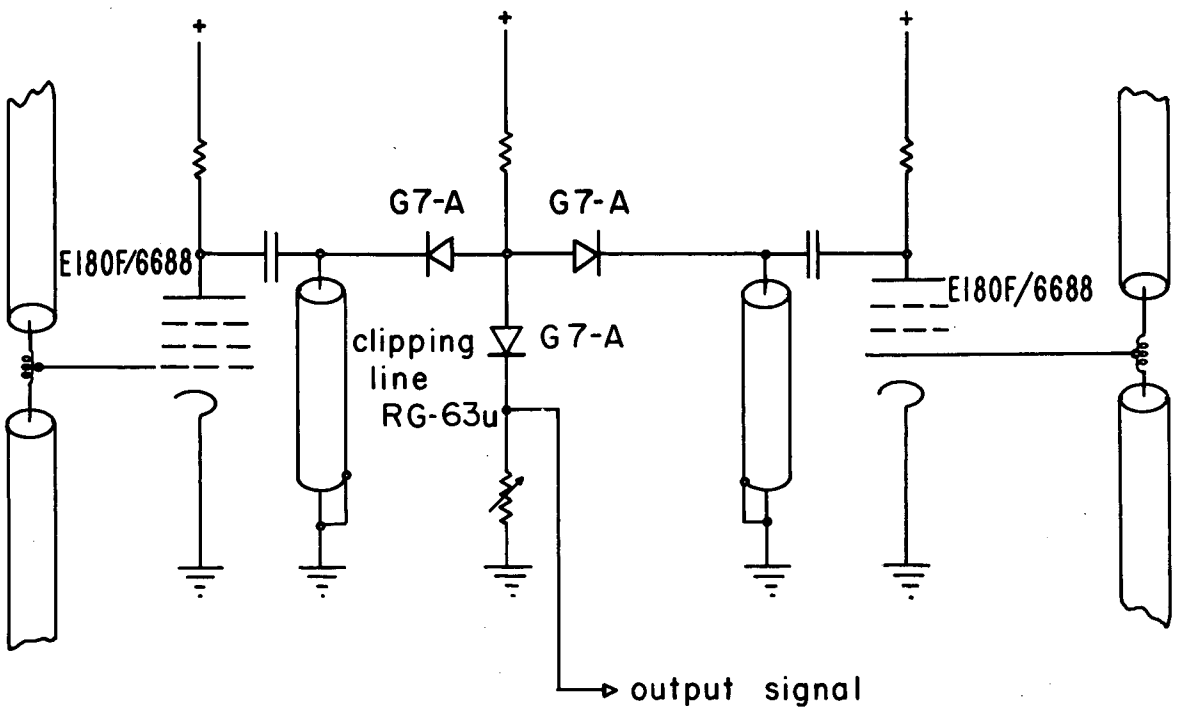
+
+
+
G7-A
G7-A
E180F/6688
E180F/6688
clipping
line
RG-63u
G7-A
output signal
MU-16486

Fig. 3

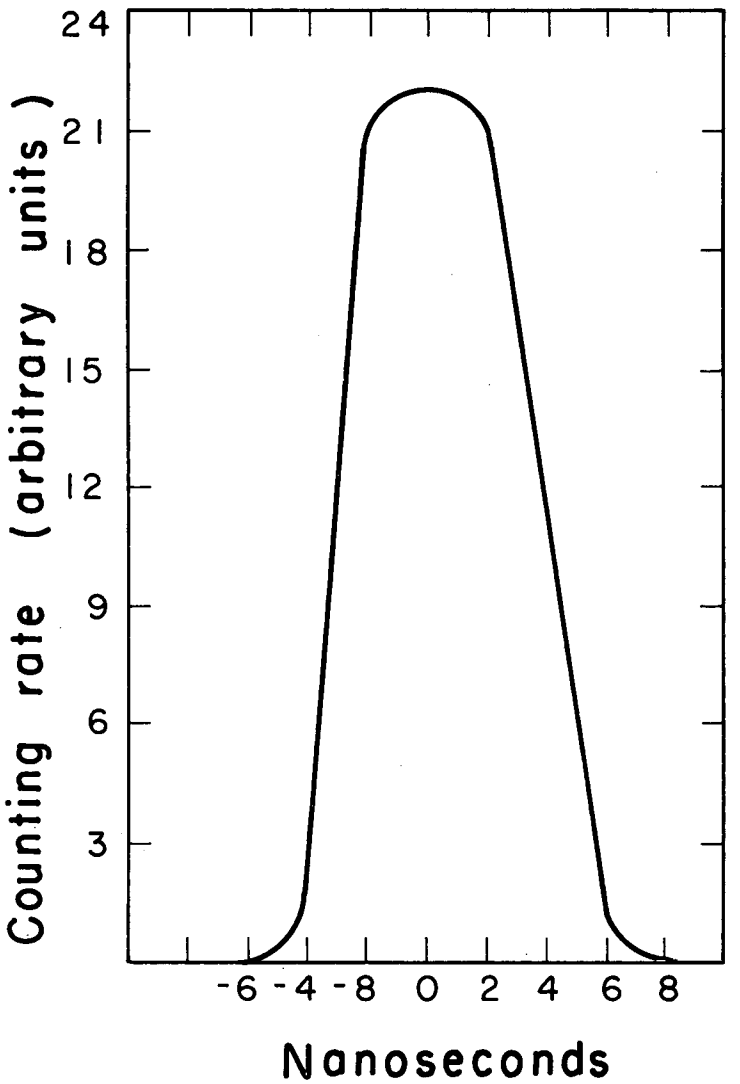

MU-16489

Fig. 4

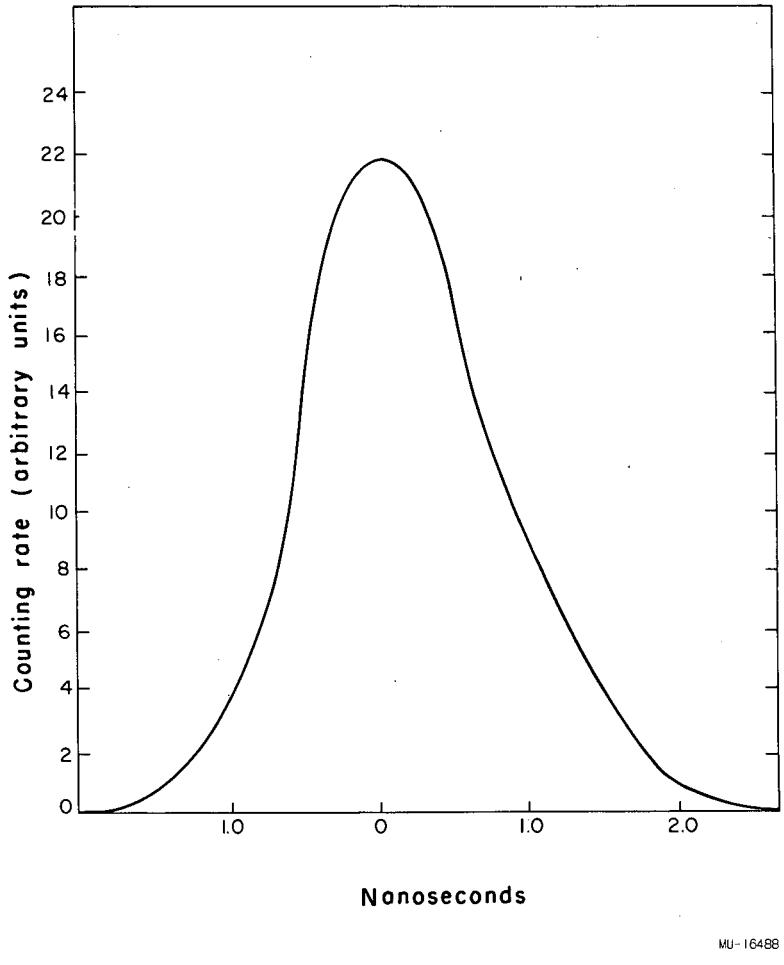
24
22
20
18
16
14
12
10
8
6
4
2
0
Counting rate (arbitrary units)
1.0
0
1.0
2.0
Nanoseconds
MU-16488

Fig. 5

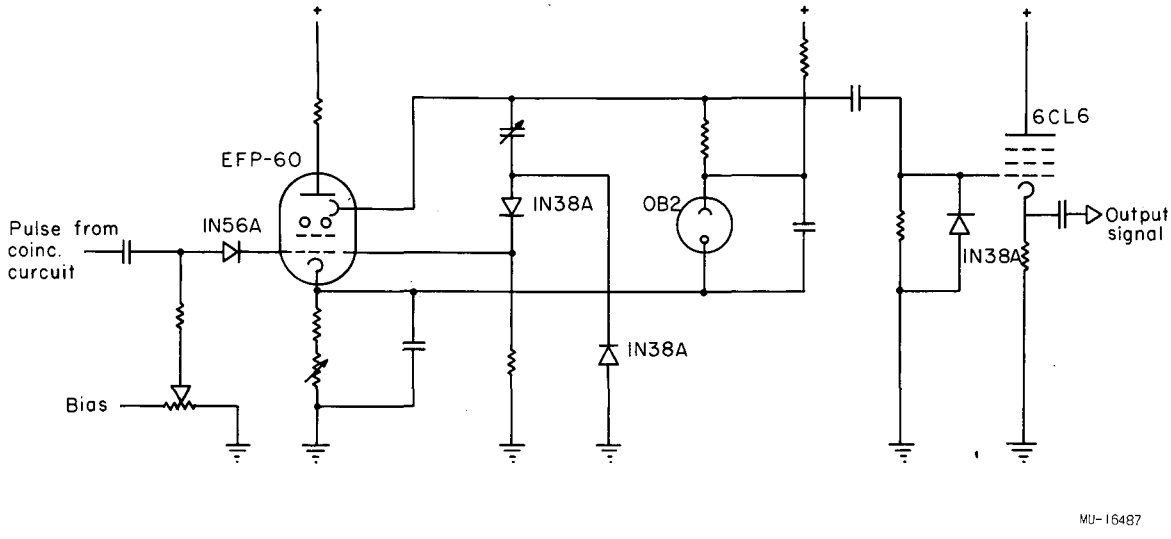
EFP-60
Pulse from
coinc.
curcuit
IN56A
Bias
IN38A
IN38A
OB2
IN38A
6CL6
Output
signal
MU-16487

Fig. 6