UCRL 8393

UNIVERSITY OF CALIFORNIA

Radiation Laboratory

TWO-WEEK LOAN COPY

This is a Library Circulating Copy which may be borrowed for two weeks. For a personal retention copy, call Tech. Info. Division, Ext. 5545

BERKELEY, CALIFORNIA

DISCLAIMER

This document was prepared as an account of work sponsored by the United States Government. While this document is believed to contain correct information, neither the United States Government nor any agency thereof, nor the Regents of the University of California, nor any of their employees, makes any warranty, express or implied, or assumes any legal responsibility for the accuracy, completeness, or usefulness of any information, apparatus, product, or process disclosed, or represents that its use would not infringe privately owned rights. Reference herein to any specific commercial product, process, or service by its trade name, trademark, manufacturer, or otherwise, does not necessarily constitute or imply its endorsement, recommendation, or favoring by the United States Government or any agency thereof, or the Regents of the University of California. The views and opinions of authors expressed herein do not necessarily state or reflect those of the United States Government or any agency thereof or the Regents of the University of California.

UCRL-8393

UNIVERSITY OF CALIFORNIA
Radiation Laboratory
Berkeley, California

Contract No. W-7405-eng-48

THE MULTIPLEX PULSE-HEIGHT ANALYZER SYSTEM

Almon E. Larsh, Jr.

July 25, 1958

Printed for the U. S. Atomic Energy Commission

THE MULTIPLEX PULSE-HEIGHT ANALYZER SYSTEM

Almon E. Larsh, Jr.

Radiation Laboratory
University of California
Berkeley, California

July 25, 1958

ABSTRACT

The multiplex pulse-height analyzer system allows a single multichannel pulse-height analyzer to analyze and record the spectra simultaneously from several detectors, presenting the resultant data on paper tape or in other readily usable form. This allows a more economical utilization of pulse-height analyzers than can be effected by coupling a separate pulse-height analyzer to each detector, as has been done previously. This system can be employed in those instances where the maximum count-rate capabilities of an analyzer are not being fully utilized.

THE MULTIPLEX PULSE-HEIGHT ANALYZER SYSTEM

Almon E. Larsh, Jr.

Radiation Laboratory
University of California
Berkeley, California

July 25, 1958

The high cost and general short supply of multichannel pulse-height analyzers for nuclear research makes desirable the utilization of these instruments to the fullest extent possible. In instances where the maximum count-rate capabilities of an analyzer are not fully utilized, the multiplex pulse-height analyzer system is technically feasible and economically desirable. This system allows a single multichannel pulse-height analyzer to analyze and record the spectra simultaneously from several detectors, presenting the resultant data in readily usable form.

In certain types of experiments it is desirable, for time coincident reasons, to analyze several samples simultaneously. The multiplex system works well in these experiments because it can record time, along with detector and energy information, as the events under study occur, thus allowing half-life information to be obtained.

The Multiplex System

A multiplex pulse-height analyzer system is comprised of the basic units shown in Fig. 1. The signals originate in the several detectors and are amplified in their individual preamplifiers and amplifiers. The output of each amplifier is split, part of the signal going to the coding circuit and part going to the mixer-amplifier, and on to the analyzer for sorting. The amplitude information of each analyzed event is sent from the analyzer to the recording device. Simultaneously the coding circuit provides the recorder with a signal identifying the detector in which the event being recorded occurred. As the information is stored by the recorder, the time of the event's occurrence is recorded. The analyzer input is made self-blocking so that no ambiguous or incorrect information will be stored.

Circuit Components

The detectors may be scintillation detectors or ionization chambers or any device to produce the desired signal pulse. The preamplifiers and amplifiers are conventional circuits, raising the signal level to the order of volts. The mixer-amplifier has a passive mixer (a resistor network), and a window amplifier to deliver a suitable signal to the pulse-height analyzer.

The pulse-height analyzer used must be able to supply coded pulse-height information to the recorder. Either a biased discriminator or height-to-time type of analyzer may easily be modified to supply the required signals.

The coding circuit consists of a coincidence amplifier and trigger pair for each information channel or detector. Whenever a detector amplifier supplies a signal to the coding circuit and the mixer-amplifier passes it on to the pulse-height analyzer, the coding circuit is allowed to generate an identification signal and send it to the recorder for storage.

Time data are fed into the recorder continuously. These may be "clock time", time from end of bombardment, time from end of chemical separation, etc. Time datum is stored only when an event occurs and is analyzed. The recorder "store" command comes from the analyzer after it has analyzed and coded the pulse-height information.

The recorder may be a paper tape printer, a paper tape punch, or a magnetic tape recorder. The use of punched cards was rejected as primary storage because of the relatively slow rate of storage at one event per card.

Practice

To test the workability of the multiplex idea, a system was assembled of existing components. The coding circuit was the only new type of equipment needed. The pulse-height analyzer used was a Los Alamos-designed 100-channel height-to-time model.[1] Using this analyzer allowed convenient decimal information to be supplied to the recorder.

The recorder used was a Clary parallel-entry paper-tape printer. The printer contained a synchronous motor driving an accumulator which printed elapsed time wherever detector and channel-number data were printed. The timer could be preset to start timing from any desired time. Detectors were

identified on a column of letters. A second column of letters identified pulse generator pulses, which could be fed through the system during experimental runs to keep a continuous check on the proper operation of the system. There were three columns of numbers available for pulse-height use. Only two were used on the first system.

Composite data were stored in 100 Sodeco registers in the pulse-height analyzer.

Results

The system has been operating satisfactorily on a routine basis for approximately one year.

The unique characteristics of the system were used to advantage by Ghiorso, et al, in the discovery of element 102.[2] In their procedure it was required that five radioactive samples be analysed simultaneously. With the multiplex pulse-height analyzer system it was possible to make the desired measurements for identifying the atoms collected by the experimental equipment, and thus to determine the half-life of the isotope of element 102.

A new system is being assembled using a Penco PA-4 height-to-time converter chassis, binary channel-number information, and a magnetic-tape recorder. An electronic clock will supply time data. By using magnetic-tape storage a gain will be made in the maximum allowable rate of data accumulation. Automatic processing of stored data will be possible.

Acknowledgments

The basic system was devised at UCRL in conjunction with Albert Ghiorso and reduced to practice in conjunction with D. F. Mosier.

This work was done under the auspices of the U. S. Atomic Energy Commission.

References

1. Richard D. Hiebert, Gerald L. Evans, and Richard J. Watts, The Model 15 100-Channel Pulse-Height Analyzer, Los Alamos Scientific Laboratory Report No. LA-1565, April 1953.
2. Albert Ghiorso, Torbjorn Sikkeland, John R. Walton, and Glenn T. Seaborg, Phys. Rev. Letters, 1, 18 (1958).

Legends

Fig. 1. Multiplex block diagram.

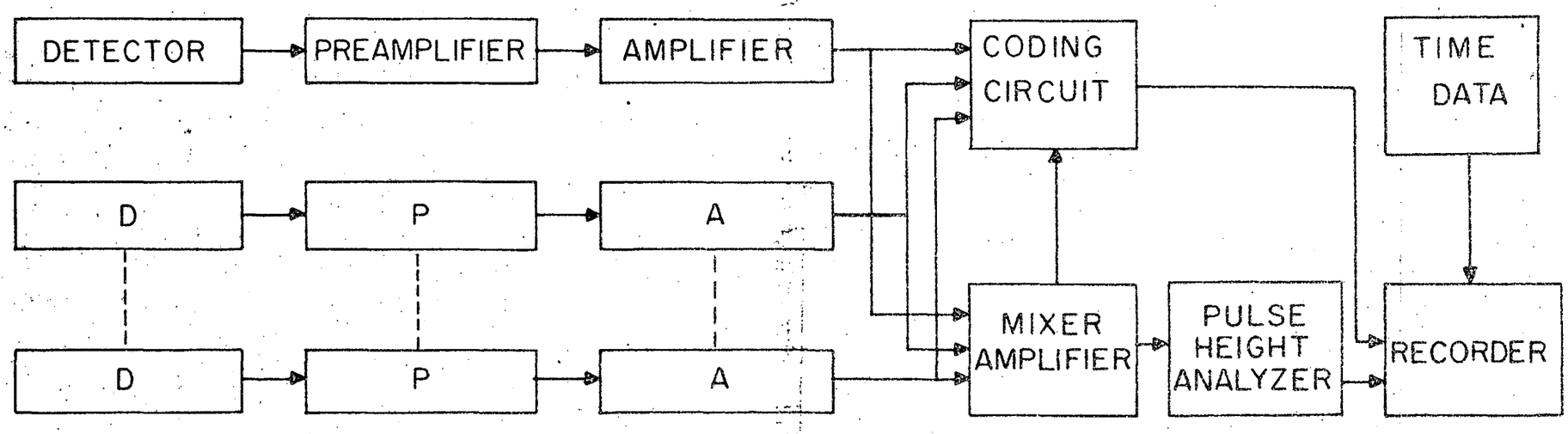
DETECTOR
PREAMPLIFIER
AMPLIFIER
CODING CIRCUIT
TIME DATA
D
P
A
D
P
A
MIXER AMPLIFIER
PULSE HEIGHT ANALYZER
RECORDER