UCRL 8480

UNIVERSITY OF CALIFORNIA

Radiation Laboratory

A SIMPLE PULSED NEUTRON SOURCE BASED ON CROSSED-FIELD TRAPPING

TWO-WEEK LOAN COPY

This is a Library Circulating Copy which may be borrowed for two weeks. For a personal retention copy, call Tech. Info. Division, Ext. 5545

Instra. Dist.
OTS 50

DISCLAIMER

This document was prepared as an account of work sponsored by the United States Government. While this document is believed to contain correct information, neither the United States Government nor any agency thereof, nor the Regents of the University of California, nor any of their employees, makes any warranty, express or implied, or assumes any legal responsibility for the accuracy, completeness, or usefulness of any information, apparatus, product, or process disclosed, or represents that its use would not infringe privately owned rights. Reference herein to any specific commercial product, process, or service by its trade name, trademark, manufacturer, or otherwise, does not necessarily constitute or imply its endorsement, recommendation, or favoring by the United States Government or any agency thereof, or the Regents of the University of California. The views and opinions of authors expressed herein do not necessarily state or reflect those of the United States Government or any agency thereof or the Regents of the University of California.

UCRL-8480

UNIVERSITY OF CALIFORNIA

Radiation Laboratory
Berkeley, California

Contract No. W-7405-eng-48

A SIMPLE PULSED NEUTRON SOURCE BASED ON CROSSED-FIELD TRAPPING

Report by: Lawrence Ruby
October 2, 1958

Work done by: Richard B. Crawford
James D. Gow
John H. Jordan, Jr.
Wing G. Pon
Joseph B. Rechen
Lawrence Ruby
John M. Wilcox
Tony Vuletich

Printed for the U.S. Atomic Energy Commission

Printed in USA. Price 50 cents. Available from the
Office of Technical Services
U. S. Department of Commerce
Washington 25, D. C.

A SIMPLE PULSED NEUTRON SOURCE BASED ON CROSSED-FIELD TRAPPING

Report by: Lawrence Ruby

Work done by: Richard B. Crawford
James D. Gow
John H. Jordan, Jr.
Wing G. Pon
Joseph B. Rechen
Lawrence Ruby
John M. Wilcox
Tony Vuletich

Radiation Laboratory
University of California
Berkeley, California

October 2, 1958

Abstract

A simple pulsed neutron source has been constructed which consists of an anode formed by a cylindrical-shell permanent magnet, and of two disk cathodes. One of the cathodes forms the neutron-producing target and the device is exhausted adjacent to the other. In operation, the anode is pulsed positive at 140 kv for 1 μsec at up to 200 pulses per sec. Ions are produced adjacent to the anode in a toroidal trapping region which exists as a result of the crossed electric and magnetic fields. The ionization is enhanced by the action of electrons reflecting through the inside of the magnetic shell. As a consequence of this trapping, large fluxes of soft x-rays are created which may be injurious to personnel.

A SIMPLE PULSED NEUTRON SOURCE BASED ON CROSSED-FIELD TRAPPING

Report by: Lawrence Ruby

Work done by: Richard B. Crawford
James D. Gow
John H. Jordan, Jr.
Wing G. Pon
Joseph B. Rechen
Lawrence Ruby
John M. Wilcox
Tony Vuletich

Radiation Laboratory
University of California
Berkeley, California

October 2, 1958

On the basis of the experimental observation by J.D. Gow et al.[1] that certain configurations of crossed electric and magnetic fields efficiently trap and accelerate charged particles, a particularly simple pulsed neutron source has been constructed. As shown in Fig. 1, the device consists merely of a permanent magnet encased in a stainless steel shell which constitutes the anode, and two disk electrodes which constitute the cathodes. The anode is pulsed positive and the cathodes are maintained at ground potential. The cathode at the right of the figure has fastened on it a neutron-producing target containing occluded deuterium or tritium. The other cathode is similar except that it has no target. It has, however, several holes spaced around the periphery for the purpose of exhausting the system, and one small opening connected to a supply of deuterium gas. Not seen in the figure is a 3-inch industrial glass elbow which joins this cathode with a metal mercury diffusion pump. Two pieces of 3-in. industrial glass pipe, each 6 in. long, form the insulating walls of the system. They will stand off, in dry air, up to 140 kv peak. The glass pipes make O-ring seals onto brass flanges at each end, and the whole structure is bolted together with bakelite studs. Recently, these have been replaced with threaded nylon rods, which have much less tendency to shear when tightened.

A sketch of the magnet and magnet case is shown in Fig. 2. The presence of soft-solder joints exposed to the plasma seems to cause no difficulty. The projections of the stainless steel at each end constitute shields which prevent heavy electron bombardment of the glass walls. Indox V ceramic magnets[2] in the form of face-magnetized rings were chosen, as they

[1] James Donald Gow, Lawrence Ruby, Lloyd Smith, and John M. Wilcox, The Trapping of Charged Particles in Axially Symmetrical Systems of Electric and Magnetic Fields, UCRL-8156, Jan. 1958.

[2] Made by Indiana Steel Products Company, Valparaiso, Indiana.

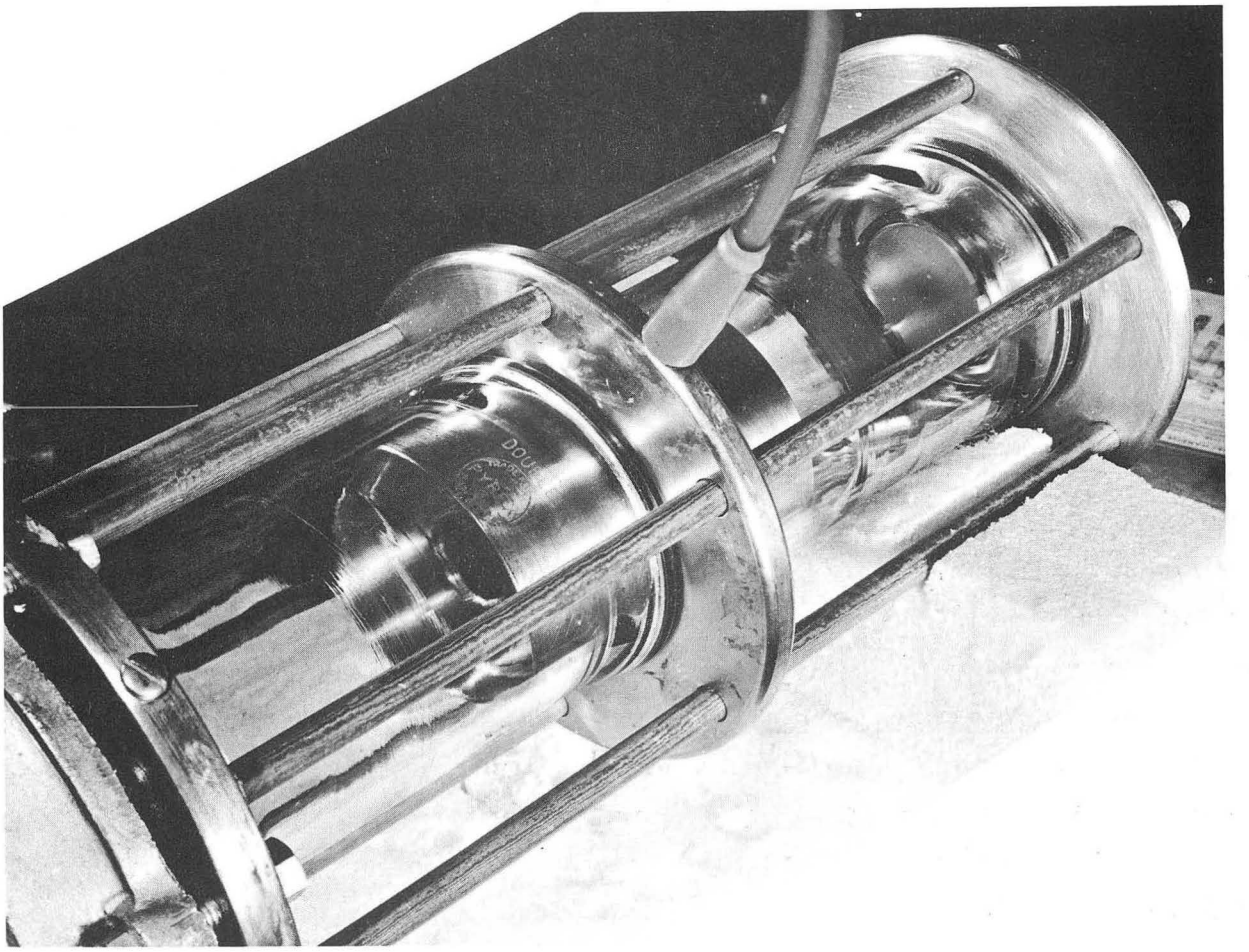

ZN-2042

Fig. 1. Pulsed neutron source (exclusive of vacuum system and deuterium supply).

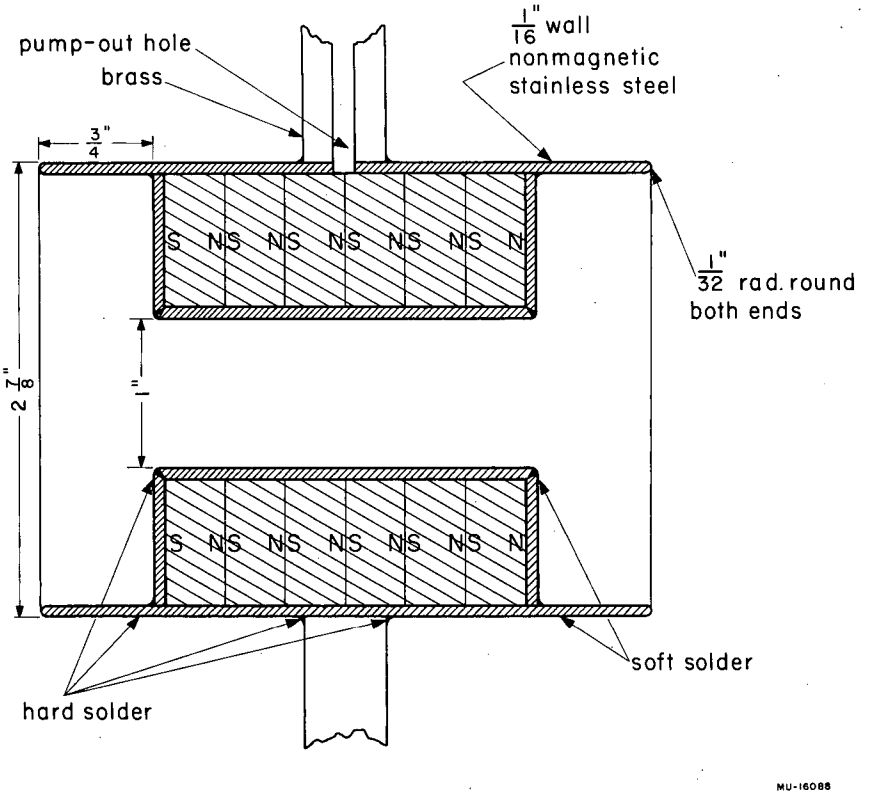

Fig. 2. Sketch of anode assembly.

are capable of an unusually high residual field. The resultant field distribution has been described elsewhere[3] in another connection.

The anode is pulsed by means of a high-voltage transformer which is driven by a pulse-forming network. The lower limit on the pulse width is about 1 microsecond, as this is the characteristic build-up time of the discharge. The upper limit is determined for this system by the external high-voltage standoff, but a somewhat modified configuration has been run both with long pulses and with d.c. The upper limit of the pulse-repetition rate is limited by heat dissipation in the device. With a 1-μsec pulse, satisfactory operation has been achieved over a long period at up to 200 pulses per second.

As a circuit element, the device presents an impedance that is a function of both voltage and deuterium pressure. Below about 9 microns of deuterium pressure, essentially no current is drawn as a result of pulsing the anode. However, at this value a rather abrupt change occurs resulting in 1 amp or more of tube current, which increases either with additional voltage or with additional pressure. The upper pressure limit is determined by internal arc breakdown, which sets in at progressively lower pressures as the high voltage is raised. Representative operating parameters are 125 kv peak, 15 amp tube current, and 12 μ of deuterium. A significant experimental observation is that irrespective of the type of gas used, the operating range as measured by an ion gauge is the same. That is, the operation of the device depends only on the ionizability of the gas and not the absolute pressure.

The table below lists some neutron yields for the $H^2(d,n)He^3$ reaction. Recently, the device has been situated at the Livermore Laboratory, where neutrons from the $H^3(d,n)He^4$ reaction have been employed in critical-assembly experiments.

---

[3] J.B. Rechen and J.C. Jordan, Jr., Rev. Sci. Instr. 28, 584 (1957).

Yield from $H^2(d,n)He^3$ Neutrons/microsecond	Peak voltage (in kv)
0.8×10^3	70
2.2×10^3	85
4.8×10^3	95
8.1×10^3	110
16.6×10^3	125
23.7×10^3	140

The theory of operation of this neutron source evolved from the study of several other crossed-field ion trapping devices.[1] Consider the region adjacent to the side of the anode corresponding, for example, to the north magnetic pole. An electron born in this region is accelerated toward the anode by the electric field. The radial component of the magnetic field acting on the axial velocity thus acquired tends to deflect the motion towards the positive azimuthal direction, finally returning the particle to the axial plane from which it originally came. The force due to the axial component of the magnetic field on the azimuthal component of velocity is directed toward the axis, and results in a composite motion in the form of cycloids which encircle the axis. During these excursions an ionizing collision may occur which releases another low-energy electron and moves the average axial position of the first electron slightly toward the anode. Thus electrons can be trapped and multiplied in such a configuration of fields. We have termed this the "omnitron effect."

Actually, the foregoing explanation is highly oversimplified. Integration of the equations of motion with an analog computer has shown certain conditions to be required for trapped orbits.[1] In particular, from the values of electric fields required, it can be said that the above mechanism is principally effective in first establishing a region of intense ionization, which consequently results in a radical alteration of the electric potential distribution. Thus, after a microsecond or two, when the discharge has become stable, practically all the potential drop occurs within a centimeter or so of the cathode. Electrons on the axis of the device are not trapped by the mechanism described but are accelerated into the throat of the magnet. Emerging on the other side, they are reflected by the decelerating electric field, so that the magnet throat

region becomes another source of intense ionization. This second region only augments the ion current reaching the targets, and, in fact, if the throat is plugged, both sections of the device operate independently.

Because of the existence close to the anode of a region of high-density electrons, i.e., about $10^{10}/cm^3$, with average energies in the kilovolt range, this type of device is a very intense source of soft x-rays. Within a meter of the apparatus, the flux is dangerous to personnel at repetition rates as low as 1 pps. Electron bombardment also produces radiation damage to the glass insulators, as evidenced by a discoloration and finally by a crazing of the inside surface.

This work was done under the auspices of the U.S. Atomic Energy Commission.

This report was prepared as an account of Government sponsored work. Neither the United States, nor the Commission, nor any person acting on behalf of the Commission:

A. Makes any warranty or representation, express or implied, with respect to the accuracy, completeness, or usefulness of the information contained in this report, or that the use of any information, apparatus, method, or process disclosed in this report may not infringe privately owned rights; or

B. Assumes any liabilities with respect to the use of, or for damages resulting from the use of any information, apparatus, method, or process disclosed in this report.

As used in the above, "person acting on behalf of the Commission" includes any employee or contractor of the Commission to the extent that such employee or contractor prepares, handles or distributes, or provides access to, any information pursuant to his employment or contract with the Commission.