UCRL- 8481

# UNIVERSITY OF CALIFORNIA

# Radiation Laboratory

BERKELEY, CALIFORNIA

## DISCLAIMER

This document was prepared as an account of work sponsored by the United States Government. While this document is believed to contain correct information, neither the United States Government nor any agency thereof, nor the Regents of the University of California, nor any of their employees, makes any warranty, express or implied, or assumes any legal responsibility for the accuracy, completeness, or usefulness of any information, apparatus, product, or process disclosed, or represents that its use would not infringe privately owned rights. Reference herein to any specific commercial product, process, or service by its trade name, trademark, manufacturer, or otherwise, does not necessarily constitute or imply its endorsement, recommendation, or favoring by the United States Government or any agency thereof, or the Regents of the University of California. The views and opinions of authors expressed herein do not necessarily state or reflect those of the United States Government or any agency thereof or the Regents of the University of California.

UCRL-8481

UNIVERSITY OF CALIFORNIA

Radiation Laboratory
Berkeley, California

Contract No. W-7405-eng-48

# SPECTRAL REPRESENTATIONS IN PERTURBATION THEORY. II TWO-PARTICLE SCATTERING

Robert Karplus, Charles M. Sommerfield, and Eyvind H. Wichmann

October 7, 1958

Printed for the U. S. Atomic Energy Commission

# SPECTRAL REPRESENTATIONS IN PERTURBATION THEORY. II.

## TWO-PARTICLE SCATTERING†

Robert Karplus, Charles M. Sommerfield,* and Eyvind H. Wichmann

Radiation Laboratory and Physics Department
University of California
Berkeley, California

October 7, 1958

ABSTRACT

In this paper a particular term in the perturbation expansion for the two-particle scattering amplitude is examined. We consider the real plane defined by the square of the total four-momentum and the square of the momentum transfer, and show that the scattering amplitude is an analytic function of both variables in a certain connected region in this plane. The precise boundary of the region is found. The purpose of this work is to find some conditions that integral representations of the scattering amplitude must satisfy, with the hope that such examples may aid the study of such integral representations in general.

We also apply our general result to some particular cases of physical interest.

---

† Work done under the auspices of the U. S. Atomic Energy Commission.

* National Science Foundation Postdoctoral Fellow.

# SPECTRAL REPRESENTATIONS IN PERTURBATION THEORY. II.

## TWO-PARTICLE SCATTERING†

Robert Karplus, Charles M. Sommerfield,* and Eyvind H. Wichmann

Radiation Laboratory and Physics Department
University of California
Berkeley, California

October 7, 1958

In a recent note[1] we discussed some properties of the vertex operator in perturbation theory, corresponding to the three-vertex (triangular) Feynman diagram. For simplicity we restricted our discussion to the case of six (possibly different) scalar fields, and studied the matrix element as a function of the three independent kinematic invariants of the problem, which in our case were chosen to be the squares of the three incident four-momenta. We then studied the properties of the matrix element as a function of one of these invariants, keeping the other two fixed at values corresponding to physical particles satisfying a number of "stability conditions." The function so defined was shown to be analytic in a cut plane, and our objective was to determine the exact position of the first branch point on the real axis.

---

† Work done under the auspices of the U. S. Atomic Energy Commission.

* National Science Foundation Postdoctoral Fellow.

In this paper we investigate in a similar fashion the matrix element corresponding to the four-vertex square diagram of Fig. 1, which describes a contribution in perturbation theory to the so-called "four-point function." We again restrict ourselves to the case of a number of interacting scalar fields; since the spins of the particles in no way affect the analytic properties of the scattering amplitude, spin may for the purpose of this study be ignored.

In this problem we may distinguish six independent kinematic invariants: the squares of the four incident four-momenta, the square of the total incident momentum, and the square of the momentum transfer, for example.

We keep the first four variables at fixed values corresponding to physical particles, and subject to a number of "stability conditions." Our limited objective is to show that the matrix element is an analytic function of the two remaining variables in a certain connected region in the plane where both are real, and to determine the precise boundary of this region. The thresholds in the spectral representation of the scattering amplitude may be inferred from this information. Our hope is that a few examples will aid in the study of general spectral representations, especially when several stable particles occur in the theory.

Our discussion is applied to some "realistic" cases of physical interest.[2]

Consider the diagram in Fig. 1, where the lines represent scalar particles. For the sake of symmetry we take the four-momenta $p_{12}$, $p_{23}$, $p_{34}$, and $p_{41}$ of the four particles to be "ingoing", so that the law of momentum conservation takes the form

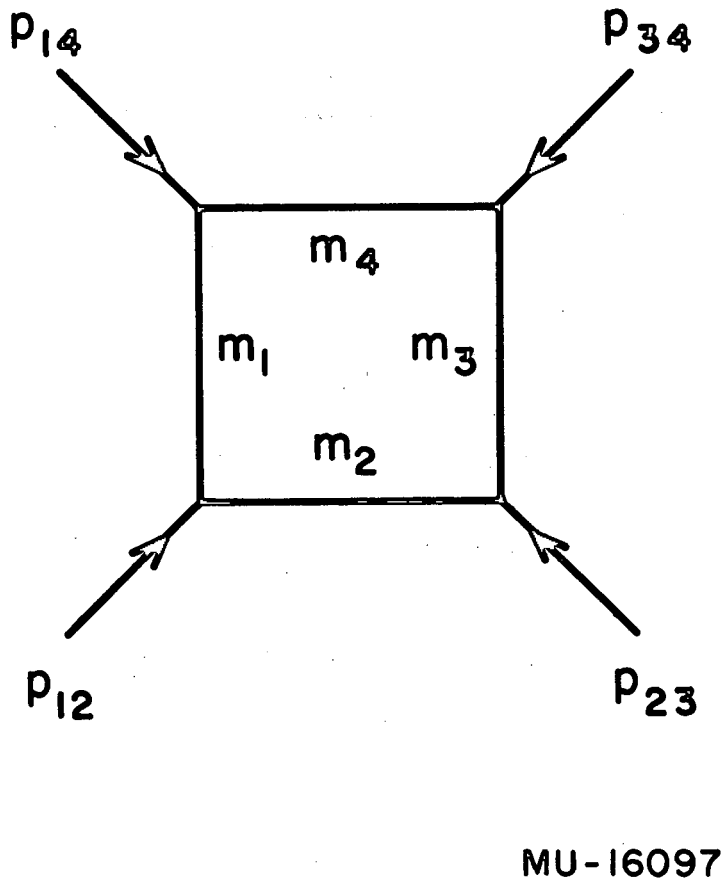


Fig. 1. Feynman diagram for general scattering process in fourth order.

$$p_{12} + p_{23} + p_{34} + p_{41} = 0 . \tag{1}$$

If a constant factor is ignored, the Feynman amplitude for this diagram is given by the integral (real momenta)

$$F = \int_0^1 d\alpha_1 \int_0^1 d\alpha_2 \int_0^1 d\alpha_3 \int_0^1 d\alpha_4 \frac{\delta(1 - \alpha_1 - \alpha_2 - \alpha_3 - \alpha_4)}{D_1^2} , \tag{2}$$

$$D_1 = \sum_{i=1}^{4} \alpha_i m_i^2 - \sum_{i<j=1}^{4} \alpha_i \alpha_j p_{ij}^2 , \tag{3}$$

where we have used the abbreviations

$$p_{13} = p_{12} + p_{23} = -(p_{34} + p_{41}) ,$$

$$p_{24} = p_{23} + p_{34} = -(p_{41} + p_{12}) ,$$

$$p_{ij} = p_{ji} .$$

For convenience we introduce the variables $y_{k\ell}$ by

$$p_{k\ell}^2 = m_k^2 + m_\ell^2 - 2m_k m_\ell y_{k\ell} . \tag{4}$$

With these variables we have

$$D_1 = \sum_{k=1}^{4} \alpha_k^2 m_k^2 + 2 \sum_{k=1}^{4} \sum_{\ell=k+1}^{4} \alpha_k \alpha_\ell y_{k\ell} m_k m_\ell . \tag{5}$$

We subject the four variables associated with the single-particle invariants to the stability conditions

$$y_{12} > -1, \qquad y_{23} > -1, \qquad y_{34} > -1, \qquad y_{41} > -1, \tag{6}$$

which state that at each vertex the external mass is less than the sum of the two masses to which it is coupled. One might impose further conditions of this nature by restricting these variables to being less than 1; this would correspond to triangular conditions, according to which any mass is less than the sum of any two other masses to which it is directly coupled. We will, however, use only Conditions (6), which we assume to hold throughout the remaining part of this paper.

Our objective now is to study the integral in Eq. (2) as a function of the remaining two variables $y_{13}$ and $y_{24}$; to determine the connected region in the corresponding real plane in which the amplitude is an analytic function of both variables; and to describe the boundary of this region, say,

$$y_{13} > \bar{y}_{13}(y_{24}) \quad . \tag{7}$$

Since inspection of Eq. (2) shows that the function is analytic when any one variable is complex while the others are real, it follows from Eq. (7) that the singularities of F in the complex $y_{13}$ plane are then confined to part of the real $y_{13}$ axis,

$$y_{13} \leq \bar{y}_{13} \quad .$$

A spectral representation for F that displays this information is

$$F(y_{13}, y_{24}) = \lim_{\epsilon \to 0} \frac{1}{\pi} \int_{-\infty}^{\bar{y}_{13}(y_{24})} \frac{\operatorname{Im} F(t + i\epsilon, y_{24})}{t - y_{13}} \, dt \; . \tag{8}$$

To continue the analysis, the following fractional linear transformation is convenient:

$$\alpha_k = \frac{x_k/m_k}{\sum_{\ell=1}^{4} (x_\ell/m_\ell)} , \qquad \sum_{k=1}^{4} x_k = 1 .$$

It may be solved for the $x_k$ ,

$$x_k = \frac{\alpha_k m_k}{\sum_{\ell=1}^{4} \alpha_\ell m_\ell} .$$

The region of integration remains unchanged under this transformation, and in place of Eq. (2) we obtain

$$F = \int_0^1 dx_1 \int_0^1 dx_2 \int_0^1 dx_3 \int_0^1 dx_4 \frac{\delta(1 - x_1 - x_2 - x_3 - x_4)}{m_1 m_2 m_3 m_4 D^2} , \tag{9}$$

$$D = \sum_{k=1}^{4} x_k^2 + 2 \sum_{k=1}^{4} \sum_{\ell=k+1}^{4} x_k x_\ell y_{k\ell} .$$

In Appendix A the analogous transformations are applied to the triangular vertex diagram considered in Paper I, and the results are rewritten in the new notation. This forms a useful introduction to the study of the four-point function, since the case of the vertex function is much simpler.

Some properties of F may be inferred directly when D is rewritten

$$D = (x_1 + x_3 - x_2 - x_4)^2 + 2x_1x_3(y_{13} - 1) + 2x_2x_4(y_{24} - 1)$$
$$+ 2\left[x_1x_2(1 + y_{12}) + x_2x_3(1 + y_{23}) + x_3x_4(1 + y_{34}) + x_1x_4(1 + y_{14})\right] . \tag{10}$$

The stability conditions (6) then imply that, in the region of the x integration, the denominator D cannot vanish if

$$y_{13} > 1 \qquad \text{and} \qquad y_{24} > 1 . \tag{11a}$$

On the other hand, if

$$y_{13} < -1 \qquad \text{and/or} \qquad y_{24} < -1 , \tag{11b}$$

the denominator D vanishes at some point in the region of integration.

Thus $F(y_{13}, y_{24})$ is an analytic function of both variables in the region defined by the inequaltites (11a). This plane region is included in a larger connected plane region R in which F is an analytic function of both variables. We shall find the boundary of this region R and show that R consists of all points $(y_{13}, y_{24})$ such that in the range of the x integration the expression D does not vanish.

To prove this assertion let the region of integration be T,

$$T : \left\{ x_k \geqslant 0 \ , \quad x_1 + x_2 + x_3 + x_4 = 1 \right\} , \tag{12}$$

and let R' be the region in the real $(y_{13}, y_{24})$ plane in which D cannot vanish if x is in T. Then, if the point $(y_{13}, y_{24})$ is in R', so is the point $(y_{13} + \delta_1, \ y_{24} + \delta_2)$ for nonnegative $\delta_1$ and $\delta_2$. Furthermore, our previous remarks show that R' is included in the region $y_{13} > -1$, $y_{24} > -1$. Thus, if we let $y_{24}$ be fixed and such that some point of the line $y_{24}$ = const. belongs to R', then there is a $\bar{y}_{13}$ such that the point $(y_{13}\ y_{24})$ is in R' if and only if $y_{13} > \bar{y}_{13}$. Furthermore, if $y_{13} > \bar{y}_{13}$, the integrand is positive. Therefore the point $(\bar{y}_{13}, y_{24})$ is necessarily a singularity of F as a function of $y_{13}$.[3] On the other hand, F is certainly an analytic function of $y_{13}$ and $y_{24}$ in R'. Hence R and R' are identical.

The problem is thus to find the region R in which the expression D cannot vanish if x is in T. The region T consists of the interior and boundary of an equilateral tetrahedron. The $x_k$ may then be interpreted as barycentric coordinates. We note that at the vertices ($x_k = 1$, $k = 1, 2, 3$ or $4$) we have $D = 1$. Our procedure will be as follows: we first find a region $R_i$ such that the expression D is positive on every edge of T if and only if $(y_{13}, y_{24})$ is in $R_i$. Next we find a smaller region $R_{ii}$ such that the expression D is positive on every face of T if and only if $(y_{13}, y_{24})$ is in $R_{ii}$. Finally we find the region R for which D cannot vanish at all in T. We are thus led to consider three cases.

<u>Case (i).</u> D can take on nonpositive values on some edge of T. On an edge two x's are equal to zero, e.g., $x_k = x_\ell = 0$. The smallest value that D assumes on such an edge is

$$\text{Min}\left[1\ ;\ \frac{1}{2}(1 + y_{k\ell})\right] . \tag{13}$$

Because of the stability conditions we need consider only the two edges $x_1 = x_3 = 0$ and $x_2 = x_4 = 0$; the region $R_i$ therefore is

$$R_i\ :\ \left\{ y_{13} > -1\ , \qquad y_{24} > -1 \right\} . \tag{14}$$

<u>Case (ii).</u> We assume that $(y_{13}, y_{24})$ is in $R_i$ and consider the possibility that D has a nonpositive value on the face of T defined by $x_k = 0$. Except for the subscripts, the function D is then the same as $D_0$, Eq. (A4), which occurs in the vertex problem. The solution from Appendix A may therefore be used. Accordingly, we introduce six angles between $\theta$ and $\pi$, $\theta_{12}, \theta_{13}, \theta_{14}, \theta_{23}, \theta_{24}, \theta_{34}$ by the conditions

$$y_{k\ell} = \cos\theta_{k\ell}\ , \tag{15}$$

which are to be used only when they are real, i.e., $| y_{k\ell} | < 1$ . Furthermore, let

$$\left.\begin{array}{lll} L_1 = -1 & & y_{23} + y_{34} \geqslant 0 \\ L_1 = \cos(\theta_{23} + \theta_{34}) & & y_{23} + y_{34} < 0 \end{array}\right\}, \tag{16}$$

$$\left.\begin{array}{lll} L_2 = -1 & & y_{14} + y_{34} \geqslant 0 \\ L_2 = \cos(\theta_{14} + \theta_{34}) & & y_{14} + y_{34} < 0 \end{array}\right\}, \tag{17}$$

$$\left.\begin{array}{lll} L_3 = -1 & & y_{12} + y_{14} \geqslant 0 \\ L_3 = \cos(\theta_{12} + \theta_{14}) & & y_{12} + y_{14} < 0 \end{array}\right\}, \tag{18}$$

$$\left.\begin{array}{lll} L_4 = -1 & & y_{12} + y_{23} \geqslant 0 \\ L_4 = \cos(\theta_{12} + \theta_{23}) & & y_{12} + y_{23} < 0 \end{array}\right\}, \tag{19}$$

$$\begin{array}{l} L_{24} = \text{Max}\left[L_1, \ L_3\right] \\ L_{13} = \text{Max}\left[L_2, \ L_4\right] . \end{array} \tag{20}$$

We may then conclude that the region $R_{ii}$ is

$$R_{ii} : \left\{ y_{13} > L_{13} , \qquad y_{24} > L_{24} \right\} . \tag{21}$$

The denominator D is positive on all faces of T if and only if $(y_{13}, y_{24})$ is in $R_{ii}$.

Case (iii). Let $(y_{13}, y_{24})$ be in $R_{ii}$. We must now consider the possibility that D can take nonpositive values in the interior of the tetrahedron T, which means that D has a nonpositive minimum there. This occurs if and only if the following conditions are met:

$$\text{(a)} \qquad y_{12} < 1, \qquad y_{23} < 1, \qquad y_{34} < 1, \qquad y_{14} < 1 ,$$

$$\text{(b)} \qquad 2\pi < \theta_{12} + \theta_{23} + \theta_{34} + \theta_{41} < 2\pi + 2 \operatorname{Min} \left[\theta_{12}, \theta_{23}, \theta_{34}, \theta_{41}\right] ; \tag{22}$$

then the region R is

$$\begin{aligned} R : \quad & \left\{ y_{24} > y_{24}^{(0)}, \quad y_{13} > L_{13} \right\} \\ & + \left\{ y_{13} > y_{13}^{(0)}, \quad y_{24} > L_{24} \right\} \\ & + \left\{ \Delta(y_{13}, y_{24}) > 0 \right\} , \end{aligned} \tag{23}$$

where

$$\Delta(y_{13}, y_{24}) = \left\| \begin{matrix} 1 & y_{12} & y_{13} & y_{14} \\ y_{12} & 1 & y_{23} & y_{24} \\ y_{13} & y_{23} & 1 & y_{34} \\ y_{14} & y_{24} & y_{34} & 1 \end{matrix} \right\| , \tag{24}$$

and where

$$\Delta(L_{13}, y_{24}^{0}) = 0 = \Delta(y_{13}^{0}, L_{24}) \tag{25}$$

define $y_{24}^{0}$ and $y_{13}^{0}$ uniquely. If the conditions (22) are not satisfied, then

$$R = R_{ii} . \tag{26}$$

The algebraic details are described in Appendix B. The regions $R_i$, $R_{ii}$, and $R$ are illustrated in Fig. 2.

The limits used in Eq. (23) may be stated explicitly by solving Eq. (25). They are

$$\left.\begin{aligned} y_{24}^{\,0} &= S_2 = \frac{\cos\theta_{12}\sin\theta_{34} + \cos\theta_{23}\sin\theta_{14}}{\sin(\theta_{14}+\theta_{34})}, \quad L_{13} = L_2 \\ &= S_4 = \frac{\cos\theta_{14}\sin\theta_{23} + \cos\theta_{34}\sin\theta_{12}}{\sin(\theta_{12}+\theta_{23})}, \quad L_{13} = L_4 \end{aligned}\right\} \tag{27}$$

and

$$\left.\begin{aligned} y_{13}^{\,0} &= S_1 = \frac{\cos\theta_{12}\sin\theta_{34} + \cos\theta_{14}\sin\theta_{23}}{\sin(\theta_{23}+\theta_{34})}, \quad L_{24} = L_1 \\ &= S_3 = \frac{\cos\theta_{23}\sin\theta_{14} + \cos\theta_{34}\sin\theta_{12}}{\sin(\theta_{14}+\theta_{12})}, \quad L_{24} = L_3 \end{aligned}\right\} . \tag{28}$$

The function $\bar{y}_{13}$ defined in Eq. (7) may also be directly inferred from Eq. (23) by solving Eq. (24),[4]

$$\begin{aligned} \bar{y}_{13} &= L_{13} && y_{24} > y_{24}^{\,0} \\ &= \frac{1}{1-y_{24}^{\,2}}\Big[y_{12}\,y_{23} + y_{14}\,y_{34} - y_{24}(y_{12}\,y_{34} + y_{14}\,y_{23}) \\ &\qquad - \sqrt{K_1 K_3}\Big] && y_{24}^{\,0} > y_{24} > L_{24} \\ \bar{y}_{13} &= \infty && L_{24} > y_{24} \end{aligned} \tag{29}$$

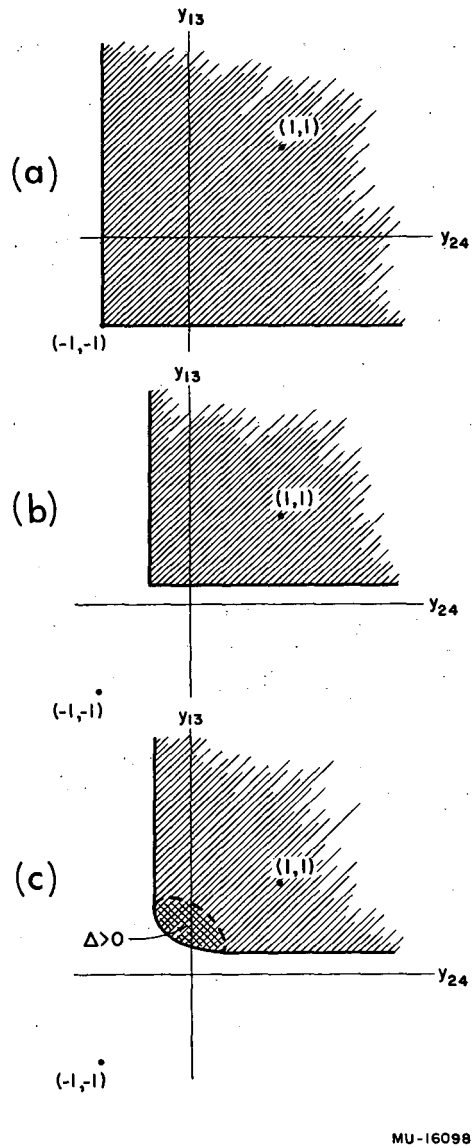


Fig. 2. (a) Region of analyticity of F for $R = R_{ii} = R_i$.
(b) Region of analyticity of F for $R = R_{ii} \subset R_i$.
(c) Region of analyticity of F for $R \subset R_{ii} \subset R_i$.

A great simplification results when the scattering process is the elastic scattering of equal particles with equal internal masses. Then we have

$$y_{12} = y_{23} = y_{34} = y_{14} = y. \tag{30}$$

The boundary of the region R for positive $y$ is

$$\left.\begin{aligned} \bar{y}_{13} &= -1 & y_{24} &> -1 \\ &= \infty & y_{24} &< -1 \end{aligned}\right\} \quad y \geqslant 0 , \tag{31}$$

while for negative y it becomes

$$\left.\begin{aligned} \bar{y}_{13} &= 2\,y^2 - 1 & y_{24} &> 1 \\ &= \frac{4y^2}{1 + y_{24}} - 1 & 1 > y_{24} &> 2\,y^2 - 1 \\ &= \infty & 2\,y^2 - 1 &> y_{24} \end{aligned}\right\} \quad y < 0 \ . \tag{32}$$

We shall examine several scattering processes illustrative of the various cases (Fig. 1). If $p_{12}$ and $p_{14}$ ($-p_{23}$ and $-p_{24}$) are the initial (final) four-momenta, then the total four-momentum squared ($W^2$) and the square of the four-momentum transfer ($-\Delta^2$) are given by

$$W^2 = (p_{12} + p_{23})^2 = (p_{14} + p_{34})^2 > \mathrm{Max}\left[(M_{12} + M_{23})^2,\ (M_{14} + M_{34})^2\right] , \tag{33}$$

$$\Delta^2 = -(p_{12} + p_{14})^2 = -(p_{23} + p_{34})^2 > \mathrm{Max}\left[-(M_{12} - M_{14})^2,\ -(M_{23} - M_{34})^2\right] .$$

The inequalities define the physically accessible regions of $W^2$ and $\Delta^2$. In terms of $y_{13}$ and $y_{24}$, we have

$$y_{13} = \frac{m_1^2 + m_3^2 - W^2}{2\, m_1\, m_3} < \text{Min}\left[ y_{12}\, y_{23} - \sqrt{(1 - y_{12}^2)(1 - y_{23}^2)} \;,\; y_{14}\, y_{34} - \sqrt{(1 - y_{14}^2)(1 - y_{34}^2)} \right] , \tag{34a}$$

$$y_{24} = \frac{m_2^2 + m_4^2 + \Delta^2}{2\, m_2\, m_4} > \text{Max}\left[ y_{12}\, y_{14} + \sqrt{(1 - y_{14}^2)(1 - y_{12}^2)} \;,\; y_{23}\, y_{34} + \sqrt{(1 - y_{23}^2)(1 - y_{34}^2)} \right] . \tag{34b}$$

Suppose we seek a spectral representation of the scattering amplitude in terms of $W^2$ for a fixed physical value of $\Delta^2$. Then the inequality (34b) guarantees that the threshold for $y_{13}$ is $L_{13}$. The "normal" threshold determined by the mass of one real intermediate state is $L_{13} = -1$. Equations (17), (19) show $L_{13} > -1$ only if a sufficient number of $y_{12}$, $y_{23}$, $y_{34}$, $y_{14}$ are sufficiently negative. To see which processes might exhibit "abnormal" thresholds we list in Table I the values of the y's (and corresponding $\theta$'s) for ten possible interactions. We observe that there are only six vertices which have negative y's, and that virtual dissociations of N and $\pi$ are not among them. Thus we conclude that a spectral representation of F for pion-nucleon scattering as a function of $W^2$ would have a threshold $\overline{W}^2$ at

$$\overline{W}^2 = (M_N + M_\pi)^2 ,$$

which is considered normal. We next investigate the diagram for pion-deuteron

TABLE I

Values of y and corresponding θ for ten possible interactions. The table is read with reference to a particular trilinear coupling, for example $\Sigma\ \Lambda\ \pi$. The parameter y and angle θ for the process $\Sigma \rightarrow \Lambda + \pi$ which are

$$\cos\theta = y = (M_\Lambda^2 + m_\pi^2 - M_\Sigma^2)/2\, M_\Lambda\, m_\pi ,$$

are found in the line opposite Σ in the box containing Σ, Λ, π together. There is no need to distinguish particles from antiparticles.

| | y | θ |
|---|---|---|
| D | -.995 | 174° |
| N | .999 | 3° |
| N | .999 | 3° |
| N | .075 | 86° |
| N | .075 | 86° |
| π | .989 | 8° |
| Σ | -.50 | 120° |
| Λ | .58 | 54° |
| π | .994 | 6° |
| Σ | .058 | 86.5° |
| Σ | .058 | 86.5° |
| π | .993 | 7° |
| Ξ | .052 | 87° |
| Ξ | .052 | 87° |
| π | .995 | 6° |

| | y | θ |
|---|---|---|
| K | .14 | 82° |
| K | .14 | 82° |
| π | .96 | 16° |
| Λ | -.13 | 97° |
| N | .55 | 57° |
| K | .90 | 26° |
| Σ | -.31 | 108° |
| N | .66 | 49° |
| K | .92 | 23° |
| Ξ | -.24 | 104° |
| Λ | .57 | 55° |
| K | .93 | 21° |
| Ξ | -.24 | 94° |
| Σ | .44 | 64° |
| K | .93 | 22° |

scattering illustrated in Fig. 3(a). Then

$$L_2 = L_4 = L_{13} = \cos(174^\circ + 8^\circ) = -0.999 > -1 ,$$

$$\overline{W}^2 = (2 M_N)^2 - 0.002 M_N^2 ,$$

which is just slightly different from the normal threshold. For Σ-nucleon scattering (Fig. 3(b)), we have

$$L_2 = L_4 = L_{13} = \cos(86^\circ + 120^\circ) = -0.899 > -1 ,$$

$$\overline{W}^2 = (M_N + M_\Lambda)^2 - 0.202 M_N M_\Lambda .$$

If we do not confine our study to the coupling of particles that have been observed, but also include virtual fields with masses that are limited only by the stability conditions, then the spectral representations have "abnormal" thresholds in many more cases. Some of these have been mentioned in Paper I. Since the general derivations of dispersion relations presuppose a "normal" threshold but do not limit particles in intermediate states to the few kinds that have been observed, these derivations cannot be applied to some cases of interest.

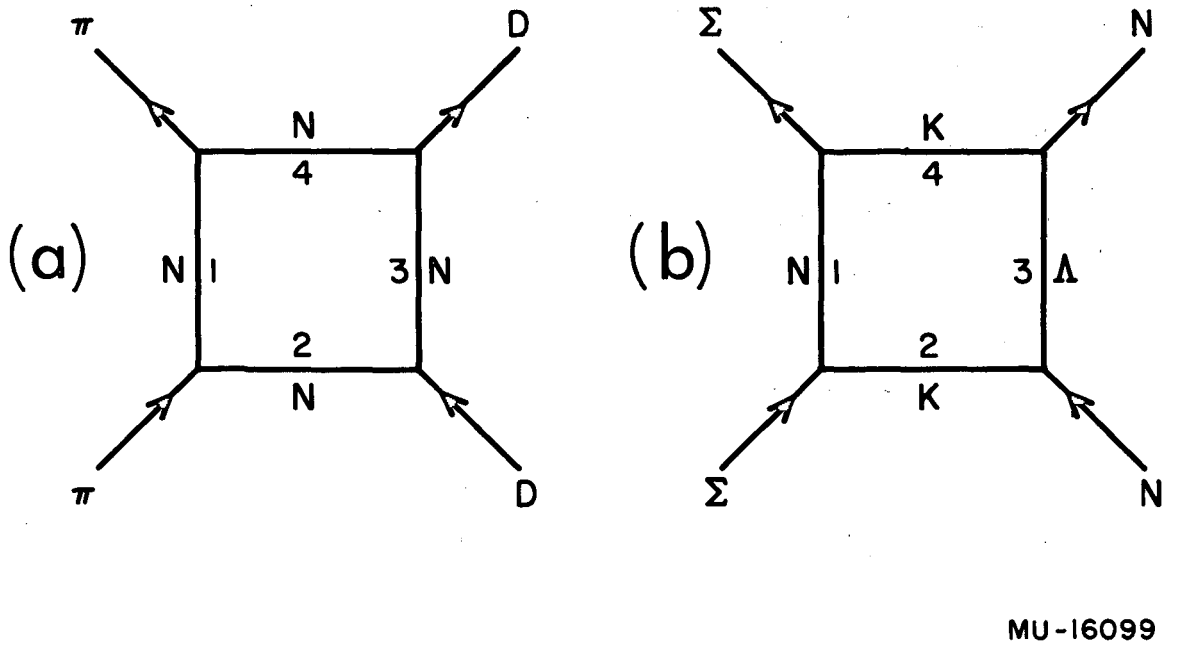


Fig. 3. (a) Feynman diagram for pion-deuteron scattering.
(b) Feynman diagram for Σ-nucleon scattering.

## APPENDIX A

Consider the expression (4) in Paper I for the vertex operator. The substitutions

$$\left.\begin{aligned} -q^2 = M_1^2 &= m_b^2 + m_c^2 - 2\, m_b\, m_c\, y_{23} \\ M_2^2 &= m_a^2 + m_c^2 - 2\, m_a\, m_c\, y_{13} \\ M_3^2 &= m_a^2 + m_b^2 - 2\, m_a\, m_b\, y_{12} \end{aligned}\right\} , \tag{A1}$$

$$\left.\begin{aligned} x_1 &= \frac{m_a\, \alpha}{m_a\, \alpha + m_b\, \beta + m_c\, \gamma} \\ x_2 &= \frac{m_b\, \beta}{m_a\, \alpha + m_b\, \beta + m_c\, \gamma} \\ x_3 &= \frac{m_c\, \gamma}{m_a\, \alpha + m_b\, \beta + m_c\, \gamma} \end{aligned}\right\} , \tag{A2}$$

enable us to rewrite the integral as

$$F = \int_0^1 dx_1 \int_0^1 dx_2 \int_0^1 dx_3 \; \frac{\delta(1 - x_1 - x_2 - x_3)}{(x_1\, m_b\, m_c + x_2\, m_a\, m_c + x_3\, m_a\, m_b)\, D_0} , \tag{A3}$$

$$D_0 = x_1^2 + x_2^2 + x_3^2 + 2(x_1\, x_2\, y_{12} + x_1\, x_3\, y_{13} + x_2\, x_3\, y_{23}) . \tag{A4}$$

The problem is then to investigate under what conditons the denominator $D_0$ can vanish in the range of integration.

We compare this problem with the problem in Case (ii) in the text of this paper to determine the conditions under which the expression D can take nonpositive values on the particular face $x_4 = 0$, and note that the two problems are identical. We are thus to consider $D_0$ when $x_1$, $x_2$, $x_3$ satisfy the conditions $x_1 \geqq 0$, $x_2 \geqq 0$, $x_3 \geqq 0$, and $x_1 + x_2 + x_3 = 1$. We may interpret this region, $F_4$, as the face of an equilateral triangle described by the barycentric coordinates $x_1$, $x_2$, and $x_3$. As in Case (i) in the text, we impose the conditions on the $y_{k\ell}$ which state that $D_0$ cannot vanish on any edge of this triangle, i.e.,

$$y_{12} > -1, \quad y_{13} > -1, \quad y_{23} > -1. \tag{A5}$$

In the case of the vertex operator, two of these conditions can always be interpreted as stability conditions that the physical particles have to satisfy.

Since $D_0$ is positive on the boundary of the triangle $F_4$, $D_0$ can vanish in the interior only if it has a nonpositive minimum there. This minimum may be determined by differentiation, and one must then find the condition that this minimum in fact lies inside $F_4$. We may distinguish two cases:

$$y_{12} + y_{13} \geqq 0 \ , \tag{A6a}$$

$$y_{12} + y_{13} < 0 \quad \text{(in this latter case } y_{12} < 1, \ y_{13} < 1). \tag{A6b}$$

To study the first case, we may assume $y_{12} \leqq y_{13}$. Let

$$\lambda = \text{Min} \left[ 1, y_{12} \right] . \tag{A7}$$

Then we may write

$$D_0 \equiv (x_2 - x_3 + \lambda x_1)^2 + (1 - \lambda^2)x_1^2 + 2\left[x_2 x_3(1 + y_{23}) + x_1 x_2(y_{12} - \lambda) + x_1 x_3(y_{13} + \lambda)\right] . \tag{A8}$$

Each term in this expression is nonnegative, and hence in this case $D_0$ cannot vanish if $y_{23} > -1$.

In the second case we write

$$D_0 \equiv (x_1 + x_2 y_{12} + x_3 y_{13})^2 + \left(x_2 \sqrt{1 - y_{12}^2} - x_3 \sqrt{1 - y_{13}^2}\right)^2 + 2 x_2 x_3 \left[y_{23} - y_{12} y_{13} + \sqrt{(1 - y_{12}^2)(1 - y_{13}^2)}\right] . \tag{A9}$$

Hence $D_0$ is positive if (cf. Eq. (15))

$$y_{23} > y_{12} y_{13} - \sqrt{(1 - y_{12}^2)(1 - y_{13}^2)} = \cos(\theta_{12} + \theta_{13}). \tag{A10}$$

The condition (A6b) takes the form $\theta_{12} + \theta_{13} > \pi$ . We also note that if $y_{23} = \cos(\theta_{12} + \theta_{13})$ and

$$x_1 = -\frac{\sin(\theta_{12} + \theta_{13})}{\sin\theta_{12} + \sin\theta_{13} - \sin(\theta_{12} + \theta_{13})} > 0$$

$$x_2 = \frac{\sin\theta_{13}}{\sin\theta_{12} + \sin\theta_{13} - \sin(\theta_{12} + \theta_{13})} > 0 \qquad \text{(A11)}$$

$$x_3 = \frac{\sin\theta_{12}}{\sin\theta_{12} + \sin\theta_{13} - \sin(\theta_{12} + \theta_{13})} > 0$$

then $D_0 = 0$. Thus the necessary and sufficient condition that $D_0$ be positive on the face $F_4$ is given by the inequality (A10). Comparing the results just obtained with the results in the Appendix of Paper I, we see that they are identical.

A graphical solution to the problem in Paper I may be obtained as follows: In a plane draw three vectors $\vec{m}_a$, $\vec{m}_b$, $\vec{m}_c$ of lengths $m_a$, $m_b$, $m_c$ from a common origin O, such that $|\vec{m}_a - \vec{m}_b| = M_3$ and $|\vec{m}_a - \vec{m}_c| = M_2$. Then the threshold $\mu^2$ of the spectral representation of F as a function of $-q^2$ is $|\vec{m}_b - \vec{m}_c|$, provided that the figure can be drawn at all and provided that the origin O lies inside the triangle determined by the end points of $\vec{m}_a$, $\vec{m}_b$, $\vec{m}_c$. Otherwise the threshold is $(m_b + m_c)^2$.

## APPENDIX B

In this appendix we consider Case (iii) of the text. We let $(y_{13}, y_{24})$ be in $R_{ii}$ so that D cannot vanish on any of the faces $F_1$, $F_2$, $F_3$, $F_4$ of the tetrahedron T. We seek a region $R_{ii}'$ such that D vanishes at some point in the interior of T if and only if $(y_{13}, y_{24})$ is in $R_{ii}'$. We proceed by finding necessary conditions for the existence of a region $R_{ii}'$.

Since D is positive on the boundaries of T, it can vanish inside T only if it assumes a nonpositive minimum inside T. We shall show that if such is the case D can be negative only in the two regions $x_k > 0$ and $x_k < 0$ $(k=1,2,3,4)$ in the four-dimensional Euclidean x space. In particular D is nonnegative on the four hyperplanes $x_k = 0$.

To prove these remarks we observe that since D is a quadratic function of the $x_k$, it can have only one extreme value on any hyperplane. In particular, if--as our assumptions state--on the hyperplane $x_1 + x_2 + x_3 + x_4 = 1$, D has a minimum value within T and is positive on the boundaries of T, then it must be positive throughout the rest of this hyperplane. Now suppose that we evaluate D at some point x' such that $x'_1 + x'_2 + x'_3 + x'_4 = c$. Then the hyperplane $x_1 + x_2 + x_3 + x_4 = c$, passing through x', is parallel to the hyperplane $x_1 + x_2 + x_3 + x_4 = 1$, on which lies the point $x^o$ defined by $x'_k = cx^o_k$. Furthermore $D(x') = c^2 D(x^o)$, and since $D(x^o)$ can be negative only for $x^o_k > 0$, so then can $D(x')$ be negative only in one of the regions $x'_k > 0$ or $x'_k < 0$, depending on the sign of c.

The quadratic form D may be written in diagonal form in many ways, some of which can be obtained from the following by suitable interchange of indices:

$$D = (x_1 + x_2 y_{12} + x_3 y_{13} + x_4 y_{14})^2$$

$$+ (1 - y_{12}^2)\left(x_2 + x_3 \frac{y_{23} - y_{12} y_{13}}{1 - y_{12}^2} + x_4 \frac{y_{24} - y_{12} y_{14}}{1 - y_{12}^2}\right)^2$$

$$+ \frac{K_4}{1 - y_{12}^2}\left(x_3 + x_4 \frac{(y_{34} - y_{13} y_{14})(1 - y_{12}^2) - (y_{23} - y_{12} y_{13})(y_{24} - y_{12} y_{14})}{K_4}\right)^2$$

$$+ \frac{\Delta}{K_4} x_4^2 \quad . \tag{B1}$$

where

$$K_4 = 1 - y_{12}^2 - y_{13}^2 - y_{23}^2 + 2 y_{12} y_{13} y_{23} \; . \tag{B2}$$

In order that D take a nonpositive value, at least one of the coefficients: $1$, $1 - y_{12}^2$, $K_4/(1 - y_{12}^2)$, $\Delta/K_4$, must be nonpositive. But we have just shown that for $(y_{13}, y_{24})$ in $R_{ii}$, D takes a nonpositive minimum inside T only if D is positive definite for $x_4 = 0$. This allows us to conclude that necessary conditions for D to vanish inside T are $|y_{12}| < 1$, $K_4 > 0$, $\Delta \leq 0$. By considering other ways of writing D we find that the region $R_{ii}'$ can be no larger than that defined by[4]

$$|y_{k\ell}| < 1 \tag{B3a}$$

$$K_\ell > 0 \tag{B3b}$$

$$\Delta \leq 0 \; . \tag{B3c}$$

The inequality (B3a) permits us to introduce the real angles $\theta_{12}$, $\theta_{23}$, $\theta_{34}$, $\theta_{14}$ defined in Eq. (15). It then follows from the structure of the $K_i$ that there exists a region in the $(y_{13}, y_{24})$ plane in which condition (B3b) is satisfied if and only if

$$\theta_{12} + \theta_{23} + \theta_{34} + \theta_{14} - 2 \operatorname{Min}\left[\theta_{12}, \theta_{23}, \theta_{34}, \theta_{14}\right] < 2\pi . \tag{B4}$$

Because each $K_i$ depends on $y_{13}$ or on $y_{24}$ but not on both, the region defined by (B3b) is a rectangle with edges parallel to the coordinate axes. The curve

$$\Delta = 0 \tag{B5}$$

lies inside this rectangle and is tangent to all four edges. The situation is depicted in Fig. 4.

Now, it follows from the argument after Eq. (12) that the region $R_{ii}'$ must have in common with $R_{ii}$ those parts of its boundary that separate it from regions of smaller $y_{13}$ and (or) $y_{24}$. For this reason the lines marked $\ell_{13}$ and $\ell_{24}$ in Fig. 4 must actually be $L_{13}$ and $L_{24}$ respectively if there is to be a region $R_{ii}'$, and only the section marked I in Fig. 4 can be a part of $R_{ii}'$. The condition that $\ell_{13} = L_{13}$ and $\ell_{24} = L_{24}$ is

$$\theta_{12} + \theta_{23} + \theta_{34} + \theta_{41} > 2\pi . \tag{B6}$$

The inequalities (B5) and (B6) are necessary conditions for the existence of a region $R_{ii}'$. It is simple to show that the conditions are also sufficient by choosing some point in the region I, Fig. 4, and exhibiting a negative D for some values of the $x_i$ in T.

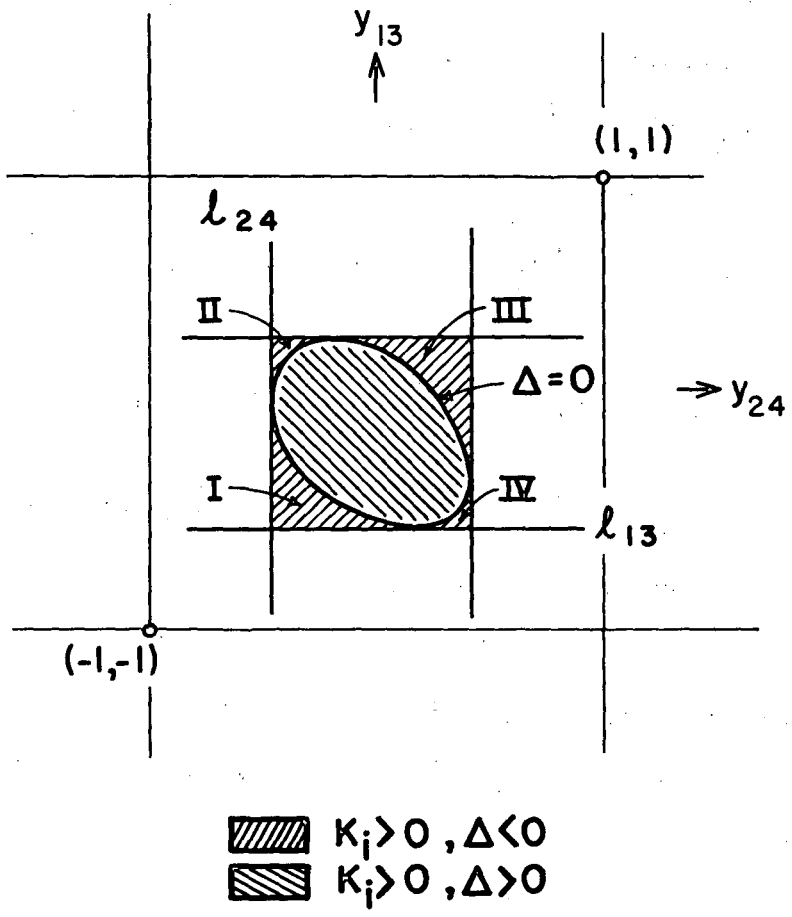


MU-16100

Fig. 4. The regions defined by Eq. (B-3).

The threshold $\bar{p}_{13}^{\,2}$ of a spectral representation of F as a function of $p_{13}^{\,2}$ corresponding to the conditions that allow D to vanish inside T has a graphical construction. Draw, in three dimensions, four vectors $\vec{m}_1$, $\vec{m}_2$, $\vec{m}_3$, $\vec{m}_4$ of lengths $m_1$, $m_2$, $m_3$, $m_4$ from a common origin O. Adjust their directions so that

$$|\vec{m}_1 - \vec{m}_2| = M_{12}, \qquad |\vec{m}_2 - \vec{m}_3| = M_{23},$$

$$|\vec{m}_3 - \vec{m}_4| = M_{34}, \qquad |\vec{m}_1 - \vec{m}_4| = M_{14} \text{ and } p_{24}^{\,2} = |\vec{m}_2 - \vec{m}_4|^2.$$

Then the threshold is $\bar{p}_{13}^{\,2} = |\vec{m}_1 - \vec{m}_3|^2$, provided that the figure can be drawn at all and provided that the origin O lies inside the tetrahedron determined by the end points of $\vec{m}_1$, $\vec{m}_2$, $\vec{m}_3$, $\vec{m}_4$. If this is not the case, draw figures of the type described at the end of Appendix A with the vectors $\vec{m}_1$, $\vec{m}_2$, $\vec{m}_3$ and $\vec{m}_1$, $\vec{m}_3$, $\vec{m}_4$, and obtain the threshold given there.

## REFERENCES

1. Karplus, Sommerfield, and Wichmann, Phys. Rev. 111, 1187 (1958). This will be referred to as Paper I. References to the literature may be found there.

2. R. Oehme and J. G. Taylor (to be published) have treated a variety of general scattering processes without resort to perturbation theory.

3. It may be remarked that if a function is defined by an integral like (2), and if the variables $y_{k\ell}$ are not restricted to be real, then the mere fact that for a certain set of $y_{k\ell}$ the denominator can vanish in the region of integration in no way guarantees that the function has a singularity at this point.

4. The quantities $K_1$, $K_2$, $K_3$, $K_4$ are defined by Eq. (B2) and its appropriate permutations.

## FIGURE CAPTIONS

Fig. 1: Feynman diagram for general scattering process in fourth order.

Fig. 2: (a) The region $R_i$

(b) The region $R_{ii} \neq R_i$

(c) The region $R \neq R_{ii}$.

Fig. 3: (a) Feynman diagram for pion-deuteron scattering.

(b) Feynman diagram for Σ-nucleon scattering.

Fig. 4: The regions defined by Eq. (B3).

This report was prepared as an account of Government sponsored work. Neither the United States, nor the Commission, nor any person acting on behalf of the Commission:

A. Makes any warranty or representation, express or implied, with respect to the accuracy, completeness, or usefulness of the information contained in this report, or that the use of any information, apparatus, method, or process disclosed in this report may not infringe privately owned rights; or

B. Assumes any liabilities with respect to the use of, or for damages resulting from the use of any information, apparatus, method, or process disclosed in this report.

As used in the above, "person acting on behalf of the Commission" includes any employee or contractor of the Commission to the extent that such employee or contractor prepares, handles or distributes, or provides access to, any information pursuant to his employment or contract with the Commission.