UCRL - 8516

UNIVERSITY OF CALIFORNIA

Radiation Laboratory

TWO-WEEK LOAN COPY

This is a Library Circulating Copy
which may be borrowed for two weeks.
For a personal retention copy, call
Tech. Info. Division, Ext. 5545

BERKELEY, CALIFORNIA

DISCLAIMER

This document was prepared as an account of work sponsored by the United States Government. While this document is believed to contain correct information, neither the United States Government nor any agency thereof, nor the Regents of the University of California, nor any of their employees, makes any warranty, express or implied, or assumes any legal responsibility for the accuracy, completeness, or usefulness of any information, apparatus, product, or process disclosed, or represents that its use would not infringe privately owned rights. Reference herein to any specific commercial product, process, or service by its trade name, trademark, manufacturer, or otherwise, does not necessarily constitute or imply its endorsement, recommendation, or favoring by the United States Government or any agency thereof, or the Regents of the University of California. The views and opinions of authors expressed herein do not necessarily state or reflect those of the United States Government or any agency thereof or the Regents of the University of California.

(I. R. E. Transactions on
Nuclear Science Meeting
in San Mateo, November 6-7, 1958.)

UCRL-8516

UNIVERSITY OF CALIFORNIA
Radiation Laboratory
Berkeley, California

Contract No. W-7405-eng-48

NANOSECOND PULSE TRANSFORMERS

C. Norman Winningstad

October 28, 1958

Printed for the U. S. Atomic Energy Commission

NANOSECOND PULSE TRANSFORMERS

C. Norman Winningstad

Radiation Laboratory
University of California
Berkeley, California

October 28, 1958

ABSTRACT

Transformers can be made for impedance matching, pulse inverting, and dc isolation, within the range of about 30 to 300 ohms, with rise times of less than 0.5×10^{-9} seconds, and magnetizing time constants in excess of 5×10^{-7} seconds. Voltage-reflection coefficients of 0.05 or less, and voltage-transmission efficiencies of 0.95 or better can be achieved.

NANOSECOND PULSE TRANSFORMERS

C. Norman Winningstad

Radiation Laboratory
University of California
Berkeley, California

October 28, 1958

SUMMARY

The transmission-line approach to the design of transformers yields a unit with no first-order rise-time limit since this approach uses distributed rather than lumped constants. The total time delay through the transmission-line-type transformer may exceed the rise time by a large factor, unlike conventional transformers. The extra winding length can be employed to improve the low-frequency response of the unit.

NANOSECOND PULSE TRANSFORMER

C. Norman Winningstad

Radiation Laboratory
University of California
Berkeley, California

October 28, 1958

INTRODUCTION

Nuclear research with high-energy accelerators frequently requires time resolution in the range of 10^{-9} second (nanosecond, abbreviated nsec). It is usually found that electronic devices such as multiplier phototubes, ordinary vacuum tubes, diode bridges, and coaxial cables have an optimum impedance level for a desired transient response. In general, the impedance levels for the various devices are different.

The nanosecond region generally requires the use of distributed-constant transmission lines to deliver signal energy from one point to another, if rise-time degradation is to be kept small.[1] For this reason it will be assumed that connections to and from the transformers will be made with transmission lines. Thus the residual capacity or inductance associated with sources and loads will not be considered as a part of the transformer operation, since sources and loads are removed from the transformer, in the time domain, by the transit time through the interconnecting transmission line. The problem of connecting the source or load to a transmission line is well known.[2] The problem is thus simplified to that of driving the transformer from a resistive source Z_0 and exciting a resistive load Z_1.

Usually it is important to minimize reflections since it is not practical, in general, to distinguish between a normal small signal due to a nuclear event, and a small signal that is the product of impedance-discontinuity reflection processes acting on a previously transmitted large signal.

In addition to impedance matching, it is frequently desirable to perform other operations with transformers, such as inverting or dc isolating.

The literature describes the theory of suitably fast transformers,[3, 4] and describes certain examples that are reasonably fast, but which do not give information on transmission loss, reflections, test methods, and core selection. The emphasis in this paper will be on these latter points, with only a brief qualitative review of the well-described theory.

GENERAL

In the usual view, a transformer is considered as a number of lumped linear circuit parameters, perhaps as is shown in Fig. 1. By the process of miniaturization, the high-frequency response can be extended at the cost of low-frequency response and operating level. An analysis of the operation of a transformer based upon Fig. 1 would lead to the conclusion that there is always a first-order limit on the high-frequency response of any transformer, because of the inevitable low pass restrictions of the lumped parameters of the unit. If one refrains from regarding the transformer in terms of the usual circuit methods, but instead regards the problem from the point of view of the electric fields involved, a quite different picture results. Figure 2 shows how one is lead, by field considerations from the usual ideas on how to build a 1:4 impedance-matching transformer, to a more suitable method. The usual approach is to construct a bifilar winding, with the two file connected in series, as shown in Fig. 2a. Instead of using two wires however, one can use the inner and outer conductors of a coaxial cable as the two file; the physical arrangement resulting is shown in Fig. 2b. Figure 2c shows the arrangement of 2b in a way which emphasizes the signal paths from input to output. Note the direct path horizontally from the 50-ohm cable to the 200-ohm cable, with the transformer's cable in series. This provides a path with a very short time delay input to output. There is a second path around the loop provided by the transformer's cable. The second path is delayed in time by the distance around the loop divided by the velocity of propagation within the cable. The result is that the output signal builds up in time by a process involving the summing up, at cable-delay intervals, of the various transmitted and reflected signals circulating within the loop. Note that one cannot choose the impedance of the transformer's cable in such a way as to provide an impedance match simultaneously from left to right and right to left (to match in the 50-ohm direction, the cable would have to be 62 ohms, and 162 ohms for the 200-ohms direction). One observes immediately that the two signal paths with different time delays is the major problem. A little thinking leads one to the equalized version shown in Fig. 2d. This arrangement provides two paths of equal time delay, a first-order perfect match in impedance, and no first-order limitations on rise time. The arrangements of 2b and 2d were made up by using 30 cm of subminiature coax of 100-ohms impedance, wound with 6 turns on a ferrite toriodal core with a rectangular cross section $\frac{1}{4}$ by $\frac{1}{4}$ inch and

with a 1-inch outer diameter. Figure 3 shows the test set up. Note that the output signals (Fig. 4) result from passing through the two cascaded transformers.

The transformers shown in Fig. 5 illustrate the inverter and isolation versions of the equal time-delay approach. The general version of matching $(km)^2$ ohms to $(kn)^2$ ohms requires m times n cables of an impedance $k\,(mn)^{\frac{1}{2}}$, where m and n are the smallest integers stating the turns ratio m/n with sufficient accuracy. The cables are arranged with m rows of n cables, connected in series-parallel, m by n at one end and n by m at the other. One end then has an input impedance m/n times the cable impedance, and the other has an impedance n/m times the cable impedance.

Unfortunately the required transformer cable impedance is frequently not commercially available, or only in an awkward physical size. Since reasonable lengths are usually involved, frequently one can replace the center conductor of a lower-impedance cable with a smaller conductor, determined by the reflection testing method outlined below. In the simpler cases, such as the inverting transformer, it may be desirable to use a parallel line, rather than a coaxial line. In this case, Rudenberg's charts may prove useful as a starting point.[3] In the case where m times n is prohibitively large, one is forced to use miniaturizing techniques in order that the multifilar-winding method may be used with short transit times, i.e., short compared to the desired rise time.

LIMITATIONS

The equal delay mode of operation is degraded by a number of second-order effects. One notes immediately that the simple act of transmitting the signal through the transformer's cables degrades the rise time of an input step.[1, 5, 6] The change required in the distribution of electric fields in going from the signal cable to the transformer's cables requires higher-order modes in the vicinity of the transition. This gives rise to an equivalent capacity,[7] in shunt with an otherwise ideal system, for the principal (TEM) mode signal. There is also a capacity associated with the outside of the transformer's high-potential cable (the details of this capacity will appear below). The dispersive transmission losses are inversely proportional to the square of the diameter of the transformer's cables, and the discontinuity capacities are directly proportional to the diameter. If one divides the rise-time degradation between the discontinuities and the cable transmission, then for the best low-frequency response, one allocates about 80% of the degradation to the capacity problems. This results in the optimum

diameter for the transformer's cable, allowing the longest length of cable, and hence the best low-frequency response, for the given rise time.

The energy that travels from input to output by going into the interfilar spaces (inside the coaxial lines) is usually referred to as traveling in the transmission-line mode (TLM). Energy traveling in the extrafilar space (outside the coaxial sheath) is referred to as traveling in the coil mode (CM). The CM path is undesirable because it takes energy from the TLM. In addition, there is the possibility that the energy launched down the CM will not be dissipated and hence may return as an undesirable delayed input to the TLM. The CM path is not easily stated in complete detail because it usually involves varying impedances (variable spacing and path media), varying modes (TEM, helical, etc), and varying velocities (not only in different regions, because of media changes, but also due to dispersive media). Fortunately, as will be seen below, with an appropriate choice of geometry and ferrite core it will usually not be necessary to consider the CM path as being any more complicated than a shunt path composed of an air-spaced transmission line of average impedance connected in series to a high-impedance lossy line shorted at the far end. The air-space line corresponds to the portion of the CM path starting at the junction with the TLM and continuing to where the CM fields interact significantly with the core. The air-spaced path should be kept as short as is practical, since it is difficult to obtain more than a few hundred ohms impedance. If this section is short in double-transit time compared to the rise time involved, then it may be considered as a shunt lumped capacity. Because the core portion of the CM path is very lossy and dispersive, one can account for the operation over a small range with reasonable accuracy with a lumped resistance to correspond to the line impedance (no fast reflections return) shunted by an inductance to account for the approximately differentiating decay.

CORE EVALUATION

Since a limit on the rise time is the length of the transmission line used, one wishes to obtain as high an impedance in the CM and as long a decay time constant as is possible for the given length of line. The shunting equivalent resistance and inductance values are approximately directly proportional to the square of the turns and the core cross sectional area. The inductance is inversely proportional to the mean core circumference. For this reason, one should use a toroidal core with a square cross section (round would be slightly better, but manufactured toroids are not usually made this way). The over-all

size of the core should be made as small as possible, limited by either window size or saturation of the core.

In order to find cores which are of practical value, a testing arrangement was made as shown in Fig. 6. By placing various toroids with various windings across the transmission line between the generator and the oscilloscope, one can observe the amount of loading introduced into the system.[8] By plotting the normalized amplitude against time on semilogarithmic paper, one can deduce the values of R and L according to the equivalent circuit of Fig. 7. The value of R is found from the initial value of the output voltage, and then the decay time constant is evaluated from the slope of the semilogarithmic curve. Knowing the time constant and the circuit impedance level, one can calculate inductance. By measuring the values of R and L for different sized samples with different numbers of turns at different impedance and voltage levels, one can plot values of R_0 and μ, where R_0 is the quotient of the R values divided by the product of the square of the number of turns used and the core cross-sectional area; μ is calculated from the usual formula relating toroidal inductance and permeability. In these tests, the transit time for the length of the winding used was less than the rise time of the system.

The decay curves on semilogarithmic paper are not perfectly straight. The curves imply that the effective permeability increases with time. This effect is presumed to be due to the velocity of propagation in the ferrite. A depth-of-penetration effect in tape-type cores was investigated by Moody.[9] Unfortunately the ferrites investigated do not seem to follow a simple law (Moody found the effective permeability varies as the square root of time for thin tape-type cores), and thus one is provided with an interesting possibility for further investigation. The simplicity of the construction of nanosecond pulse transformers makes practical empirical methods using the approximate values of μ and R_0 given below. These values should be reasonably valid for core sizes of the order of centimeters windings of 1 to 8 turns, and pulse lengths of 10 to a few hundred nanosec. The ferrites tested included Ferroxcube Corporation of America's FXC 3, 3C, 101, 102, 104, 105; Lignes Telegraphiques et Telephoniques (France) LTT, 1002, 1003, 1101, 1102, 1103; General Ceramic and Steatite Corporation's Ferramic Q; General Electric's CQ22. Of the many tested types, those exhibiting a well-behaved decay with an effective μ and R_0 of more than 200 and 1000 ohm/cm^2, respectively, were selected as suitable for this application and are shown in Table I.

Various powdered-iron and tape cores were tried also, but like FXC 3 and 3C and LTT 1002, were not listed because of too low a value of R_0. The FXC 105, LTT 1100 series, Ferramic Q, and CQ22 were not used because the value of μ was too low.

Table I

Ferrite toroidal core properties

Type	μ	R_0 (Ohms/cm^2)	Saturation Flux Gauss	μ_0
FXC 101	400 to 700	2500 to 4500	2300	1200
102	250 to 400	4000 to 6000	2500	655
104	200 to 250	over 6000	3600	200
LTT 1003	1200 to 2000	700 to 1200	4800	1250

TRANSFORMER SYNTHESIS

From the rise time specification, one can arrive at the transformer's cable size. A rough estimate can be made by assuming that the rise time will be limited to about 0.8 of the specified value by the equivalent capacity lumps associated with entering the cables, and about 0.6 of the specified rise time because of the cable deficiencies. There are two restraints on the maximum diameter of the transformer's coaxial cable. One is that the double-transit time around the first CM turn be a small fraction of the rise time. This is to prevent poor operation because of the time position of reflections on the CM; if one assumes a reasonable bending diameter around the toroid's cross section of 5 cable diameters, then the cable diameter should be in the vicinity of 0.2 inch or less per nsec of rise time. The second restraint introduces the effect of the impedance level of the circuit. The discontinuity capacity is usually small (about 0.1 picofarads/cm of cable diameter) compared to the equivalent capacity of the short section of CM air transmission line (about 5 picofarads/cm of cable diameter, if one assumes again that the CM air line is formed by the first turn bent on a 5 cable-diameter cross-section toroid). With the maximum permissible diameter selected, one then calculates the length of cable which is permissible.[1,5] With a core cross section of 5 by 5 cable diameters, one can calculate the number of turns which will use a length of cable having a transit time about equal to the rise specified. If this uses up all the cable, then toroid's inner diameter should

be arranged so that the available number of turns just fills up the window. If there is cable left over after deducting a length equal to the space occupied by a rise time, one should wind the length equal to a rise time on a small toroid, chosen to have a full window, and then wind the remaining cable on a core of high permeability, such as a tape core. The ferrite core, which is of a type chosen by the method described below, will provide the proper isolation of the CM from the high-frequency components of the signal, while the tape core will provide additional low frequency response. The ferrite core is chosen by calculating the permissible shunt R from the permissible value of transmission loss and reflection. By dividing the permissible R by the number of turns squared and the toroid's cross-sectional area, one obtains the required value of R_0. One then chooses the material with the highest μ that will meet the required value of R_0. If the R_0 values are all greater than needed, then tape cores may be useful. If a larger value of R_0 is needed, then the ferrites not listed in Table I but mentioned as having low values of μ may prove useful, but careful testing will be necessary. With the value of μ selected from the table, one can then calculate the value of the shunt L (taking into account if necessary the presence of additional tape cores), and hence the low-frequency response, or differentiating time constant. The saturation level can also be calculated. If either the low-frequency or saturation specifications fall short, then the problem is out of range of the available materials. There is typically a factor of 5 in volt-seconds between the point of 2% output loss and 90% output loss due to saturation.

TESTING

The time-domain method of testing is usually quickest, if the rise-time requirements are not faster than about $\frac{1}{2}$ nsec. When within the speed range, time-domain observation of reflections allows one to observe the time position (and hence spatial position) and character of various discontinuities with a far greater facility than with standing wave ratio, frequency-domain tests. At speeds faster than $\frac{1}{2}$ nsec, frequency domain testing is a necessary evil because of the lack of suitable step generators. Figure 8 shows a typical reflection test set up. The system of Fig. 3, i.e., cascading transformers, is very useful for observing cases where the rise-time degradation, transmission losses, or differentiation is very small.

EXAMPLES

Figure 9 shows a 125-ohm inverting transformer constructed within the parts of two standard 125-ohm connectors. An FXC 208 F125-102 core is used. A bifilar winding is used consisting of 12 cm each of No. 26 Formvar-insulated wire forming 7 equally spaced turns. This unit has a rise time of less than 1/3 nsec and a transit time of about 0.55 nsec. Figure 10 shows some examples of the miniaturization approach. The units were required to have matching ratios of 4:5 and 2:3. Since these ratios made the use of transmission-line techniques awkward (requiring 20 and 6 cables, respectively), and the low-frequency requirements were not too strict, conventional multifilar windings were made. By restricting the lengths of wires to a few centimeters, the rise times obtained and the delay are about 0.4 nsec. The differentiation time constant is about 640 nsec (about 3 db down at 250 kc). The voltage coefficient of reflection and the transmission loss are both less than 5%. There is less than 2% saturation effect up to 5 microvolt-seconds.

ACKNOWLEDGMENT

This work was done as a part of the fast-circuitry program of the Counting Research Group under the direction of Quentin A. Kerns. Special thanks are due Emery T. Clark, who very patiently tested most of the toroids.

This work was sponsored by the U. S. Atomic Energy Commission.

REFERENCES

1. Quentin A. Kerns, Nucleonics 14, 45, (April, 1956).
2. I. A. D. Lewis and F. H. Wells Millimicrosecond Pulse Techniques (McGraw-Hill, New York, 1954), section 6.2.2.
3. H. Gunther Rudenberg, The Distributed Transformer, Raytheon Mfg. Co., Waltham, Mass., April 1952.
4. A. I. Talkin and J. V. Cunse, Rev. Sci. Instr. 28, 808, (1957).
5. Kerns, Kirsten, and Winningstad, Counting Note: Pulse Response of Coaxial Cables, File No. CC2-1 of UCRL-3307, January 1956.
6. R. Wigington, N. Nahman, Proc. IRE 45, 166 (Feb. 1957).
7. Whinnery, Jamieson, and Robbins, Proc. IRE 32, 695 (1944).
8. C. Norman Winningstad, Rev. Sci. Instr. 29, 578 (1958).
9. Moody, McLusky, and Deighton, Electronic Engineering 24, 217 (1952).

FIGURE LEGENDS

Fig. 1. Conventional transformer equivalent circuit using lumped circuit parameters.

Fig. 2. Evolution of a 1:4 impedance-matching transformer showing: (a) conventional schematic, (b) bifilar realization, (c) bifilar version redrawn to illustrate two signal paths, (d) equalized version.

Fig. 3. Test arrangement to compare Fig. 2 transformers, the length of the coaxial cables is equivalent to about 10 nsec.

Fig. 4. Oscillograms of Fig. 3 test system showing: (top) input "step" (center) conventional bifilar version response (bottom) TLM version. (5 nsec/division)

Fig. 5. (a) Inverting TLM transformer. (b) Isolating TLM transformer.

Fig. 6. Test arrangement to observe shunt parameters.

Fig. 7. Equivalent circuit of Fig 6, in which we have

$$\eta = \frac{E_0}{E_{in}} = \frac{2R}{Z_0+2R}, \quad R = \frac{\eta}{1-\eta}\,\frac{Z_0}{2}, \quad \tau = \frac{L}{RZ_0/2R+Z_0}, \text{ and } L = \eta\frac{Z_0}{2}\,\tau .$$

Fig. 8. Reflection testing system. Incident signal enters traveling-wave vertical section in reverse. Reflected signal enters in the forward direction.

Fig. 9. Inverting transformer, 125-ohm, TLM type.

Fig. 10. Impedance matching transformers, minaturized type.

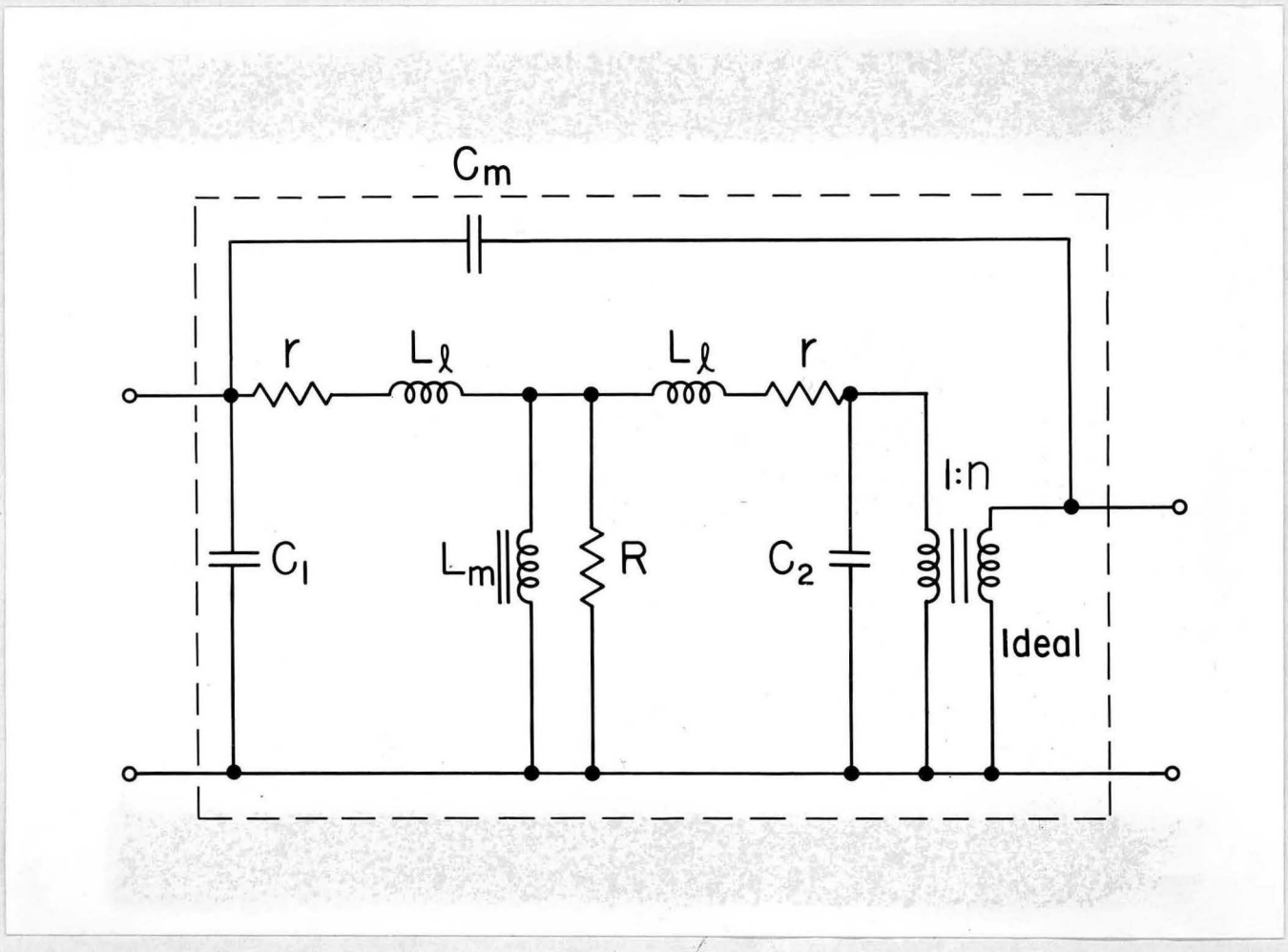

Fig. 1

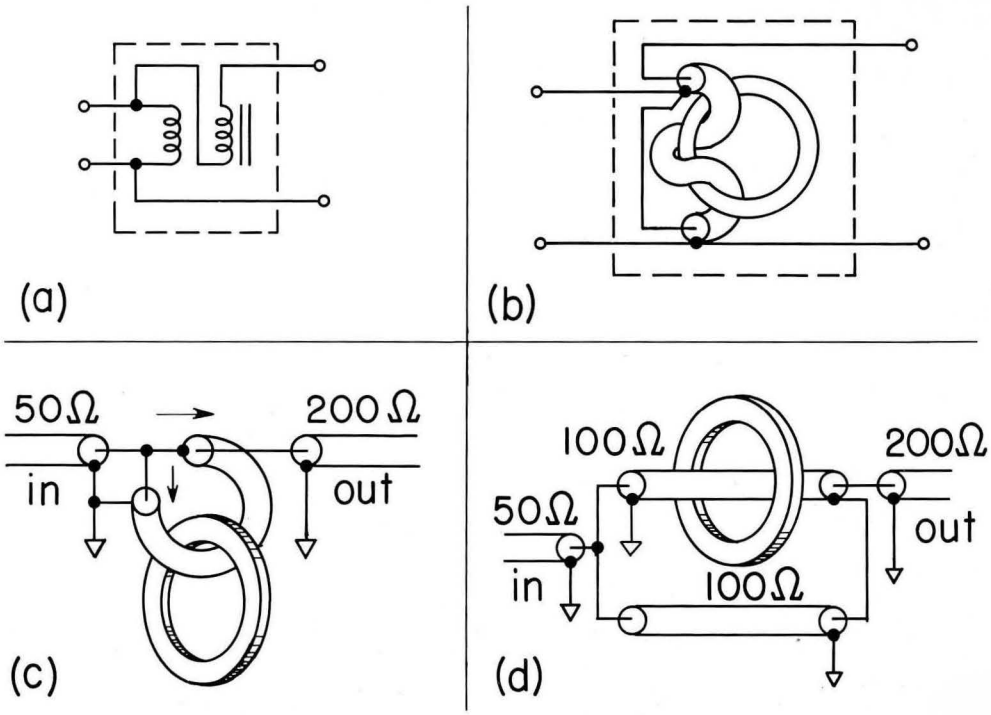

Fig. 2

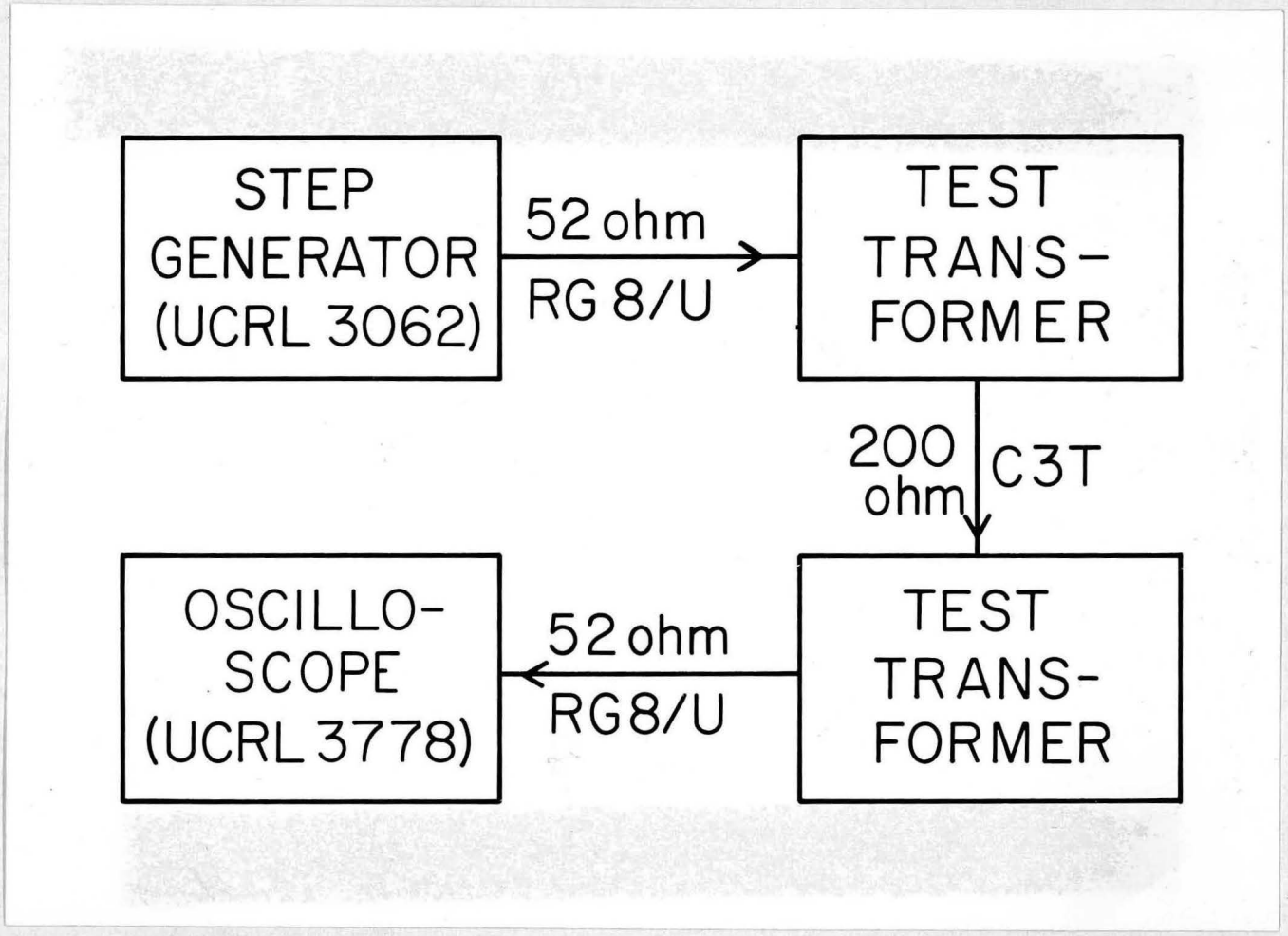
STEP GENERATOR (UCRL 3062)
52 ohm RG 8/U
TEST TRANS-FORMER
200 ohm
C3T
TEST TRANS-FORMER
52 ohm RG8/U
OSCILLO-SCOPE (UCRL 3778)

Fig. 3

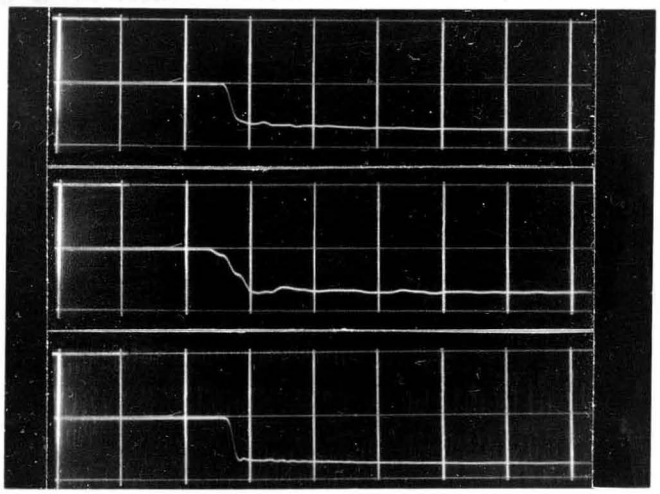

Fig. 4.

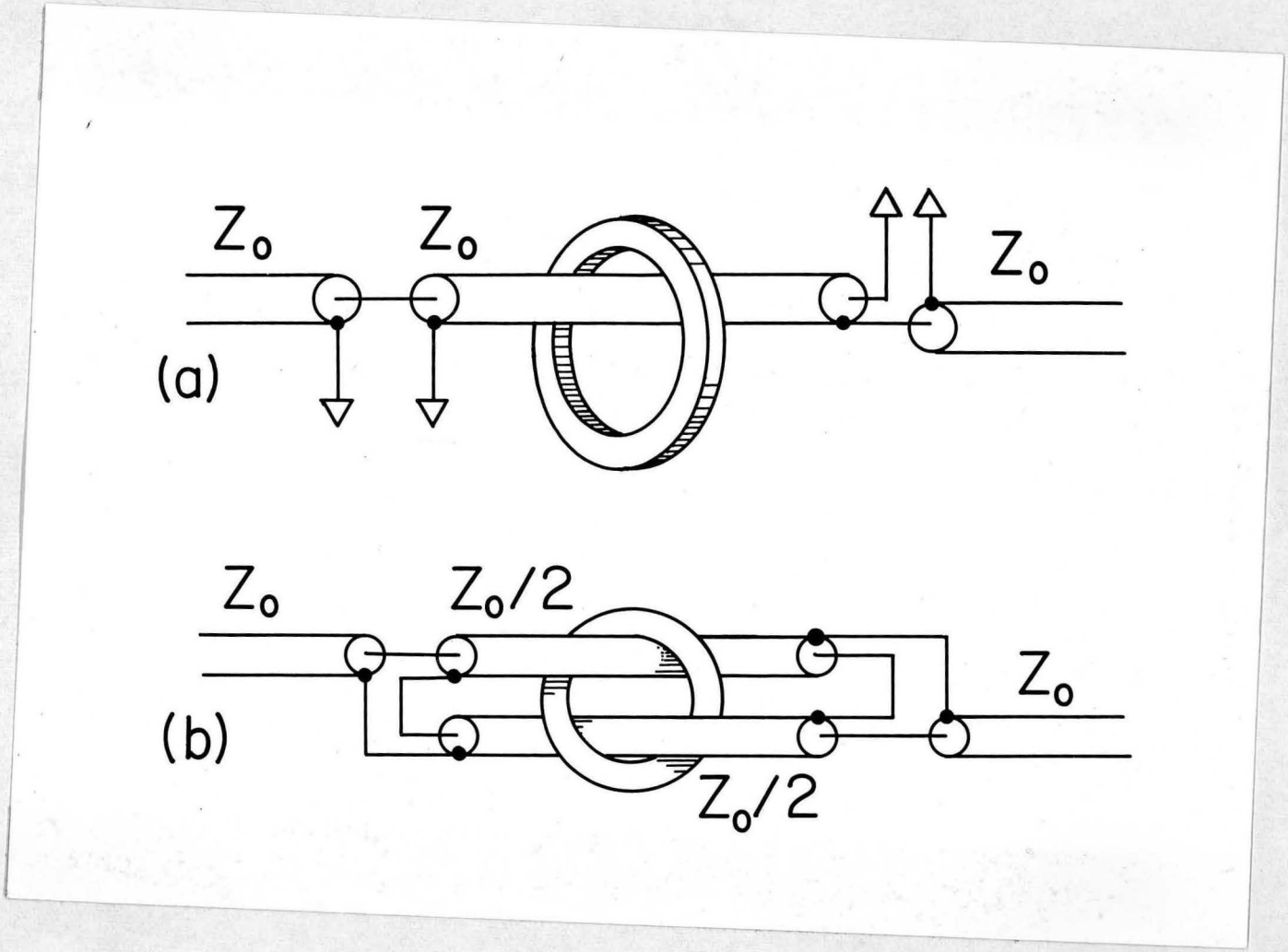

Fig. 5

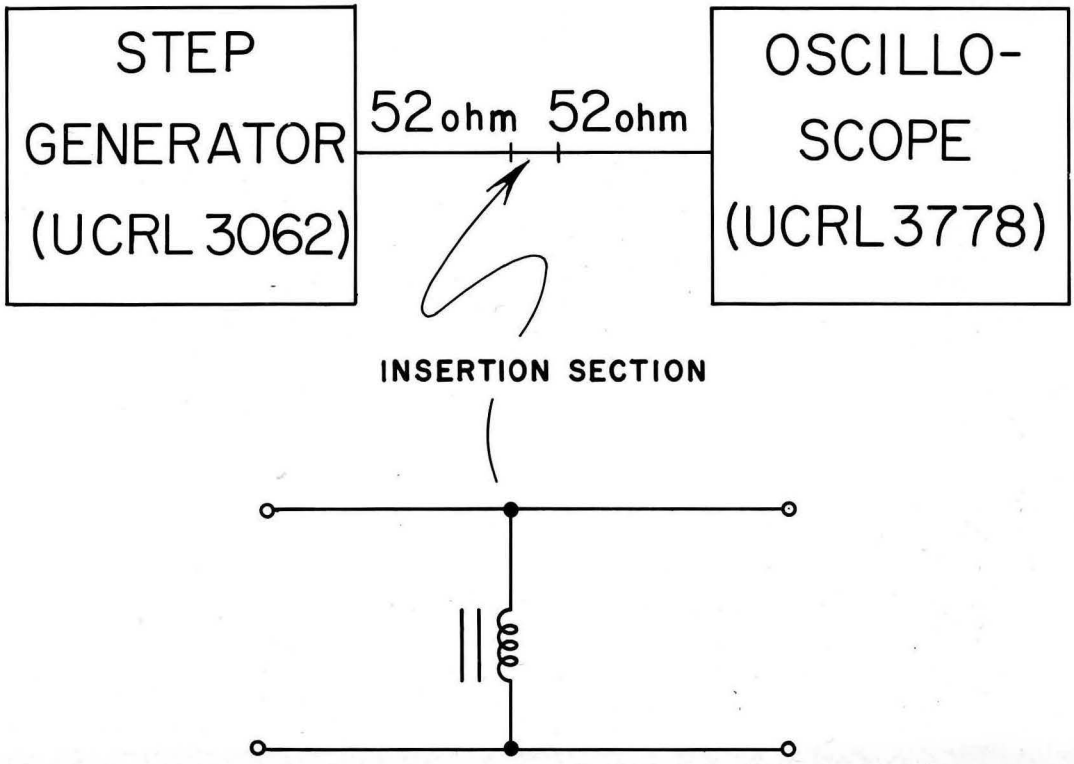
STEP
GENERATOR
(UCRL 3062)
52 ohm
52 ohm
OSCILLO-
SCOPE
(UCRL 3778)
INSERTION SECTION

Fig. 6

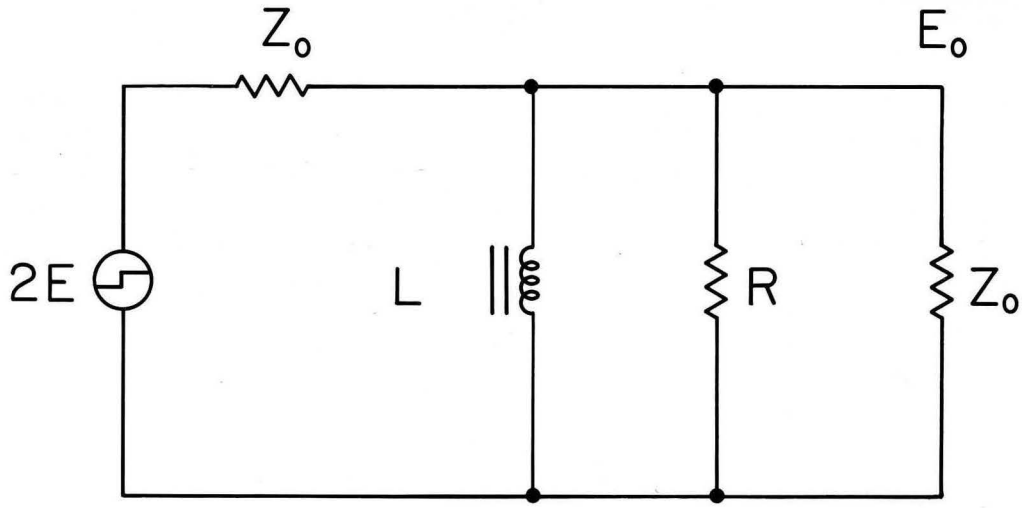

$$\eta = \frac{E_0}{E_{in}} = \frac{2R}{Z_0 + 2R} \qquad R = \frac{\eta}{1-\eta}\,\frac{Z_0}{2}$$

$$\tau = L/RZ_0/2R+Z_0 \qquad L = \eta\,\frac{Z_0}{2}\,\tau$$

Fig. 7

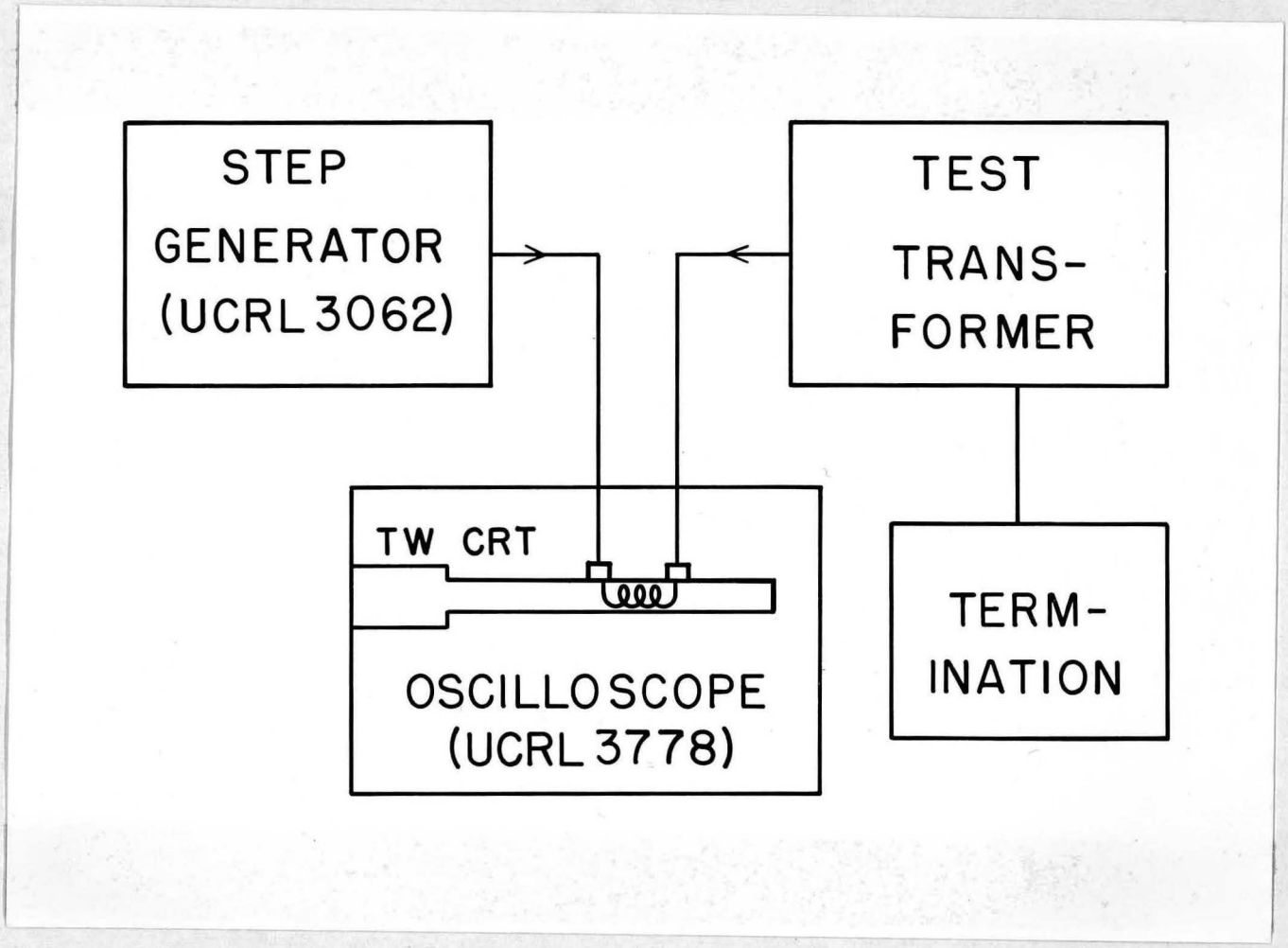
STEP
GENERATOR
(UCRL 3062)
TEST
TRANS-
FORMER
TW CRT
OSCILLOSCOPE
(UCRL 3778)
TERM-
INATION

Fig. 8

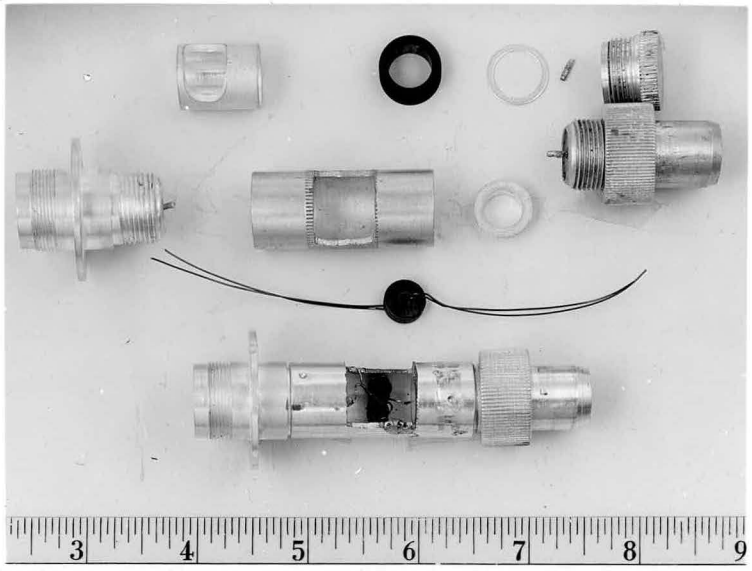

FIG. 9

Fig. 10

WESTON BOND