UCRL 8520 Rev

UNIVERSITY OF CALIFORNIA

Ernest O. Lawrence

Radiation Laboratory

TWO-WEEK LOAN COPY

This is a Library Circulating Copy which may be borrowed for two weeks. For a personal retention copy, call Tech. Info. Division, Ext. 5545

BERKELEY, CALIFORNIA

DISCLAIMER

This document was prepared as an account of work sponsored by the United States Government. While this document is believed to contain correct information, neither the United States Government nor any agency thereof, nor the Regents of the University of California, nor any of their employees, makes any warranty, express or implied, or assumes any legal responsibility for the accuracy, completeness, or usefulness of any information, apparatus, product, or process disclosed, or represents that its use would not infringe privately owned rights. Reference herein to any specific commercial product, process, or service by its trade name, trademark, manufacturer, or otherwise, does not necessarily constitute or imply its endorsement, recommendation, or favoring by the United States Government or any agency thereof, or the Regents of the University of California. The views and opinions of authors expressed herein do not necessarily state or reflect those of the United States Government or any agency thereof or the Regents of the University of California.

UCRL-8570 Rev.

UNIVERSITY OF CALIFORNIA

Lawrence Radiation Laboratory
Berkeley, California

Contract No. W-7405-eng-48

GAS CHERENKOV COUNTERS

John H. Atkinson and Victor Perez-Mendez

April 24, 1959

Printed for the U. S. Atomic Energy Commission

GAS CHERENKOV COUNTERS

John H. Atkinson and Victor Perez-Mendez

Lawrence Radiation Laboratory
University of California
Berkeley, California

April 24, 1959

ABSTRACT

A gas Cherenkov counter is described which is suitable for charged-particle detection in the Bev region (β from 0.980 to 0.999). Calibrations of the counting efficiency are included along with a table of indices of refraction of suitable gases. The use of this counter as a threshold detector to discriminate between elastic and inelastic pions in the momentum range of 1 to 2 Bev/c is discussed. Use of the counter to differentiate between charged particles of different mass in a momentum-analyzed beam is also considered.

GAS CHERENKOV COUNTERS*

John H. Atkinson and Victor Perez-Mendez

Lawrence Radiation Laboratory
University of California
Berkeley, California

April 24, 1959

I. INTRODUCTION

The Cherenkov effect has been used increasingly during the past few years as a means of detecting and identifying high-energy particles. Many types of counters have been constructed to serve various purposes such as the identification of particles of mass m_1 from a flux of particles of mass m_2 which have the same momentum. From the theory of Frank and Tamm,[1] the Cherenkov radiation is confined to a narrow conical shell about the direction of the incoming particle with the opening angle θ of the cone given by $\cos\theta = 1/n\beta$. Also, the number of light quanta with frequencies between ν and $(\nu + d\nu)$ per unit length of path of the particle with charge e is given by

$$N(\nu)\,d\nu = 4\pi^2 \frac{e^2}{hc^2}\left(1 - \frac{1}{n^2\beta^2}\right) d\nu\,, \qquad (1)$$

where n is the index of refraction. For a singly charged particle integrated from 3500 to 5600 A(the spectral response of the S11 photocathode) we have

$$N = 490\left(1 - \frac{1}{n^2\beta^2}\right), \qquad (2)$$

where N is the number of quanta per centimeter of path length. The velocity selection may be accomplished either by detecting the Cherenkov light within a given angular range, or by using the threshold properties of

*This work was done under the auspices of the U. S. Atomic Energy Commission.

the Cherenkov effect, i.e., $\beta = \frac{1}{n}$.

In practice the correlation between β and the angle of the Cherenkov light can be used in a velocity-selecting device for particles with values of β less than 0.99 where the differential change in β corresponds to a physically usable angular interval.[2] However, for higher-energy particles with values of β greater than 0.990, the change in angle versus β is too small to be readily useful, and hence it is more practical to use the threshold properties of the Cherenkov effect in this energy region.

This report describes the construction and performance of a Cherenkov counter for the detection of particles with values of β ranging from 0.980 to 0.999. The corresponding values of index of refraction for the threshold of the Cherenkov effect range from 1.0204 to 1.00100, which necessitates the use of a radiator in the gaseous phase.

II. DESCRIPTION OF COUNTER

The counter assembly is shown in Fig. 1. The gas radiator is contained in the cylindrical steel shell which is 6 ft long and 4 in. in diameter. The inner surface of the cylinder is made reflecting by having a thin shell of polished aluminum rolled into it. Standard 4-in. pipe flanges are used throughout to simplify the construction. The Cherenkov light is deflected from the beam at the rear of the radiating cylinder by a 45° plane, front-aluminized mirror. This mirror reflects the light up 90° through a Lucite window onto a photomultiplier tube. The window (3/4-in. thick) makes a pressure seal to the gas container and can be used up to pressures of 150 lbs/in.^{2}. The small aluminum cone in front of the Lucite

window has a polished inner surface and serves to collect the light produced by particles that traverse the radiator cylinder slightly off-axis.

The photomultiplier tube is a 16-stage RCA C7232A tube and has its cathode window in optical contact with the Lucite window via a thin layer of silicone grease. Adequate magnetic shielding for operation around the Bevatron is provided by a 1/16-in. mu metal shield and the 1/4-in. iron walls of the multiplier housing.

In order to decrease the number of noise pulses, the photomultiplier is maintained at dry-ice temperature by enclosing its housing in a Styrofoam box filled with dry ice. The photomultiplier housing has then to be airtight to prevent moisture from condensing inside the socket assembly. Also, the gas in the counter must be very dry to prevent frost, which obscures the optical path, from forming on the Lucite window. Silica gel bags packed in the counter under the turning mirror and silica gel refrigeration dryers in the filling lines accomplish this satisfactorily.

III. PERFORMANCE

The detection efficiency of this counter for counting particles was investigated experimentally using a monochromatic beam of pions from the Bevatron with a momentum of 3.0 ± 0.1 Bev/c ($\beta = 0.9989$).

The experimental arrangement is shown in Fig. 2. The momentum of the pion beam was determined by a wire orbit measurement and the momentum spread estimated from the size of the entrance and detection slits.

A block diagram of the counting arrangement is shown in Fig. 3. The efficiency of the Cherenkov counter is defined as the ratio of the number of counts of the monitor scintillators and Cherenkov counter in coincidence $(C_1 + C_2 + C_3 + C_4)$ to that of the monitor $(C_1 + C_3 + C_4)$. The gain level at which the Cherenkov counter produces a pulse which is recorded was set by the triggering level of the fast discriminator.[3] This level was set at 2 volts into the coincidence circuit and was periodically checked by an electronic pulse generator.

The detection efficiency of the Cherenkov counter was measured as a function of the index of refraction for various values of the voltage on the photomultiplier tube. Figure 4 shows the curve obtained in this manner plotted vs. the pressure of the gas in the counter.

The leading edge of the threshold sensitivity curves shown in Fig. 4 is presumably due to the small electron contamination which is usually present in pion beams. A factor contributing to the slope of the threshold curve is the spread in momentum of the incident pion beam. Figure 5 shows these efficiency curves with the electron background subtracted out and the slopes corrected for the Δp of the pion beam assuming a rectangular distribution in p.

The gain of the photomultiplier tube as a function of voltage was measured independently by the use of a calibrated light source.[4] The current amplification of the tube as a function of the supply voltage is shown in Fig. 6. The magnitude of the output voltage pulses produced by charged particles traveling through the radiator gas can be written as $V_g = Ag\left[1 - (1/n^2\beta^2)\right]$, where g is the current amplification of the phototube,

and A is a constant of the counter which includes the photon-collection efficiency, the transmission through the Lucite window and cathode glass, and the average cathode efficiency. Figure 7 shows the curve V_g plotted for these different gains of the photomultiplier (supply voltages of 2050, 1950, 1850 volts) in arbitrary units. The discrimination level corresponding to a 2-volt output is shown as the horizontal line intersecting the three curves. The intercepts thus give the effective working threshold relative to the absolute threshold, which is defined by the Cherenkov condition $\beta = 1/n$. For 1950 volts this effective threshold (90%) corresponds to approximately 213 photons produced in the radiator volume.

IV. REFRACTIVE INDICES

Accurate indices of refraction for gases appropriate for Cherenkov counter use are not readily available. Table I is a collection of indices of refraction from standard reference sources.

When these counters were built there was some doubt as to whether the equations of the state for the gases used in our counters (SF_6, CCl_2F_2) and the Lorenz-Lorentz Law were adequate to give the index of refraction to the required accuracy. Therefore, we measured the index of refraction of both these gases by an interferometric method as a function of gas densities. Figures 8 and 9 show the experimental points thus measured for both SF_6 and CCl_2F_2. The solid lines in the figures are the theoretical curves obtained from the Lorentz-Lorenz Law:

$$R_m = \frac{n^2 - 1}{n^2 + 2} \quad \frac{M}{d} \tag{3}$$

Table I

Index of refraction of gases[a]
Values are given for a temperature of 0°C and 760 mm, pressure

Gas	Index of refraction	Wavelength (A)
Acetaldehyde	1.000296	5893
Acetone	1.001079	5893
Acetylene	1.000610	5893
Argon	1.000283	5893
Carbon Dioxide	1.000449	5791
Freon 12 (CCl_2F_2)	1.001150	5461
Hydrogen iodide	1.000911	5791
Krypton	1.000427	5770
Methane	1.000439	5893
Nitrogen	1.000296	5893
Sulfur hexafluoride	1.000783	5893
Sulfur trioxide	1.000737	5893
Xenon	1.000702	5791

Information is taken from International Critical Tables, Vol. VII (McGraw-Hill, New York, 1950), pp. 6 to 11; William E. Forsythe, Smithsonian Physical Tables (Smithsonian Institution, Washington, D. C., 1954), Table 554, 533; and from Figs. 8 and 9 of this paper.

where R_m is the molar refractivity,[5] n the index of refraction, M the molecular weight, and d the density.

V. CONCLUSION

Two gas-filled counters of the type described above have been in use during the past year as threshold detectors for pions of energy $E_\pi > 3$ Bev.[6] During this time their performance has been very satisfactory.

The shape of the threshold efficiency curves were measured recently in order to determine whether the efficiency-curve threshold would be sharp enough to permit using these counters as detectors for high-energy particles in elastic-scattering experiments. The minimum energy loss that distinguishes an inelastic event is approximately 150 Mev and corresponds to the production of a single pion, with the remaining particles taking off the maximum energy available from the kinematics of the reaction.

From Fig. 5 and Eq. (2) the number of photons produced for 90% counting efficiency (213) and 10% efficiency (71) at 1950 volts may be calculated. Since the phototube is sensitive only in a limited spectral range these photon numbers are a constant of the counter. Using Eq. (2) we can now calculate the π momentum spread between 90% and 10% efficiency when the pressure in the counter, determining n, is set to give 90% counting efficiency at a given momentum. Table II gives the results of this calculation.

Table II

Counting Efficiency for π Mesons

p (90%) (Bev/c)	p (10%) (Bev/c)	Δp (90% - 10%) (Mev/c)
3.00	2.12	620
2.00	1.74	260
1.50	1.38	120
1.00	0.960	40

Table II also indicates that these counters are presently most effective in discriminating between elastic and inelastic events in the momentum range of 1.0 to 1.5 Bev/c. This range may be extended to lower momenta by increasing the index of refraction (higher pressures) and to higher momenta by lengthening the radiator.

Another, perhaps more useful, function of the counter is to differentiate between charged particles of different mass in a momentum-analyzed beam. As β approaches one quite closely for all fundamental particles in the Bev region, the ability to discriminate between particles of the same momentum but different rest masses will have an upper momentum (or energy) limit which is a function of the threshold-efficiency slope of the counter and the masses of the particles. Again using Eq. (2), the physical constants of our counter as calibrated, and the condition of equal momentum for both mass particles, we derive directly the following relation for the upper limit on β:

$$\beta_1^{\,2} = 1 - \frac{m_1^{\,2}}{m_2^{\,2} - m_1^{\,2}} \left(\frac{c_1 - c_2}{1 - c_1} \right) . \qquad (4)$$

This expression gives the maximum velocity (β_1) at which the counter will distinguish between a particle of lighter rest mass m_1 and a particle of heavier rest mass m_2 of equal momentum by counting particles of mass m_1 with an efficiency of 90% and particles of mass m_2 with an efficiency of 10%. The counter calibration gives c_1 at 90% for m_1 particles and c_2 at 10% for m_2 at 10% where $c_{1,2} = \left[1 - (1/n^2\beta^2_{1,2})\right]$. Thus, to eliminate particles of higher rest mass, the counter is connected in coincidence with the passing counters, and to eliminate particles of lower rest mass it is connected in anti-coincidence. The discrimination can be made more critical by calibrating c_1 at an efficiency higher than 90% and c_2 at an efficiency less than 10%. For computation, the following form of the relation is convenient:

$$T_1 = (\gamma_1 - 1)\, m_1 = \left\{ \left[\frac{m_1^{\,2}}{m_2^{\,2} - m_1^{\,2}} \left(\frac{c_1 - c_2}{1 - c_1} \right) \right]^{-\frac{1}{2}} - 1 \right\} m_1 , \qquad (5)$$

where T_1 is the laboratory kinetic energy of the lighter particle. By the use of this equation, the following table (Table III) of maximum separation energies for various pairs of particles was computed for our counter.

Table III

Maximum energy for separation of particle pairs				
Particle pairs	μ-π	π-K	π-p	K-p
Maximum energy of lighter particle for separation	2.2 Bev	12 Bev	23 Bev	19 Bev

This calculation does not allow for a momentum spread of the incoming beam. However, it is apparent that the gas Cherenkov counter is a very useful tool for differentiating Bev-energy particles of different rest mass.

Since the slope of the threshold efficiency of the counter determines the discrimination properties of the counter, a detailed study of the sources of this slope was made. The variation of index of refraction of the gas with wavelength over the spectral sensitivity of the phototube accounts for less than 30% of the observed slope. The remainder of the slope is essentially due to statistical fluctuations in the small number of photons produced, collected, and converted to photoelectrons in the counter. A detailed statistical analysis indicates that the most important of these processes are: (a) the small number of photons produced (less than 300), (b) the variable number of reflections made by photons depending on their point of origin, and the statistical nature of the microscopic reflection process for individual photons, and (c) the statistical nature of the limited (20%) photocathode conversion efficiency. Consideration of the effect of a fixed voltage discrimination level (illustrated in Fig. 7) indicates that the slope is directly proportional to the gain of the phototube, since the statistical fluctuations in output pulse height about the mean correspond to smaller changes in $n\beta$ for higher gains. Thus to improve the discrimination characteristics of the counter, the following changes are suggested: (a) make the radiator longer to increase the mean number of photons produced, (b) make the radiator diameter larger and all reflecting surfaces as efficient as possible to minimize reflection statistical effects, and (c) use a phototube with the highest photocathode efficiency and highest gain (with tolerable noise levels) available.

VI. ACKNOWLEDGMENTS

We would like to thank Professors A. Carl Helmholz and Burton J. Moyer for their support of the experimental program for which these counters were designed. The assistance received from Dr. Wilmot N. Hess and Mr. Julius Solomon, in running the calibration experiment and computing the results is greatly appreciated. Mr. Ralph Nobles was responsible for the index-of-refraction measurements. Finally we would like to thank Mr. Fred Kirsten for the phototube calibration and Mr. Richard Perkins for his help in the construction of the counter.

REFERENCES

1. I. Frank and I. Tamm, Compt. Rend. Acad. Sci. U.R.S.S. 14, 109 (1937).
2. J. Marshall, Ann. Rev. Nuc. Sci. 4, 141 (1954).
3. D. Swift, V. Perez-Mendez, Millimicrosecond Discriminator, UCRL-8569, December, 1958.
4. Fred Kirsten, A Generator of Fast-Rising Light Pulses for Phototube Testing, UCRL-8227, March, 1958.
5. Bulletin D-19, Freon Products Division, E.I. Du Pont de Nemours Co. (CCl_2F_2); Technical Bulletin TB-85602, General Chemical Division, Allied Chemical and Dye Corp., 1955 (SF_6).
6. Atkinson, Hess, Perez-Mendez, and Wallace, Bull. Am. Phys. Soc., Ser. II, 3, 189 (1958); ibid., 3, 403 (1958); ibid., 4, 253 (1959); and idem, Phys. Rev. Lett. 2, 168 (1959).

LEGENDS

Fig. 1. Cross-sectional view of gas Cherenkov counter.

Fig. 2. Experimental arrangement for threshold measurements at the Bevatron.

Fig. 3. Block diagram of electronics.

Fig. 4. Measured detection efficiency of SF_6 Cherenkov counter vs gas pressure for 3-Bev pions. The three curves correspond to different voltages on the photomultiplier tube.

Fig. 5. Corrected efficiency vs pressure curves. The electron background has been subtracted out, and the threshold slopes have been corrected for the energy spread of the pion beam.

Fig. 6. Measured current gain vs voltage for the RCA C7232A photomultiplier tube used in the Cherenkov counter.

Fig. 7. Output voltage of phototube $V_g = Ag \left[1 - (1/n^2\beta^2)\right]$ vs $n\beta$. The horizontal line corresponds to an output voltage of 2 v for a detection efficiency of 90%.

Fig. 8. Index of refraction n of sulphur hexafluoride vs gas density as determined by interferometer measurements and from the Lorentz-Lorenz law. The measurements were made at a wavelength λ of 5400 A.

Fig. 9. The index of refraction n of CCl_2F_2 (Freon 12) vs gas density as determined by interferometry measurements and from the Lorentz-Lorenz law. The measurements were made at a wavelength $\lambda = 5400$ A.

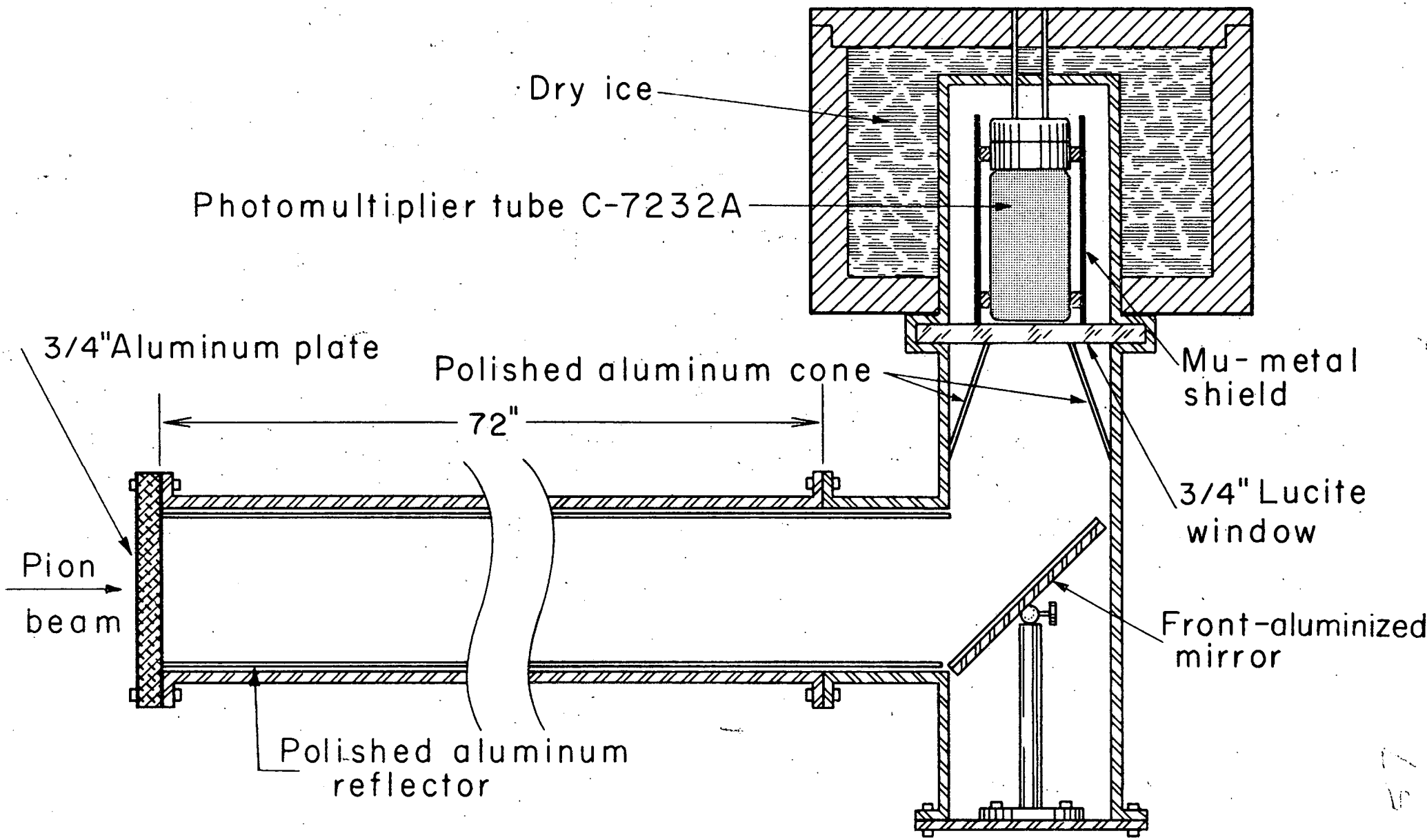
Dry ice
Photomultiplier tube C-7232A
3/4"Aluminum plate
Polished aluminum cone
72"
Mu-metal shield
3/4" Lucite window
Pion beam
Front-aluminized mirror
Polished aluminum reflector

Fig. 1

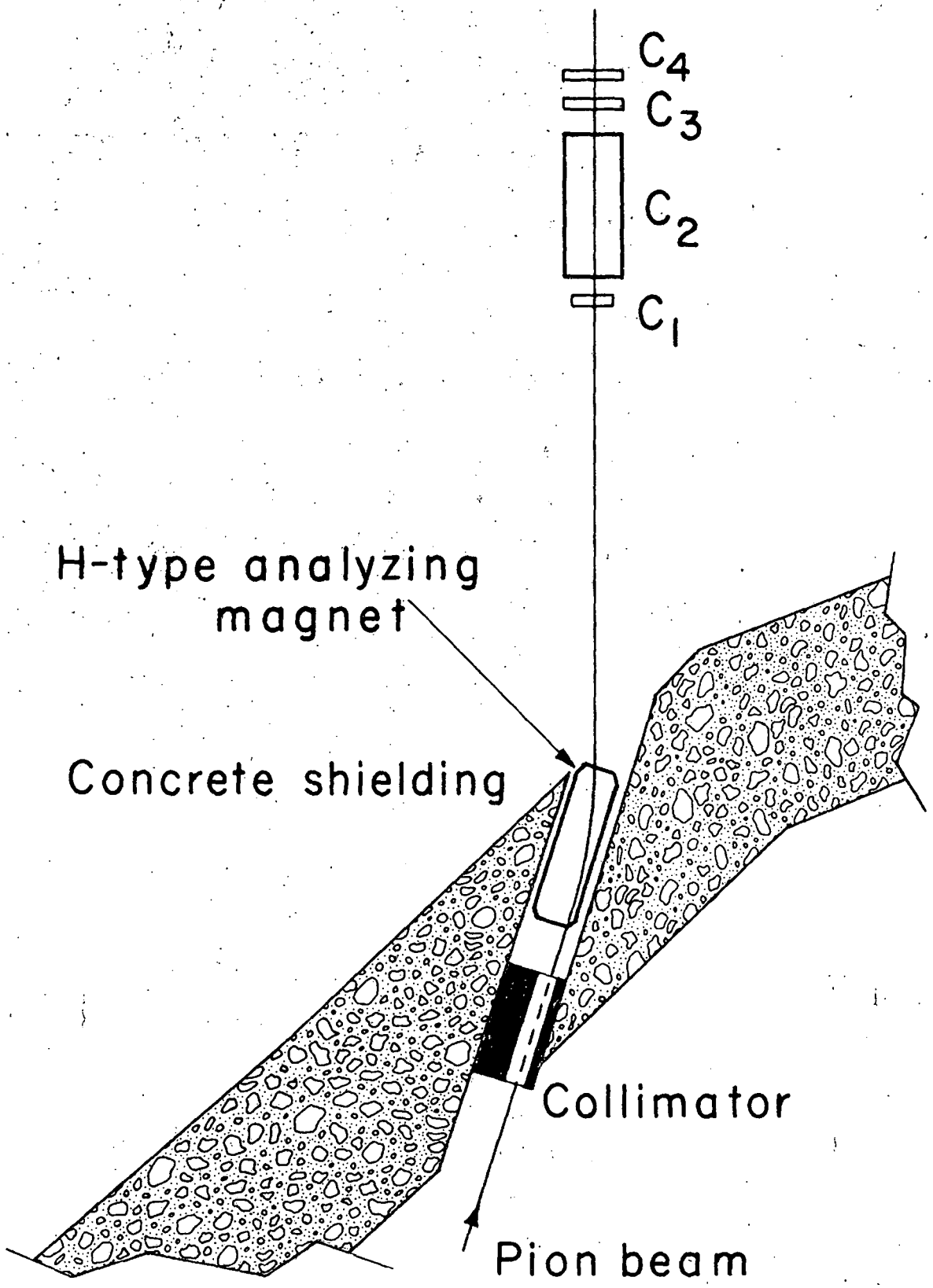

MU-16408

61

62

Fig. 2

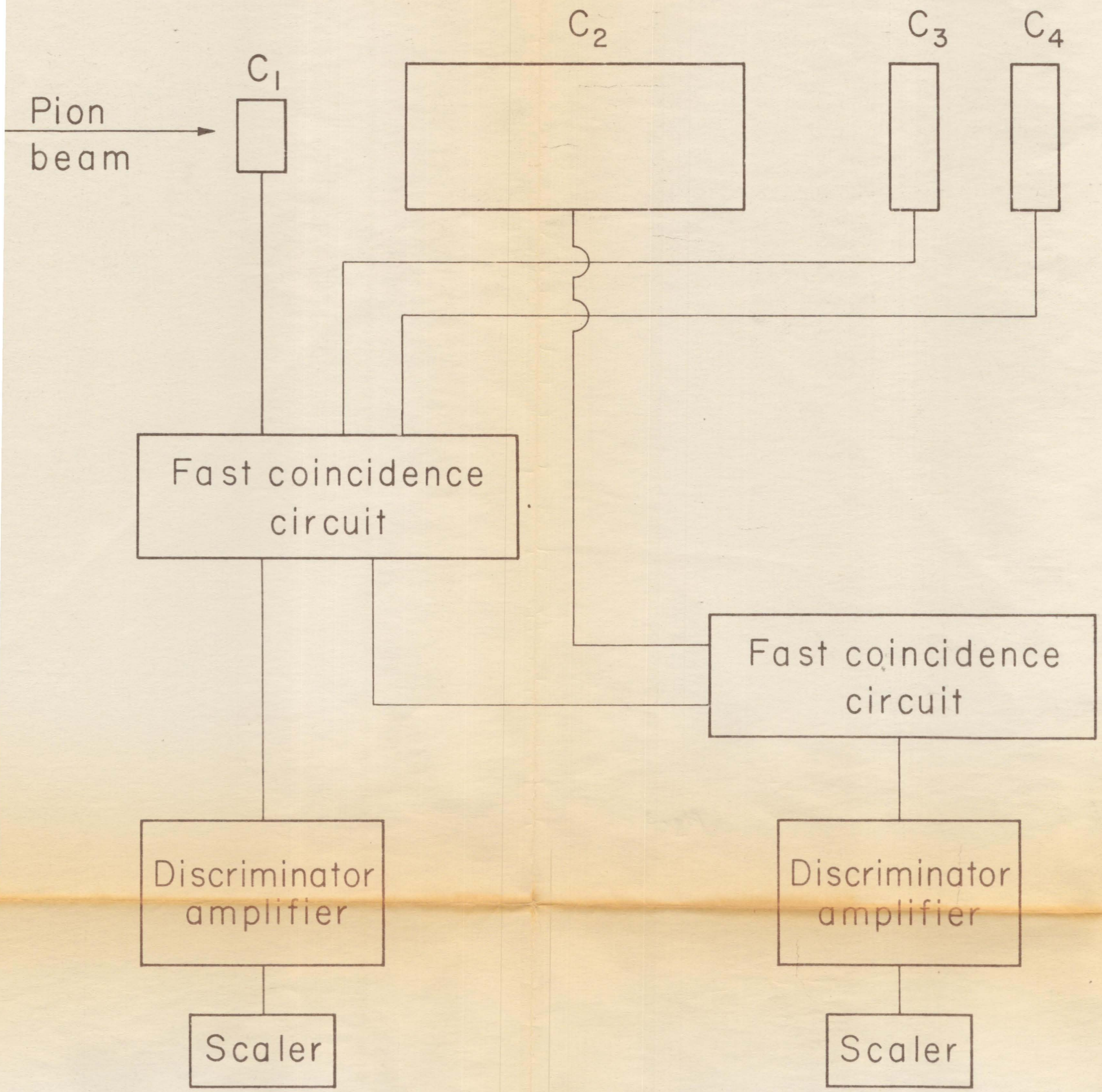
C2
C3
C4
C1
Pion
beam
Fast coincidence
circuit
Fast coincidence
circuit
Discriminator
amplifier
Discriminator
amplifier
Scaler
Scaler

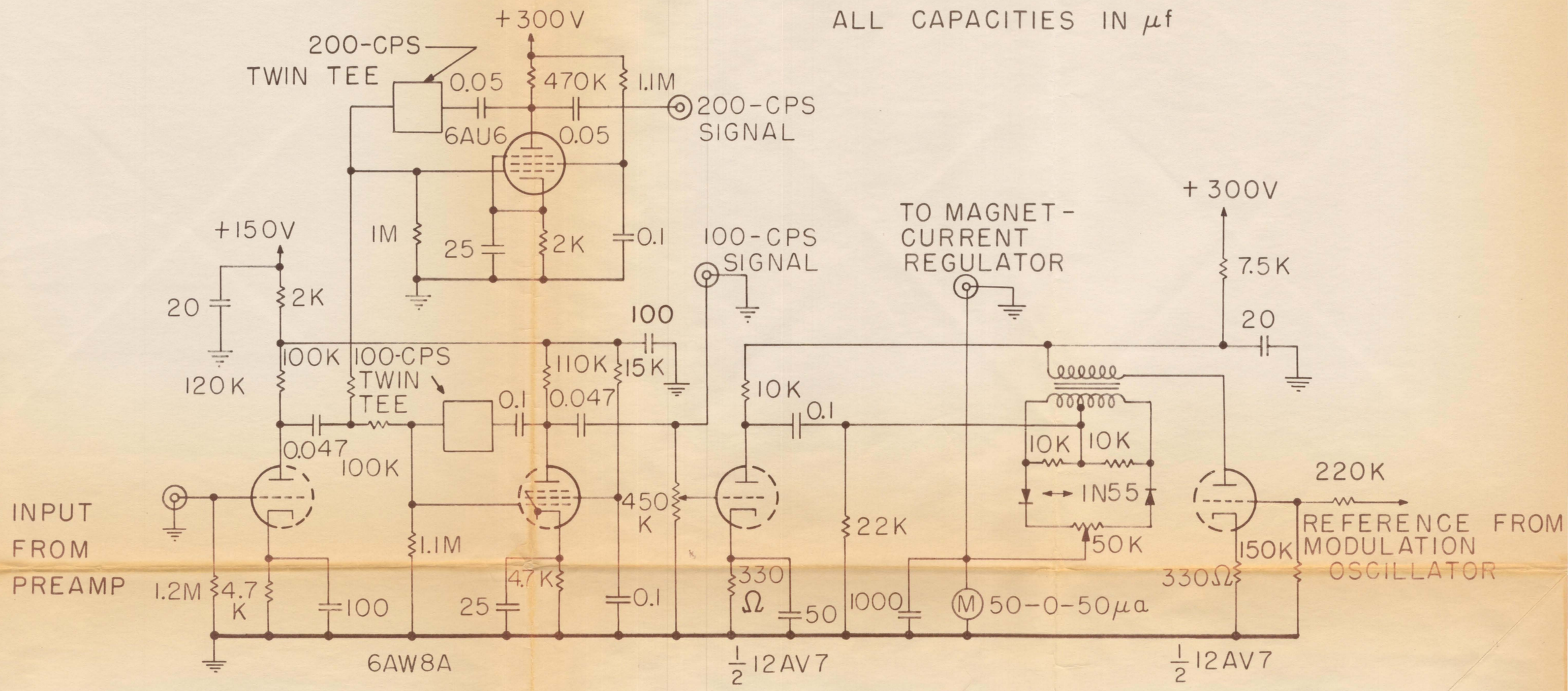
ALL CAPACITIES IN μf
+300V
200-CPS TWIN TEE
0.05
470K
1.1M
200-CPS SIGNAL
6AU6
0.05
+150V
1M
25
2K
0.1
100-CPS SIGNAL
TO MAGNET-CURRENT REGULATOR
+300V
7.5K
20
2K
20
100
120K
100K
100-CPS TWIN TEE
110K
15K
0.1
0.047
10K
0.1
20
0.047
100K
10K
10K
IN55
50K
220K
INPUT FROM PREAMP
1.1M
450 K
22K
150K
REFERENCE FROM MODULATION OSCILLATOR
1.2M
4.7 K
100
25
4.7K
0.1
330 Ω
50
1000
M 50-0-50μa
330Ω
6AW8A
½ 12AV7
½ 12AV7

Fig 6
55,117-3

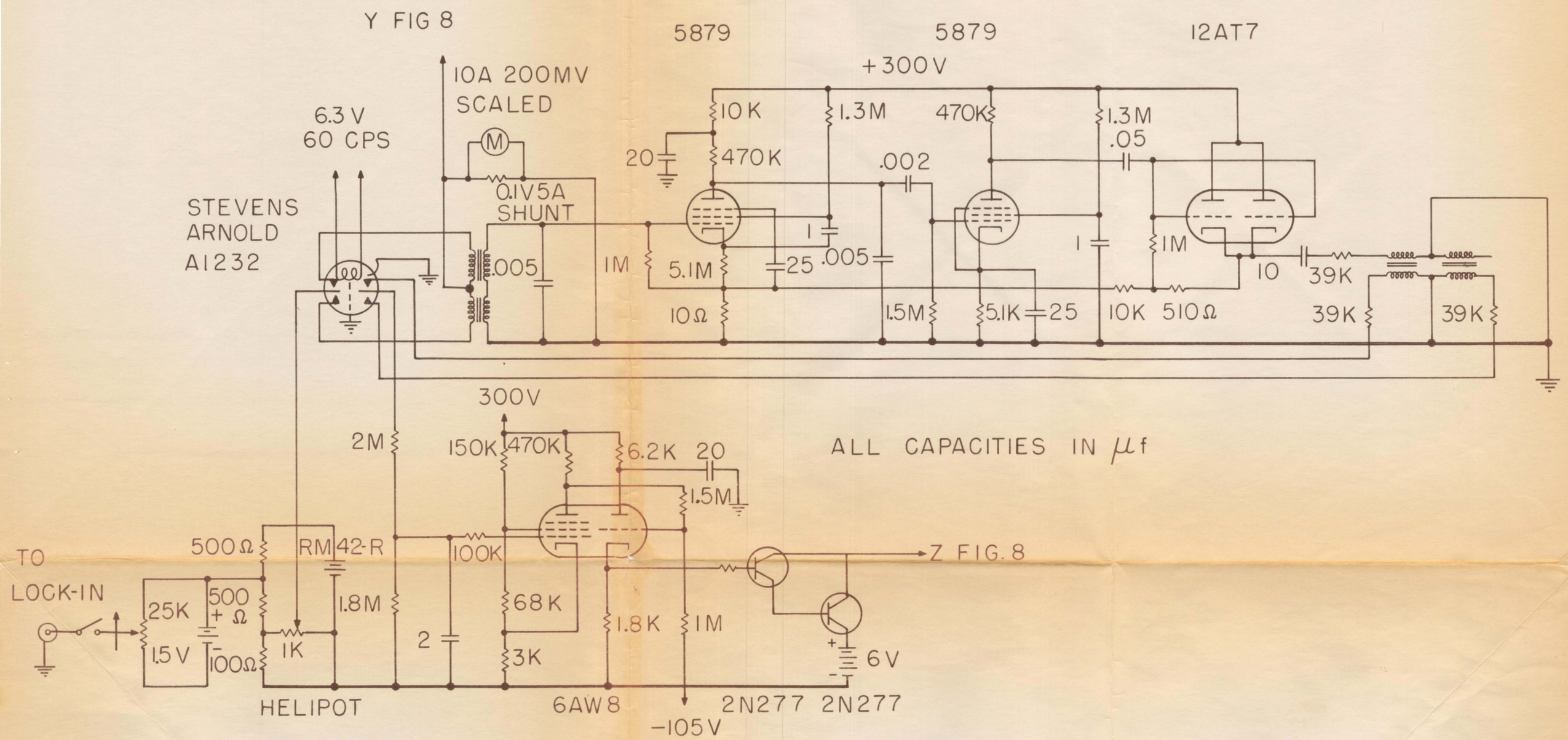
Y FIG 8
5879
5879
12AT7
+300V
10A 200MV
SCALED
6.3 V
60 CPS
M
0.1V5A
SHUNT
STEVENS
ARNOLD
A1232
.005
10K
1.3M
470K
1.3M
.05
20
470K
.002
1
.005
1
1M
1M
5.1M
25
10
39K
10Ω
1.5M
5.1K
25
10K
510Ω
39K
39K
300V
2M
150K
470K
6.2K
20
1.5M
ALL CAPACITIES IN μf
TO
LOCK-IN
500Ω
RM42-R
100K
Z FIG. 8
25K
500
+ Ω
1.8M
68K
1.5 V
100Ω
1K
2
1.8K
1M
3K
6V
HELIPOT
6AW8
2N277
2N277
-105V

FIG 1
55,116-3

BOX 55

UCRL 8570 Rev

1DRWG

fig 3

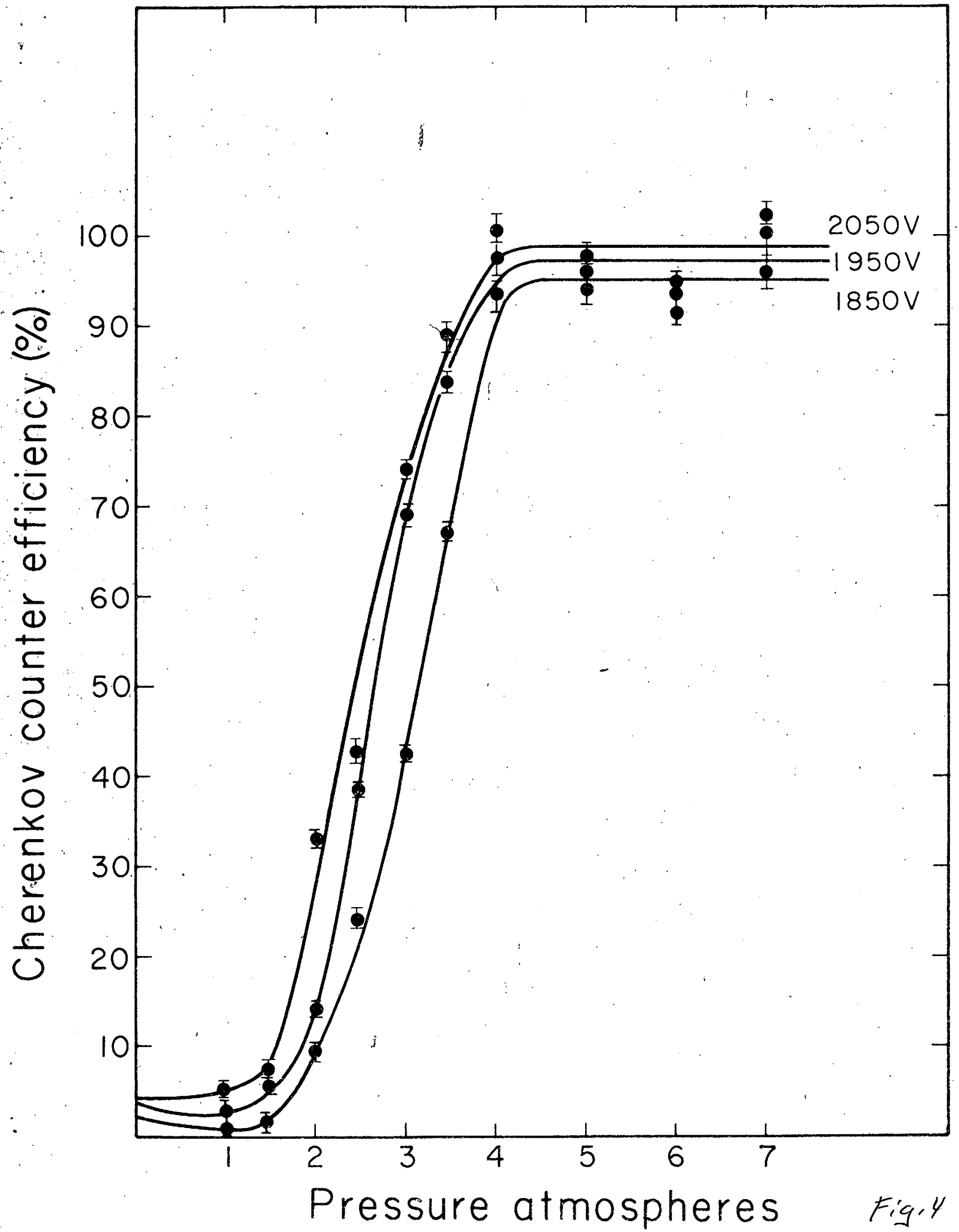
Cherenkov counter efficiency (%)
100
90
80
70
60
50
40
30
20
10
2050V
1950V
1850V
1
2
3
4
5
6
7
Pressure atmospheres

Fig. 4

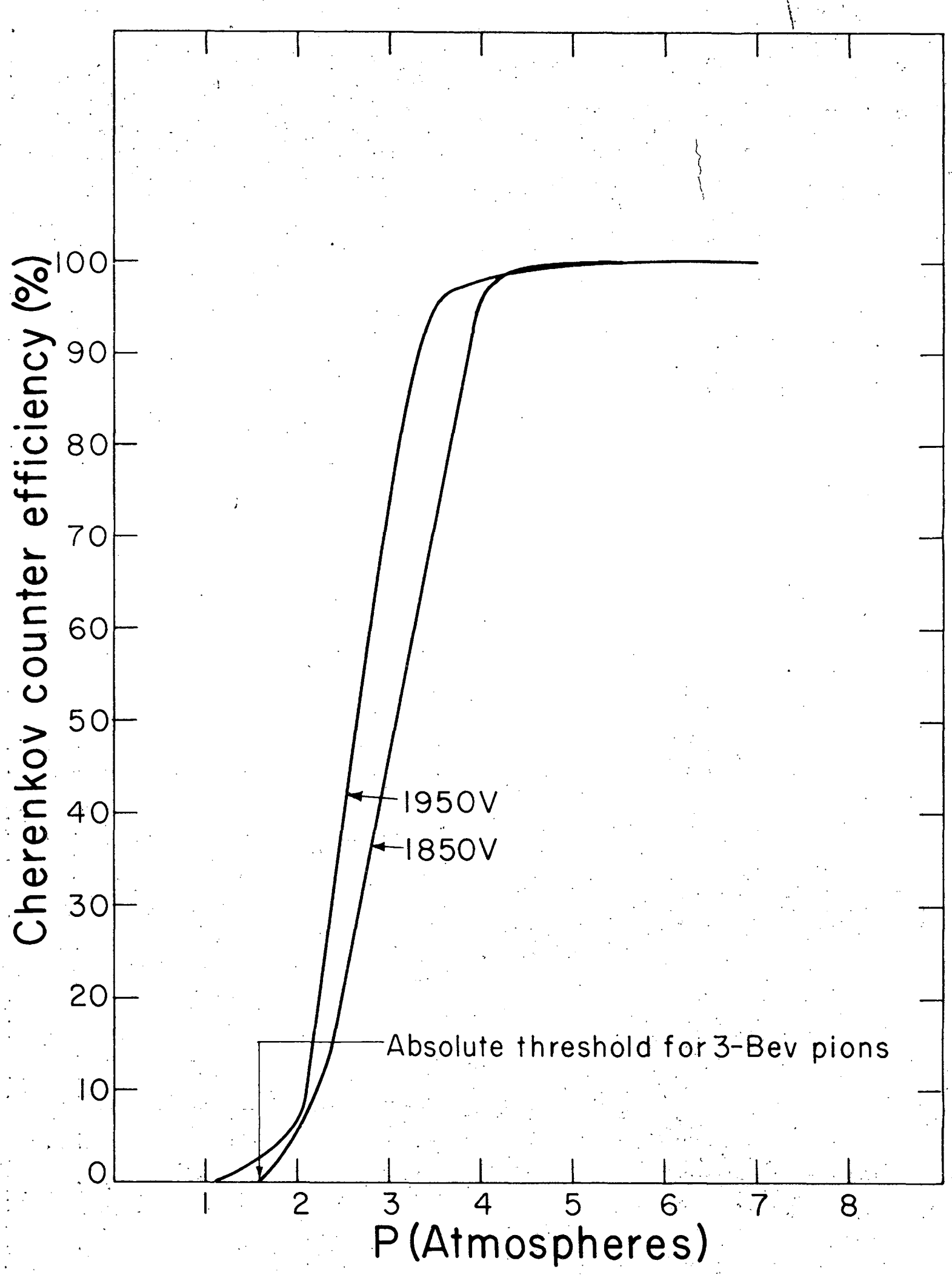

Fig. 5

51437-2 REV.

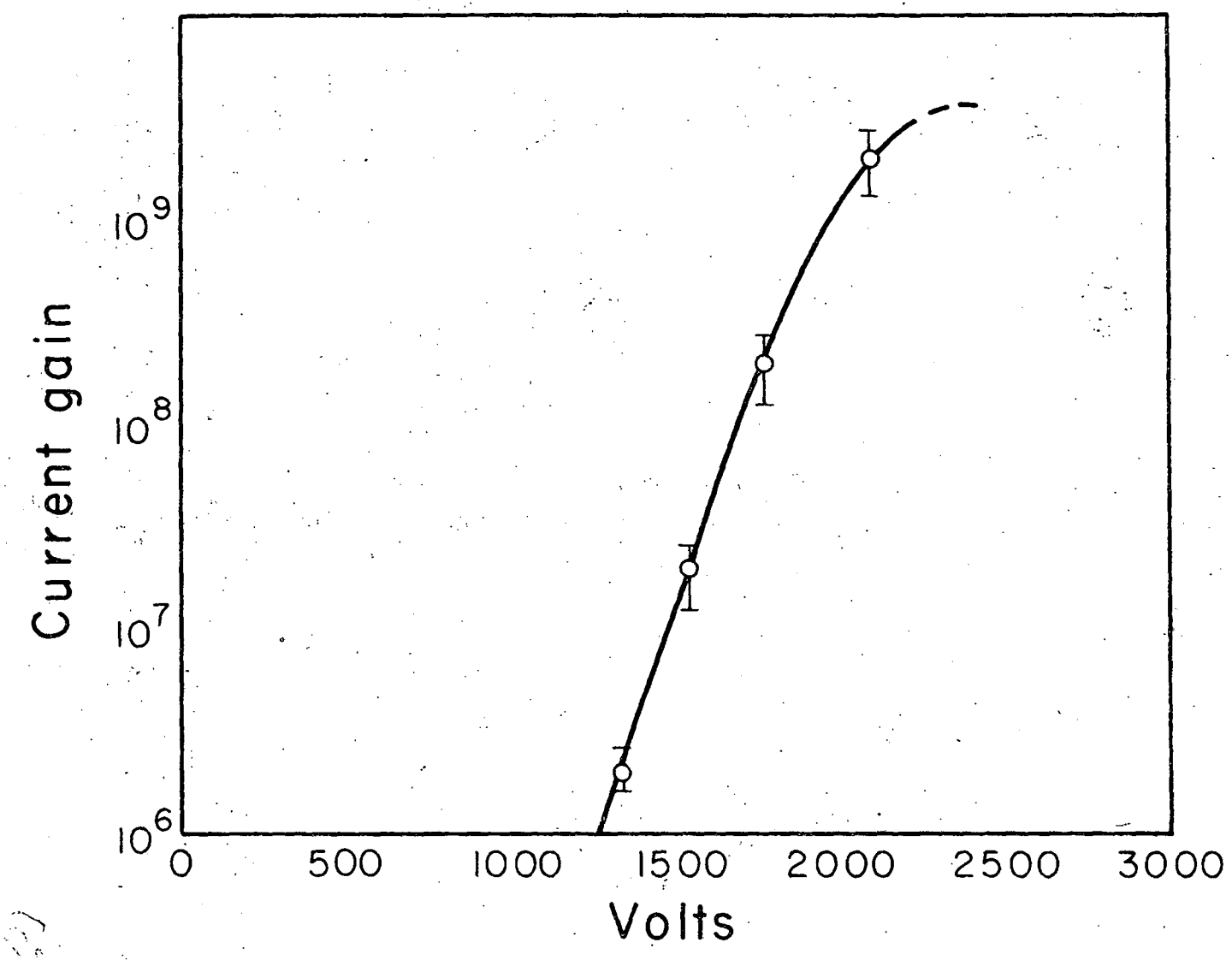
Current gain
10^9
10^8
10^7
10^6
0
500
1000
1500
2000
2500
3000
Volts

Fig. 6

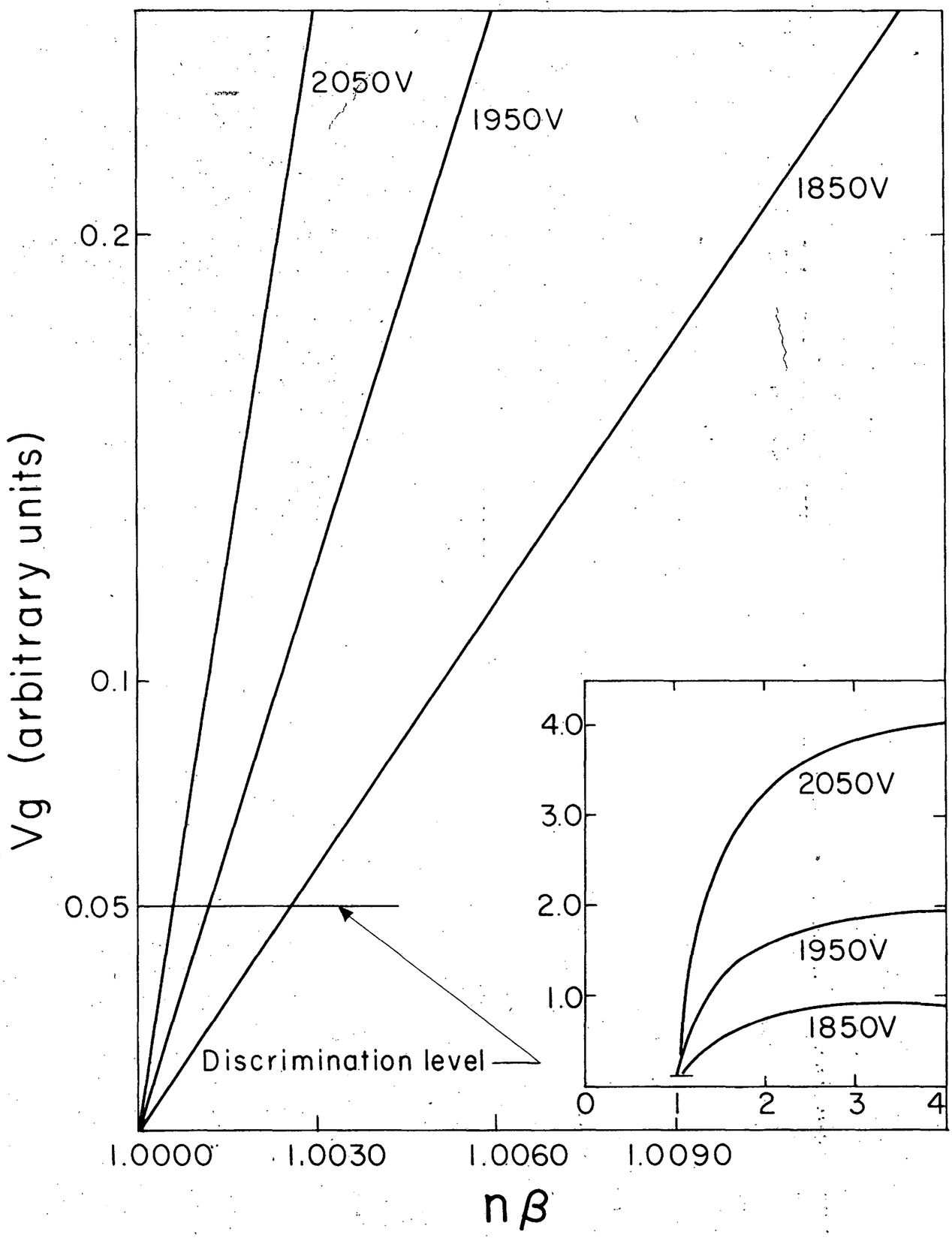

51435-2
REV

Fig. 7

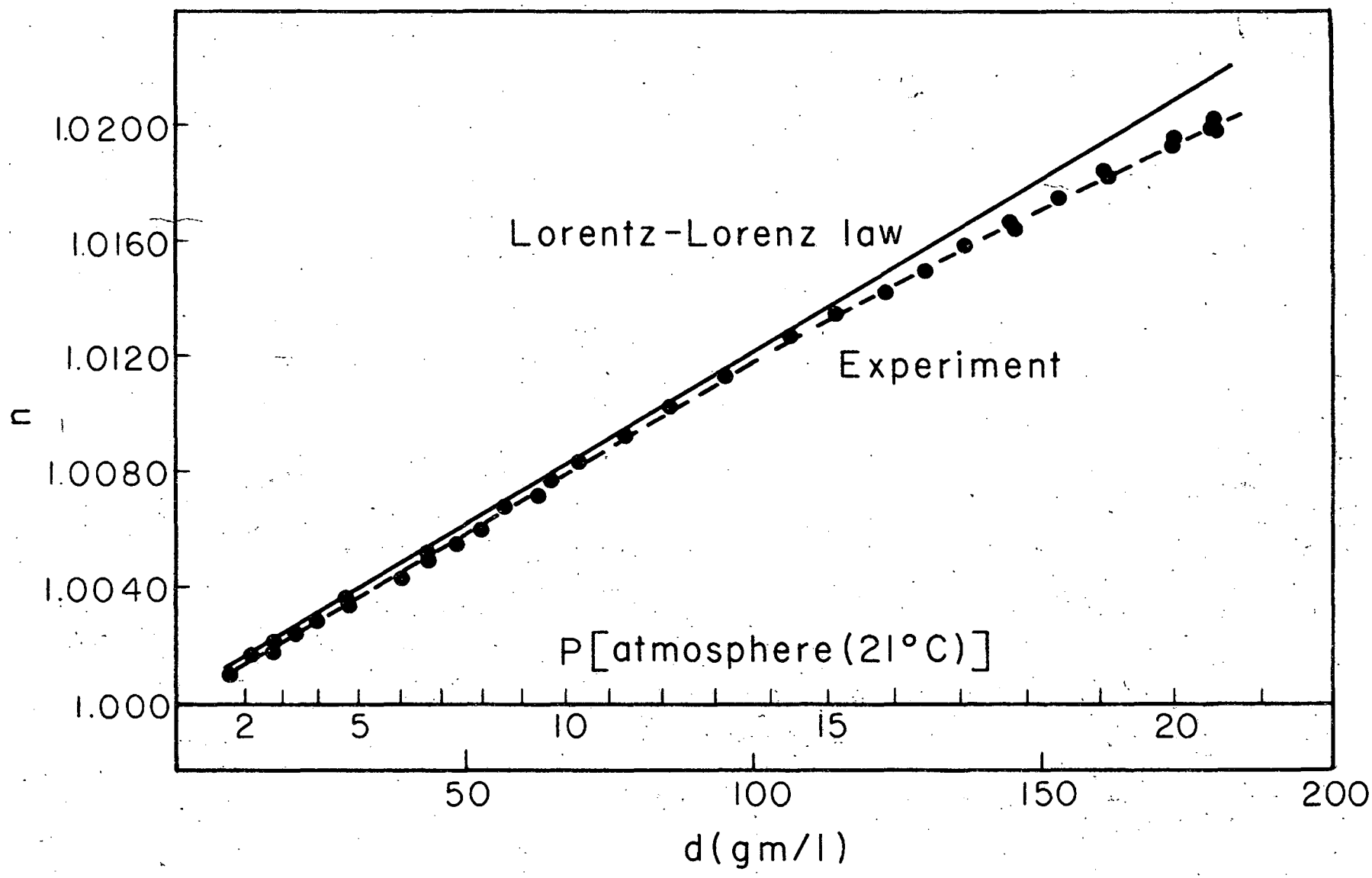
1.0200
1.0160
1.0120
1.0080
1.0040
1.000
n
Lorentz-Lorenz law
Experiment
P[atmosphere(21°C)]
2
5
10
15
20
50
100
150
200
d(gm/l)

Fig. 8

51473-1

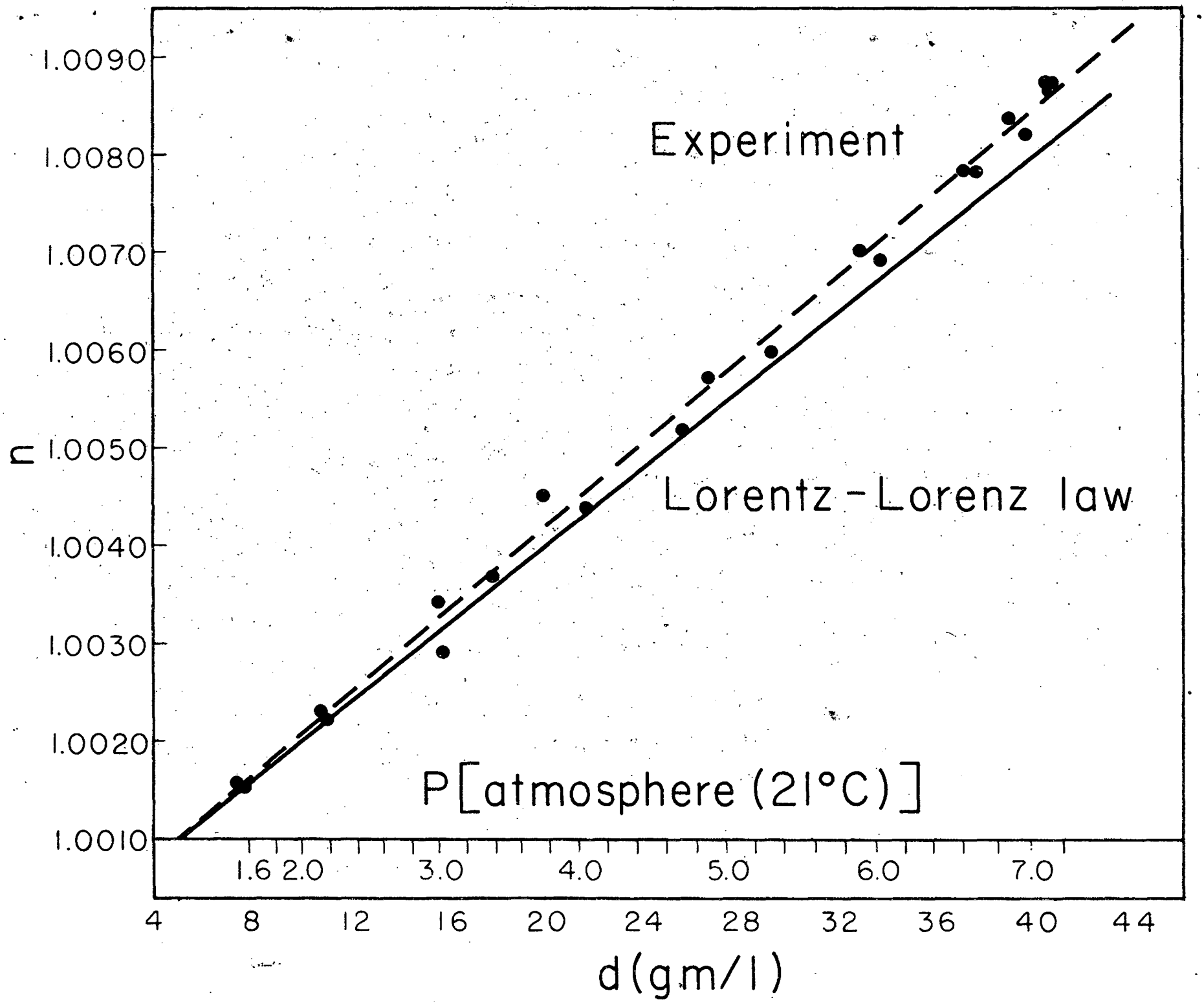
Experiment
Lorentz-Lorenz law
P[atmosphere (21°C)]
n
1.0090
1.0080
1.0070
1.0060
1.0050
1.0040
1.0030
1.0020
1.0010
1.6 2.0 3.0 4.0 5.0 6.0 7.0
4 8 12 16 20 24 28 32 36 40 44
d(gm/l)

Fig. 9