UCRL-8583

Cy.2

University of California

Ernest O. Lawrence Radiation Laboratory

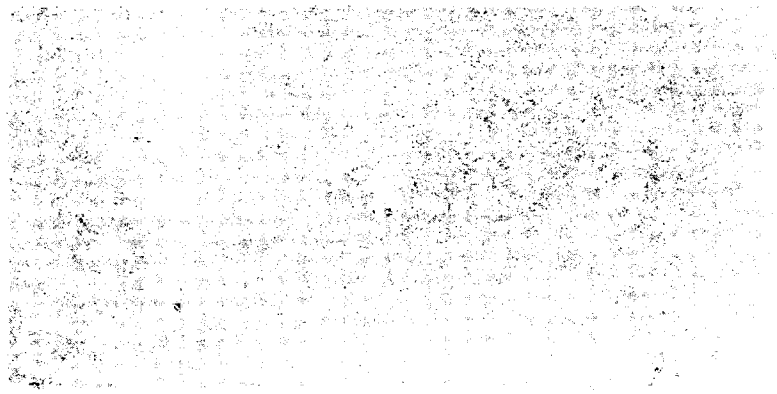

Berkeley, California

DISCLAIMER

This document was prepared as an account of work sponsored by the United States Government. While this document is believed to contain correct information, neither the United States Government nor any agency thereof, nor the Regents of the University of California, nor any of their employees, makes any warranty, express or implied, or assumes any legal responsibility for the accuracy, completeness, or usefulness of any information, apparatus, product, or process disclosed, or represents that its use would not infringe privately owned rights. Reference herein to any specific commercial product, process, or service by its trade name, trademark, manufacturer, or otherwise, does not necessarily constitute or imply its endorsement, recommendation, or favoring by the United States Government or any agency thereof, or the Regents of the University of California. The views and opinions of authors expressed herein do not necessarily state or reflect those of the United States Government or any agency thereof or the Regents of the University of California.

UCRL-8583

UNIVERSITY OF CALIFORNIA

Lawrence Radiation Laboratory
Berkeley, California

Contract No. W-7405-eng-48

LINKED-DIAGRAM EXPANSIONS FOR QUANTUM STATISTICAL MECHANICS

A. E. Glassgold, Warren Heckrotte, and Kenneth M. Watson

December 29, 1958

Printed for the U. S. Atomic Energy Commission

LINKED-DIAGRAM EXPANSIONS FOR QUANTUM STATISTICAL MECHANICS*

A. E. Glassgold, Warren Heckrotte, and Kenneth M. Watson

Lawrence Radiation Laboratory
University of California, Berkeley, California

December 29, 1958

ABSTRACT

A general method of calculation is described for quantum statistical mechanics. It is based on a simplification of the Laplace transform of the density matrix which follows from a theorem due to Hugenholtz. The basic result is that an element of the density matrix can be written as a sum over graphs, with the contribution of each graph factored into contributions from connected or linked graphs. Applied to the grand partition function, the exponential formula of Bloch and deDominicis is obtained in a simple way. A similar formula is then derived for the canonical ensemble and the case of a nondegenerate gas. In this way the familiar result of Uhlenbeck and Beth is obtained for the second virial coefficient. Techniques are also introduced for evaluating ensemble averages of operators. In this connection, some care must be exercised in the case of diagonal operators. Finally, these methods are used to calculate the pair-correlation function for a system of fermions interacting through short-range forces.

---

* Work done under the auspices of the U.S. Atomic Energy Commission.

LINKED-DIAGRAM EXPANSIONS FOR QUANTUM STATISTICAL MECHANICS

A. E. Glassgold, Warren Heckrotte, and Kenneth M. Watson

Lawrence Radiation Laboratory
University of California, Berkeley, California

December 29, 1958

I. INTRODUCTION

This paper describes a general method of calculation for the quantum statistical mechanics of a system of interacting particles. It is based on a theorem due to Hugenholtz,[1] which allows simplification of the Laplace transform of the density matrix.[2] From this we derive a cluster expansion for the density matrix, and give several applications of the result.

Brueckner has called attention to the fact that perturbation methods for many-body systems involve formal complications not present in the conventional perturbation methods.[3] The source of these difficulties is the possibility--for extended systems--that many particles interact simultaneously. Thus a straightforward expansion in powers of the interaction energy and the retention of only low powers is not expected to yield a good description of a many-particle system. On the other hand, different groups of the simultaneously interacting particles act independently in the sense that particles in one group do not interact with those of another. Thus the wave function may be factored into terms referring to independent clusters of interacting particles. Brueckner introduced the term "linked clusters" to describe such factors.

The same difficulty also arises in statistical mechanics when expansions in powers of the interaction energy are attempted. For classical statistical mechanics, a systematic expansion applicable to gases has been presented by Ursell and Mayer.[4-6] Recently a number of new methods have been proposed for studying the equation of state of quantum-mechanical systems. Some of these procedures

are adaptations of techniques that have proved useful in quantum field theory and nuclear physics. For example, there is the recent work of Lee and Yang[7] which uses a generalized pseudopotential for hard-sphere gases. Matsubara has given an extensive field-theoretic exposition of the grand partition function[8,9] which makes use of time-dependent perturbation theory and Wick's theorem.[10] Bloch and deDominicis have extended this work in several recent papers.[11-12] In particular, they have solved the difficulty mentioned above and given a linked-cluster expansion for the Gibbs potential. Similar results have been reported by van Hove.[13] Montroll and Ward[14] have also obtained expansions in terms of graphs for use in quantum statistical mechanics.

The methods presented in this paper are related to some of the above work, particularly that of Bloch and deDominicis.[12] In addition to giving a novel and simple development, we have also extended the general results and presented some new applications.

In Section II the theorem of Hugenholtz is reviewed and then used to give the expansion of the density matrix. In Section III this result is used to evaluate the grand partition function, leading to a result similar to that of Bloch and deDominicis.[12] The evaluation of the partition function for the canonical ensemble is then considered in Section IV. Techniques for obtaining the ensemble average of an operator are considered in Section V. In the last section this result is applied to the calculation of the pair correlation function for a system of interacting fermions. It is hoped in a subsequent paper to apply similar methods to the study of nonequilibrium phenomena.

II. EXPANSION OF THE DENSITY MATRIX INTO CLUSTERS

We consider a system of N similar particles, each of mass M, in interaction within a large volume $\mathcal{V}$. The Hamiltonian describing their motion is

$$H = K + V \quad . \tag{2.1}$$

In this expression K is the kinetic energy:

$$K = \sum_k \epsilon_k a_k^\dagger a_k \quad , \qquad \epsilon_k = k^2 2M \quad . \tag{2.2}$$

The quantities $a_k^\dagger$ and a_k are, respectively, creation and annihilation operators satisfying the usual commutation relations

$$\begin{aligned} [a_k, a_{k'}^\dagger]_\pm &= \delta_{k,k'} \\ [a_k, a_{k'}]_\pm &= [a_k^\dagger, a_{k'}^\dagger]_\pm = 0 \quad . \end{aligned} \tag{2.3}$$

The $+$ sign refers to Fermi-Dirac statistics, while the $-$ sign refers to Bose-Einstein statistics. The quantity $\underset{\sim}{k}$ represents the momentum of a single free particle ($\hbar = 1$); when used as the label of a state or an operator, the label k represents the momentum of a single free particle ($\hbar = 1$) and its spin (if any).

The interaction energy V is

$$V = \frac{1}{4} \sum_{k_1,k_2,k_1',k_2'} (k_1' k_2' \mid v \mid k_1 k_2) a_{k_1'}^\dagger a_{k_2'}^\dagger a_{k_2} a_{k_1} \quad , \tag{2.4}$$

where

$$(k_1' k_2' \mid v \mid k_1 k_2) = (\chi_{k_1'}(x_1) \chi_{k_2'}(x_2), \; v(x_1 - x_2) \chi_{k_1}(x_1) \chi_{k_2}(x_2))$$

$$\mp (\chi_{k_1'}(x_1) \chi_{k_2'}(x_2), \; v(x_1 - x_2) \chi_{k_1}(x_2) \chi_{k_2}(x_1)) \quad . \tag{2.5}$$

The quantity $v(r)$ is the potential energy of two particles separated by a distance r; it may also include spin interactions. The wave functions χ are

$$\chi_k(x) = \mathcal{V}^{-1/2} \quad e^{i\underset{\sim}{k}\cdot\underset{\sim}{x}} \; S \quad , \tag{2.6}$$

where S is a spin function if the particles have spin. Finally, the $-$ or $+$ sign refers to Fermi-Dirac or Bose-Einstein statistics, respectively.

We shall often use a momentum representation for the entire system. Thus the ket $| p \rangle$ specifies the momenta of the N particles; of course it also is an eigenstate of the kinetic energy operator:

$$K \mid p \rangle = E_p \mid p \rangle \quad . \tag{2.7}$$

Here E_p is the eigenvalue of the kinetic energy for the state $| p \rangle$.

The equilibrium properties of the N particle system are completely described in terms of the operator $e^{-\beta H}$, where β^{-1} is the temperature times the Boltzmann constant. It is useful to introduce the Laplace transform of this operator,[2]

$$e^{-\beta H} = \frac{1}{2\pi i} \int_{\mathcal{C}} dE \; e^{-\beta E} \; W(E) \; , \tag{2.8}$$

where

$$W(E) = \frac{1}{E - H} \quad . \tag{2.9}$$

Here E is a complex number, and the contour of integration $\mathcal{C}$ is illustrated in Fig. 1. First one integrates parallel to and above the real axis from $+\infty$ to a point to the left of the lowest eigenvalue of H. At this point the contour crosses the real axis and returns to $+\infty$ below the real axis.

We now consider the expansion of the operator $W(E)$ in powers of V. A typical term in the expansion has matrix elements

$$\langle p' \mid \frac{1}{E - K} V \frac{1}{E - K} V \frac{1}{E - K} \cdots V \frac{1}{E - K} \mid p \rangle \quad . \tag{2.10}$$

For the terms in this expansion we use the graphical representation of Hugenholtz.[1] A typical matrix element of V may be represented by two directed lines, crossing at a point, as in Fig. 2a. Definite states are associated with the two lines, both before and after the scattering. We shall refer to this as a simple "scattering" graph. A typical term in an expansion such as Eq. (2.10) is then represented by a combination of the single-scattering graphs of Fig. 2a. For example, we represent the term

$$\frac{1}{E - \epsilon_{k_1''} - \epsilon_{k_2''}} (k_1'' \, k_2'' \mid v \mid k_1' \, k_2') \frac{1}{E - \epsilon_{k_1'} - \epsilon_{k_2'}} (k_1' \, k_2' \mid v \mid k_1 k_2) \frac{1}{E - \epsilon_{k_1} - \epsilon_{k_2}} \tag{2.11}$$

by the graph of Fig. 2b. A graph, every part of which is connected to every other part by lines, is said to be a "connected" graph. The graphs of expansions, such as (2.10), <u>need not be connected</u>. This is illustrated in Fig. 2c. Graphs that are not connected are called "disconnected."

If a graph contains "disconnected parts," a theorem due to Hugenholtz[1] permits us to "factor" this graph into parts each containing only "connected graphs." This procedure is the cornerstone of our method.

The validity of this factorization may be understood as follows. Let a typical term (2.10) contain a particular connected graph G_2 and any number of other graphs (in general disconnected) which we shall call G_1. The contribution of all these graphs to W, summed over all permutations of the order in which the interactions of G_1 and G_2 occur, is indicated by

$$W_{G_1 G_2}(E) = \langle p' \mid \frac{1}{E - K - V_1 - V_2} \mid p \rangle_{G_1 G_2} . \tag{2.12}$$

Here the subscript (G_1, G_2) means that we pick out of the expansion of

$(E - K - V_1 - V_2)^{-1}$ only those terms which give the required graphs. For the graph G_1 alone, or G_2 alone, we have the corresponding expressions,

$$W_{G_1}(E) = \langle p_1' | \frac{1}{E - K - V_1} | p \rangle_{G_1}$$
$$W_{G_2}(E) = \langle p_2' | \frac{1}{E - K - V_2} | p \rangle_{G_2} . \tag{2.13}$$

Here $| p_1' \rangle$ and $| p_2' \rangle$ represent the states obtained from $| p \rangle$ by the transitions of graphs G_1 and G_2, respectively. Likewise the interaction terms V_1 and V_2 represent the particular terms in V that are required for the transitionsin G_1 and G_2, respectively.

The graphs in this discussion, i.e., those in Eqs. (2.12) and (2.13), involve a specific set of intermediate states.[15] The sum over these virtual states will be carried out at a later stage of the calculation. Now for a <u>large</u> interaction volume V, the interactions associated with the two parts of the graph, i.e., V_1 and V_2, may be considered to refer to different states. It is true, of course, that the sum over intermediate states occasionally gives terms in which the same states are involved. However, these cases are less important by a factor $\mathcal{V}^{-1}$, assumed to be very small.

Thus we are justified in treating the interactions V_1 and V_2 as referring to different states. We can next introduce a kinetic energy operator K_2 which refers only to the states occurring in the connected graph G_2, and also define the operator $K_1 \equiv K - K_2$. Because the two graphs commute, a direct application of Cauchy's theorem gives

$$\frac{1}{E - K - V_1 - V_2} = \frac{1}{2\pi i} \int d\zeta \; \frac{1}{E - \zeta - K_1 - V_1} \; \frac{1}{\zeta - K_2 - V_2} . \tag{2.14}$$

The contour of integration is similar to that of Fig. 1, except that it is sufficiently close to the real axis that no singularities of $(E - \zeta - K_1 - V_1)^{-1}$ are enclosed within the ζ contour. More specifically, we may choose a representation in which $(K_1 + V_1)$ and $(K_2 + V_2)$ are both diagonal with eigenvalues Δ_1 and Δ_2. Then (2.14) obviously holds in the form:

$$\frac{1}{E - \Delta_1 - \Delta_2} = \frac{1}{2\pi i} \int d\zeta \, \frac{1}{E - \zeta - \Delta_1} \, \frac{1}{\zeta - \Delta_2} \, .$$

By forming the matrix elements of Eq. (2.14) appropriate to the graphs G_1 and G_2 we obtain immediately[16]

$$W_{G_1G_2}(E) = \frac{1}{2\pi i} \int d\zeta \, \langle p_1' | \frac{1}{E - \zeta - K_1 - V_1} | p \rangle \langle p_2' | \frac{1}{\zeta - K_2 - V_2} | p \rangle \, . \tag{2.15}$$

We simplify this relation by introducing the notation

$$K_1 | p \rangle = E_{p_1} | p \rangle , \qquad K_2 | p \rangle = E_{p_2} | p \rangle ,$$

$$K | p \rangle = (E_{p_1} + E_{p_2}) | p \rangle = E_p | p \rangle \, .$$

We also define $\zeta = z + E_{p_2}$, and now Eq. (2.15) becomes

$$W_{G_1G_2}(E) = \frac{1}{2\pi i} \int dz \, \langle p_1' | \frac{1}{E - z - K - V_1} | p \rangle \langle p_2' | \frac{1}{z - (K + V_2 - E_p)} | p \rangle \, . \tag{2.16}$$

Equation (2.16) is just the statement of the Hugenholtz theorem.[1] We have developed it in a manner suggested by Hugenholtz[1] and also by Riesenfeld and Watson.[17] A special case of Eq. (2.16) obtains when there is no graph G_1 and V_1 consequently vanishes.

We now use Hugenholtz's theorem (2.16) to reduce $e^{-\beta H}$ to a sum of terms, each containing factors involving only connected graphs. First, let us suppose a typical graph in the expression (2.10) contains L connected graphs, $G_1, G_2, \ldots G_L$. By induction, from Eq. (2.16), we obtain for their contribution to $W(E)$,

$$W_{G_1 G_2}(E) = \frac{1}{2\pi i} \int dz_1 \int dz_2 \ldots \int dz_L \langle p \mid \frac{1}{E - (z_1 + z_2 + \ldots z_L) - K} \mid p \rangle$$

$$\langle p_1' \mid \frac{1}{z_1 - (K + V_1 - E_p)} \mid p \rangle_{G_1} \langle p_2' \mid \frac{1}{z_2 - (K + V_2 - E_p)} \mid p \rangle_{G_2}$$

$$\ldots \langle p_L' \mid \frac{1}{z_L - (K + V_L - E_p)} \mid p \rangle_{G_L} .$$

We next carry out the sum over virtual states in each graph on both sides of this equation and also sum over all graphs to obtain

$$W(E) = \sum_{\text{all graphs}} \frac{1}{(2\pi i)^{L+1}} \int dz_1 \int dz_2 \ldots \int dz_L \langle p \mid \frac{1}{E - (z_1 + z_2 + \ldots z_L) - K} \mid p \rangle$$

$$\times \{ w_1(z_1)\, w_2(z_2) \ldots w_L(z_L) \} , \tag{2.17}$$

where

$$w_i(z_i) = \langle p_i' \mid \frac{1}{z - (K + V - E_p)} \mid p \rangle_{G_i} . \tag{2.18}$$

In $w_i(z_i)$ we include only terms of $[z - (K + V - E_p)]^{-1}$ contributing to G_i, but sum over all virtual states. In Eq. (2.17) the sum over all graphs includes a sum over all topologically different graphs. It also includes a sum for each graph, over the available particle states in the states $\mid p \rangle$ and $\langle p' \mid$.

To obtain $e^{-\beta H}$ it is necessary only to substitute Eq. (2.17) into Eq. (2.8):

$$\langle p' \mid e^{-\beta H} \mid p \rangle = \sum_{\text{all graphs}} \frac{1}{(2\pi i)^{L+1}} \int dE \int dz_1 \int \ldots \int dz_L$$

$$\times \langle p \mid \frac{e^{-\beta E}}{E - (z_1 + z_2 + \ldots z_L) - K} \mid p \rangle \; w_1(z_1)\, w_2(z_2) \ldots w_L(z_L) \; .$$

Then

$$\langle p' \mid e^{-\beta H} \mid p \rangle = \sum_{\text{all graphs}} \langle p \mid \frac{1}{2\pi i} \int dE \; \frac{e^{-\beta[E - (z_1 + z_2 + \ldots z_L)]}}{E - (z_1 + z_2 + \ldots z_L) - K} \mid p \rangle$$

$$\times \frac{1}{2\pi i} \int dz_1 \; e^{-\beta z_1} \; w_1(z_1) \ldots \frac{1}{2\pi i} \int dz_L \; e^{-\beta z_L} \; w_L(z_L) \; .$$

Now define the quantities

$$g_i = \frac{1}{2\pi i} \int dz_i \; e^{-\beta z_i} \; w_i(z_i) \; , \tag{2.19}$$

where i refers to a graph of the ith type, defined by its topological structure.

With these definitions, the above expression reduces to

$$\langle p' \mid e^{-\beta H} \mid p \rangle = \langle p \mid e^{-\beta K} \mid p \rangle \left\{ \sum_{\text{all graphs}} . \, g_1 \, g_2 \ldots g_L \right\} \; . \tag{2.20}$$

This equation represents the fundamental result of this investigation. It achieves the stated goal of reducing the interaction of many particles to a sum of products, each factor describing the interaction of a much smaller number of particles.

Before discussing a number of applications of this result, we discuss Eq. (2.20) in somewhat greater detail. Each factor g_i represents a contribution

to $e^{-\beta H}$ from a single connected graph. We may suppose this graph to involve the scattering of r_i particles. Then g_i is a matrix,

$$(k_{1_i}' \, k_{2_i}' \ldots k_{r_i}' \mid g_i \mid k_{1_i} \, k_{2_i} \ldots k_{r_i}) \, ,$$

leading in general to a change of state for each of the r_i particles. This matrix is

$$(k_{1_i}' \, k_{2_i}' \ldots k_{r_i}' \mid g_i \mid k_{1_i} \, k_{2_i} \ldots k_{r_i}) = \frac{1}{2\pi i} \int dz \; e^{-\beta z} \tag{2.21}$$

$$\times \langle p_i' \mid \frac{1}{z - (K - E_p)} V \frac{1}{z - (K - E_p)} V \ldots V \frac{1}{z - (K - E_p)} \mid p \rangle \, .$$

The last factor may of course be simplified, since $[z - (K - E_p)]^{-1} \mid p \rangle = z^{-1} \mid p \rangle$.

The sum over "all graphs" in Eq. (2.20) implies first a sum over all $(k_{1_i}' \, k_{2_i}' \ldots k_{r_i}' \mid g_i \mid k_{1_i} \, k_{2_i} \ldots k_{r_i})$ for each g_i. In addition to this, we must sum over all topologically different graphs. To clarify notation on this point we use a symbol G to denote the topological structure of a graph. Then a "sum over G" implies only a sum over all topologically different graphs. This kind of summation is then not equivalent to the sum over "all graphs." Only when a sum over all $(k_{1_i}' \, k_{2_i}' \ldots k_{r_i}')$ and all $(k_{1_i} \, k_{2_i} \ldots k_{r_i})$ is also performed is the "sum over all graphs" complete.

III. EVALUATION OF THE GRAND PARTITION FUNCTION

We shall now derive an expression for the grand partition function using the basic result given in Eq. (2.20). This is the same problem solved by Bloch and deDominicis and, indeed, our result is similar to theirs. We shall treat separately the two cases of Fermi-Dirac and Bose-Einstein statistics. The two

discussions are, however, quite similar, as are the final formal expansions in terms of connected graphs.

A. Fermi-Dirac Statistics

The grand partition function is

$$\mathcal{Z} = \mathrm{Tr}[e^{\alpha N} \; e^{-\beta H}] \; , \tag{3.1}$$

where α is the chemical potential. In performance of the trace operation (Tr [...]) a sum is carried out over all number of particles N. The essential simplification of the grand partition function is now accomplished by the use of Eq. (2.20) for the diagonal elements of $e^{-\beta H}$:

$$\mathcal{Z} = \mathrm{Tr}\left[e^{\alpha N} \; e^{-\beta K} \sum_{\text{all graphs}} \{ g_1 \cdots g_L \} \right] . \tag{3.2}$$

For the operators N and K we use the familiar expressions

$$N = \sum_k n_k \; ,$$

$$K = \sum_k \epsilon_k n_k \; ,$$

with $n_k = a_k^\dagger a_k$. For Fermi-Dirac statistics, of course, n_k can only be zero or one.

Only the diagonal elements of $e^{-\beta H}$ are involved in the trace of Eq. (3.1). Then, according to the discussion of the preceding section, only the diagonal matrix elements of the g_i (diagonal graphs) are required in Eq. (3.2). A typical diagonal g then has the form

$$g = \sum_{s_1 s_2 \ldots} a(k_1 \ldots k_r; \; s_1 s_2 \ldots)[(1 - n_{s_1})(1 - n_{s_2}) \ldots][n_{k_1} n_{k_2} \ldots n_{k_r}] \; . \tag{3.3}$$

This expression follows directly from Eq. (2.21) on substitution of the explicit expression, Eq. (2.4), for the interaction V. Between each interaction a sum over intermediate states s_i is introduced, and this gives rise to the sums over intermediate states $s_1 s_2 \ldots$ in Eq. (3.3). The states $k_1 k_2 \ldots$ are the initial states which have been suppressed on the left side of (3.3). The coefficients $a(k_1 k_2 \ldots k_r; s_1 s_2 \ldots)$ involve energy denominators and matrix elements of the potential. Their form is not important for the general discussion of this section.

Equation (3.2) may be written in a more explicit form as

$$\mathcal{Z} = \sum_{n_{\ell_1} n_{\ell_2} \ldots} \; \sum_{\text{all graphs}} \left[\prod_i e^{(\alpha - \beta\epsilon_{k_i}) n_{k_i}} \right] \{ g_1 g_2 \ldots g_L \} \; . \tag{3.4}$$

The summation over $(n_{\ell_1} n_{\ell_2} \ldots)$ means that the occupation number for <u>every</u> state assumes the value zero or one. As a first step in evaluating Eq. (3.4) we insert the appropriate expressions (3.3) for the graphs but, for the moment, do <u>not</u> carry out the sums over intermediate states $s_1, s_2 \ldots$. Instead, we first carry out the sum over the n_ℓ's. To do this, we observe that each factor $\exp[(\alpha - \beta\epsilon_{k_i}) n_{k_i}]$ falls into one of three classes. If the state k_i does not occur in any graph,

$$\sum_{n_{k_i}} e^{(\alpha - \beta\epsilon_{k_i}) n_{k_i}} = [\, 1 + e^{(\alpha - \beta\epsilon_{k_i})} \,] \; .$$

If k_i occurs somewhere as an initial state, it has, according to Eq. (3.3), a factor n_{k_i} . Thus the sum is

$$\sum_{n_{k_i}} e^{(\alpha - \beta\epsilon_{k_i}) n_{k_i}} \, n_{k_i} = e^{(\alpha - \beta\epsilon_{k_i})} \; .$$

For k_i occurring as a virtual state, there is now a factor of $(1 - n_{k_i})$ [again referring to Eq. (3.3)]. In this case, then,

$$\sum_{n_{k_i}} e^{(\alpha - \beta\epsilon_{k_i})n_k} (1 - n_{k_i}) = 1 .$$

Taking account of these results we may extract from Eq. (3.4) for the factor[17]

$$\mathcal{Z}_0 = \prod_i [1 + e^{(\alpha - \beta\epsilon_{k_i})}] . \tag{3.5}$$

Of course corrections have to be made to Eq. (3.5) for states occurring in the graphs. When this has been done it is seen that each summand in (3.3) is replaced by

$$a(k_1 k_2 \ldots k_r; s_1 s_2 \ldots)[f_{s_1}^{(+)} f_{s_2}^{(+)} \ldots][f_{k_1}^{(-)} f_{k_2}^{(-)} \ldots f_{k_r}^{(-)}] , \tag{3.6}$$

where

$$\begin{aligned} f_k^{(+)} &\equiv [1 + e^{(\alpha - \beta\epsilon_k)}]^{-1} , \\ f_k^{(-)} &\equiv [1 + e^{(\beta\epsilon_k - \alpha)}]^{-1} . \end{aligned} \tag{3.7}$$

The factors $f_k^{(-)}$ and $f_k^{(+)}$ are simply the probabilities that state k is occupied or empty for a Fermi gas. Note also that $f_k^{(-)} + f_k^{(+)} = 1$.

Referring to Eq. (3.3) and (2.21) we see that, when the sum over the n_k's is completed, each g_i in Eq. (3.4) is replaced by a quantity

$$C_i(k_1k_2 \ldots k_r) = \frac{1}{2\pi i} \int dz \, \frac{e^{-\beta z}}{z^2}$$

$$\times \langle k_1k_2 \ldots k_r \mid (fV) \frac{1}{z - (K - E_k)} (fV) \ldots (fV) \mid k_1k_2 \ldots k_r \rangle_{G_i} \, . \tag{3.8}$$

Here $E_k = \epsilon_{k_1} + \epsilon_{k_2} + \ldots \epsilon_{k_r}$. The quantity f is an operator acting only on the V to its right; a typical matrix element of fV is

$$(\ell_1\ell_2 \mid fV \mid \ell_1'\ell_2') = f_{\ell_1}^{(\pm)} f_{\ell_2}^{(\pm)} (\ell_1\ell_2 \mid V \mid \ell_1'\ell_2') \, . \tag{3.9}$$

If ℓ_1 (or ℓ_2) is a virtual momentum state, then $f^{(+)}$ (or $f_{\ell_2}^{(+)}$) is chosen. If ℓ_1 (or ℓ_2) is a member of the set $(k_1 \ldots k_{r_i})$ then $f_{\ell_1}^{(-)}$ (or $f_{\ell_2}^{(-)}$) is used. Equation (3.8) provides a formal expression of the content of Eq. (3.6).

To repeat, each intermediate state s in a graph is weighted by a factor $f_s^{(+)}$ (the probability that s is empty), while each initial momentum state k is weighted by $f_k^{(-)}$ (the probability that k is occupied). This feature was obtained previously in the work by Matsubara[8] and by Bloch and deDominicis.[12]

To summarize, we have obtained the following expansion for the grand partition in terms of connected graphs (or linked clusters)

$$\mathcal{Z} = \mathcal{Z}_0 \sum_{\text{all graphs}} \{C_1 \ldots C_L\} \, . \tag{3.10}$$

As described in Section II, the sum over graphs is to be done in two parts. A given graph, defined topologically, must be summed over all states $(k_1k_2 \ldots k_r)$. Then a sum must be made over all topologically different graphs. Define

$$Q_G = \sum_{k_1 \ldots k_r} C_G(k_1 \ldots k_r) \tag{3.11}$$

and let there be N_G graphs of a given type G in a typical term in Eq. (3.10). Now, a given graph G is counted $N_G!$ times in carrying out sums such as those in Eq. (3.11). The reason is that these sums give $N_G!$ terms that correspond to permutations of the C_G's among themselves. This permutation was already carried out once, however, in using Hugenholtz's theorem (2.16). Therefore if a graph G occurs N_G times, its contribution is $Q_G^{N_G}/N_G!$. Finally, the grand partition function is

$$\mathcal{Z} = \mathcal{Z}_0 \sum_{N_G=0}^{\infty} \prod_{\text{different } G} \frac{Q_G^{N_G}}{N_G!} ,$$

which can be written as a simple exponential,

$$\mathcal{Z} = \mathcal{Z}_0 \exp \Big[\sum_{\text{different } G} Q_G \Big] . \tag{3.12}$$

We can also introduce the Gibbs' potential through the equation

$$\mathcal{Z} = \exp(-\beta\, \Omega_0) .$$

It can be simply expressed as a sum of connected diagrams,

$$\Omega_0 = -\beta^{-1} \ln \mathcal{Z}_0 - \beta^{-1} \sum_{\text{different } G} Q_G . \tag{3.13}$$

For convenience, we here rewrite Q_G, defined by Eq. (3.11),

$$Q_G = \sum_{k_1 \ldots k_r} \frac{1}{2\pi i} \int dz \, \frac{1}{z^2} \, e^{-\beta z}$$

$$\times \langle k_1 k_2 \ldots k_r \,|\, fV \frac{1}{z - (K - E_k)} fV \ldots fV \,|\, k_1 \ldots k_r \rangle . \tag{3.14}$$

To illustrate Eq. (3.14), we write out the first two terms (1st and 2nd order in v). Sums are converted to integrals by the usual prescription,

$$\sum_k \rightarrow \left[\frac{\mathcal{V}}{(2\pi)^3} \right] \int d^3k \quad ,$$

$$Q_1 = -\frac{\beta}{2} \left[\frac{\mathcal{V}}{(2\pi)^3} \right]^2 \int d^3k_1 \int d^3k_2 \; \frac{(k_1k_2 \mid v \mid k_1k_2)}{[1 + e^{\beta\epsilon_{k_1} - \alpha}][1 + e^{\beta\epsilon_{k_2} - \alpha}]} \; .$$

$$Q_2 = \frac{1}{4} \left[\frac{\mathcal{V}}{(2\pi)^3} \right]^4 \int d^3k_1 \int d^3k_2 \int d^3g_1 \int d^3g_2 \; (k_1k_2 \mid v \mid g_1g_2)(g_1g_2 \mid v \mid k_1k_2)$$

$$\times \left\{ [1 + e^{\beta\epsilon_{k_1} - \alpha}][1 + e^{\beta\epsilon_{k_2} - \alpha}][1 + e^{\beta\epsilon_{g_1} - \alpha}][1 + e^{\beta\epsilon_{g_2} - \alpha}] \right\}^{-1}$$

$$\times \left\{ \frac{e^{-\beta(\epsilon_{g_1} + \epsilon_{g_2} - \epsilon_{k_1} - \epsilon_{k_2})}}{(\epsilon_{k_1} + \epsilon_{k_2} - \epsilon_{g_1} - \epsilon_{g_2})^2} - \frac{\beta}{(\epsilon_{k_1} + \epsilon_{k_2} - \epsilon_{g_1} - \epsilon_{g_2})} - \frac{1}{(\epsilon_{g_1} + \epsilon_{g_2} - \epsilon_{k_1} - \epsilon_{k_2})^2} \right\} . \tag{3.15}$$

In the limit of zero temperature $(\beta \rightarrow \infty)$; Ω_0 becomes the energy of the lowest state of the system. From Eqs. (3.13) and (3.14) this is

$$\Omega_0 = E_F + \sum_G \sum_{k_1 \ldots k_r < k_F} \langle k_1 \ldots k_r \mid V \frac{1}{E_k - K} V \ldots V \mid k_1 \ldots k_r \rangle_G \; . \tag{3.16}$$

Here E_F is the lowest energy of a gas of noninteracting fermions. All sums over intermediate states are restricted to momenta greater than the Fermi momentum k_F , whereas the initial momenta $k_1 \ldots k_r$ are all less than k_F . As was

noted by Bloch and deDominicis,[12] these restrictions are a direct consequence of the limiting values of the weight factors $f_k^{(\pm)}$ for $\beta \to \infty$. Equation (3.16) is Goldstone's[19] expression for the lowest energy of a system of interacting fermions.

B. Bose-Einstein Systems

We begin our discussion of Bose-Einstein statistics with Eq. (3.4), which is also correct in this case. Now the sums over occupation numbers must go over all positive integral values of the n_k, however. In addition, Eq. (3.3) must be replaced by

$$g = \sum_{s_1 s_2 \cdots} a(k_1 \ldots k_r, s_1 s_2 \ldots)[(n_{s_1} + 1)(n_{s_2} + 1)\ldots][n_{k_1} n_{k_2} \ldots n_{k_r}] . \tag{3.17}$$

We again first sum over the n_k's in Eq. (3.4) before doing the sums over intermediate state $(s_1 s_2 \ldots)$. As before, the factors $\exp(\alpha - \beta\epsilon_k)$ fall into three classes according to whether k occurs later in a graph (as an initial or intermediate state) or not. For a k not appearing in a graph, the sum is

$$\sum_{n_k} e^{(\alpha - \beta\epsilon_k)n_k} = \frac{1}{1 - e^{\alpha - \beta\epsilon_k}} \equiv b_k^{(+)} . \tag{3.18}$$

If k occurs as an initial state, Eq. (3.17) gives

$$\sum_{n_k} e^{(\alpha - \beta\epsilon_k)n_k} n_k = b_k^{(+)} b_k^{(-)} , \tag{3.19}$$

where

$$b_k^{(-)} = \frac{1}{1 - e^{\beta\epsilon_k - \alpha}} . \tag{3.20}$$

Finally, if k is an intermediate state, we have

$$\sum_k e^{(\alpha - \beta\epsilon_k)n_k}(n_k + 1) = [\, b_k^{(+)} \,]^2 \quad . \tag{3.21}$$

We see then that each g_i in Eq. (3.4) is replaced by a C_i, where

$$C_i(k_1 k_2 \ldots k_r) = \sum_{s_1 s_2 \ldots} a(k_1 \ldots k_r;\, s_1 s_2 \ldots)[b_{s_1}^{(+)} b_{s_2}^{(+)} \ldots][b_{k_1}^{(-)} \ldots b_{k_r}^{(-)}] \quad . \tag{3.22}$$

This may be expressed as

$$C_i(k_1 \ldots k_r) = \frac{1}{2\pi i} \int dz \, \frac{1}{z^2} \, e^{-\beta z} \langle k_1 k_2 \ldots k_r \mid bV \frac{1}{z - (K - E_k)} bV \ldots bV \mid k_1 k_2 \ldots k_r \rangle_{G_i} \quad . \tag{3.23}$$

Here, in direct analogy to Eq. (3.9), b is a symbolic operator which introduces the appropriate weighting factors into the above products. For example,

$$(k_1 k_2 \mid bV \mid g_1 g_2) = b_{k_1}^{(\pm)} b_{k_2}^{(\pm)} (k_1 k_2 \mid v \mid g_1 g_2) \quad .$$

The $+$ sign is used for a virtual state and the $-$ sign for an initial (or final state).

Finally, we introduce, as in Eq. (3.11),

$$Q_G = \sum_{k_1 k_2 \ldots k_r} C_G(k_1 \ldots k_r) \quad . \tag{3.24}$$

The partition function is given by Eq. (3.12), except that Eq. (3.23) is used for C_G, and now

$$\mathcal{Z}_0 = \prod_k b_k^{(+)} = \prod_k [\, 1 - e^{\alpha - \beta\epsilon_k} \,]^{-1} \quad . \tag{3.25}$$

The entire development parallels that for Fermi-Dirac statistics. The only modification which has to be made is to replace the Fermi-Dirac weight factors $f_k^{(\pm)}$ by the $b_k^{(\pm)}$ appropriate to Bose-Einstein statistics.

A comment is required for the case of degenerate Bose-Einstein systems. Let us suppose, for example, that a finite fraction of all the particles is in the lowest state $\underset{\sim}{k} = 0$. In this case we can treat n_0 as a <u>large</u> number, as the creation and annihilation operators for this state commute. This permits us to use the Hugenholtz theorem to separate graphs even though many graphs involve interactions with particles in the state "0".

Care must also be exercised in carrying out statistical sums, such as in Eqs. (3.19) and (3.21). That is, many graphs may involve particles in the state "0" but only one sum is to be carried out over n_0. First let us set $n_0 + 1 \approx n_0$. Now in a typical term of Eq. (3.4) let us suppose that n_0 occurs μ times when all graphs are considered. Now, instead of Eqs. (3.19) and (3.21) we have

$$\sum_{n_0} e^{(\alpha - \beta\epsilon_0)n_0} \, n_0^{\mu} \approx [\, b_0^{(+)} \,] \, (\bar{n}_0)^{\mu} \, , \tag{3.26}$$

where $\bar{n}_0$ is the average number of particles in state "0". [Because n_0 is assumed large, the average of the product is set equal to the product of the averages.] The quantity $\bar{n}_0$, by Eq. (3.19), is just $b_0^{(-)}$. We are thus again led to Eqs. (3.23), (3.24), etc., so our conclusions are valid for degenerate Bose-Einstein systems.

IV. NONDEGENERATE GAS

The general method discussed in Section II can be applied to ordinary canonical ensembles as well as grand ensembles. Thus we now consider a nondegenerate gas and evaluate the partition function for a canonical ensemble. Let the number of particles in the system be N. The states of the system are specified by the N individual momenta, $| p \rangle = | p_1 \cdots p_N \rangle$. Thus the partition function is

$$Z = \frac{1}{N!} \sum_{p_1 \cdots p_N} e^{-\beta(\epsilon_{p_1} + \epsilon_{p_2} + \cdots \epsilon_{p_N})} \sum_{\text{all graphs}} \{ g_1 \cdots g_L \} , \qquad (4.1)$$

where

$$g_i = g_i(k_{1_i} k_{2_i} \cdots k_{r_i}) .$$

This expression follows directly from the fundamental result for the matrix elements of $e^{-\beta H}$ given in Eq. (2.20).

As before, the sum over graphs consists of two parts. First, for each g_i, the variables $(k_{1_i} k_{2_i} \cdots k_{r_i})$ are each summed over all momentum variables in the state $| p \rangle = | p_1 \cdots p_N \rangle$. Then a sum is made over all graphs that are topologically different. In taking the trace, one finally sums over all $(p_1 \cdots p_N)$. The first sum merely duplicates terms that occur in the sum over $(p_1 \cdots p_N)$, and may therefore be evaluated by simply counting the number of terms occurring.

In the approximation that the gas is nondegenerate, each k_i may take any of the values $(p_1 \ldots p_N)$. Hence the possibility is ignored of more than one particle's occupying the same state. The sum over all k_i then gives a factor

$$N^{\sum_i r_i} , \tag{4.2}$$

where r_i is the number of ingoing (or outgoing) lines in the graph g_i. In addition to this factor, the sum over $(k_{1_i} \ldots k_{r_i})$ permutes the order of topologically equivalent graphs. Thus, we must introduce (as was done before in Eq. (3.12)) the factor

$$\prod_G \frac{1}{N_G!} , \tag{4.3}$$

where N_G is the number of graphs topologically equivalent to G in a typical term in Eq. (4.1). We recall that this factor arises because these permutations are already included in the use of Hugenholtz's theorem.

For each p_i that is not equal to a k_i in one of the graphs, the sum over p in (4.1) gives a factor

$$\gamma \equiv \sum_{p_i} e^{-\beta \epsilon_{p_i}} . \tag{4.4}$$

Next, we introduce

$$\mathcal{J}_G \equiv \left(\frac{N}{\gamma} \right)^r \sum_{k_1 \ldots k_r} e^{-\beta(\epsilon_{k_1} + \ldots \epsilon_{k_r})} g_G(k_1 \ldots k_r) , \tag{4.5}$$

and the partition function in the absence of interactions,

$$Z_0 \equiv \frac{1}{N!} \sum_{p_1 \cdots p_N} e^{-\beta(\epsilon_{p_1} + \cdots \epsilon_{p_N})} .$$

This leads to the following expression for the partition function,

$$Z = Z_0 \sum_{N_G} \prod_G \frac{\mathcal{Z}_G^{N_G}}{N_G!}$$

or

$$Z = Z_0 \exp \left[\sum_G \mathcal{Z}_G \right] . \tag{4.6}$$

Here the sum over G implies, as usual, a sum over graphs which are topologically different. This is the same kind of expansion as given above for the grand function, i.e., an exponential of a sum of linked clusters.

For applications, we require the free energy, which is

$$F = -\beta^{-1} \ln Z$$

or

$$F = -\beta^{-1} \ln Z_0 - \beta^{-1} \sum_G \mathcal{Z}_G . \tag{4.7}$$

For convenient reference, we write in full the expression for $\mathcal{Z}_G$:

$$\mathcal{Z}_G = \left(\frac{N}{\gamma} \right)^r \sum_{k_1 \cdots k_r} e^{-\beta(\epsilon_{k_1} + \cdots \epsilon_{k_r})} \frac{1}{2\pi i} \int dz \; e^{-\beta z} \frac{1}{z^2}$$

$$\langle k_1 \cdots k_r \mid V \frac{1}{z - (K - E_k)} V \cdots V \mid k_1 \cdots k_r \rangle . \tag{4.8}$$

with

$$\gamma = \left[\frac{\mathcal{V}}{(2\pi)^3} \right] (2\pi \beta^{-1} M)^{3/2} \tag{4.9}$$

and

$$E_k = \epsilon_{k_1} + \cdots \epsilon_{k_r} .$$

We note the absence of weight factors in intermediate states (nondegenerate gas) and the Boltzmann factor for the initial states of a graph.

As a simple application of this result, we evaluate the second virial coefficient and obtain the result of Uhlenbeck and Beth.[20] For the second virial coefficient, we need consider only those terms in which a <u>single pair</u> of particles interacts. Let these have momenta $\underset{\sim}{k}_1$ and $\underset{\sim}{k}_2$. Then

$$\sum_G \mathcal{J}_G = \sum_{k_1 \ldots k_r} \left(\frac{N}{\gamma} \right)^2 e^{-\beta(\epsilon_{k_1} + \epsilon_{k_2})} \frac{1}{2\pi i} \int dz \frac{1}{dz} e^{-\beta z}$$

$$\langle k_1 k_2 \mid V + V \frac{1}{z + \epsilon_{k_1} + \epsilon_{k_2} - z} V + \cdots \mid k_1 k_2 \rangle , \tag{4.10}$$

where only those terms in V are kept which describe the scattering of the two given particles. Introduce the variables

$$\begin{aligned} \underset{\sim}{P} &= \underset{\sim}{k}_1 + \underset{\sim}{k}_2 , \\ \underset{\sim}{\kappa} &= \underset{\sim}{k}_1 - \underset{\sim}{k}_2 \end{aligned} \tag{4.11}$$

to replace $\underset{\sim}{k}_1$ and $\underset{\sim}{k}_2$. Since $\underset{\sim}{P}$ is a constant of the motion, the energy denominators in Eq. (4.10) become

$$z + \epsilon_{k_1} + \epsilon_{k_2} - K = z + T_0 - T ,$$

where $T_0 = \kappa^2/M$ and T is the kinetic energy operator for the relative motion of the two particles.

The quantity

$$R(z) \equiv V + V \frac{1}{z + T_0 - T} V + V \frac{1}{z + T_0 - T} V \frac{1}{z + T_0 - T} V + \cdots , \qquad (4.12)$$

which appears in Eq. (4.10), is the two-body <u>level shift</u> operator. On introducing a representation (κ, ℓ, m), where ℓ is the angular momentum of the two particles and m is its component along the axis of quantization, one can perform the integration over z in a straightforward way:[21]

$$\frac{1}{2\pi i} \int dz \, \frac{1}{z^2} \, e^{-\beta z} \langle \underset{\sim}{\kappa} | R(z) | \underset{\sim}{\kappa} \rangle$$

$$= \frac{4\pi\beta}{\mathcal{V} \kappa M} \sum_{\ell=0}^{\infty} (2\ell + 1) \, \delta_\ell(\kappa) \, . \qquad (4.13)$$

Here $\delta_\ell(\kappa)$ is the scattering phase shift for the ℓth partial wave. If the two-particle system has bound states, some additional terms are required in Eq. (4.13).

When Eq. (4.13) is substituted into Eq. (4.10), the result is

$$\sum_G \mathcal{J}_b = 16 \sqrt{\pi} \, \frac{N^2}{\mathcal{V}} \left(\frac{\beta}{M} \right)^{5/2} \sum_{\ell=0}^{\infty} (2\ell + 1) \int_0^\infty d\kappa \, \kappa \, e^{-\beta\kappa^2/M} \, \delta_\ell(\kappa) \, . \qquad (4.14)$$

We can now evaluate the free energy, using Eq. (4.7), and thus the equation of state, from the familiar relation

$$\mathcal{P} = - \left(\frac{\partial F}{\partial \mathcal{V}} \right)_\beta = \beta^{-1} \left[\frac{\partial (\ln Z)}{\partial \mathcal{V}} \right]_\beta .$$

Here $\mathcal{P}$ is the pressure and, of course, $\beta^{-1} = kT$. The immediate result is the first two terms in the virial expansion.

V. EXPECTATION VALUE OF AN OPERATOR

In this section we consider the ensemble average of operators of the form

$$\mathcal{O} = \sum_{\substack{q_1 \cdots q_\nu \\ q_1' \cdots q_\nu'}} \frac{1}{\nu!} (q_1' \cdots q_\nu' \,|\mathcal{O}|\, q_1 \cdots q_\nu)\, a_{q_1'}^{+} \cdots a_{q_\nu'}^{+} \; a_{q_1} \cdots a_{q_\nu} \; . \tag{5.1}$$

This expectation value of $\mathcal{O}$ is denoted by $\overline{\mathcal{O}}$. For the grand ensemble we have

$$\mathcal{Z}\overline{\mathcal{O}} = \mathrm{Tr}\,[\, e^{\alpha N}\, \mathcal{O}\, e^{-\beta H}\,] \; . \tag{5.2}$$

For the canonical ensemble, this expression is replaced by

$$Z\overline{\mathcal{O}} = \mathrm{Tr}\,[\, \mathcal{O}\, e^{-\beta H}\,] \; . \tag{5.3}$$

We give two different techniques for evaluating $\overline{\mathcal{O}}$. The first is formally very simple, but leads to somewhat more cumbersome expressions to evaluate than does the second method. In Appendix A the equivalence of the two methods is demonstrated.

It is convenient to think of $\mathcal{O}$ as a generalized scattering operator with ν incoming and ν outgoing lines, as is illustrated in Fig. (3). Connected graphs may then be constructed, as in Fig. (4) by connecting $\mathcal{O}$ to graphs involving the matrix elements of V.

In evaluating $\overline{\mathcal{O}}$, we first suppose that the diagonal matrix elements of $\mathcal{O}$ either vanish or give a negligible contribution to $\overline{\mathcal{O}}$. At the close of this section, the contribution of the diagonal elements is treated separately.

The reason why the diagonal elements require special consideration is clarified in Appendix B by a simple example whose solution can be found by other (elementary) means.

We define the function, for real λ ,

$$Y(\lambda) \equiv \mathrm{Tr}\,[\, e^{\alpha N}\, e^{-\beta(H + \lambda \mathcal{O})}\,] \quad . \tag{5.4}$$

For $\lambda = 0$, this simply reduces to the grand partition function, i.e., $Y(0) = \mathcal{Z}$. Furthermore, the first derivative of this function yields the average value of $\mathcal{O}$ defined in Eq. (5.2):

$$-\beta^{-1} \left.\frac{dY}{d\lambda}\right|_{\lambda=0} = \mathrm{Tr}\,[\, e^{\alpha N}\, \mathcal{O}\, e^{-\beta H}\,] = \mathcal{Z}\,\overline{\mathcal{O}} \quad . \tag{5.5}$$

If Y can be determined as a function of λ , the problem of finding the average value of an operator is reduced to once differentiating $Y(\lambda)$. The evaluation of $Y(\lambda)$ is achieved by simply taking over the development of Section III, except that V is replaced by

$$V' = V + \lambda\, \mathcal{O} \quad , \tag{5.6a}$$

and thus

$$H + \lambda\, \mathcal{O} = K + V' \quad . \tag{5.6b}$$

Of course the connected graphs involve both the generalized $\mathcal{O}$ interactions and the pair interactions V.

To be specific, the contribution of a particular type of graph $Q_G(\lambda)$, defined by Eq. (3.14), must now be considered a function of λ. Of course these quantities reduce to the previous functions for $\lambda = 0$:

$$Q_G(0) = Q_G \quad . \tag{5.7}$$

Again, in analogy to Eq. (3.12), we obtain an exponential form for $Y(\lambda)$,

$$Y(\lambda) = \mathcal{Z}_0 \exp \left[\sum_G Q_G(\lambda) \right] . \tag{5.8}$$

Therefore,

$$\frac{dY(\lambda)}{d\lambda}\Big|_{\lambda=0} = \mathcal{Z} \sum_G \frac{dQ_G(\lambda)}{d\lambda}\Big|_{\lambda=0} ,$$

and the average value of $\mathcal{O}$ is

$$\overline{\mathcal{O}} = -\beta^{-1} \sum_G \frac{dQ_G(\lambda)}{d\lambda}\Big|_{\lambda=0} . \tag{5.9}$$

To obtain $\overline{\mathcal{O}}$ for the canonical ensemble, we may carry out a similar analysis and consider

$$X(\lambda) = \mathrm{Tr} \left[e^{-\beta(H + \lambda\mathcal{O})} \right] . \tag{5.10}$$

Now $X(0) = Z$ and

$$-\beta^{-1} \frac{dX(\lambda)}{d\lambda}\Big|_{\lambda=0} = \mathrm{Tr} \left[\mathcal{O}\, e^{-\beta H} \right] = Z\,\overline{\mathcal{O}} . \tag{5.11}$$

In analogy to Eq. (4.6),

$$X(\lambda) = Z_0 \exp \left[\sum_G \mathcal{Z}_G(\lambda) \right] , \tag{5.12}$$

where $\mathcal{Z}_G$ is the quantity defined by Eq. (4.5), but with V replaced by V'. Differentiating, one obtains

$$\frac{dX(\lambda)}{d\lambda}\Big|_{\lambda=0} = Z \sum_G \frac{d\,{}_G(\lambda)}{d\lambda}\Big|_{\lambda=0} .$$

The average of $\mathcal{O}$ is thus

$$\bar{\mathcal{O}} = -\beta^{-1} \sum_G \frac{d\mathcal{J}_G(\lambda)}{d\lambda} \Big|_{\lambda=0} . \tag{5.13}$$

Before discussing the contribution of the diagonal elements we present an alternative procedure for evaluating $\bar{\mathcal{O}}$. We first recall the basic expansion in graphs for a matrix element of $e^{-\beta H}$, which is given in Eq. (2.20). In evaluating the average value of an operator, we are concerned with matrix elements of the form $\langle p | \mathcal{O} e^{-\beta H} | p \rangle$. The direct generalization of Eq. (2.20) is then simply

$$\langle p | \mathcal{O} e^{-\beta H} | p \rangle = \langle p | e^{-\beta H} | p \rangle \sum_{\text{all graphs}} [\mathcal{O} g_1 \cdots g_L] . \tag{5.14}$$

The "sum over all graphs" has the following meaning in this situation. We refer to the sum in Eq. (5.1), which goes over all states $(q_1' \cdots q_\nu' \; q_1 \cdots q_\nu)$ of the operators $a_{q_1'}^+ \cdots a_{q_\nu'}^+ \; a_{q_1} \cdots a_{q_\nu}$ in $\mathcal{O}$. In performing this sum we obtain all possibilities of connecting $\mathcal{O}$ to the original graphs. The graphs g which are connected to $\mathcal{O}$ in this way may now be separated from the remaining factors in Eq. (5.14) with the result

$$\langle p | \mathcal{O} e^{-\beta H} | p \rangle = \langle p | e^{-\beta K} | p \rangle \chi \sum_{\text{all graphs}} [g_1 \cdots g_L] , \tag{5.15}$$

where

$$\chi = \langle p | \sum_{\substack{\text{all graphs} \\ \text{linked to } \mathcal{O}}} [\mathcal{O} g_1 \cdots g_{L'}]_G | p \rangle . \tag{5.16}$$

In Eq. (5.16) each of the graphs $g_1 \cdots g_{L'}$ is linked directly to $\mathcal{O}$. The sum includes all connected graphs involving matrix elements of $\mathcal{O}$. Since $\mathcal{O}$ has ν incoming lines, we must always have $L' \leq \nu$.

In performing the sums over graphs, we sum independently over the graphs of X and over the graphs of the last factor $\sum_{\text{all graphs}} [\, g_1 \cdots g_L \,]$ in Eq. (5.15). Therefore,

$$\mathrm{Tr}\,[\, e^{\alpha N} \mathcal{O}\; e^{-\beta H} \,] = \mathcal{Z}\, \overline{X} \;, \tag{5.17}$$

where

$$\overline{X} = \mathrm{Tr}\,[\, \sum_{\text{all graphs}} [\, \mathcal{O}\, C_1 \cdots C_{L'} \,]_G \,] \;. \tag{5.18}$$

The C's were defined in Eq. (3.8) and $f\mathcal{O}$ contains the weight factors $f^{(-)}$ appropriate to the outgoing lines of $\mathcal{O}$. Thus, as in Eq. (3.9), the matrix elements of $f\mathcal{O}$ are

$$(q_1' \cdots q_{\nu'}' \mid f\mathcal{O} \mid q_1 \cdots q_\nu) = f_{q_1'}^{(-)} \cdots f_{q_{\nu'}}^{(-)} (q_1' \cdots q_{\nu'}' \mid \mathcal{O} \mid q_1 \cdots q_\nu) \;.$$

For Bose-Einstein statistics the operator f in Eq. (5.18) is replaced by b, defined in Eq. (3.23).

An alternative way of writing Eq. (5.18), valid for either Fermi-Dirac or Bose-Einstein statistics, is

$$\overline{\mathcal{O}} = \overline{X} = \mathrm{Tr}\,[\, \frac{1}{\mathcal{Z}_0}\, e^{\alpha N - \beta K} \sum_{\substack{\text{all graphs} \\ \text{linked to } \mathcal{O}}} [\, \mathcal{O}\, g_1 \cdots g_L \,]_G \,] \;. \tag{5.19}$$

This expression makes use of the notation of Bloch and deDominicis.

We have previously indicated that the diagonal parts of $\mathcal{O}$ have to be treated in a special way. This may be illustrated with the particular example $\mathcal{O} = \sum_{q'q} (q' \mid \mathcal{O} \mid q)\, a_{q'}^{+}\, a_q$, i.e., with an operator which has just one ingoing and one outgoing line. The leading term in $\overline{X}$ is clearly

$$\sum_q f_q^{(-)} (q \mid \mathcal{O} \mid q) \;. \tag{5.20}$$

This does not conform, however, to the general result of Eq. (5.14). The correct result is obtained by omitting from the sum over q in Eq. (5.20) those terms occurring in intermediate or initial states in the $[\, g_1 \cdots g_L]$.

The same conclusion may be reached more simply in the following way. Let us separate from $\mathcal{O}$ a typical diagonal term, i.e., one for which some ingoing line equals some outgoing line $(q = q_\mu{}' = q_\lambda)$. Then Eq. (5.1) may be rewritten as

$$\mathcal{O}_d = \sum_q \mathcal{O}(q)\, n_q \quad , \tag{5.21}$$

where we have simply contracted the two operators referring to the same state $(a_{q_\mu'}{}^+ a_{q_\lambda} = a_q{}^+ a_q = n_q)$ and incorporated all other factors into $\mathcal{O}(q)$. Now,

$$\begin{aligned} \mathcal{Z}\bar{\mathcal{O}}_d &= \mathrm{Tr}[\, e^{\alpha N}\, \mathcal{O}_d\, e^{-\beta H}\,] \\ &= \sum_q \frac{d}{d\lambda} \left\{ \mathrm{Tr}[\, e^{\alpha N + \lambda n_q}\, \mathcal{O}(q)\, e^{-\beta H}\,] \right\} \Big|_{\lambda=0} \quad , \end{aligned} \tag{5.22}$$

which leads us to define the following function of q and λ ,

$$\Lambda(q, \lambda) = \mathrm{Tr}[\, e^{\alpha N + \lambda n_q}\, \mathcal{O}(q)\, e^{-\beta H}\,] \quad . \tag{5.23}$$

This quantity may be evaluated by either Eq. (5.9) or Eq. (5.18).[22] The new feature implied by Eq. (5.23) is that, in the evaluation of the diagrams of $\Lambda(q, \lambda)$, α is replaced by $(\alpha + \lambda)$ in the weight factors $f_q{}^{(\pm)}$. Carrying out the differentiation in Eq. (5.22), one obtains the following formula for the average

$$\mathcal{O}_d = \mathcal{Z}^{-1} \sum_q \frac{\partial \Lambda(q, \lambda)}{\partial \lambda} \Big|_{\lambda=0} \quad . \tag{5.24}$$

To illustrate this result, we consider the very simple example,

$$\mathcal{O}_d = N = \sum_q n_q \ .$$

Now,

$$\sum_q \frac{\partial}{\partial\lambda} \left[e^{\alpha N + \lambda n_q} \right] \Big|_{\lambda=0} = \frac{\partial}{\partial\alpha} e^{\alpha N} \ ,$$

so that the familar result is obtained by this procedure,

$$\bar{N} = \frac{\partial \mathcal{Z}}{\partial \alpha} \ .$$

For a nondegenerate gas, we use the canonical ensemble (Section IV) and, by analogy with Eq. (5.18), write

$$\bar{\mathcal{O}} = \bar{X} = \sum_{\text{graphs}} \sum_{k_1 \ldots k_r} \left(\frac{N}{r} \right)^r (k_1 \ldots k_r \mid [\mathcal{O}\, g_1 \ldots g_{L'}]_G \mid k_1 \ldots k_r) \ . \tag{5.25}$$

In conclusion we note that the final formulae for the two procedures described in this section, Eqs. (5.9) and (5.18), are quite different. It is shown in Appendix A that these actually give the same result. In Appendix B we discuss in more detail the source of the complications that occur when $\mathcal{O}$ has diagonal elements.

VI. PAIR-CORRELATION FUNCTION FOR A SYSTEM OF INTERACTING FERMIONS

We now illustrate the above discussion of expectation values with the example of the pair-correlation function. We consider a system of interacting fermions and, in doing so, go beyond the familiar results for noninteracting particles.[23] On the other hand, we treat the interactions only in terms of the simple scattering graph shown in Fig. 1, and give a definite numerical result for the nondegenerate case. The reason for these restrictions is that we are now primarily concerned with illustrating the formal procedures discussed in this paper. This particular example has been studied with other methods by Blatt[24] and Karplus and Watson.[25]

We define the pair-correlation operator as

$$\mathcal{O}(\underset{\sim}{r}_1\, \underset{\sim}{r}_2) = \frac{1}{\overline{N^2}} \sum_{\substack{pp' \\ qq'}} e^{i\,[(\underset{\sim}{p} - \underset{\sim}{p}')\cdot \underset{\sim}{r}_1 + (\underset{\sim}{q} - \underset{\sim}{q}')\cdot \underset{\sim}{r}_2\,]}\, a_{p'}^{+}\, a_{q'}^{+}\, a_q\, a_p \;, \tag{6.1}$$

where $\overline{N^2}$ is the average of the square of the number of particles. As discussed in detail in the previous section, the diagonal part of $\mathcal{O}$ will have to be discussed apart from the nondiagonal part. The diagonal part of $\mathcal{O}$ is

$$\mathcal{O}_d = \frac{1}{\overline{N^2}} \sum_{pq} b(q,\, p) n_q\, n_p \;, \tag{6.2}$$

where

$$b(q,\, p) = [\, 1 - e^{i(\underset{\sim}{p} - \underset{\sim}{q})\cdot \underset{\sim}{r}}\,] \tag{6.3}$$

and $\underset{\sim}{r} = \underset{\sim}{r}_1 - \underset{\sim}{r}_2$. We note $b(q,\, q) = 0$, so that the sum in Eq. (6.2) involves only the terms for which $p \neq q$.

In treating the diagonal operator $\mathcal{O}_d$ we recall the discussion of the preceding section, particularly Eqs. (5.22) and (5.23). In this case we

have a sum of products of two-number operators and the expressions are only slightly more complicated than in Section V. In this case we introduce the function

$$\Lambda(p, q; \lambda_p, \lambda_q) = \mathcal{Z}_0(p, q; \lambda_p, \lambda_q) \exp \left[\sum_G Q_G(p, q; \lambda_p, \lambda_q) \right], \tag{6.4}$$

and evaluate the average value of $\mathcal{O}_d$ with the formula

$$\overline{\mathcal{O}_d} = \sum_{p\,q} b(p, q) \frac{\partial^2}{\partial\lambda_p \partial\lambda_q} \log \Lambda(p, q; \lambda_p, \lambda_q) \Big|_{\lambda_p=0, \lambda_q=0} . \tag{6.5}$$

The evaluation of $\Lambda(p, q; \lambda_p, \lambda_q)$ follows directly the development in Section III for the grand partition function (Eq. (3.12)). The only essential change is the replacement in the statistical factors $f_k^{(\pm)}$, (Eq. (3.7)) of α by $(\alpha + \lambda_p \delta_{kp} + \lambda_q \delta_{kq})$:

$$\begin{aligned} f_k^{(-)}(p, q; \lambda_p, \lambda_q) &= \left[1 + e^{\beta \epsilon_k - (\alpha + \lambda_p \delta_{kp} + \lambda_q \delta_{kq})} \right]^{-1} , \\ f_k^{(+)}(p, q; \lambda_p, \lambda_q) &= 1 - f_k^{(-)}(p, q; \lambda_p, \lambda_q) . \end{aligned} \tag{6.6}$$

Thus the function $\mathcal{Z}_0(p, q; \lambda_p, \lambda_q)$, which occurs in Eq. (6.4), is

$$\mathcal{Z}_0(p, q; \lambda_p, \lambda_q) = \left[\prod_k f_k^{(-)}(p, q; \lambda_p, \lambda_q) \right]^{-1} . \tag{6.7}$$

In a similar way the contribution $Q_G(p, q; \lambda_p, \lambda_q)$ of a graph of type G is evaluated from Eqs. (3.10) and (3.8) by using the new statistical factors of Eq. (6.6). Finally we note that the differentiations in Eq. (6.5) lead to an average value for $\mathcal{O}_d$ which consists of five terms,

$$\overline{O}_d = \sum_{p,q} b(p,q) \left[\mathcal{Z}_0^{-1} \left\{ \frac{\partial^2 \mathcal{Z}_0}{\partial\lambda_p \partial\lambda_q} + \left(\frac{\partial \mathcal{Z}_0}{\partial\lambda_p}\right) \frac{\partial}{\partial\lambda_q} \sum_G Q_G + \left(\frac{\partial \mathcal{Z}_0}{\partial\lambda_q}\right) \frac{\partial}{\partial\lambda_p} \sum_p Q_G \right\} \right.$$

$$\left. + \left(\frac{\partial}{\partial\lambda_p} \sum_G Q_G\right)\left(\frac{\partial}{\partial\lambda_q} \sum_G Q_G\right) + \frac{\partial^2}{\partial\lambda_p \partial\lambda_q} \sum_G Q_G \right]_{\lambda_p=0,\lambda_q=0} . \tag{6.8}$$

In this expression the dependence on $(p, q, \lambda_p, \lambda_q)$ has been suppressed inside the square brackets.

In evaluating the functions $\Lambda(p, q; \lambda_p, \lambda_q)$ as the exponential of a sum of topologically different graphs, we now make the main assumption of this section, which is to consider only the simple scattering diagram of Fig. 1. Its contribution Q_1 was evaluated in Eq. (3.15), and now becomes

$$Q_1(p, q; \lambda_p, \lambda_q) = -\frac{\beta}{2} \sum_{k_1 k_2} (k_1 k_2 \mid v \mid k_1 k_2) f_{k_1}^{(-)}(p,q; \lambda_p,\lambda_q) f_{k_2}^{(-)}(p,q; \lambda_p,\lambda_q) . \tag{6.9}$$

To complete the evaluation of $\overline{O}_d$ we need only perform the differentiations indicated by Eq. (6.8) on $\mathcal{Z}_0$ and Q_1, which are given in Eq. (6.7) and Eq. (6.9), respectively. Without going into further detail, the final result is

$$\overline{O}_d = 1 - \frac{1}{\overline{N}^2} \left[\sum_q f_q^{(-)} e^{-i\underset{\sim}{q}\cdot\underset{\sim}{r}} - \beta \sum_{k_1 k_2} e^{-i\underset{\sim}{k}_1\cdot\underset{\sim}{r}} \right.$$

$$\left. \times \langle k_1 k_2 \mid v \mid k_1 k_2 \rangle f_{k_1}^{(-)} f_{k_1}^{(+)} f_{k_2}^{(-)} \right]^2 . \tag{6.10}$$

The statistical factors in this equation are the original ones given in Eq. (3.7), since now $\lambda_p = \lambda_q = 0$. The contribution of the fifth term in Eq. (6.8), i.e., the term containing $(\partial^2/\partial\lambda_p\,\partial\lambda_q)\sum_G Q_G$, has been dropped since it is smaller than the others by a factor of $1/\mathcal{V}$. In the derivation of this result it has also been shown

$$\overline{N^2} = \left[\sum_q f_q^{(-)} - \beta \sum_{k_1 k_2} \langle k_1\, k_2 \mid v \mid k_1\, k_2 \rangle\, f_{k_1}^{(-)}\, f_{k_1}^{(+)}\, f_{k_2}^{(-)}\right]^2 . \tag{6.11}$$

In the limit of $\mathcal{V} \to \infty$ one also verifies $\overline{N^2} = \overline{N}^2$. Finally, for complete degeneracy, Eq. (6.10) reduces to the familiar formula

$$\overline{O}_d = 1 - \frac{\left[\sum_{q < p_F} e^{-i\underset{\sim}{q}\cdot\underset{\sim}{r}}\right]^2}{\left[\sum_{q < p_F} 1\right]^2} \tag{6.12}$$

We next evaluate the contribution from the nondiagonal part of the pair-correlation operator. We shall use the second method of calculating average values described in the preceding section and summarized by Eq. (5.18). The only nonvanishing graph involving a single scattering is illustrated in Fig. 4. In accordance with the discussion in Section III the contribution of this diagram is obtained from

$$C_1(k_1\, k_2) = \frac{1}{2\pi i} \int dz\, \frac{e^{-\beta z}}{z} \langle k_1\, k_2 \mid O \frac{1}{z - (K - \epsilon_{k_1} - \epsilon_{k_2})} V \mid k_1\, k_2 \rangle_{G_1} , \tag{6.13}$$

where G_1 is the graph in Fig. 4. When Eq. (2.4) is substituted for V and Eq. (6.1) for $\bigcirc$ and the contour integration is carried out, this becomes

$$C_1(k_1\, k_2) = \sum_{\ell\, m} b(k_1\, k_2,\, m\ell)(\ell m \mid v \mid k_1\, k_2)\, f_{k_1}^{(-)}\, f_{k_2}^{(-)}\, f_m^{(+)}\, f_\ell^{(+)} \times \frac{\left[e^{-\beta(\epsilon_\ell + \epsilon_m - \epsilon_{k_1} - \epsilon_{k_2})} - 1\right]}{\epsilon_\ell + \epsilon_m - \epsilon_{k_1} - \epsilon_{k_2}} . \tag{6.14}$$

Here b is simply the coefficient of the operators appearing in the definition of $\bigcirc$ in Eq. (6.1),

$$b(k'\, q';\, k\, q) = e^{i[(\underset{\sim}{k} - \underset{\sim}{k}')\cdot \underset{\sim}{r}_1 + (\underset{\sim}{q} - \underset{\sim}{q}')\cdot r_2]} . \tag{6.15}$$

The last factor in Eq. (6.14) comes from the contour integration. The complete nondiagonal contribution is then obtained by summary over k_1 and k_2 :

$$\overline{\bigcirc}_{nd} = -2 \sum_{k_1 k_2} \sum_{\ell m} \frac{b(k_1\, k_2,\, m\ell)(\ell m \mid v \mid k_1\, k_2)}{\epsilon_\ell + \epsilon_m - \epsilon_{k_1} - \epsilon_{k_2}}\, f_{k_1}^{(-)}\, f_{k_2}^{(-)}\, f_\ell^{(+)}\, f_m^{(+)} .$$

We note that when these last summations are introduced, the two terms of Eq. (6.14) give equal contributions. This may be shown with the help of the relation

$$f_{k_1}^{(-)}\, f_\ell^{(-)}\, e^{-\beta(\epsilon_\ell - \epsilon_{k_1})} = f_{k_1}^{(+)}\, f_\ell^{(-)} ,$$

and by relabeling the sums in Eq. (6.16). Finally, this expression may be simplified by using Eq. (2.5) for $(\ell m \mid v \mid k_1\, k_2)$ and Eq. (6.15) for $b(k_1\, k_2,\, m\ell)$, and by replacing sums by integrals in the usual way,

$$\overline{\mathcal{O}}_{nd} = - \frac{V^2}{\overline{N}^2} \frac{2}{(2\pi)^9} \int d^3k_1 \int d^3k_2 \int d^3\ell \int d^3m \; \delta(\underset{\sim}{k}_1 + \underset{\sim}{k}_2 - \underset{\sim}{\ell} - \underset{\sim}{m})$$

$$\times \; f_{k_1}^{(-)} f_{k_2}^{(-)} f_{\ell}^{(+)} f_m^{(+)} \; e^{-i(\underset{\sim}{k}_1 - \underset{\sim}{\ell})\cdot \underset{\sim}{r}} \frac{w(\underset{\sim}{k}_1 - \underset{\sim}{\ell}) - w(\underset{\sim}{k}_1 - \underset{\sim}{m})}{\epsilon_\ell + \epsilon_m - \epsilon_{k_1} - \epsilon_{k_2}} \; . \tag{6.16}$$

Here w represents the Fourier transform of the potential v ,

$$w(\underset{\sim}{q}) = \int d^3r \; v(\underset{\sim}{r}) \; e^{-i\underset{\sim}{q}\cdot\underset{\sim}{r}} \; . \tag{6.17}$$

The complete expression for the pair-correlation function is the sum of the diagonal and nondiagonal contributions, i.e., the sum of Eq. (6.10) and Eq. (6.16). We shall now obtain a quantitative estimate of the pair-correlation function by making the further approximation of nondegeneracy. Thus the statistical factors are now

$$f_k^{(-)} \simeq e^{\alpha - \beta\epsilon_k} \; , \qquad\qquad f_k^{(+)} \simeq 1 \; .$$

In addition we shall ignore the exchange part of the potential.

The diagonal contribution, Eq. (6.10), now assumes the form

$$\overline{\mathcal{O}}_d(r) = 1 - \frac{V^2}{\overline{N}^2} \left[\frac{2}{(2\pi)^3} \int d^3q \; e^{-i\underset{\sim}{q}\cdot\underset{\sim}{r} + \alpha - \gamma^2 q^2} \right.$$

$$\left. - \beta w(0) \frac{1}{(2\pi)^6} \int d^3k_1 \int d^3k_2 \; e^{-i\underset{\sim}{k}_1\cdot\underset{\sim}{r} + 2\alpha - \gamma^2(k_1^2 + k_2^2)} \right]^2 \; , \tag{6.18}$$

and Eq. (6.11) becomes

$$\overline{N} = (\overline{N^2})^{1/2} = V \left[\frac{2}{(2\pi)^3} \int d^3q \, e^{\alpha - \gamma^2 q^2} - \beta w(0) \frac{1}{(2\pi)^6} \int d^3k_1 \int d^3k_2 \, e^{2\alpha - \gamma^2(k_1 + k_2^2)} \right] . \tag{6.19}$$

The length γ is defined as

$$\gamma^2 = \beta(\hbar^2/2m) .$$

The square brackets in Eq. (6.18) is the same as that in Eq. (6.19) except for the dependence on $\underset{\sim}{r}$. But this dependence may be removed by completing the square in the exponentials in Eq. (6.18), and leads to a factor $e^{-r^2/4\gamma^2}$ for each bracket. There Eq. (6.18) is simply

$$\overline{O}_d(r) = 1 - e^{-r^2/2\gamma^2} . \tag{6.20}$$

The second term is a quantum-mechanical correction arising from the repulsive effect of the exclusion principle. It is important only for particle separations of the order of the deBroglie wave length, i.e., for $r \sim \gamma$.

Returning to the nondiagonal contribution in Eq. (6.16), two integrations can be done immediately with the aid of the transformation $\underset{\sim}{k}_1 = \underset{\sim}{\kappa} + \underset{\sim}{k}$, $\underset{\sim}{k}_2 = \underset{\sim}{\kappa} - \underset{\sim}{k}$, $\underset{\sim}{\ell} = \underset{\sim}{\kappa}' - \underset{\sim}{k}'$, and $\underset{\sim}{m} = \underset{\sim}{\kappa}' + \underset{\sim}{k}'$. The result is

$$\overline{O}_{nd} = - \frac{V^2}{\overline{N^2}} \left(\frac{\beta}{\gamma^2} \right) e^{2\alpha} \frac{2^3}{(2\pi)^9} \left(\sqrt{\frac{\pi}{2}} \frac{1}{\gamma} \right)^3 I . \tag{6.21}$$

$$I = \int d^3s \, v(s) \int d^3k \, e^{-2\gamma^2 k^2 - i\underset{\sim}{k}\cdot\underset{\sim}{x}} \int d^3k' \, \frac{e^{i\underset{\sim}{k}'\cdot\underset{\sim}{x}}}{k'^2 - k^2} . \tag{6.22}$$

We have used Eq. (6.17) for the Fourier transform of the potential and put $\underset{\sim}{x} = \underset{\sim}{r} - \underset{\sim}{s}$. The integration over $\underset{\sim}{k'}$ is

$$- \frac{2\pi i}{x} \int_0^\infty dk' \, k' \, \frac{e^{ik'x}}{k' - k^2} = \frac{1}{2} (2\pi)^2 \frac{1}{x} \left(e^{ikx} + e^{-ikx} \right) ,$$

where the contour corresponding to the principal value has been chosen. The integration over $\underset{\sim}{k}$ can also be carried out and the final result for I is

$$I = \frac{(2\pi)^3}{4\gamma^3} \sqrt{\frac{\pi}{2}} \int d^3x \; v(\, | \underset{\sim}{r} - \underset{\sim}{x} | \,) \frac{1}{x} \, e^{-x^2/2\gamma^2} \quad . \tag{6.23}$$

If we are interested in correlations for separations considerably larger than γ, we may regard v as constant in doing the integration and obtain a closed form for the integral:

$$I = \pi \left(\sqrt{\frac{\pi}{2}} \, \frac{1}{\gamma} \right) (2\pi)^3 \, v(r) \quad . \tag{6.24}$$

The complete calculation of the nondiagonal contribution also requires evaluation of the chemical potential α from the total number of particles. Neglect of the first-order effect of the potential in Eq. (6.19) leads to

$$e^{-\alpha} = \frac{V}{\bar{N}} \, \frac{2}{(2\pi)^3} \left(\frac{\sqrt{\pi}}{\gamma} \right)^3 \quad . \tag{6.25}$$

Collecting all these results, one finds the nondiagonal contribution to the pair-correlation function to be simply $v(r)/kT$. Adding this to the diagonal part for $r >> \gamma$, one has for the pair-correlation function

$$\overline{O} = 1 - v(r)/kT \quad . \tag{6.26}$$

This is just the classical result and it serves to verify the techniques introduced in the preceding section. In addition it should be noted that the

result of Karplus and Watson[25] for the nondegenerate case may also be shown to lead to this result.

In conclusion we should like to point out that the entire discussion of this paper refers to general annihilation and creation operators satisfying the commutation relations for Fermi and Bose statistics, and not just to those referring to free-particle states. They may, for example, refer to collective variables such as those introduced by Bogolubov[26] and Sawada.[27] This problem will be studied in detail in a separate publication.

APPENDIX A

We domonstrate here (for Fermi-Dirac statistics) the equivalence of the two methods given in Section V for evaluating $\bar{\sigma}$. An analogous demonstration can be given for the Bose-Einstein case. The contribution of a typical graph to Eq. (5.18) may be written

$$T = \frac{1}{2\pi i} \int dz^{-\beta z} Q \left(\frac{f_0}{z} \right) \left(\frac{f_1}{z + \Delta_{0,1}} \right) \cdots \left(\frac{f_J}{z + \Delta_{0,J}} \right) , \tag{A.1}$$

where

$$\Delta_{0,1} \equiv E_0 - E_i \tag{A.2}$$

and

$$Q = (0 \mid 0 \mid 1)(1 \mid V \mid 2)(2 \mid V \mid 3) \cdots (J \mid V \mid 0) . \tag{A.3}$$

The label zero refers to the initial state, and the intermediate states are enumerated with the integers from 1 to J . In the carrying out of the comparison, sums are not made over the intermediate or initial states in this expression. The factors f_0, $f_1 \cdots f_J$ represent the appropriate statistical factors $f^{(\pm)}$.

The analogous term in Eq. (5.9) is

$$-\beta\, T^{(0)} = \frac{1}{2\pi i} \int dz\, e^{-\beta z} Q \left[\left(\frac{f_0}{z^2} \right) \left(\frac{f_1}{z + \Delta_{0,1}} \right) \cdots \left(\frac{f_J}{z + \Delta_{0,J}} \right) \right] . \tag{A.4}$$

In addition to this, there are J <u>other</u> terms obtained by cyclic permutation of the factors in Q . A typical permutation of Eq. (A.4) is

$$-\beta T^{(\ell)} = \frac{1}{2\pi i} \int dz\, e^{-\beta z} \frac{f^{(\ell)}_{J-\ell+1}}{z^2} (J - \ell + 1 \mid V \mid J - \ell + 2)$$

$$\times \frac{f^{(\ell)}_{J-\ell+2}}{z + \Delta_{J-\ell+1,\, J+\ell+2}} (J - \ell + 2 \mid V \mid J - \ell + 3) \ldots \frac{f^{(\ell)}_{J}}{z + \Delta_{J+\ell+1,\, J}} (J \mid V \mid 0)$$

$$\times \frac{f^{(\ell)}_{0}}{z + \Delta_{J+\ell+1,\, 0}} (0 \mid 0 \mid 1)(1 \mid V \mid 2) \ldots (J - \ell \mid V \mid J - \ell + 1) \quad . \tag{A.5}$$

Now, the matrix elements of V and $\mathcal{O}$ in this expression may be combined and set equal to Q, defined by Eq. (A.3), so that one has

$$-\beta T^{(\ell)} = Q \frac{1}{2\pi i} \int dz\, e^{-\beta z}$$

$$\times f^{(\ell)} \frac{1}{z^2} f^{(\ell)} \frac{1}{z + \Delta_{J-\ell+1,\, J-\ell+2}} \ldots f^{(\ell)} \frac{1}{z + \Delta_{J-\ell+1,\, J-\ell}} \quad . \tag{A.6}$$

If the new variable,

$$z' = z + \Delta_{J+\ell+1,\, 0} \quad , \tag{A.7}$$

is introduced, the energy denominators in Eq. (A.6) may be rewritten as

$$\frac{1}{z'} \frac{1}{z' + \Delta_{0,\, 1}} \frac{1}{z' + \Delta_{0,\, 2}} \cdots \frac{1}{z' + \Delta_{0,\, J+\ell+1}}$$

$$\times \frac{1}{z' + \Delta_{0,\, J+\ell+1}} \frac{1}{z' + \Delta_{0,\, J+\ell}} \cdots \frac{1}{z' + \Delta_{0,\, J}} \quad . \tag{A.8}$$

At the same time, the following equation holds:

$$e^{-\beta z} = e^{-\beta z'} e^{\beta(E_{J+\ell+1} - E_0)} . \tag{A.9}$$

Because we have

$$f_k^{(\pm)} e^{(\alpha - \beta\epsilon_k)} = f_k^{(\pm)} ,$$

the second factor in Eq. (A.9) may be used to convert the f_ℓ's in Eq. (A.6) into the $f_0 \cdots f_J$ of Eq. (A.4).

Finally, the complete term associated with the second method is

$$\sum_{\ell=0}^{J} T^{(\ell)} = -\beta^{-1}[\, Q\, f_0 \cdots f_J \,] \frac{1}{2\pi i} \int dz\, e^{-\beta z} \left\{ \frac{1}{z^2} \frac{1}{z + \Delta_{0,\,1}} \cdots \frac{1}{z + \Delta_{0,\,J}} \right.$$

$$+ \frac{1}{z} \frac{1}{(z + \Delta_{0,\,1})^2} \cdots \frac{1}{z + \Delta_{0,\,J}}$$

$$+ \cdots$$

$$\vdots$$

$$\left. + \frac{1}{z} \frac{1}{z + \Delta_{0,\,1}} \cdots \frac{1}{(z + \Delta_{0,J})^2} \right\} .$$

This may be rewritten as

$$\beta^{-1} [\, Q\, f_0 \cdots f_J] \frac{1}{2\pi i} \int dz\, e^{-\beta z} \left\{ - \frac{d}{dz} \frac{1}{z} \frac{1}{z + \Delta_{0,\,1}} \cdots \frac{1}{z + \Delta_{0,\,J}} \right\} , \tag{A.10}$$

which, after partial integration, is simply T. We have thus shown that the terms of Eq. (5.9) combine in groups to give the terms of Eq. (5.18).

APPENDIX B

We attempt to clarify here the complications which arose in Section V in handling diagonal terms in the operator $\mathcal{O}$. For purposes of illustration, we consider the evaluation of the grand partition function for the Hamiltonian

$$H = K + V ,$$
$$V = \sum_k b_k n_k . \tag{B.1}$$

Here each b_k is a real number representing the "potential energy" of a particle with momentum k. This example is chosen because the grand partition function may be evaluated directly to give

$$\mathcal{Z} = \prod_k [1 + e^{\alpha - \beta(\epsilon_k + b_k)}] . \tag{B.2}$$

We now evaluate $\mathcal{Z}$ by the methods of Section III, using Eq. (2.20), which now takes the specific form

$$e^{-\beta H} = e^{-\beta K} \sum_{\ell_1, \ell_2 \cdots} \prod_k g(k, \ell_k) . \tag{B.3}$$

Here, for $\ell_k = 1, 2, 3, \ldots$, we have

$$g(k, \ell_k) = \frac{1}{2\pi i} \int dz \frac{e^{-\beta z}}{z^{\ell_k + 1}} b_k^{\ell_k} n_k , \tag{B.4}$$

and for $\ell_k = 0$,

$$g(k, 0) = 1 . \tag{B.5}$$

Equation (B.3) is easily verified directly, since we have

$$\sum_{\ell} g(k, \ell) = e^{-\beta b_k n_k} . \tag{B.6}$$

Now, following the notation of Section III, one obtains

$$\mathcal{Z} = \mathrm{Tr}\,[\, e^{\alpha N} e^{-\beta H} \,] = \mathcal{Z}_0 \sum_{\ell_1, \ell_2, \ldots} \prod_k C(\ell, \ell_k) , \tag{B.7}$$

where (for $\ell_k = 1, 2, 3, \ldots$)

$$C(k, \ell_k) = \frac{1}{2\pi i} \int dz \, \frac{e^{-\beta z}}{z^{\ell_k + 1}} \, b_k^{\ell_k} f_k^{(-)} . \tag{B.8}$$

For $\ell_k = 0$,

$$C(k, \ell_k) = 1 . \tag{B.9}$$

Then sum over these factors is easily carried out,

$$\sum_{\ell=0}^{\infty} C(k, \ell) = 1 + f_k^{(-)} \, [\, e^{-\beta b_k} - 1 \,] \equiv 1 + L_k , \tag{B.10}$$

where L_k is simply the second term of the result. Equation (B.7) is clearly equivalent to Eq. (B.2), since

$$[\, 1 + e^{\alpha - \beta \epsilon_k} \,] \, [\, 1 + L_k \,] = 1 + e^{\alpha - \beta(\epsilon_k + b_k)} ;$$

the first factor on the left comes from the $\mathcal{Z}_0$ in Eq. (B.7).

To see the relation of this development to the exponential formula of Section III, we consider

$$\prod [\, 1 + L_k \,] = 1 + \sum_k L_k + \sum_{k' < k''} L_{k'} L_{k''} + \sum_{k' < k'' < k'''} L_{k'} L_{k''} L_{k'''} + \cdots . \tag{B.11}$$

Now, if terms such as L_k^2 are negligible, we may write this as

$$\prod_k [1 + L_k] = 1 + \sum_k L_k + \frac{1}{2!} \left(\sum_k L_k \right)^2 + \dots$$

$$= \exp \left(\sum_k L_k \right) . \tag{B.12}$$

This shows the relation to the graphical analysis of Section III, since each L_k is a sum of connected graphs. The factorials here arise just as they did in the sums of Section III.

The error in Eq. (B.12) may be seen by examining

$$\ln \left[\prod_k (1 + L_k) \right] = \sum_k \ln(1 + L_k) = \sum_k [L_k + (L_k^2)] . \tag{B.13}$$

For

$$\sum_k L_k^2 << \sum_k L_k$$

the expression (B.12) is valid. This condition is satisfied when the b_k are very small. The corresponding case in Sections III and V obtains when the matrix elements of V and $\mathcal{O}$ are individually very small (for example, of order $\mathcal{V}^{-1}$), a finite result being obtained only on performing a sum.

REFERENCES

1. N. Hugenholtz, Physica 23, 481 (1957).

2. Kenneth M. Watson, Phys. Rev. 103, 489 (1958).

3. K. A. Brueckner, Phys. Rev. 100, 36 (1955).

4. H. D. Ursell, Proc. Cambridge Phil. Soc. 23, 685 (1927).

5. J. E. Mayer, J. Chem. Phys. 5, 67 (1937).

6. E. E. Salpeter, Ann. Phys. 5, 183 (1958).

7. T. D. Lee and C. N. Yang, Phys. Rev.

8. T. Matsubara, Progr. Theoret. Phys. (Kyoto) 14, 351 (1955).

9. D. J. Thouless, Phys. Rev. 107, 1162 (1957).

10. G. C. Wick, Phys. Rev. 80, 268 (1950).

11. Claude Bloch, Nuclear Phys. 7, 451 (1958).

12. C. Bloch and C. deDominicis, Nuclear Phys. 7, 459 (1958) and two succeeding papers to be published.

13. Leon van Hove, lecture given at the University of California, September 1958.

14. E. Montroll and J. Ward, Phys. of Fluids 1, 55 (1958).

15. Thus the examples of graphs in Fig. 1 include definite momenta for all the states involved.

16. If either $|p_1'\rangle$ or $|p_2'\rangle$ is the same as $|p\rangle$, the corresponding graph will be repeated indefinitely in the expansion of both sides of Eq. (2.14) in powers of V_1 and V_2. This causes no difficulty, since we may replace V_1 by g_1V_1 and V_2 by g_2V_2 and equate corresponding powers of g_1 and g_2 on both sides of the equation.

17. W. Riesenfeld and K. M. Watson, Phys. Rev. 104, 492 (1956).

18. Of course $\mathcal{Z}_0$ is simply the grand partition function for the noninteracting system.

19. J. Goldstone, Proc. Roy. Soc. (London) 239A, 267 (1957).

20. G. E. Uhlenbeck and E. Beth, Physica 3, 729 (1936).

21. See, for example, the discussion in Reference 16.

22. If $\mathcal{O}(q)$ itself contains diagonal elements of importance, the procedure described here must be applied again.

23. See, for example, the discussion in $\mathcal{P}$117 of Statistical Physics, L. D. Landau and E. M. Lifshitz (Pergamon, 1958).

24. J. Blatt, Nuovo Cimento 4, 430 (1950).

25. R. Karplus and K. M. Watson, Phys. Rev. 107, 1205 (1957).

26. N. N. Bogolubov, Nuovo Cimento 7, 794 (1958).

27. K. Sawada, Phys. Rev. 106, 1372 (1957).

FIGURE CAPTIONS

Fig. 1: Contour of integration C for Eq. (2.8).

Fig. 2: Typical low-order graphs in the expansion of $(E - H)^{-1}$: (a) simple scattering graph; (b) repeated scattering of two particles, (c) example of a disconnected graph.

Fig. 3: Generalized scattering operator with ν ingoing and ν outgoing lines.

Fig. 4: Simple scattering graph linked to the pair-correlation operator $\bigcirc$.

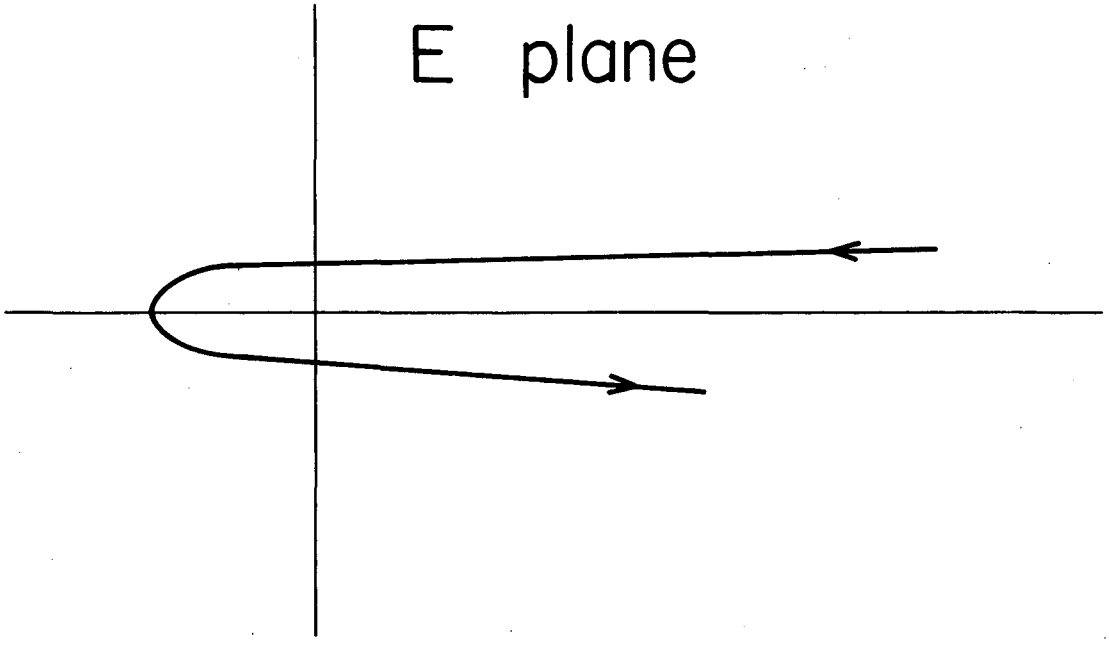

MU-16584

Fig. 1

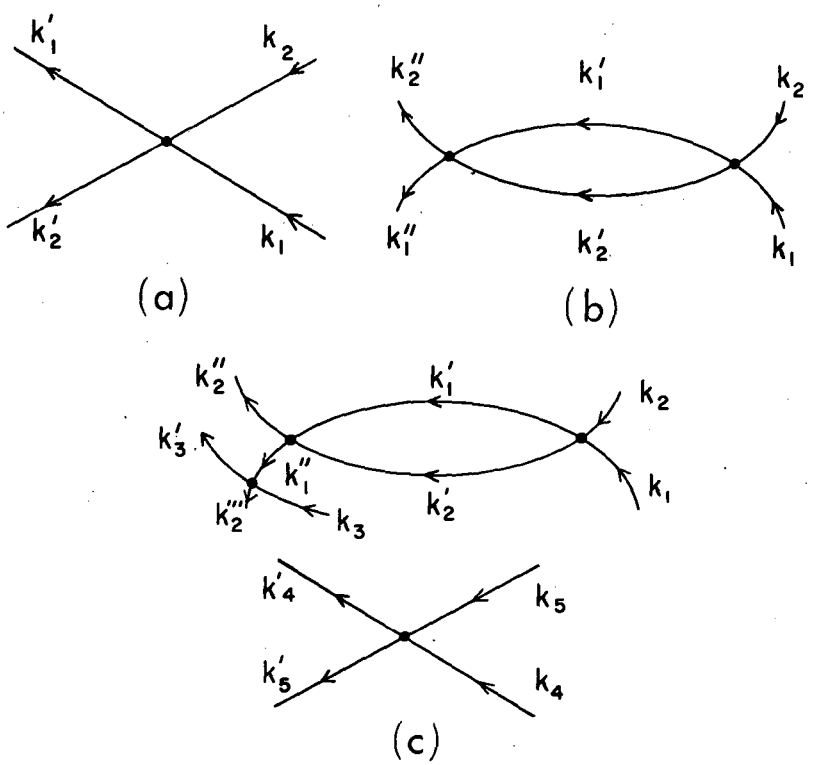
k'1
k2
k'2
k1
(a)
k''2
k'1
k2
k''1
k'2
k1
(b)
k''2
k'1
k2
k'3
k''1
k'''2
k3
k'2
k1
k'4
k5
k'5
k4
(c)
MU-16582

Fig. 2

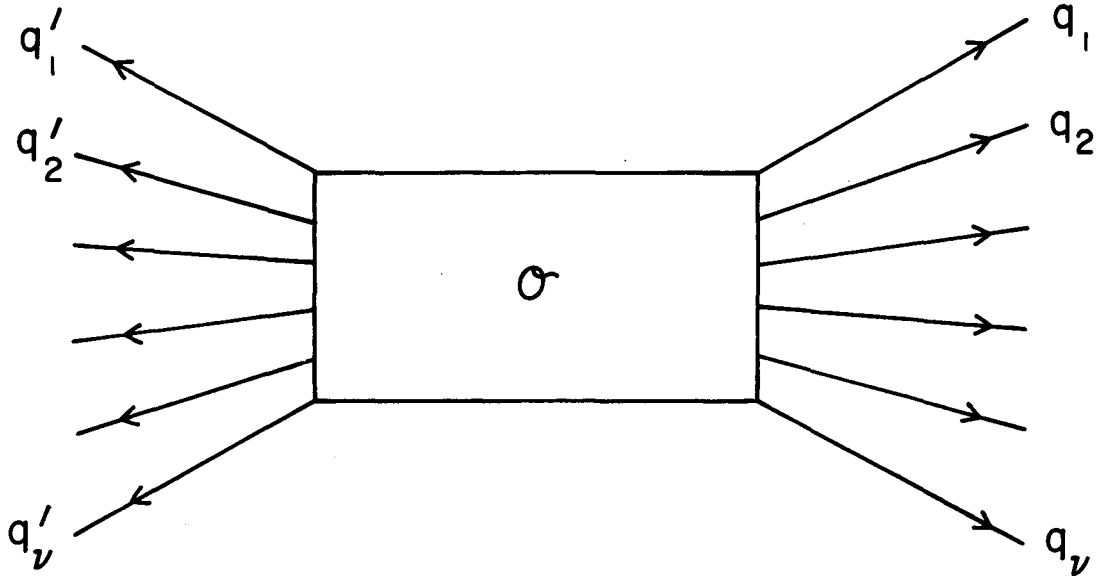

MU-16585

Fig. 3

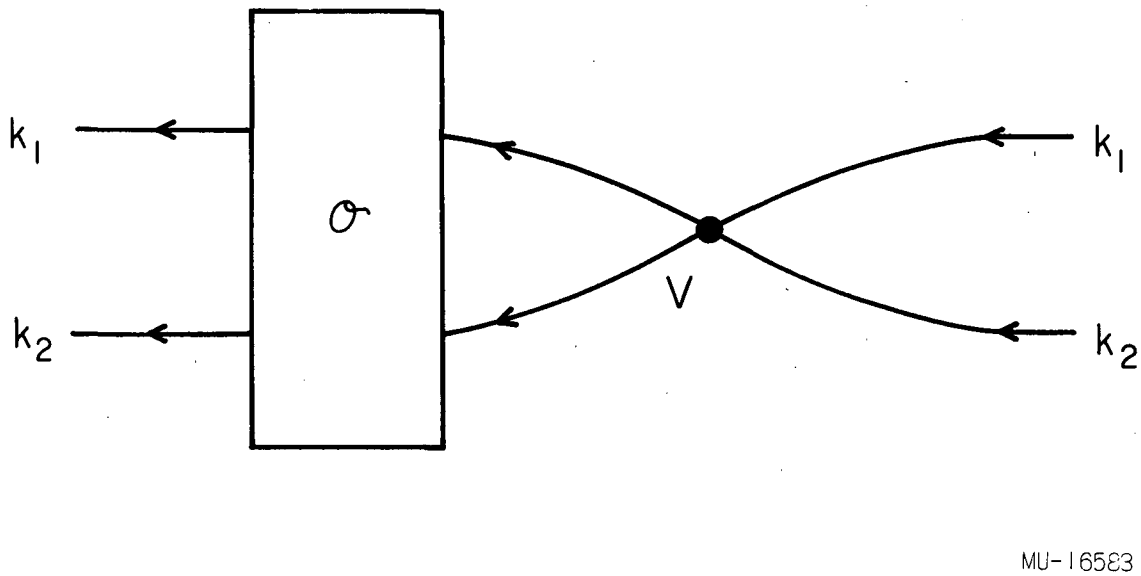

Fig. 4

This report was prepared as an account of Government sponsored work. Neither the United States, nor the Commission, nor any person acting on behalf of the Commission:

A. Makes any warranty or representation, expressed or implied, with respect to the accuracy, completeness, or usefulness of the information contained in this report, or that the use of any information, apparatus, method, or process disclosed in this report may not infringe privately owned rights; or

B. Assumes any liabilities with respect to the use of, or for damages resulting from the use of any information, apparatus, method, or process disclosed in this report.

As used in the above, "person acting on behalf of the Commission" includes any employee or contractor of the Commission, or employee of such contractor, to the extent that such employee or contractor of the Commission, or employee of such contractor prepares, disseminates, or provides access to, any information pursuant to his employment or contract with the Commission, or his employment with such contractor.