UCRL 8588

UNIVERSITY OF CALIFORNIA

Radiation Laboratory

BERKELEY, CALIFORNIA

DISCLAIMER

This document was prepared as an account of work sponsored by the United States Government. While this document is believed to contain correct information, neither the United States Government nor any agency thereof, nor the Regents of the University of California, nor any of their employees, makes any warranty, express or implied, or assumes any legal responsibility for the accuracy, completeness, or usefulness of any information, apparatus, product, or process disclosed, or represents that its use would not infringe privately owned rights. Reference herein to any specific commercial product, process, or service by its trade name, trademark, manufacturer, or otherwise, does not necessarily constitute or imply its endorsement, recommendation, or favoring by the United States Government or any agency thereof, or the Regents of the University of California. The views and opinions of authors expressed herein do not necessarily state or reflect those of the United States Government or any agency thereof or the Regents of the University of California.

UCRL-8588

UNIVERSITY OF CALIFORNIA

Lawrence Radiation Laboratory
Berkeley, California

Contract No. W-7405-eng-48

A MILLIMICROSECOND PULSE GENERATOR CAPABLE OF 10 MILLION PULSES PER SECOND

Michiyuki Nakamura

January 14, 1959

Printed for the U.S. Atomic Energy Commission

A MILLIMICROSECOND PULSE GENERATOR CAPABLE OF 10 MILLION PULSES PER SECOND

Michiyuki Nakamura

Lawrence Radiation Laboratory
University of California
Berkeley, California

January 14, 1959

ABSTRACT

A portable pulse generator with output pulses in the millimicrosecond (mμsec) region at high repetition rates is described. The generator has repetition rates of up to 10^7 pulses per second, pulse rise times of less than 2.5 mμsec, and pulse widths adjustable from 2.5 to 25 mμsec. The output pulse is negative in polarity, from 0 to 12 volts amplitude into 125 ohms impedance. The instrument has provisions for gating, single pulsing, and operation with drive from an external signal source. The instrument weighs 40 pounds.

A MILLIMICROSECOND PULSE GENERATOR CAPABLE OF 10 MILLION PULSES PER SECOND*

Michiyuki Nakamura

Lawrence Radiation Laboratory
University of California
Berkeley, California

January 14, 1959

INTRODUCTION

Mercury-relay-type pulse generators[1] with output pulses of less than 1 millimicrosecond rise time are available, but these generators are usually limited to repetition rates of less than a few hundred cycles per second. Pulse generators capable of rates above 1 Mc generally have output pulse rise times on the order of 10^{-8} second or slower. Some generators have faster rise times at repetition rates of more than 1 Mc, but their output levels are on the order of less than 1 volt.

It can be shown that the minimum pulse width that may be formed by clipping lines is equal to the rise time of the pulse. Because of this phenomenon, narrow pulses can be formed only from pulses of comparable rise times.

The pulse generator described here is a unit with an output pulse rise time of less than 2.5 mμsec and repetition rates of up to 10^7 pulses per second. The output pulse amplitude is 0 to 12 volts. The pulse width is adjusted by the use of external clipping lines from 2.5 to 25 mμsec. The instrument employs circuitry and techniques that require a minimum of circuit complexity and power-supply demands, resulting in a small, portable unit.

---

*Work done under the auspices of the U.S. Atomic Energy Commission.

[1]Val Fish, Jr., A Coaxial Mercury Relay for Fast Pulse Generation, UCRL-3602, July , 1955.

SPECIFICATIONS AND OPERATION OF THE PULSE GENERATOR

The repetition rate of the pulser may be controlled by an internal generator, a single-pulse push button, or an external signal source. Positive pulses from an external signal source of at least 5 volts amplitude will trigger the pulse generator from 0 to 10^7 pulses per second. Sine-wave input from an external source may be used, but the input amplitude requirement varies with input frequency, as shown in Fig. 1. The internal generator frequency is controlled by a six-decade coarse-frequency selector switch and a fine-frequency control. The internal generator frequency range is 10 cps to 10 Mc.

A positive 20-volt pulse, 50 mμsec wide, precedes the output pulse by approximately 10 mμsec for initiating timing or triggering oscilloscopes.

The instrument has provisions for gated operation. For "ungated" operation the gate is open, and all pulses are allowed through. For "gated" operation the gate remains closed if no signal (i.e., a 0-volt signal) appears at the gate input. The gate is opened by a positive 20-volt signal and may be turned on or off in less than 0.1 microsecond. Figure 2 shows some bursts of pulses that are obtainable when the gating feature of the instrument is used in conjunction with the internal generator. Because there is no provision for synchronizing the gate with the internal generator, the first and last pulses in the train of pulses may not always be full amplitude. Bursts of pulses are useful for simulating operation with pulsed accelerators and checking equipment for such items as repetition-rate sensitivity, base-line shift, and pile-up.

The output of the instrument is designed to operate into 125-ohm impedance. Three output channels are available that are coincident in time. The output pulse in each of the channels is independently adjustable for amplitude and pulse width. The output pulse is of negative polarity, 0 to 12 volts in amplitude when feeding a 125-ohm system. The instrument could easily be

modified to operate into other impedance levels. The pulse width is adjustable from 2.5 to 25 mμsec by means of external clipping lines. Output wave-forms are shown in Fig. 3 by means of multiple exposures. Figure 3A indicates the range in amplitude available, and Fig. 3B indicates the range in pulse widths attainable. These signals are displayed directly on the deflection plates of a cathode-ray tube in a Tektronix 517 oscilloscope. With the rise-time limitations of the cathode-ray tube (1.2 mμsec rise time) and the interaction of the signal with the horizontal sweep accounted for, the rise time of the output pulse is calculated to be less than 2.5 mμsec.

Because of the use of clipping lines for determining the output pulse widths, there is no reverse terminating resistor in the instrument. This feature necessitates the use of good termination in the output circuit if reflections are to be eliminated.

The input power requirement varies with output repetition rate. When the output repetition rate is 10^7 pulses per second, the power requirement is approximately 200 watts at 117 volts ac.

CIRCUIT DESCRIPTION

A simplified block diagram of the instrument is shown in Fig. 4. The tubes associated with each function are indicated. The schematic circuit diagram is shown in Fig. 5.

The single-pulse and external-drive input signals trigger a square-wave generator (SWG) (V1, V2, and V3A) when the coarse-frequency range-selector switch is in position 7. This switch is the four-deck switch shown in Fig. 5.

In switch position 7 the SWG becomes a monostable multivibrator. The SWG is basically the same switching circuit used in a 40-Mc scaler.[2] This switching circuit is capable of very fast switching speeds[3] and is partly responsible for the simplicity of circuit design in the instrument. The SWG may be triggered at a rate up to 10^7 per second by positive pulses of at least 5 volts amplitude. With external-drive input pulses or single pulses there is no lower limit on the repetition rate. With sine-wave input signals the required input-signal amplitude for triggering the SWG varies with input frequency as described before.

In the other six positions of the switch (positions 1 through 6) the SWG becomes an astable multivibrator. The coarse-frequency range of the astable multivibrator is determined by the RC timing networks selected. By returning the resistors in the RC timing network to an adjustable potential, one can vary the frequency of the SWG over a 10-to-1 range for any selected RC timing network. The frequency range of the internal generator from 10 to 10^7 pulses per second is covered by six decade steps in conjunction with the fine-frequency control.

The SWG is capable of fast switching speeds with a resultant output-signal rise time on the order of 25 mμsec. This fast rise time allows sharp differentiation of the square-wave signal. The reason for differentiating the signal sharply is to keep the duty factor of the amplifiers that follow from becoming excessive at the high repetition rates. The fast rise time also contributes to the simplicity of the instrument; a smaller number of amplifying stages is required.

---

[2] M. Nakamura, "Forty-Megacycle Scaler," Rev. Sci. Instr. 28 1015 - 1020 (1957).

[3] Melvin Brown, "Greater Gain Bandwidth in Trigger Circuits," UCRL-8473, Sept. 1958.

The Gate (V3B) employs a cathode follower coupling the differentiated signal from the SWG to the first amplifier V4. When the gate switch is in the "ungated" position, the cathode follower biases V4 just beyond cutoff. In this "ungated" position the signals from the SWG are sufficient to bring V4 into conduction from just beyond cutoff. When the gate switch is in the "gated" position, V4 is biased well beyond cutoff, and signals from the SWG cannot bring the grid of V4 into conduction. A positive 20-volt signal to the gate (V3B) is required to bring the grid of V4 to a bias level such that signals from the SWG can be amplified.

The amplifiers V5 through V7 are each biased beyond cutoff and are driven into conduction by the signal. Signal inversion between each amplifier stage is accomplished by pulse transformers. The transformer windings, a 2-to-1 step-down, reduce the capacitive loading of the following grid input to the preceding stage. The signal drives each amplifier stage into conduction from cutoff, progressively steepening the rise time of the signal. Figure 6 indicates this process of steepening the signal wave form. The input signal is of sufficient amplitude that it overcomes the bias level beyond cutoff and drives the grid of the amplifier well into conduction. The value "a" indicated in Fig. 6A is slow-rising and is not amplified. The portion of the signal labeled "b" is that part of the signal which is amplified. Figure 6B indicates the improved wave form obtainable from such an operation.

This method of bringing the amplifier into conduction from cutoff with the aid of inverting step-down transformers has three advantages: (a) the steepest portion of the input pulse may be selected for amplification; (b) the following input-stage loading to the preceding stage is reduced; and (c) the

power-supply requirements are minimized because large quiescent currents in the amplifiers are not required.

Because each amplifier is driven well into conduction, the plate dissipation of the amplifiers at high repetition rates can be kept within tube ratings only by limiting the duty factor. This is done by differentiating the signal from the SWG, thus narrowing the signal pulse width. This differentiation limits the maximum pulse width obtainable from the instrument to 25 mμsec.

The positive trigger-output signal is taken from the grid of V5 and isolated from the amplifier stages by an output pulse amplifier (V14) with a pulse-transformer output.

Output amplifiers V9, V11, and V13 are fed from the same source and driven into conduction from cutoff. The amplitude of the output signal is a function of the plate and screen voltages of the output amplifier tubes. These voltages are controlled by cathode followers V8, V10, and V12, whose cathode potentials are independently adjustable. The output pulse is of negative polarity, 0 to 12 volts in amplitude when fed into 125 ohms impedance. Had the instrument been designed to feed into other impedance levels, the output amplitude would have been different.

The output pulse width is adjusted by the double transit time in the clipping lines, which are externally connected to the instrument; 125-ohm cable such as RG 63/U must be used in this instrument for clipping lines. The average velocity of propagation in RG 63/U is 9.9 inches per mμsec. Because the rise time of the pulse is less than 2.5 mμsec, the minimum pulse width may be clipped to less than 2.5 mμsec. The maximum pulse width of 25 mμsec is

limited by the pulse within the instrument. The positive overshoot of the signal resulting from the clipping action is eliminated from the output by a combination of series and shunt diodes.

If positive output signals are desired, or if output impedance levels other than 125 ohms are required, transformers[4] similar in construction to the interstage transformers may be used for inversion or impedance transformation.

The unit has a self-contained power supply, which is shown in Fig. 7. Note the use of semiconductor devices for simplifying the power-supply design. Because of the simple circuitry and the small power-supply requirements, the instrument is small and compact. The portable pulse generator is packaged in a box approximately 14-1/2 × 11 × 11-1/4 inches and weighs 40 pounds. See Fig. 8. Note external clipping lines at the rear of the instrument.

ACKNOWLEDGMENTS

The author would like to thank Mr. Frank Evans, who has previously shown that output pulses of fast rise time could be attained by using techniques similar to those described here. The author would also like to thank Mr. Dick A. Mack for his helpful discussions and suggestions.

---

[4] N. Winningstad, Nanosecond Pulse Transformers, IRE Trans. on Nuclear Sci. (paper presented at meeting at San Mateo, California, Nov. 6-7, 1958).

LEGENDS

Fig. 1. External-drive input requirements for sine-wave signals vs. frequency.

Fig. 2. Bursts of 10-Mc pulses obtained when gating feature is used (vertical sensitivity = 16 volts/cm; horizontal sweep = 0.25 μsec/cm).

Fig. 3. Multiple exposures of output wave forms. (A) Output amplitude variations. (B) Output pulse-width variations (vertical sensitivity = 16 volts/cm; horizontal sweep = 5 mμsec/cm).

Fig. 4. Simplified block diagram of pulse generator.

Fig. 5. Circuit diagram of pulse generator.

Fig. 6. Amplifier input (A) and output (B) wave forms, indicating steepening of pulse rise time (wave forms not necessarily to same scale).

Fig. 7. Circuit diagram of power supply for pulse generator.

Fig. 8. Pulse generator.

49

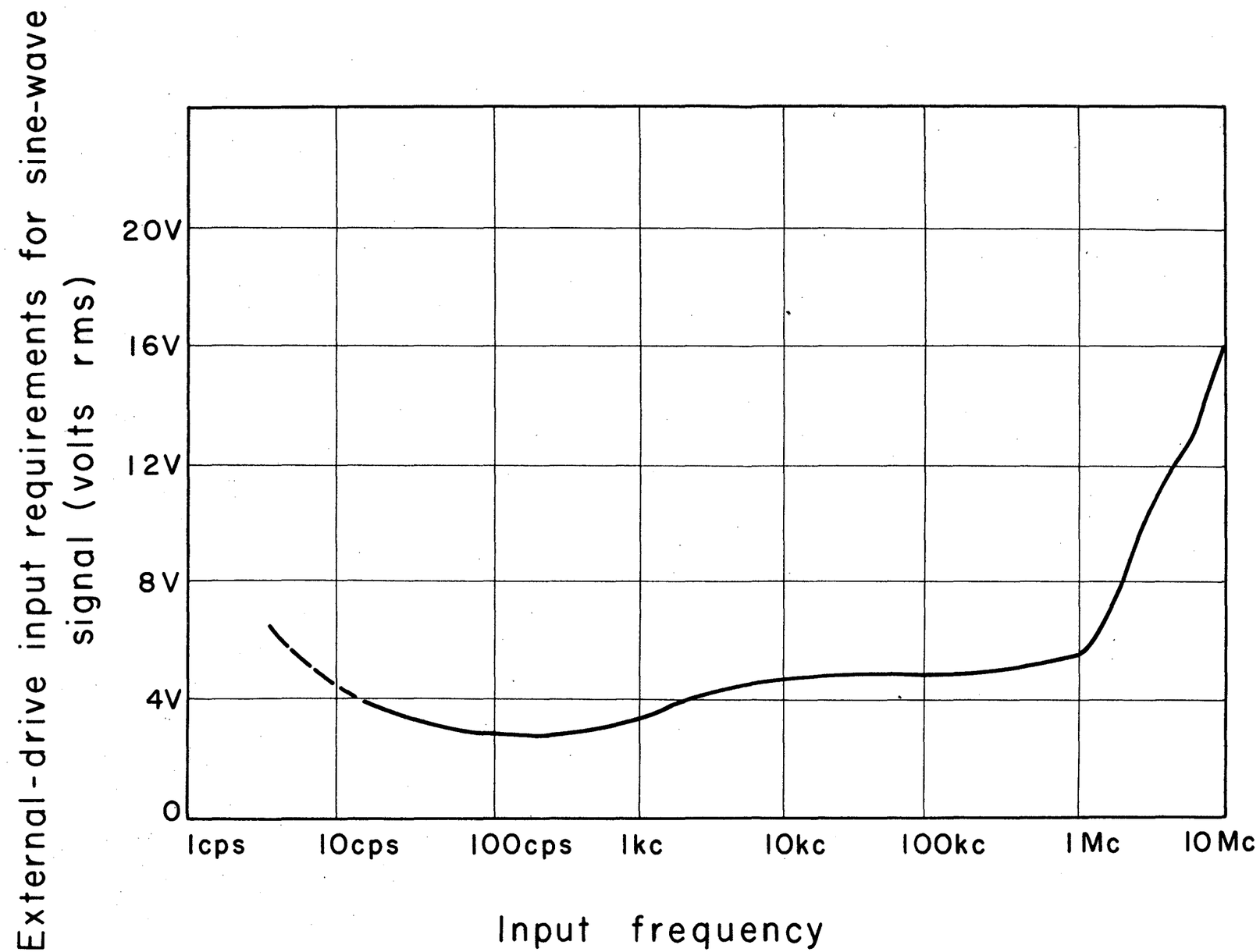

MU-16710
55,152-1

Fig. 1.

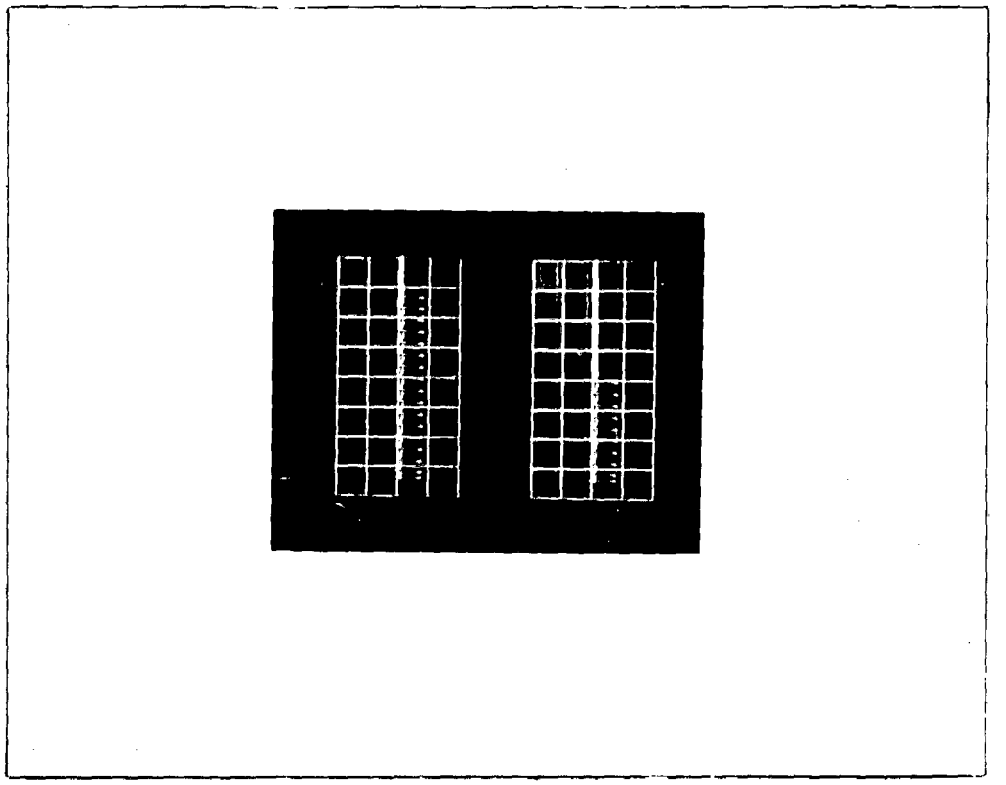

Fig. 2

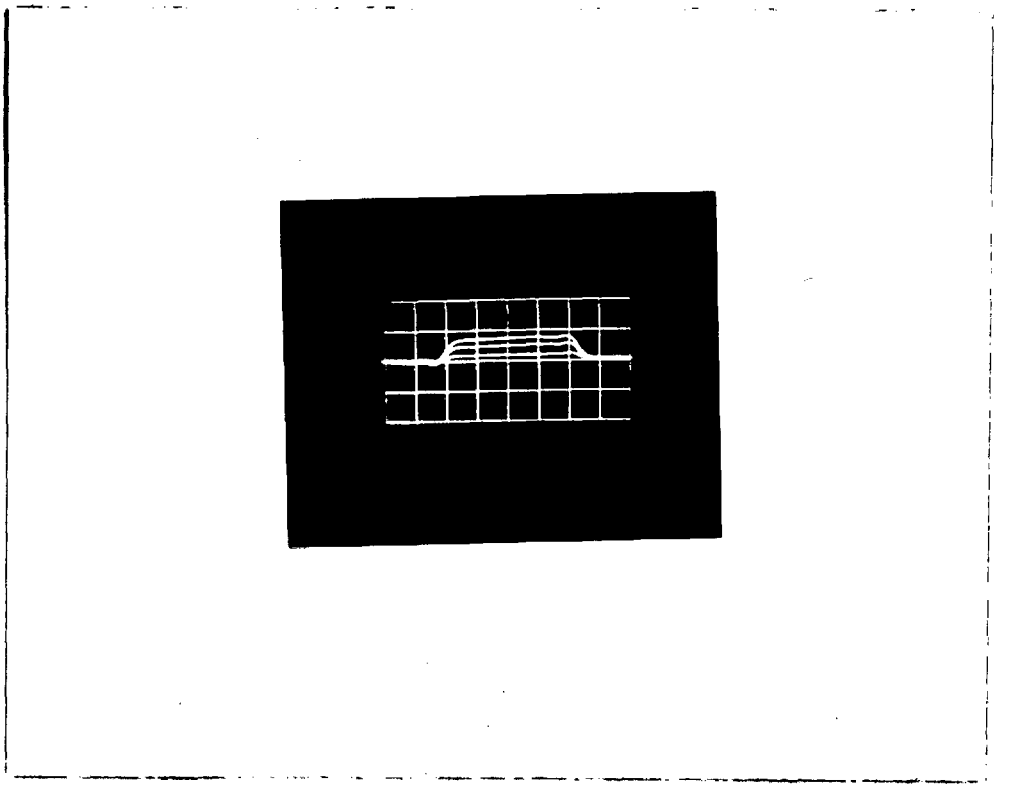

Fig. 3A

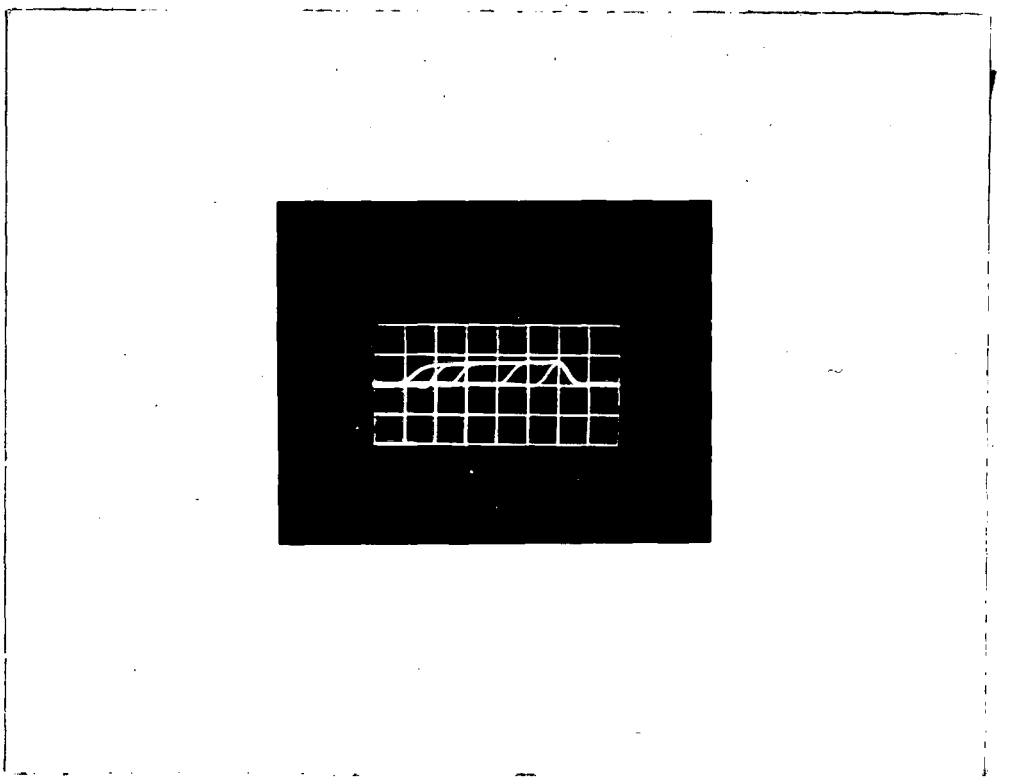

Fig. 3B

55

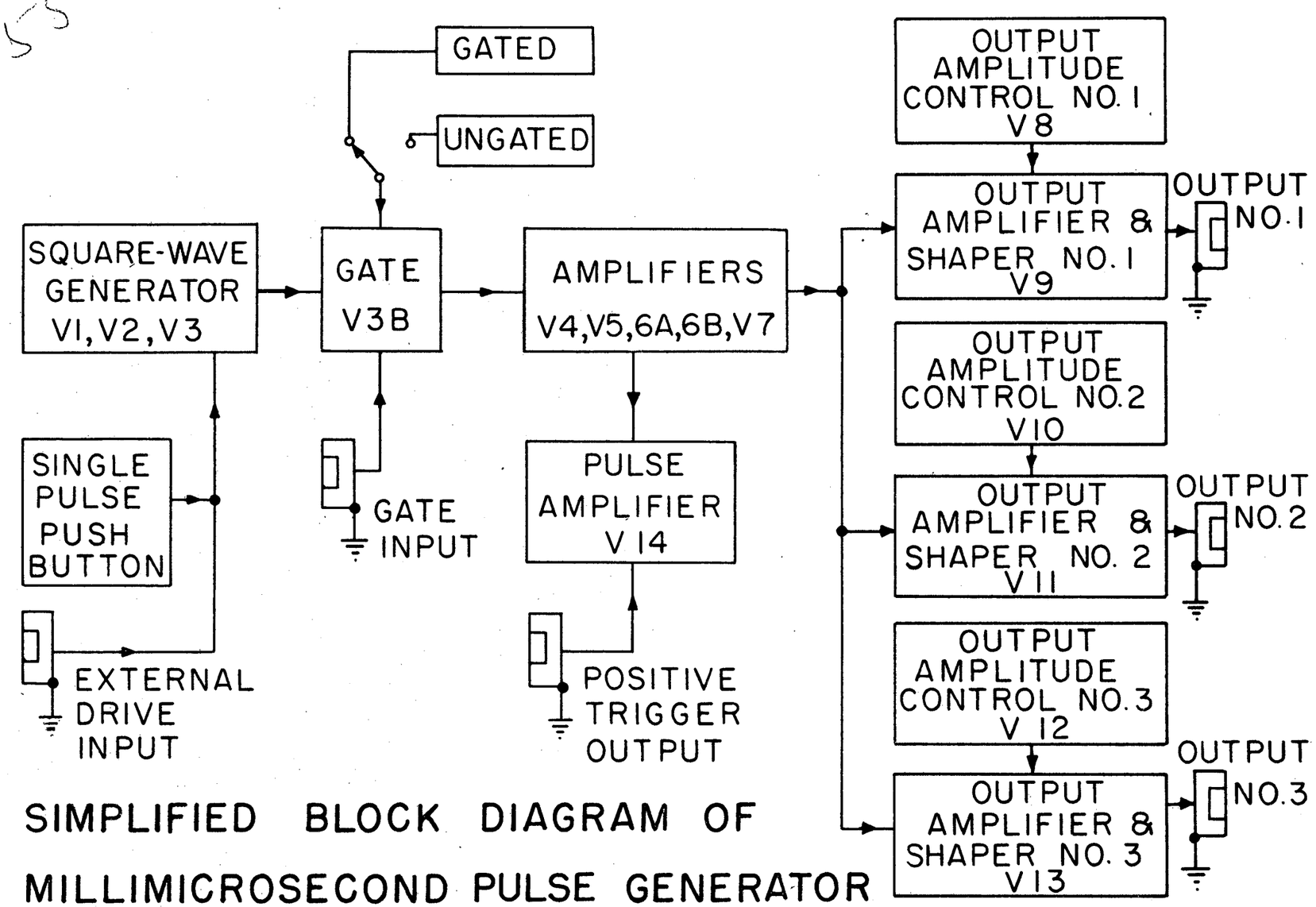

SIMPLIFIED BLOCK DIAGRAM OF MILLIMICROSECOND PULSE GENERATOR

55,024-2 Fig. 4.

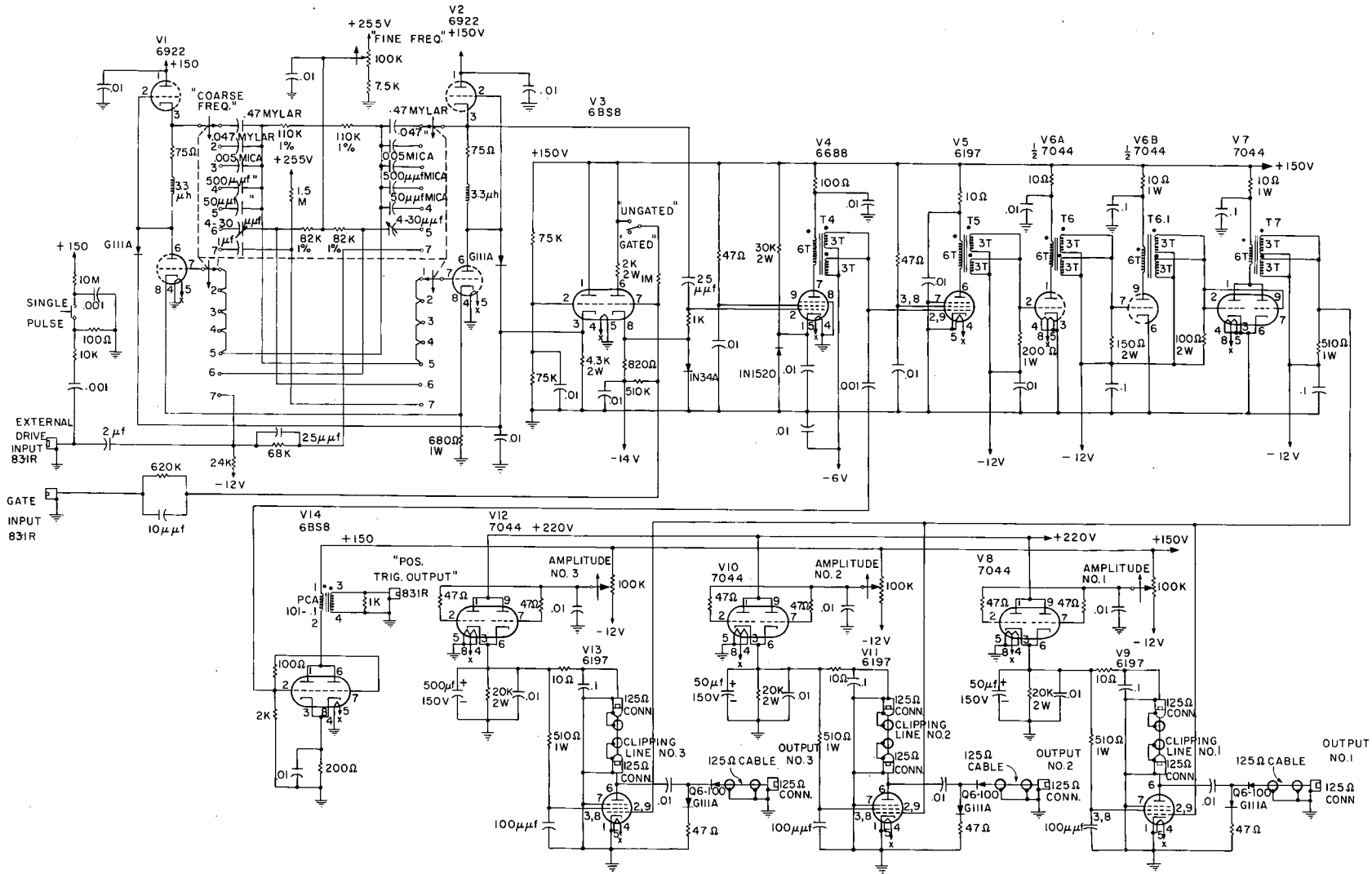
V1
6922
+150
"COARSE FREQ."
.47 MYLAR
.047 MYLAR
.005 MICA
500μμf MICA
50μμf MICA
4-30μμf
1μf
75Ω
3.3 μh
110K 1%
110K 1%
+255V
1.5 M
82K 1%
82K 1%
+25.5V
"FINE FREQ."
100K
7.5K
V2
6922
+150V
.047"
.005 MICA
500μμf MICA
50μμf MICA
4-30μμf
75Ω
3.3μh
G111A
+150
10M
.001
SINGLE PULSE
100Ω
10K
.001
EXTERNAL DRIVE INPUT 831R
2μf
25μμf
68K
24K
-12V
620K
GATE INPUT 831R
10μμf
680Ω 1W
V3
6BS8
+150V
75K
"UNGATED"
"GATED"
2K 2W
1M
4.3K 2W
820Ω
510K
75K
-14V
25 μμf
1K
IN34A
47Ω
30K 2W
IN1520
V4
6688
100Ω
T4
-6V
V5
6197
10Ω
T5
-12V
V6A
½ 7044
10Ω
T6
200Ω 1W
-12V
V6B
½ 7044
10Ω 1W
T6.1
150Ω 2W
100Ω 2W
-12V
V7
7044
+150V
10Ω 1W
T7
510Ω 1W
-12V
V14
6BS8
+150
"POS. TRIG. OUTPUT"
831R
PCA 101-1
1K
100Ω
2K
200Ω
V12
7044
+220V
47Ω
AMPLITUDE NO. 3
100K
-12V
500μf 150V
20K 2W
V13
6197
10Ω
125Ω CONN.
CLIPPING LINE NO. 3
510Ω 1W
125Ω CABLE
Q6-100 G111A
100μμf
47Ω
V10
7044
AMPLITUDE NO. 2
50μf 150V
V11
6197
CLIPPING LINE NO. 2
OUTPUT NO. 3
V8
7044
+220V
+150V
AMPLITUDE NO. 1
V9
6197
CLIPPING LINE NO. 1
OUTPUT NO. 2
OUTPUT NO. 1
125Ω CONN

Fig. 5

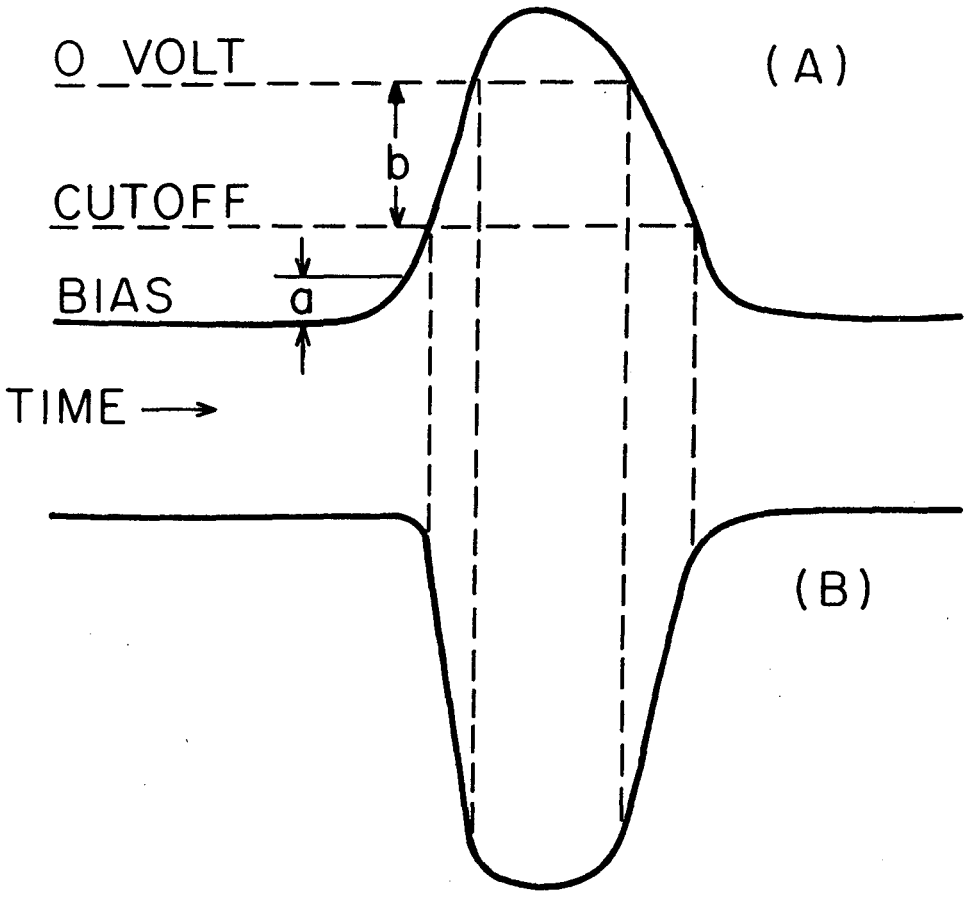

AMPLIFIER INPUT (A) & OUTPUT (B) WAVEFORMS, INDICATING STEEPENING OF PULSE RISE TIME (WAVEFORMS NOT NECESSARILY TO SAME SCALE)

Fig. 6.

55,025-1

41

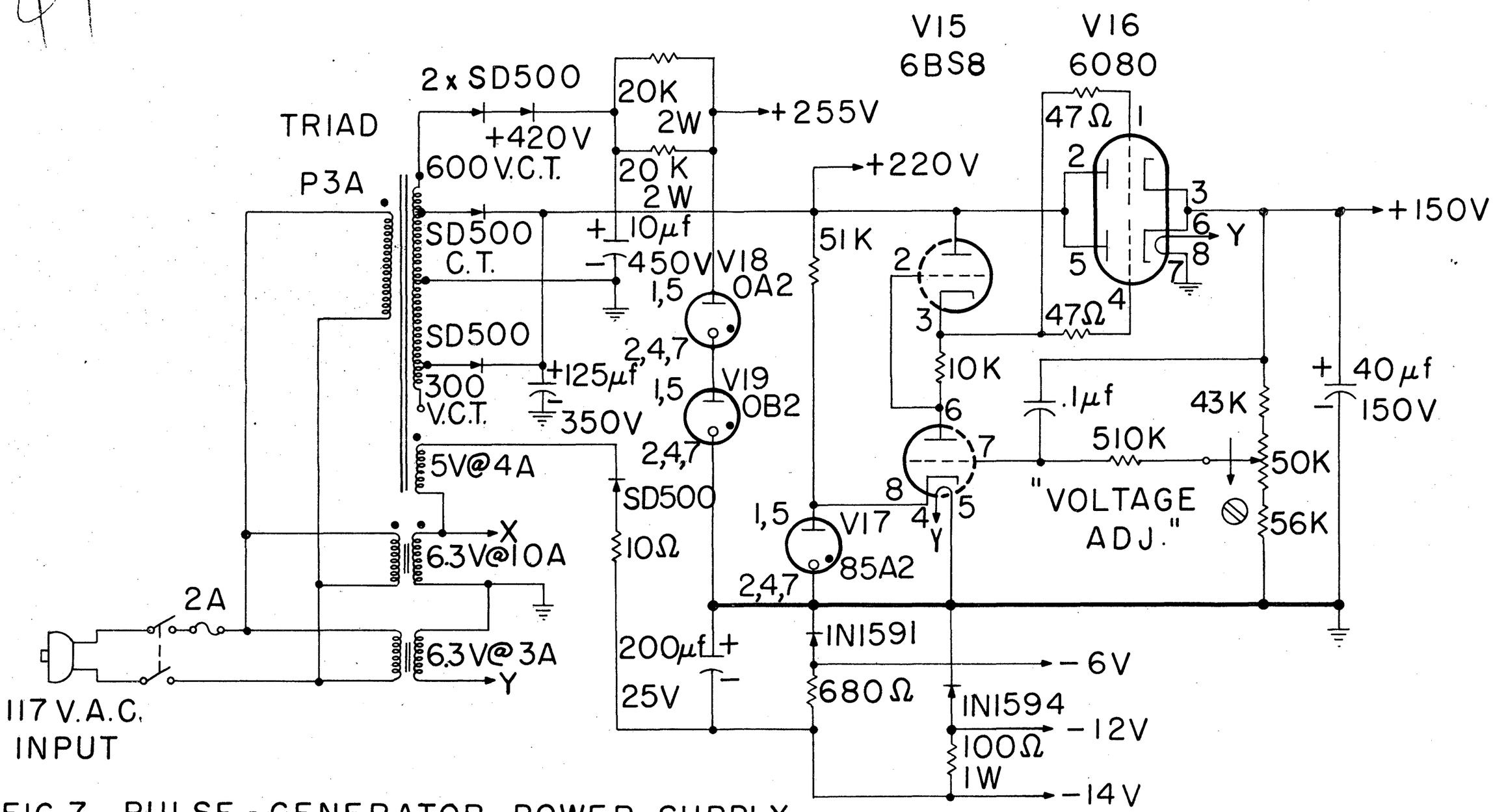

FIG. 7. PULSE - GENERATOR POWER SUPPLY

UCRL 8588

Fig. 7.

55162-2

NANOSECOND
PULSE GENERATOR
DC ON
OFF
AC ON
OFF
GATED
UNGATED
AMPLITUDE
FREQUENCY
SINGLE
PULSE
OUTPUTS
GATE
INPUT
POS TRIG
OUTPUT
EXT DRIVE
INPUT

Fig. 8