UCRL-8640

UNIVERSITY OF CALIFORNIA

Ernest O. Lawrence Radiation Laboratory

TWO-WEEK LOAN COPY

This is a Library Circulating Copy which may be borrowed for two weeks. For a personal retention copy, call Tech. Info. Division, Ext. 5545

BERKELEY, CALIFORNIA

DISCLAIMER

This document was prepared as an account of work sponsored by the United States Government. While this document is believed to contain correct information, neither the United States Government nor any agency thereof, nor the Regents of the University of California, nor any of their employees, makes any warranty, express or implied, or assumes any legal responsibility for the accuracy, completeness, or usefulness of any information, apparatus, product, or process disclosed, or represents that its use would not infringe privately owned rights. Reference herein to any specific commercial product, process, or service by its trade name, trademark, manufacturer, or otherwise, does not necessarily constitute or imply its endorsement, recommendation, or favoring by the United States Government or any agency thereof, or the Regents of the University of California. The views and opinions of authors expressed herein do not necessarily state or reflect those of the United States Government or any agency thereof or the Regents of the University of California.

UCRL-8640

Lawrence Radiation Laboratory
Berkeley, California

Contract No. W-7405-eng-48

SCINTILLATION AND POSITRON CAMERAS

Hal O. Anger

August 12, 1959

Printed for the U. S. Atomic Energy Commission

SCINTILLATION AND POSITRON CAMERAS

Hal O. Anger

Lawrence Radiation Laboratory and
Donner Laboratory of Biophysics and Medical Physics
University of California, Berkeley, California

August 12, 1959

ABSTRACT

A short description is given of earlier forms of the gamma-ray camera. The principle of operation of the scintillation camera is then reviewed. In the latter, the location of each scintillation occurring in a flat, thallium-activated, sodium iodide crystal is determined from the relative amounts of light picked up by a number of phototubes simultaneously viewing the crystal. The signals from the phototubes are fed to a circuit that computes the location of the scintillation from the pulse heights obtained and reproduces it on a cathode-ray-tube screen. There it is photographed by a conventional camera, and after a sufficient number of scintillations are recorded, an image of the distribution of activity in the subject is shown.

The positron camera is a new instrument that produces relatively sharp pictures of subjects containing positron emitters. It requires no pinhole aperture or other collimator. In one version of this instrument, the image crystal of the scintillation camera is placed on one side of the subject, and a scintillation counter is placed a distance away on the other side. A coincidence circuit detects those gamma-ray pairs that produce scintillations in both crystals and reproduces them as flashes on the cathode-ray-tube screen. All other scintillations in the image crystal are rejected. The scintillation counter is thus the focal point of all the gamma-ray pairs shown and an image of the distribution of activity in the subject is produced.

A twin-crystal positron camera that employs two identical image crystals and phototube assemblies, a coincidence circuit, and a more complex computing circuit is also described. It will allow sharper resolution of areas deep within the subject.

SCINTILLATION AND POSITRON CAMERAS

Hal O. Anger

Lawrence Radiation Laboratory and
Donner Laboratory of Biophysics and Medical Physics
University of California, Berkeley, California

August 12, 1959

INTRODUCTION

The pinhole-camera principle was first used to visualize a source of ionizing radiation in 1896. At this time Roentgen obtained a projected image of the anode of one of his x-ray tubes by means of a hole in a sheet of metal and a photographic plate.

A pinhole camera for gamma-ray-emitting subjects was reported in the literature in 1949 by Copeland and Benjamin.[1] A lead shield was provided with a 0.1-mm-diam. pinhole through which an image of the source was projected. It was designed to be used with very small subjects such as microscope slides. Ordinary x-ray film was used to record the image The subject was placed inside the shield and the x-ray film was placed outside. They obtained a picture of a 6-millicurie radium needle with an exposure time of 24 hr. The sensitivity was quite low, and no application to any biological or medical tracer problems was reported.

In 1952 the author built a gamma-ray camera of somewhat improved sensitivity.[2] It employed a large flat crystal of sodium iodide to convert the gamma rays to light. This in turn exposed a blue-sensitive photographic plate in close proximity to the sodium iodide crystal. The crystal was thus used as an intensifying screen. The camera body was lead and the pinhole aperture was 1/8-in. in diameter. The sodium iodide crystal was 5/16 in. thick, and the photographic plate was separated from the crystal by a 1/16-in.-thick window. Spreading of the light emitted by the crystal was limited by

the inverse-square law and by total reflection within the crystal. A black backing was provided in the crystal mount to absorb totally reflected light. The sensitivity of the camera was measured by taking pictures of bottles of I^{131}, and it was found that with a 1-hr exposure a concentration of 1 millicuries/cm^2 was needed to obtain a faint but useable image. The camera was put to clinical use on only one occasion when a thyroid carcinoma patient with an active metastatic lesion at his elbow was given a therapeutic dose of 100 millicuries of I^{131}. The lesion contained about 20 millicuries. An image of the lesion was obtained with a 1-hr exposure.

The sensitivity of the above camera was still very low. It was then decided that image amplification would be used as a means of improving the sensitivity.[3] An image-amplifier tube was obtained from Philips Research Laboratories in the Netherlands. It was a single-stage tube with a 5-in. diam. photocathode and an electron lens which produced an intensified image on a fluorescent screen. It was similar to the tubes being used for fluoroscopic-x-ray image intensification except that the x-ray-sensitive fluorescent screen was absent. In its place, next to the photocathode was a mosaic of 241 small thallium-activated sodium iodide crystals which converted the gamma-ray image to a light image. Each crystal was 1/4-in. in diameter by 1/2 in. long and was contained in a separate white-painted cell in an aluminum holder. The gain of the image amplifier was about 600, but the sensitivity was limited by a background glow caused by bombardment of the photocathode by cesium ions.

The sensitivity was such that sources of I^{131} containing 200 $\mu C/cm^2$ could be seen visually on the fluorescent screen. A picture was taken of a test object containing 25 millicuries of I^{131}. The exposure time was 8 min. with a 1/4-in. diam. pinhole aperture. Very little gain in over-all sensitivity was obtained, because much of the light was lost between the image-amplifier

tube and the photographic film. Better results could undoubtedly have been obtained with a faster lens system. Kellershohn and Pellerin have constructed a similar device.[4]

SCINTILLATION CAMERA

In this instrument a pinhole aperture is situated in a lead camera body so that it projects a gamma-ray image of the subject on a large, flat, sodium iodide crystal.[5] The crystal is viewed by seven photomultiplier tubes arranged with six of the tubes in a circle and the seventh in the center. The tubes are spaced about an inch above the crystal. When a scintillation occurs, the light divides among the phototubes in ratios depending on the location of the scintillation in the crystal. Each phototube gives a pulse proportional to the amount of light it receives. The pulses from the phototubes are combined as described later, and the resulting signals deflect the beam of a cathode-ray tube to a point corresponding to the location of the scintillation in the crystal. At this time, the cathode-ray beam is turned on momentarily, and the scintillation is reproduced as a flash on the cathode-ray-tube screen. A pulse-height selector is provided to reject scintillations not falling within a certain brightness range. This range usually corresponds to the photopeak of the pulse-height spectrum of the isotope used. The flashes on the oscilloscope are integrated by time exposure of a photographic film, and an image of the distribution of activity in the subject is obtained. Usually a Polaroid Land camera with film requiring a 1-min. developing time is used to record the image. This scintillation camera has a number of advantages. There is no line structure to the image, since scanning is not employed. It is concurrently sensitive to all parts of its field of view, and thus it can show the distribution of isotopes with very short half lives. An area of

nearly any size may be examined by moving the camera closer or farther away. It can be oriented in any direction, so that horizontal, vertical, and oblique views can be taken. Remote viewing and recording are quite feasible. When isotopes are used that emit a single gamma ray or a principal gamma ray without a large number of higher-energy gamma rays, scattered radiation is rejected by the pulse-height selector whether it occurs in the subject or in the camera body, since it will have been degraded in energy before it reaches the crystal.

A sectional view of the camera is shown in Fig. 1. The camera housing is lead and the pinhole aperture is tungsten or platinum for high stopping power at the edges of the aperture. Above the aperture is the thallium-activated sodium iodide crystal, which is 4 in. in diameter and 1/4 in. thick. It is a single solid crystal backed with magnesium oxide to reflect maximum light. About an inch above the crystal is the bank of seven 1-1/2-in.-diam. photomultiplier tubes. The tubes are a minimum distance apart and the areas between the photocathodes are covered by white reflecting surfaces. The outermost reflecting surface near the edge of the crystal is polished aluminum. The space between the crystal and the phototubes is filled with mineral oil for better optical coupling between the crystal and phototubes.

A block diagram of the electronic circuit is shown in Fig. 2. Pulse signals which indicate the position of the scintillation along the X and Y axes of the crystal are obtained by adding signals $P_1 P_2$, etc. from the phototubes in the following way:

$$X = 1/2\ P_3 + P_4 + 1/2 P_5 - 1/2\ P_6 - P_1 - 1/2\ P_2 \tag{1}$$

$$Y = P_2 + P_3 - P_5 - P_6\ . \tag{2}$$

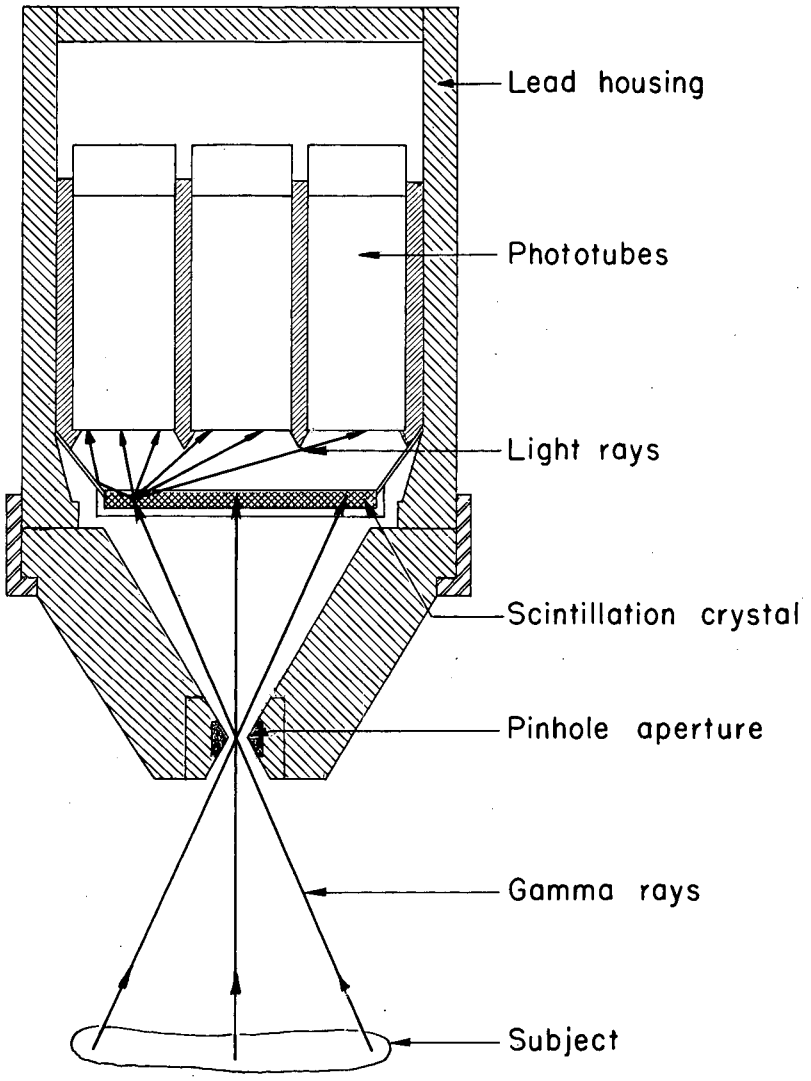

Fig. 1. Section view of scintillation camera.

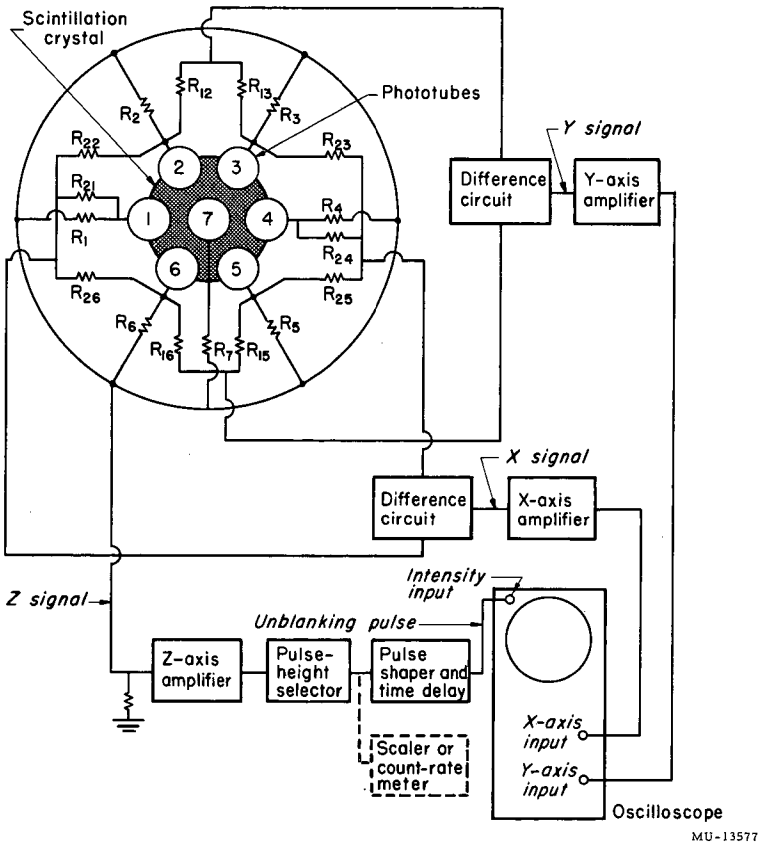

Fig. 2. Block diagram of scintillation camera.

These signals are applied to the X and Y input terminals of the oscilloscope. A third signal, the Z signal, is obtained by adding the phototube signals as follows:

$$Z = P_1+P_2+P_3+P_4+P_5+P_6+P_7 \quad . \tag{3}$$

The Z signal is amplified and fed to the input of the pulse-height selector. The output of the pulse-height selector goes to a shaper and delay circuit, which shortens the pulses and delays them so that they coincide with the peaks of the X and Y positioning signals. The shortened pulses are then applied to the intensity input of the cathode-ray oscilloscope. They turn on the beam momentarily and reproduce the scintillations that occur in the crystal.

When the subject contains I^{131}, approximately 40% of the scintillations occurring in the crystal are caused by photoelectric recoils of the 0.36-Mev gamma ray of I^{131}. These scintillations comprise the 0.36-Mev photopeak in the pulse-height spectrum. The pulse-height selector is adjusted to accept only these pulses. Then scattered radiation is rejected, since it will have been reduced in energy and will not pass the pulse-height selector. It is then possible to obtain the X and Y coordinates of the scintillations by simple addition and subtraction of pulse heights as shown in Eqs. (1) and (2).

For the camera to operate as described above, the sensitivity of all the phototubes must be approximately equal. In order to meet this condition, the entire crystal is irradiated with gamma rays, and the voltage on each tube is adjusted by means of a variable resistor until the pattern on the oscilloscope is symmetrical and the flashes are as evenly distributed as possible. Then pulses from photopeak scintillations pass through the pulse-height selector regardless of where the scintillations occur in the crystal. The camera can be adjusted to accept gamma rays of different energies by varying the phototube supply voltage.

SENSITIVITY AND RESOLUTION

The inherent resolution and linearity of the crystal and phototube combination were determined experimentally in the following way. Fifteen gamma-ray beams, each about 1/8-in. in diameter, were directed at the crystal from holes in a block of lead, as shown in Fig. 3. The sources in the central part of the pattern were 1/2 in. apart and the others were 1 in. A picture of the resulting pattern is shown in Fig. 4. Each source appears to be about 1/4 in. in diameter referred to the crystal.

The resolution of the complete camera, including the pinhole aperture, is shown in Fig. 5. Pictures taken through pinhole apertures of various sizes are shown. The source of gamma rays in this case is a pattern of 1/4-in.-diam sources of I^{131}. The spacing between sources is 2 in., and the pattern was 10 in. away from the camera. The four pictures were taken with 1/4-, 3/16-, 1/8-, and 1/16-inch apertures.

The effect of exposure time and subject activity on the quality of the pictures is shown in Fig. 6. The two pictures on the left were taken of a thyroid phantom containing 6.7μc of I^{131}. A 1/4-in. aperture was used, and exposure times were 7 min for the upper picture and 24 min for the lower picture. The two pictures on the right are of the same phantom except that it contained 30μc. The aperture size was 1/8 in., and the exposure times were 9 and 35 min. The resolution is somewhat better than that obtained a year ago. The improvement is partly due to the use of a plastic bonding material with higher refractive index between the crystal and the glass face plate of the crystal container. Formerly silicone fluid, which has a low refractive index, was used. The new material closely matches the refractive index of glass and permits more light to escape directly from the crystal without total reflection.

The geometric resolution, R, of the camera can be calculated from

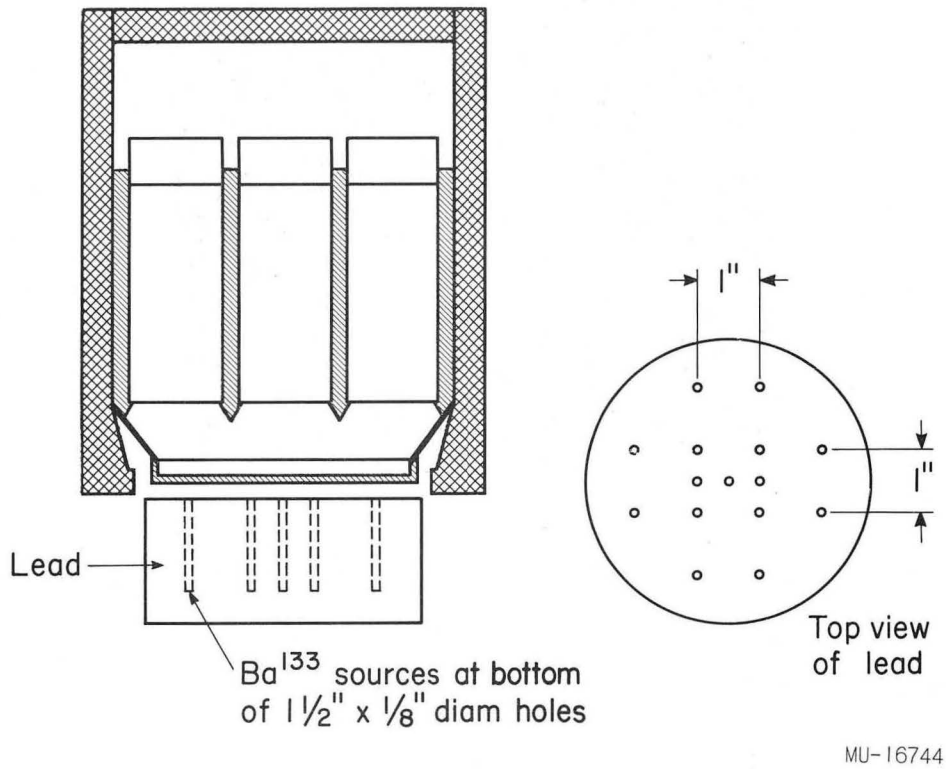

Fig. 3. Lead block with Ba^{133} sources for testing resolution and linearity of image crystal.

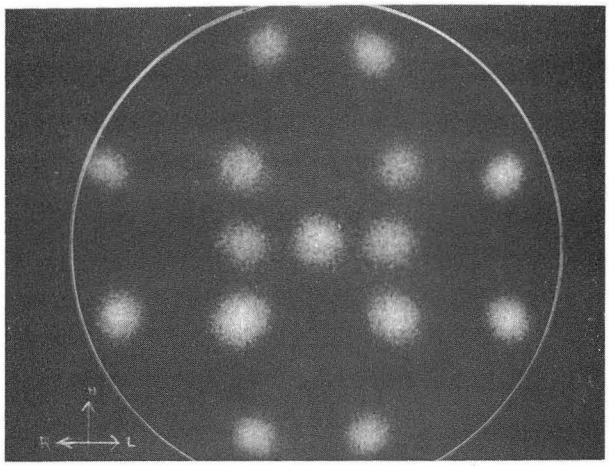

ZN-2205

Fig. 4. Picture taken with Ba^{133} sources in lead block.

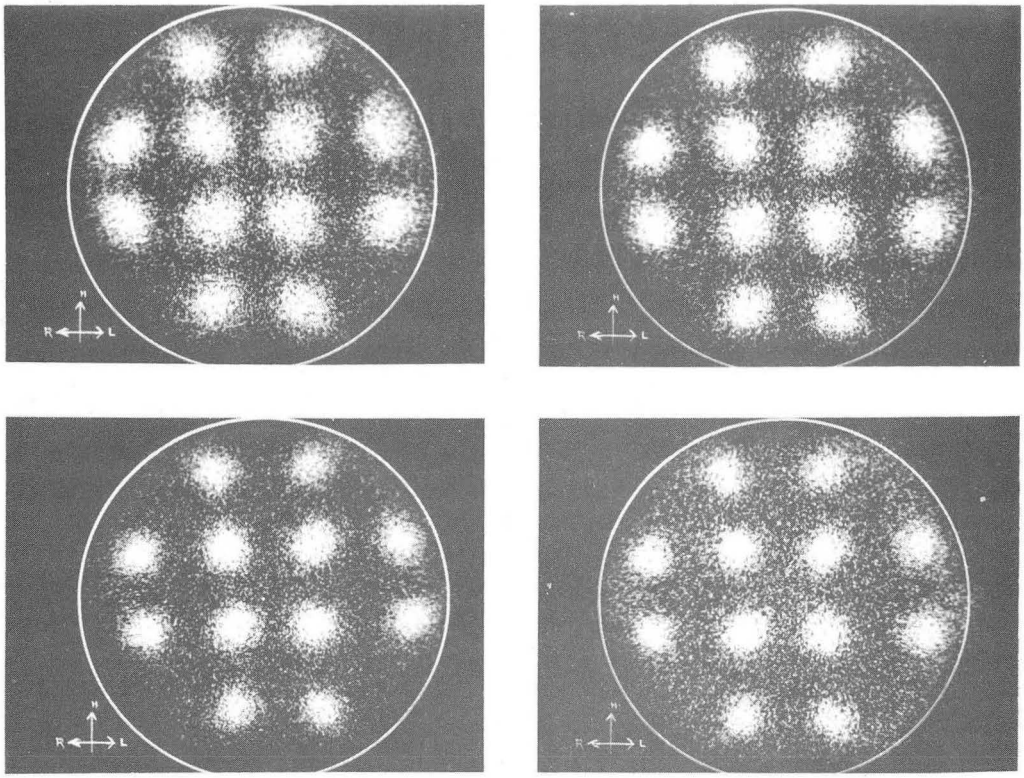

ZN-2208

Fig. 5. Pictures of I^{131} sources taken with camera with 1/4-, 3/16-, 1/8-, and 1/16-in.-diam. apertures.

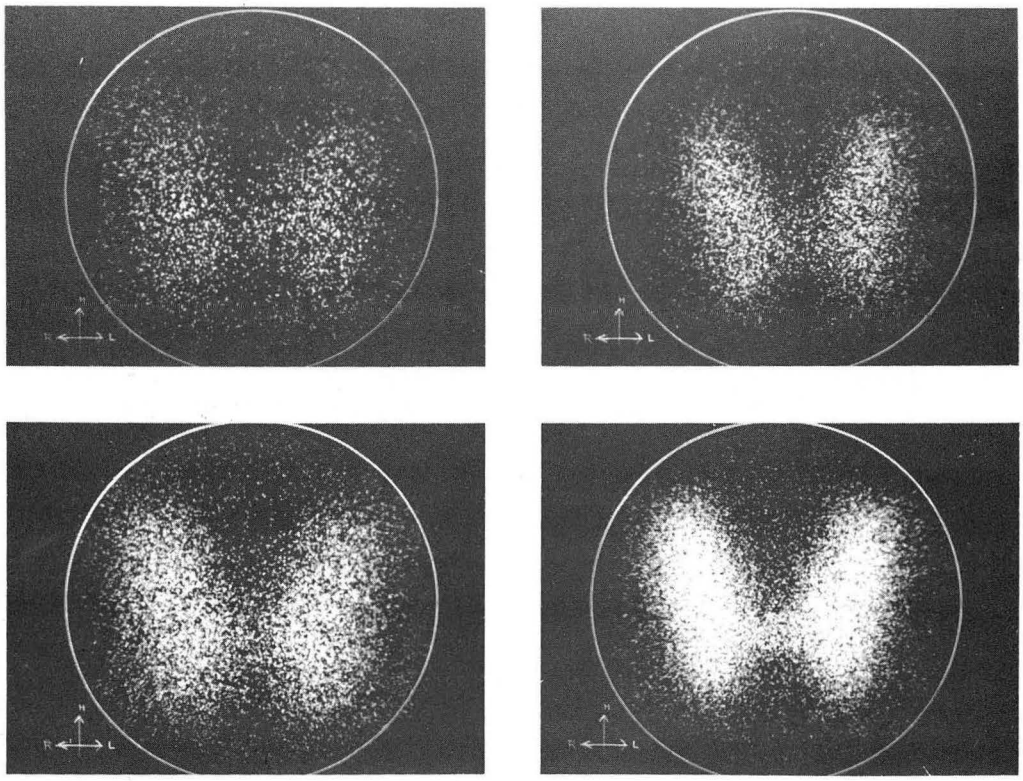

ZN-2207

Fig. 6. Pictures of thyroid phantom containing I^{131}.

$$R = \frac{(a + b)\, d}{a}, \tag{4}$$

where a is the distance from the image crystal to the aperture, b is the distance from the subject to the aperture, and d is the aperture diameter (see Fig. 7). This formula gives the distance between two point sources in the subject that are imaged at the crystal as two discs that are tangent. It does not include the resolution losses between the crystal and the oscilloscope discussed below. Since some gamma rays go through the edge of the aperture, the diameter d is measured where half of the gamma rays are stopped by the aperture edge. For I^{131} gamma rays, the effective diameter for platinum is 0.8mm greater than the actual diameter, and it is 1 mm greater for tungsten when the included angle of the aperture is 120 deg.

The other causes of definition loss, in addition to the finite size of the pinhole aperture, are (1) statistical fluctuations in the X and Y positioning signals and (2) multiple gamma ray recoils in the crystal. With regard to (1), some resolution loss occurs because an average of only 40 to 50 photoelectrons are released from each phototube by scintillations from gamma rays of I^{131}. This number is, of course, subject to statistical fluctuations and produces an uncertainty in placement of the flashes on the oscilloscope screen.

The second cause of definition loss is the Compton recoils that sometimes produce secondary gamma-ray recoils in the crystal. When a Compton recoil occurs, a weak scintillation and a secondary gamma ray are produced. The secondary gamma ray may travel a short distance in the crystal and produce a second scintillation. The total amount of light produced is then the same as that produced if all the energy of the gamma ray were spent

in a single recoil. Therefore the resulting signal passes the pulse-height selector, and a flash appears on the cathode-ray tube. The flash is located part way between the points that represent the two scintillations. The average distance a secondary gamma ray from I^{131} travels in the crystal is about 6mm, and the resulting flashes are misplaced an average distance equivalent to 3 or 4mm in the crystal. Most secondary gamma rays escape the crystal without producing secondary recoils, however, and the scintillations produced by the initial recoil are rejected by the pulse-height selector.

The sensitivity, S, of the camera can be calculated from

$$S = \frac{d^2}{16\ b^2}\ f. \tag{5}$$

The sensitivity is given in terms of the number of gamma rays recorded in the final picture divided by the number of gamma rays emitted by the subject. The factor, f, is the crystal efficiency which is equal to the number of gamma rays producing pulses which pass the pulse height selector divided by the number of gamma rays impinging on the crystal. This factor is about 0.1 for gamma rays from I^{131} and a 1/4-in. -thick sodium iodide crystal.

From Eq. (5) it can be seen that the sensitivity varies as the square of the distance between the camera aperture and the subject. Thus the camera is most sensitive to small subjects, such as the thyroid, since the camera can be close and still give adequate coverage of the subject.

Table I gives typical values for the sensitivity and resolution as parameters of the camera are changed. The first column gives the resolution and sensitivity of the present camera with a 1/8-in. aperture. The second column shows the improved resolution that will be obtained if a, the distance from the pinhole aperture to the crystal, is increased. When a is increased,

the resolution improves while the sensitivity remains unchanged. Alternatively, the sensitivity can be increased, as shown in the third column, by increasing the value of a and increasing the aperture size slightly while the resolution remains unchanged.

The source strength required in a subject that is to be represented by a given number of dots N on the picture is equal to

$$G = \frac{N}{3.7 \times 10^4 \ StA} , \tag{6}$$

where G is the source strength in microcuries, S is the sensitivity given in Eq. (5), t is the exposure time in seconds, and A is the abundance of the gamma ray in number emitted per disintegration.

The scintillation camera has been used for the past 2 yr to take pictures of the thyroid glands of over a hundred patients. The amount of I^{131} required in the thyroid gland is 5 to 20 μC. Pictures containing 3200 or 6400 dots are taken during an exposure time of 7 to 15 min using a 1/4-in.-diam. aperture, a 1/4-in.-thick crystal, and a distance of 4 in. between the aperture and the subject. The clinical results will be published in a separate paper.

Table I

Sensitivity and resolution of scintillation camera as parameters are varied

a (in.)	4	8	8
b (in.)	4	4	4
d (in.)	0.125	0.125	0.167
f	0.1	0.1	0.1
Geometric resolution (in.)	0.25	0.187	0.25
Sensitivity	6×10^{-6}	6×10^{-6}	11×10^{-6}

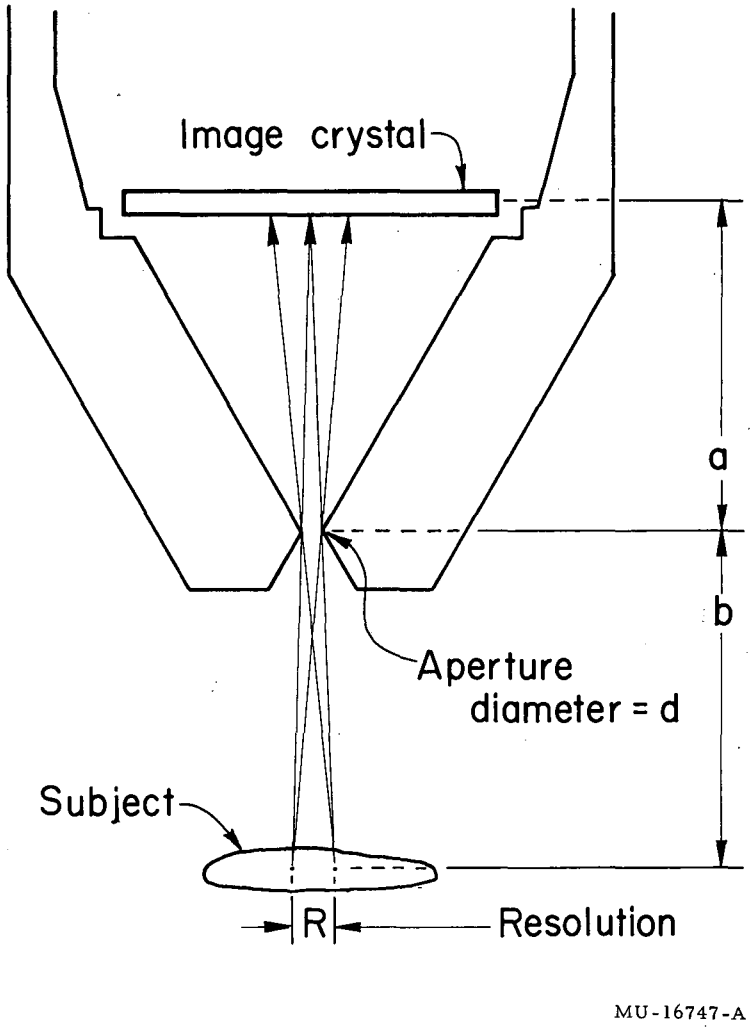

Fig. 7. Geometric parameters of scintillation camera.

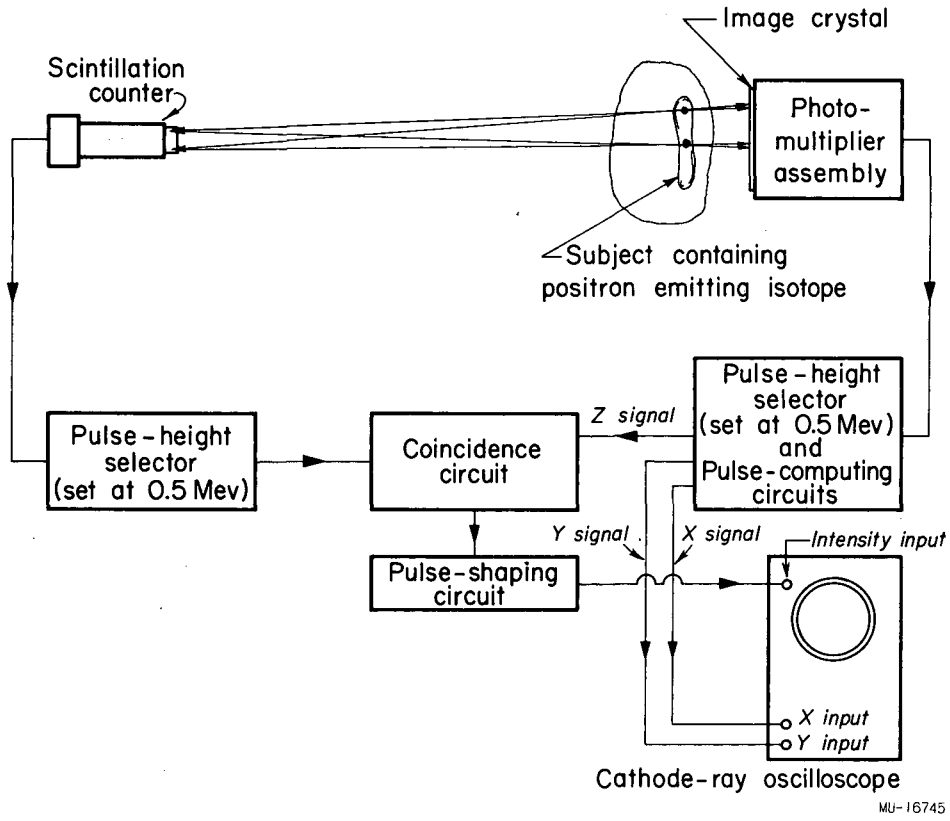

Fig. 8. Block diagram of single-crystal positron camera.

SINGLE-CRYSTAL POSITRON CAMERA

It became apparent a short time after the scintillation camera was built that the imaging crystal used in the scintillation camera would have unique advantages when used with positron emitters, and that sharp images of positron-emitting subjects could be obtained without the use of a pinhole aperture or other collimator.

Figure 8 shows a camera for positron-emitting isotopes which is now in operation. This instrument is called a Single Crystal Positron Camera. It consists in part of the crystal and phototube assembly, computing circuit, and cathode-ray oscilloscope identical to the one described for the scintillation camera. Additional components are a scintillation counter, a second pulse-height selector, and a coincidence circuit.

The image crystal is placed on one side of the subject, and the scintillation counter is placed on the opposite side and a distance away. When a positron is annihilated in the subject, two gamma rays of 0.51-Mev energy are produced which travel in approximately opposite directions. When one of the gamma rays produces a count in the scintillation counter, the other gamma ray impinges on the image crystal at a given point. When a scintillation is produced in each crystal, the pulses produced actuate the coincidence circuit, and a flash corresponding to the location of the scintillation in the image crystal is displayed on the cathode-ray tube. All other scintillations occurring in the image crystal are rejected.

Thus the coincidence circuit selects from the many scintillations occurring in the crystal those scintillations that form an image of the distribution of activity in the subject. The scintillation counter is a point of focus of the gamma-ray pairs that form the image. Gamma rays that have been scattered appreciably by Compton scattering are rejected by the pulse-height selectors.

Figure 9 shows a picture obtained with this instrument. The subject consisted of 12 small sources of Na^{22}, a long-lived positron emitter. Each source contained 1/12 μC of activity. The exposure time was 15 min and the subject was about 1 in. away from the image crystal.

The background seen in this picture is due to a 1.3-Mev gamma ray which is coincident with the positron emission. A few of these are degraded in energy before entering the crystals, or they produce Compton recoils in one of the crystals and pass through the pulse-height selectors. They cause flashes to appear at random points on the picture. This does not occur with pure positron emitters, such as carbon-11, or those which emit a gamma ray of less than 1/2 Mev, such as arsenic-74, or those which emit gamma rays which are not in coincidence with the positron. The background due to cosmic rays and ordinary room background is essentially zero, less than 1 count per hr.

The geometric resolution, R, of the single-crystal positron camera can be calculated from

$$R = \frac{ad}{a+b}, \qquad (7)$$

where a is the distance from the image crystal to the subject, b is the distance from the subject to the scintillation counter, and d is the diameter of the crystal in the scintillation counter (see Fig. 10).

The geometric resolution, R, in this formula is defined as the distance between two point sources in the subject that are imaged at the image crystal as two discs that are tangent. The formula does not include (1) the losses between the crystal and the oscilloscope discussed previously and (2) losses due to the distance the positron travels in the subject before it decays into a gamma-ray pair. The latter is a characteristic property of

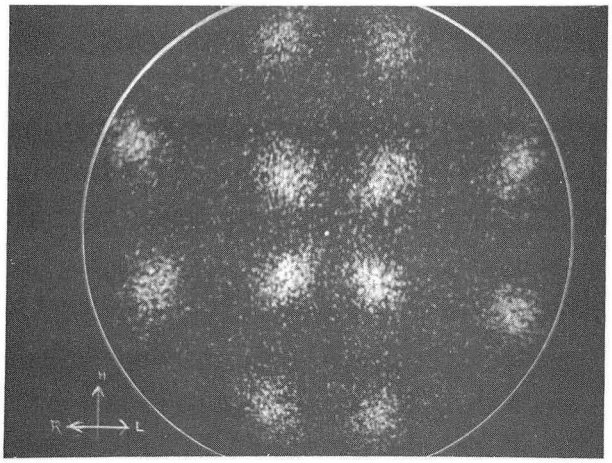

ZN-2206

Fig. 9. Picture taken with single-crystal positron camera.

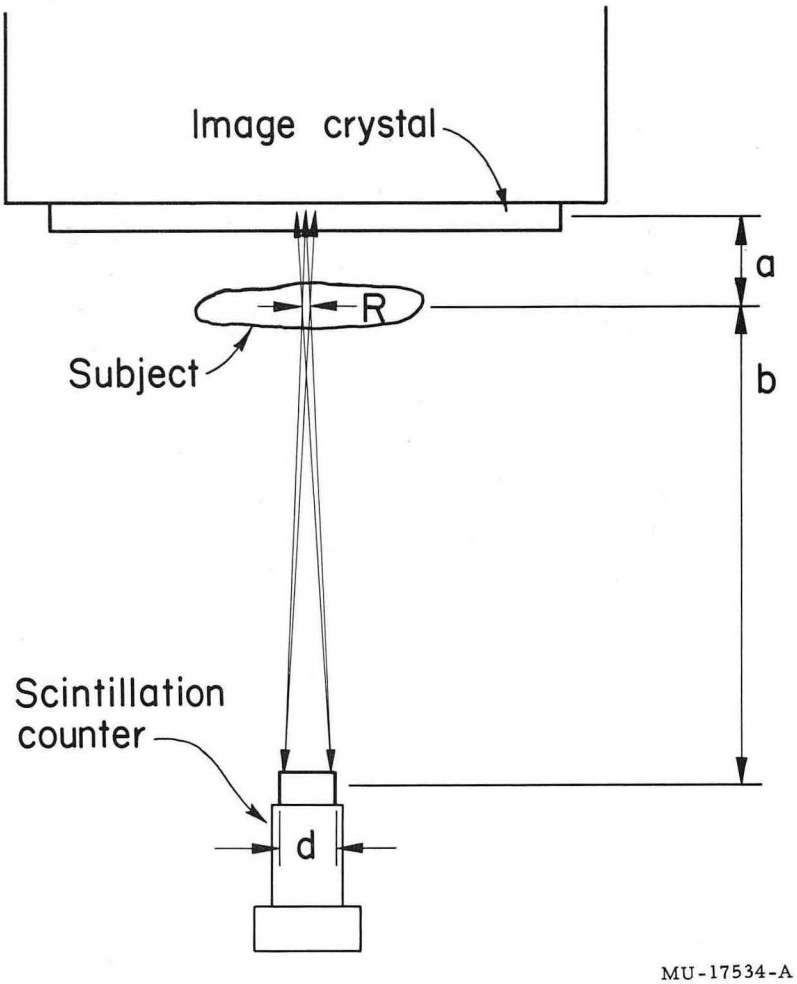

Fig. 10. Geometric parameters of single-crystal positron camera.

Table II

Sensitivity and geometric resolution of single-crystal positron camera under typical conditions

a (in.)	2	1	1	7
b (in.)	14	14	7	48
d (in.)	2	2	2	2
f_1	0.1	0.1	0.1	0.1
f_2	0.6	0.6	0.6	0.6
Geometric resolution (in.)	0.25	0.125	0.25	0.25
Sensitivity	75×10^{-6}	75×10^{-6}	300×10^{-6}	6×10^{-6}

positron cameras and scanners and causes an unavoidable loss in definition, since the camera shows the point of origin of the gamma ray pair rather than the point of origin of the positron. The positron may travel several millimeters in tissue if its energy is high, but only on the order of a millimeter or less if the energy is below 1/2 Mev.

The sensitivity, S, can be calculated from

$$S = \frac{d^2}{16\ b^2} \cdot f_1 f_2 \ . \tag{8}$$

The sensitivity is defined as the number of gamma-ray pairs recorded on the picture divided by the number emitted by the subject. The factor f_1 is the ratio of the number of pulses that pass the pulse-height selector to the number of gamma rays that are incident on the image crystal. The factor f_2 is the same factor for the scintillation counter.

The sensitivity and geometric resolution under typical conditions are given in Table II. In general, the closer the subject to the image crystal, the sharper the image will be. The closer the scintillation counter to the subject, the higher the sensitivity, but the poorer the definition. If the subject is thin and can be placed close to the image crystal, very sharp pictures can be obtained at high sensitivity. For example, if the subject is 2 in. away from the image crystal and the scintillation counter is placed so that the resolution is 1/4 in. the sensitivity is 10 times as high as it would be with the pinhole camera when the same resolution and subject coverage is required. If the subject can be placed 1 in. from the image crystal instead of 2 in., the resolution becomes 1/8 in., and the sensitivity is unchanged. If the subject is relatively thick, as it would be when one is searching for brain lesions, and the most remote part of the subject is 7 in. from the crystal, the sensitivity is 6×10^{-6} when 1/4 in.-resolution is required

on the side of the subject farthest from the image crystal. Better resolution is obtained in the parts of the subject closer to the image crystal. This sensitivity is high compared to that which would be obtained from the pinhole camera or a gamma-ray scanner.

TWIN-CRYSTAL POSITRON CAMERA

A positron camera employing two image crystals is shown in Fig. 11. It has the unique property that those parts of the subject lying on a given plane between the two crystals are in sharpest focus. At the same time, the camera is sensitive to a large number of the gamma rays emitted. In addition to two image crystals and photomultiplier assemblies, the camera employs two pulse-height selectors, a more complicated computing circuit, a coincidence circuit, and the usual oscilloscope.

Assume that a positron decays at a point between the two crystals, and that one of the gamma rays intercepts the first crystal at a distance x_1 above the center of the crystal while the other gamma ray intercepts the second crystal at a distance x_2 below the center. Signals which indicate the point of origin of the gamma-ray pair are obtained by combining the signals from the two photomultiplier assemblies in the following manner. If the best resolution is required at a plane located at distance a from Crystal No. 1 and b from Crystal No. 2, the X and Y signals are obtained from

$$X = \frac{bX_1 + aX_2}{a + b} , \tag{9a}$$

and

$$Y = \frac{bY_1 + aY_2}{a + b} . \tag{9b}$$

where X_1, X_2, Y_1, and Y_2 are the signals that indicate the position of the scintillations in the crystals. They are obtained as described in Eq. (1) and (2). If the plane is midway between the two crystals, the formulas reduce to

$$X = \frac{X_1 + X_2}{2} , \tag{10a}$$

and

$$Y = \frac{Y_1 + Y_2}{2} . \tag{10b}$$

When gamma ray pairs originate at the plane of best definition, the resolution is not limited by geometrical factors, and the camera can be said to be in perfect focus at that plane. The resolution is limited only by (1) the losses between the crystal and the oscilloscope discussed previously, and (2) the distance the positron travels before it is transformed into a gamma-ray pair. The losses due to statistical variations are $\sqrt{2}$ times larger in the twin-crystal camera than in its single-crystal counterpart, since two image crystals and photomultiplier assemblies are employed.

When gamma-ray pairs originate from points that do not lie on the plane of best definition, there is less certainty about their point of origin, and the focus of the image produced is not as sharp. The geometric resolution of other planes between the two crystals is determined as follows. Referring to Fig. 12, assume that a positron decays at a point, p, a distance, c, away from the plane of best definition, and a distance, d, above the centerline between the two crystals. The gamma rays intercept the crystals at x_1 and x_2. Although the gamma-ray pair originates at p, it is displayed as if it originated at the point, q, where the gamma ray crosses the plane of best definition. The point, q, lies within a circle whose diameter depends on the maximum allowable angle, α, between the path of the displayed gamma-ray pairs and the center line between the two crystals. The diameter of the

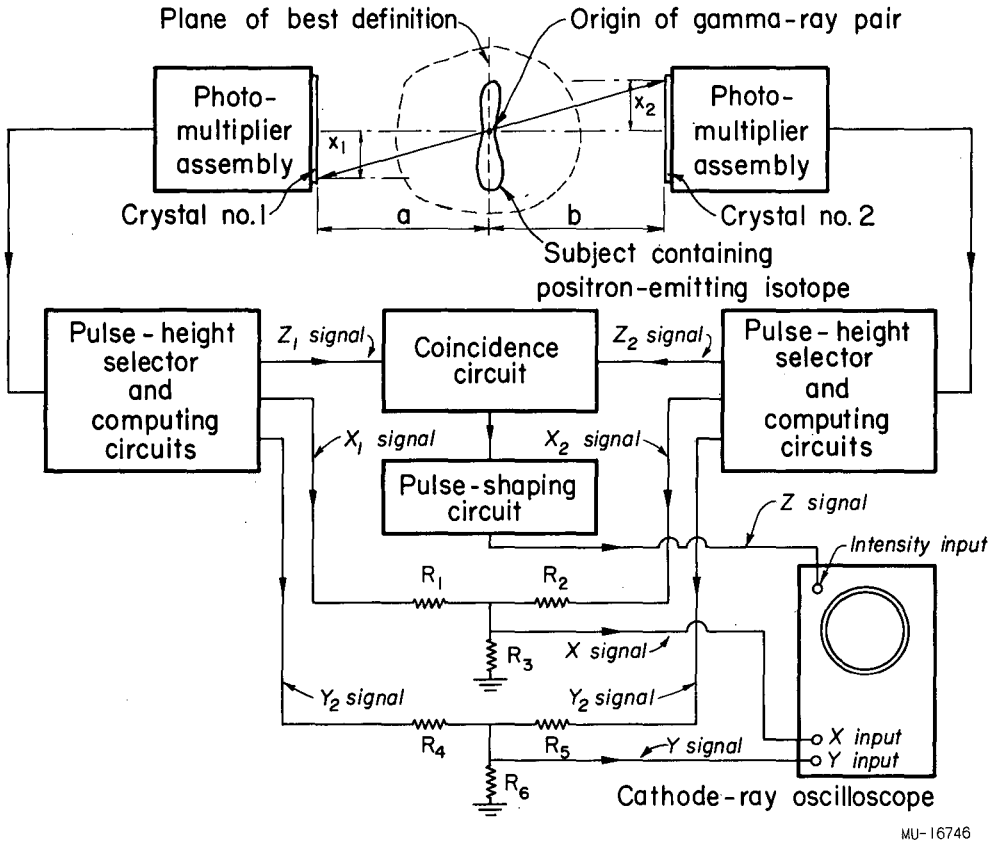

Fig. 11. Block diagram of twin-crystal positron camera.

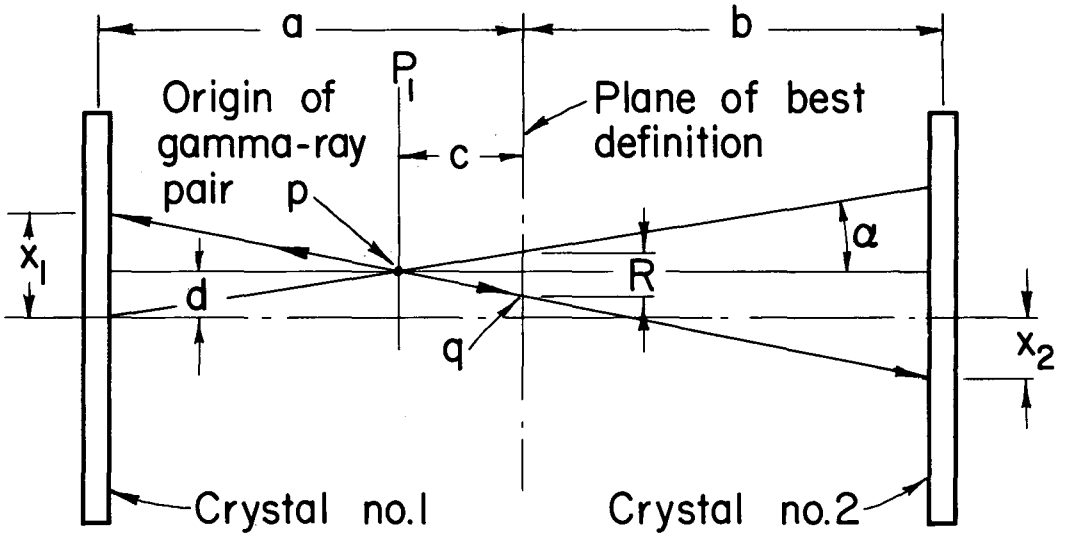

MU-16749-A

Fig. 12. Geometric parameters of twin-crystal positron camera.

Table III

Sensitivity and geometric resolution of the twin-crystal positron camera under typical conditions

c (in.)	1/2	1-1/2	3	1/2
f_1	0.1	0.1	0.1	0.1
f_2	0.1	0.1	0.1	0.1
α (deg)	14	4.8	2.4	7
Geometric resolution (in.)	0.25	0.25	0.25	0.125
Sensitivity	160×10^{-6}	17×10^{-6}	4.3×10^{-6}	40×10^{-6}

circle is equal to the geometric resolution, R, at the plane, P_1. The resolution at plane, P_1, can be made as good as desired by limiting the events displayed to those in which the gamma rays travel almost parallel to the center line between the two crystals. This reduces the sensitivity but increases the depth of focus. It is analogous to decreasing the aperture size of an optical lens, whereby increased depth of focus is obtained at the expense of the amount of light collected.

The geometric resolution, R, at the plane, P_1, is given by

$$R = \frac{2c\,(X_1 - X_2)}{a + b} = 2c \tan \alpha \,. \tag{11}$$

The symbols are as defined earlier in the text (see Fig. 12). The maximum allowable size of the angle α can be varied by varying the allowable difference between the quantities x_1 and x_2 displayed on the oscilloscope. Thus the position of the plane of best definition and the depth of focus of the camera can be controlled by varying parameters of the electronic computing circuit.

The sensitivity is equal to

$$S = \frac{R^2}{16\,c^2}\, f_1 f_2 = \frac{1}{4}\, f_1 f_2 \tan^2 \alpha \,, \tag{12}$$

where f_1 and f_2 are the fractions of gamma rays that pass the pulse-height selectors and are incident on crystals No. 1 and No. 2, respectively. The sensitivity is defined as the number of gamma rays pairs recorded on the picture divided by the number emitted from the subject. Absorption of gamma rays in the subject is neglected.

The sensitivity and resolution under typical conditions are given in Table III. If the subject is relatively thin, the sensitivity for a given

resolution can be quite high, even if the active volume is deeply buried within the subject. If the active volume is relatively large, the sensitivity must be lower, if good depth of focus is to be obtained, because the events recorded must be limited to those in which the angle α is small. When a large active volume is to be shown, the sensitivity and resolution is about the same as for the single-crystal positron camera. The twin-crystal camera is advantageous when the active areas are relatively thin but are deeply buried in the subject. Compared to the pinhole gamma-ray camera or to a scanner, either of the positron cameras offers a considerable advantage in sensitivity and resolution. Their disadvantages are their increased complexity and the limited availability of positron emitters.

AVAILABILITY OF POSITRON EMITTING ISOTOPES

A partial list of positron emitting isotopes with half lives on the order of an hour or more are given in Table IV. The list was compiled from the 1958 Table of Isotopes by Strominger, Hollander, and Seaborg.[6] All of the known positron emitters with half lives greater than 24 hr are included in the table.

Among the isotopes in the table are many of biological interest. Some of them have already been used in medical diagnosis. Brownell and Sweet have used arsenic-74 with coincidence scanning to locate brain tumors.[7] Aronow, Thors, and Brownell have used copper-64 to delineate the liver.[8] The same group has attempted to use zinc-62 to show the pancreas. We plan to investigate the use of these and other positron emitters in medical diagnosis and research.

Some of the positron emitting isotopes listed above are readily available at the present time. However, most must be made on a cyclotron since they require heavy charged particle or energetic neutron bombardment for their production. The availability of these isotopes will no doubt improve in the future, since high beam current cyclotrons for the production of isotopes are under construction at the present time.

Table IV

Positron-emitting isotopes

Element	Isotope	Half life	Max. β^+ energy (Mev)	Positron abundance (%)
*Aluminum	Al^{26}	8×10^5 yr	1.17	84
Antimony	Sb^{116}	1.0 hr	1.45	--
Arsenic	As^{70}	0.9 hr	1.35	100
*Arsenic	As^{71}	2.6 days	0.81	~30
*Arsenic	As^{72}	1.1 days	3.3	--
*Arsenic	As^{74}	17.5 days	1.53	29
Bromine	Br^{75}	1.6 hr	1.70	--
Bromine	Br^{76}	17.2 hr	3.57	--
*Bromine	Br^{77}	2.4 days	0.34	1
Cadmium	Cd^{105}	0.9 hr	1.69	--
Carbon	C^{11}	0.34 hr	0.97	99
Cerium	Ce^{133}	6.3 hr	1.3	--
Cesium	Cs^{127}	6.3 hr	0.68	3
Cesium	Cs^{130}	0.5 hr	1.97	--
Chlorine	Cl^{34m}	0.53 hr	4.5	50
Chromium	Cr^{47}	0.7 hr	1.54	100
Cobalt	Co^{55}	18.2 hr	1.50	~60
*Cobalt	Co^{56}	77.3 days	1.5	20
*Cobalt	Co^{58}	71 days	0.47	15
Copper	Cu^{64}	12.8 hr	0.66	19
Erbium	Er^{161}	3.1 hr	1.2	--
Fluorine	F^{18}	1.9 hr	0.65	97

Table IV (continued)

Element	Isotope	Half life	Max. β^+ energy (Mev)	Positron abundance (%)
Gallium	Ga^{68}	1.1 hr	1.9	85
Germanium	Ge^{67}	0.35 hr	2.9	--
*Germanium	Ge^{69}	1.7 days	1.2	33
*Gold	Au^{194}	1.7 days	1.2	~ 3
Indium	In^{109}	4.3 hr	0.8	6
Iodine	I^{121}	2.0 hr	1.2	100
*Iodine	I^{124}	4.5 days	2.20	~ 30
*Iodine	I^{126}	13.3 days	1.11	1.3
Iridium	Ir^{190}	3.2 hr	2.0	10
Iron	Fe^{52}	8.3 hr	0.8	~ 57
Krypton	Kr^{77}	1.1 hr	1.86	~ 80
*Krypton	Kr^{79}	1.4 days	0.60	5
Lanthanum	La^{132}	4.5 hr	3.8	--
*Magnesium	Mg^{52}	5.6 days	0.58	35
Manganese	Mn^{51}	0.75 hr	2.16	100
Mercury	Hg^{192}	5.7 hr	1.18	--
Molybdenum	Mo^{90}	5.7 hr	1.2	--
Neodymium	Nd^{141}	2.4 hr	0.7	1.9
*Nickel	Ni^{57}	1.5 days	0.85	50
Nitrogen	N^{13}	0.17 hr	1.19	100
Palladium	Pd^{99}	0.36 hr	2.0	--
Palladium	Pd^{101}	8.5 hr	0.58	4
Praseodymium	Pr^{139}	4.5 hr	1.0	~ 6
*Rhodium	Rh^{102}	210 days	1.24	~ 7.5

Table IV (continued)

Element	Isotope	Half life	Max. β^+ energy (Mev)	Positron abundance (%)
Rubidium	Rb^{81}	4.7 hr	0.33	13
*Rubidium	Rb^{84}	33 days	1.6	19
Ruthenium	Ru^{95}	1.6 hr	1.1	--
Scandium	Sc^{43}	3.9 hr	1.2	100
Selenium	Se^{73}	7.1 hr	1.7	--
Silver	Ag^{103}	1.1 hr	1.3	--
Silver	Ag^{104}	0.5 hr	2.7	--
*Sodium	Na^{22}	2.6 yr	0.54	89
*Strontium	Sr^{83}	1.4 days	1.15	--
Technetium	Tc^{93}	2.7 hr	0.8	12
Technetium	Tc^{94}	0.9 hr	2.41	~ 75
Tin	Sn^{111}	0.6 hr	1.51	29
Titanium	Ti^{45}	3.1 hr	1.0	--
Vanadium	V^{47}	0.52 hr	1.89	100
*Vanadium	V^{48}	16 days	0.69	56
Xenon	Xe^{123}	2.1 hr	1.7	--
Zinc	Zn^{62}	9.3 hr	0.66	~ 10
*Zinc	Zn^{65}	254 days	0.32	1.5
*Zironium	Zr^{98}	3.3 days	0.91	25

*Half life longer than 24 hours.

BIBLIOGRAPHY

1. D. W. Copeland and E. W. Benjamin, Pinhole Camera for Gamma-Ray Sources, Nucleonics 5, No. 2, 44 (1949).

2. Hal O. Anger, Use of a Gamma-Ray Pinhole Camera for in-vivo Studies, Nature 170, 200 (1952).

3. Mortimer, Anger, and Tobias, The Gamma-Ray Pinhole Camera and Image Amplifier, UCRL-2524, March, 1954.

4. C. Kellershohn and P. Pellerin, Sur la Possibilite d'Utiliser un Tube Amplificateur d'Image, Compt. rend. soc. biol. 149, 533 (1955).

5. Hal O. Anger, Scintillation Camera, Rev. Sci. Instr. 29, No. 1, 27-33 (1958).

6. Strominger, Hollander, and Seaborg, Table of Isotopes, Revs. Modern Phys. 30, No. 2, Part 2, (1958).

7. G. L. Brownell and W. H. Sweet, Scanning of Positron-Emitting Isotopes in Diagnosis of Intercranial and Other Lesions, Acta Radiologica 46, 525 (1956), and Localization of Brain Tumors with Positron Emitters, Nucleonics 11, No. 11, 40 (1953).

8. Aronow, Thors, and Brownell, Positron Scanning of Liver and Pancreas, Intern. J. Appl. Radiation and Isotopes 5, 151 (1959).

This report was prepared as an account of Government sponsored work. Neither the United States, nor the Commission, nor any person acting on behalf of the Commission:

A. Makes any warranty or representation, expressed or implied, with respect to the accuracy, completeness, or usefulness of the information contained in this report, or that the use of any information, apparatus, method, or process disclosed in this report may not infringe privately owned rights; or

B. Assumes any liabilities with respect to the use of, or for damages resulting from the use of any information, apparatus, method, or process disclosed in this report.

As used in the above, "person acting on behalf of the Commission" includes any employee or contractor of the Commission, or employee of such contractor, to the extent that such employee or contractor of the Commission, or employee of such contractor prepares, disseminates, or provides access to, any information pursuant to his employment or contract with the Commission, or his employment with such contractor.