UNCLASSIFIED

UCRL 8682

[redacted]

UNIVERSITY OF CALIFORNIA

Ernest O. Lawrence Radiation Laboratory

FOR REFERENCE

NOT TO BE TAKEN FROM THIS ROOM

CONTROLLED THERMONUCLEAR RESEARCH QUARTERLY REPORT

December 1958, January and February 1959

BERKELEY, CALIFORNIA

UNCLASSIFIED

[redacted]

DISCLAIMER

This document was prepared as an account of work sponsored by the United States Government. While this document is believed to contain correct information, neither the United States Government nor any agency thereof, nor the Regents of the University of California, nor any of their employees, makes any warranty, express or implied, or assumes any legal responsibility for the accuracy, completeness, or usefulness of any information, apparatus, product, or process disclosed, or represents that its use would not infringe privately owned rights. Reference herein to any specific commercial product, process, or service by its trade name, trademark, manufacturer, or otherwise, does not necessarily constitute or imply its endorsement, recommendation, or favoring by the United States Government or any agency thereof, or the Regents of the University of California. The views and opinions of authors expressed herein do not necessarily state or reflect those of the United States Government or any agency thereof or the Regents of the University of California.

UNCLASSIFIED

[redacted]NLY

UCRL-8682

UNIVERSITY OF CALIFORNIA

Lawrence Radiation Laboratory
Berkeley, California

Contract No. W-7405-eng-48

CONTROLLED THERMONUCLEAR RESEARCH QUARTERLY REPORT

December 1958, January and February 1959

March 11, 1959

Special Review of Declassified Reports
Authorized by USDOE JK Bratton
Unclassified TWX P182206Z May 79

REPORT PROPERLY DECLASSIFIED

J. N. Green — 8-21-79
Authorized Derivative Classifier — Date

J. Cohen — 8-22-79
By — Date

Printed for the U. S. Atomic Energy Commission

UNCLASSIFIED[redacted]NLY

UNCLASSIFIED
[redacted] USE ONLY

CONTROLLED THERMONUCLEAR RESEARCH QUARTERLY REPORT

December 1958, January and February 1959

Contents

GENERAL INTRODUCTION 5

I. PYROTRON (MIRROR MACHINE) PROGRAM 8

Introduction and Summary 8
Magnetic High-Compression Experiments 9
Multistage Experiment 9
Plasma-Source Development 11
Single-Stage Compression Studies 12
Electron-Distribution Analysis 13
250-kev Electron Beam Accelerator (Fluor-Calibration Beam) 13
Electron Energy-Distribution Probe 13
Vacuum System for High-Compression Studies 14
P^4 Plasma Source Studies 15
Plasma Diagnostic Development 16
Spectroscopy 16
Development of a Plasma-Potential Probe 16
Low-Energy Neutral-Atom Trapping Experiment 18
Beam Neutralization 18
Surface Bombardment Studies 18
Pumping by Titanium Getter 19
Mass Spectrometer 19
Gettering and Sorption-Pump Development 19
Neutral-Particle Pump 19
"Catylon" Experiment 20
Occluded-Gas Source 20
Status of Occluded-Source Test Facility 20
Felix Grid Sources 21

II. THE ASTRON PROGRAM 22

Introduction 22
High-Current Microwave Electron Accelerator 24
Electron-Layer Calculations 25
Astron Experimental Program 26
Astron dc Test 26
Astron Model Test 27

III. LIVERMORE PINCH PROGRAM 28

Introduction 28
Sodium Pinch Experiment 30
"Hard-Core" Pinch Experiment 30
Electron-Beam Experiment 31
Plasma-Acceleration Experiments 32
300-kv Matrix Marx Bank 33

[redacted] USE ONLY UNCLASSIFIED

Sodium-Radiofrequency Analog Experiments 33
Study of Force-Free Configurations 34
200-Kilogauss Magnet 34
Theoretical Work on the Pinch 34
Theoretical Work on Rotating Plasmas and Waves 35

IV. BERKELEY PINCH PROGRAM 37

Introduction 37
Tubular Pinch Discharge (Triax) 37
General Analysis 38
Work on Low-Level Triax 39
Pinch-Time Study 39
Internal-Probe Study 39
Symmetry Study 40
Anode-Bombardment Study 41
High-Energy Triax 41
Neutron Energy Measurements 41
Tube and Switch Technology 42
Preionization and Preheating Experiments 44
Present Status and Future Plans 44
The Homopolar Device 46
Homopolar II 47
Homopolar III 51
High-Current Switch 54
Experimental Investigations of Waves in Plasmas 58

V. THEORETICAL RESEARCH 62

High-Energy Injection 62
Boundary-Layer Formation in the Pinch 62
Circuit Dynamics of the Pinch 62
The Hydromagnetic Stability of the Tubular Pinch Configuration 63
Mechanism of Electron Loss in the Magnetically Stabilized Toroidal Pinch 63
Hydromagnetic Stability in Linear and Tubular Pinches . . . 64

VI. ENGINEERING AND TECHNOLOGICAL DEVELOPMENT 65

Ultravacuum Development 65
"Black Hole" Pumping Experiments 66
Clean Pumping With Diffusion Pumps and Traps 66
Complementary Techniques 67
Gaskets 67
PIG Pumps 67
Motion Seals 67
Valves 67

Mechanical Engineering Development 68
Beta-Ray Experiment 68
Liquid Helium Pumping Experiment. 68
Source-Test Vacuum System 69
Beam Catcher 69
Big-Pinch Torus Design Study. 69
One-Inch Pinch 69
Sodium Pinch 70
One-by-Four-Foot Torus 70
Hard-Core Pinch 70
Toy Top 70
Variable-Energy Electron Beam Apparatus 71
Cryogenic Magnet. 71
Milpu 71
dc Test Facility 72
Astron TWL 72
One-Foot TWL Mechanical Test 73
Astron Electron Accelerator 73
Low-Temperature Refrigeration 74
Fast Mechanical Switch 74
Report Issued 75
Liquid Nitrogen Boiling Experiments 75
Whirling Dervish 75
Electronic Engineering Development 76
Pyrotron 76
Table Top II 76
Toy Top II ϕB 76
P-4 76
Felix 76
Guppy III 77
100-Mev Injector 77
Pinch and Collapse 77
Gamma Bank Area 77
300-kv Marx Generator 77
Astron 77
dc Test 77
Astron Machine 78
Switch Development 78
Mechanical Switching 78
Ignitron Development 78
Major Negotiations 79
Ignitrons 79
EPS-138, Unipolar Generator 79
dc Power Supplies 79
Data -Handling System. 79

TALKS AND PUBLICATIONS 80

OFFICIAL USE ONLY

UCRL-8682

CONTROLLED THERMONUCLEAR RESEARCH QUARTERLY REPORT

December 1958, January and February 1959

Lawrence Radiation Laboratory
University of California
Berkeley and Livermore, California

March 11, 1959

GENERAL INTRODUCTION

C. M. Van Atta

This report is the first of what is intended to be a series of quarterly progress reports on controlled thermonuclear research. With the designation of controlled fusion as an unclassified field of research and the consequent elimination of the large Sherwood information meetings at which progress was periodically reported, this medium has been chosen as the most practical means of recording at regular intervals advances made in the program. Because the program has only recently been declassified the staff has been very active in publication of research results in the professional journals and in giving talks at meetings of scientific and engineering societies. A list of recent talks and publications appears at the end of this report.

The past year has been particularly eventful for those engaged in controlled thermonuclear research. The decision by the U. S. Atomic Energy Commission to exhibit all aspects of the program at the Geneva Conference on Peaceful Uses of Atomic Energy was enthusiastically carried out by members of the controlled thermonuclear research groups, with the gratifying result that the exhibit was judged a huge success by most observers and participants. However, the long absence from the laboratories of most of the key personnel in the program and the consequent loss of support personnel to other programs meant that the controlled fusion program suffered a major loss of research momentum which has only recently been restored approximately to the pre-Geneva level.

Because this Quarterly Report is the first since the Geneva Conference, all significant accomplishments since the conference have been included. The major components of the Lawrence Laboratory controlled thermonuclear program are:

I. Pyrotron (Magnetic Mirror) Program
II. Astron Program
III. Livermore Pinch Program
IV. Berkeley Pinch Program
V. Theoretical Plasma Research
VI. Engineering and Technological Development

OFFICIAL USE ONLY

There are in addition a number of minor components of the program, two of which will be mentioned briefly at this point. Reports on both of these projects will be included in the next Quarterly Report.

After the return of equipment from Geneva the exhibit Ion Magnetron was re-assembled, with the central anode tube supported rigidly on insulators at both ends of the machine rather than with one end free as had been the previous practice. At present the group under James Donald Gow is attempting to understand the mechanism of formation, the electron density, and the ionizing efficiency of the electron sheath formed around the central anode tube. The slope of the current-rise curve during the first few microseconds of the discharge and the current spike to which this initial rise grows are believed to be associated with the sheath formation. Although a considerable amount of work has been done by the group, it is difficult to draw firm conclusions about the electron sheath on the basis of the observations made to date.

The Beta-Ray Experiment of Eugene Lauer and Gordon Gibson is now producing significant data. Ne^{19} gas is produced by the 90-inch cyclotron and led into the body of a magnetic-mirror confining field. Positrons are randomly released by the Ne^{19} atoms, are trapped in the field, and subsequently leak out the ends by (a) prompt escape because initial velocities of some positrons lie within the escape cone, (b) delayed escape due to scattering of the residual gas in the chamber, and (c) delayed escape due to a nonadiabatic process. Confinement times for 500-kev positrons of the order of several seconds have been observed and are found to compare favorably to that expected for multiple scattering on the residual gas as long as the orbit size is not too great. Indications are that upon variation of the residual gas pressure, orbit size (magnetic field), and energy of the observed positrons the beta-ray experiment will yield detailed information on the mechanisms of loss through magnetic mirrors.

An increasing interest in the fundamental aspects of plasma behavior is noted in all groups in the program. Various types of plasma oscillations and waves are the subject of a number of experiments, some of which are described in later sections of this report. A project is now being started at Livermore by Gilbert Brink for measuring a number of the cross sections of interest in controlled fusion processes by crossed-beam techniques.

Graduate-student participation is being encouraged at both sites. Three graduate students are already engaged in the program in Berkeley and one at Livermore. A large number of Physics and Engineering graduate students have expressed their interest in making similar arrangements. However, because of the necessity of defining acceptable thesis topics and arranging for faculty supervision, graduate students can be assimilated by the program only in limited numbers.

The approximate costs and cost distribution for the controlled thermonuclear program during December and January are given in the table below. Figures for February were not yet available at the time this report was written.

Operating costs (thousands of dollars)					
	Magnetic Mirror	Astron	Pinch B + L	Other & General	Totals
December 1958	180	85	110	105	480
January 1959	215	87	100	85	487

The total direct effort and its division between the Livermore and Berkeley sites for the same period is given in the next table.

Direct effort (man-months)			
	Livermore	Berkeley	Totals
December 1958	216	42	258
January 1959	218	38	256

During the next few months the effort on controlled fusion research is expected to increase from the present level of approximately 260 to about 290 man-months per month by the end of FY 59.

I. PYROTRON (MIRROR MACHINE) PROGRAM

Richard F. Post

INTRODUCTION AND SUMMARY

During the last quarter the efforts of the Pyrotron group were, for the most part, concentrated in two major areas. The first of these was directed toward the documentation and improvement of the encouraging results obtained in the magnetic compression, adiabatic heating, and stable confinement of "low temperature" plasmas captured in experimental mirror machines. The main device in these studies is the multistage machine of Coensgen, although the older single-stage "Table Top" machine was also employed. In both cases, however, the emphasis was placed upon measuring the energy of the injected and heated ions, as it had already been established that the electronic component of the plasma can be heated and stably confined at very high temperatures (20 kilovolts). It was already known that, because of earlier limitations in the source and injection techniques, the ion energies were much lower than the above electron temperatures. The studies in the last quarter have not yet settled the question of the actual ion energies reached, but have resulted in the development of satisfactory ion energy distribution analyzers and have led to a considerable improvement in the performance of the plasma sources.

The other major area of effort has centered around the Felix experiment. This is an experiment directed toward studying the problems of creating a hot plasma in a mirror machine by the injection and trapping of energetic particles. Preliminary experiments, performed before the Geneva Conference, were done with "internal" injectors, arranged to inject energetic ions directly into an increasing magnetic field. Although some fast ions were actually trapped and contained for several milliseconds in those experiments, serious space-charge effects associated with the operation of the sources were encountered, so that the plasma densities achieved were discouragingly low. This indicated the desirability of turning to alternative methods of building the plasma. The method selected was neutral injection. In this method a beam of fast neutral atoms is created and caused to traverse a Mirror Machine confinement zone. Part of this beam is to be broken up by a low-density plasma within the confinement zone. If this process can be made cumulative a hot plasma can be created. This general method of injection is of the same general class as the molecular-ion injection methods (for example the Oak Ridge DCX experiment) or the proposed very-high-energy injection experiment (up to 1 Mev) of Lamb, Lauer, and Gibson of this laboratory. However, in the Pyrotron group experiments here reported, it is proposed to use much lower ion energies (typically 10 to 20 kev) in the initial experiments. This energy range was decided upon on the basis of a study of the scaling laws applying to the problem, particularly those relating to plasma build-up time, the required vacuum conditions, and the size of the apparatus. These scaling laws seem to favor intermediate energies heavily, despite the clear disadvantage of the large charge-exchange cross sections encountered at these relatively low energies.

Finally, as a part of a general program of plasma physics studies, effort has also been going forward to exploit the steady-state plasma source known as P^4 in determining various fundamental effects, such as wave propagation and spectrum-line excitation, which can be studied effectively in a device such as this.

MAGNETIC HIGH-COMPRESSION EXPERIMENTS

Frederic H. Coensgen in charge

Magnetic high compression is another approach to the generation of energetic plasmas in magnetic-mirror machines. In these experiments electrically neutral plasma is injected into the initially evacuated chamber rather than beams of ions or energetic neutrals. The plasma injection has the advantage of avoiding space-charge neutralization difficulties, but the initial ion energies are low. The charged plasma particles are "heated" by the application of pulsed magnetic fields. The extreme reliance upon "adiabatic magnetic heating" is another unique feature of the experiments. This method has been developed over a period of years by pursuing those techniques which led to long containment times in mirror machines and which have produced energetic plasmas as judged by electron energies.

A rather long break in the work occurred in the past year because of preparation for and participation in the Geneva Conference and because of a large-scale laboratory review of the Sherwood program. During this period the high-compression work was critically examined by the Sherwood group as well as by the Laboratory committee. There is general agreement that significant results have been obtained, and the high-compression method should be further developed. However, it was suggested that the effort be concentrated on the most promising activities in order to obtain concrete results or answers in reasonably short time. Therefore, some reorganization has been made, and the former Table Top and Toy Top experiments are operated as an integrated high-compression group. The primary objective of the group is the development of a multistage system to produce deuterium plasmas in which the mean ion energy is several kilovolts. Consequently increased support is being given to the development of the multistage system, the plasma source development is being confined to the titanium washer stack source, and Table Top is being operated as a center for the development of plasma-measurement techniques.

Multistage Experiment

It is obvious that the design of a multistage experiment is strongly dependent upon the characteristics of the injected plasma. At the time the three-stage experiment was designed the mean ion energies in the plasma from the available source did not exceed 5 ev; therefore only weak dc fields were needed and latitude could easily be provided. However, it may be possible to inject the much more energetic ions from the stack source. Higher dc fields will then be required, and greater care will be needed in the design of the entire experiment.

As it is quite advantageous to start with the higher ion energies, it is of importance to determine whether or not the plasma from the stack source can be injected and trapped in a magnetic field. It is known, of course, that it can be injected along the magnetic field lines, but is is not immediately apparent that these highly directed plasmas can be injected and trapped in a magnetic field so that an appreciable fraction of an ion's energy appears as rotational energy in the magnetic field. The difficulty probably arises from the electric field established by charge separation as a plasma enters transverse to the magnetic field. This polarization field is in such a direction that the $E \times H$ drift velocity is along the ion's initial direction of motion. Limited experiments firing the sources transverse to the magnetic field indicate that trapping with, say, 10% of the energy in the rotational mode may be easy. First, the electron density was observed by means of a microwave interferometer at the first compression region of Toy Top. The electron density was found to be almost an order of magnitude greater when two sources at the injection end were fired simultaneously from opposite sides of the chamber than when only one transverse source was fired. Preliminary measurements of rotational energies were then made by means of a 180° magnetic spectrometer inserted in the 18-inch section of Toy Top. The guiding field served as the field for the spectrometer. Eight sources were mounted in a symmetric array about the axis at the injection end. The angle between the source axis and the vacuum-chamber axis could be varied from 10° to 55°. Ions with rotational energies of the order of 35 ev were found. Comparison of the energies corresponding to the time of flight from the injection point to the analyzer with the observed rotational energies indicates that the ion velocities were primarily directed along the magnetic field lines. There are two disadvantages with the internal analyzer. First, the collector plates should be 1 to 2 meters long to integrate to low values of θ; and, second, the plasma density at the analyzer slit is high. High plasma densities at the slit lead to polarization and space-charge effects within the instrument. Such effects were apparently present in the above measurements, for signals were received on collectors that should have been baffled.

The method now considered for studying the energy and angular distribution of the injected ions is based on the adiabatic condition for reflection, $\sin \theta = R^{-1/2}$. A vacuum chamber 20 ft long and 18 in. in diameter has been constructed in the Toy Top room and provided with a uniform field. A mirror field can be established at the center of this system of sufficient magnitude that all ions with $\theta > 10^{\circ}$ should be reflected. The system is long enough that the mirror field does not disturb the end fields, so that neither the injection nor analyzer conditions are affected by it. It is proposed to measure the ion energy distribution as a function of the mirror ratio R and thus, by subtraction, determine the distribution of the trapped ions. As the ions of interest should have large values of θ and perhaps relatively large orbits, two questions arise concerning their adiabaticity. First, if the ion's angular momentum does not transform to linear momentum as fast as the adiabatic calculations indicate, all ions that have large values of θ may strike the chamber walls and be excluded from the analyzer. Second, the mirror may not reflect ions with large orbits. These questions are being investigated by use of an energetic ion source as used in the Felix studies.

At this time the vacuum chamber, the dc magnetic fields, and the high-energy Felix-type sources have been assembled and measurements are beginning. Also one of the magnetic ion analyzers has been provided with 12 channels, so that the ion energy distribution over a range of 100 can be determined with a single pulse. At present this information is recorded by 12 oscilloscope traces, but considerable design has been done on a data-handling system to record the data in digital form. The relative efficiencies and the energy resolution of each channel of the analyzer have been determined through the use of an rf ion source.

In addition to the dc fields, the system was assembled with a pulsed magnet, so that the trapped ions could be compressed and transferred over the mirror. It is hoped that we can show that the ion heating is at least as great as that predicted from the adiabatic theory. If this result is obtained, a complete multistage system will be designed and built. It should be mentioned that only limited injection studies will be carried out in the Toy Top room. The goal is to achieve initial rotation energies of 20 ev or greater. Further injection studies will be carried out in a dc system similar to that described above. This dc test stand was completed early in December and is being used for plasma-source studies. As there is more copper in the new magnets, dc fields up to 2000 gauss will be available when the Perkins power supplies are installed.

Plasma-Source Development

The energy distribution of the ions in the plasma from the stack source was first measured in January 1958. The mean ion energy was found to be ~200 ev, which is surprisingly high. Several cross-checks and re-determinations have been made; and, although some low-energy ions may escape detection, the existence of the high-energy ions is well established. It is the purpose of the present investigation to find those factors which affect the energy distribution and to understand the acceleration mechanism.

Hydrogen has been one of the most copious impurities, often exceeding the deuterium output. Early in December it was found that the hydrogen could be eliminated if the source current was not damped and the repetition rate was increased. If a 7.5-μf capacitor is used in the pulser and the source fired once every 10 seconds, most of the hydrogen disappears within a half hour of operation. The deuterium output remains high even after 2000 pulses. It is postulated that for low repetition rates using short current pulses, a layer of active titanium is formed on the source parts, and this surface loads with hydrogen from the residual gases in the vacuum chamber, such as water. In the present mode of operation the residual environment is probably predominantly deuterium. The longer current pulses evolve more deuterium, and the deuterated titanium washers are maintained at higher temperatures, thus allowing a continuous evolution of deuterium and accelerating the diffusion of the deuterium through the metal.

By replacing various deuterated electrodes in the source with tantalum electrodes it has been shown that most of the energetic ions arise from the front washer. Higher ion energies (~700 ev) are obtained with a source in

which the intermediate washers are of tantalum. The ion energy distribution is being studied as a function of the length of a source with only one loaded electrode.

At present the evidence indicates the ions gain energy by falling through an electric potential. This conclusion is based on the close correlation of the voltage measured across the source and the peak of the energy distribution. It is further supported by the fact that many maxima of the energy distributions of the impurity ions are nearly related as ZV where Z is ionic charge.

This work is carried on in the dc test stand mentioned above. Considerable time and effort were necessary to reduce electrical pickup in the ion analyzer. A 10-channel 180° ion analyzer has been designed for this system, but fabrication has not started.

Single-Stage Compression Studies

The problem of ion analysis of the compressed plasma in the Table Top experiment is complicated by the fact that only those ions which are scattered out of a mirror are available, thus the particle current is low. Two ion analyzers are under development for this specific problem. In the first a weak guiding field (~400 gauss) is used to focus ions into the entrance aperture of an E×H analyzer. The analyzer magnetic field is then aligned with that of Table Top. This instrument has been under development by a contract physicist from Stanford Research Institute and has been on the Table Top system for several months. At this time the analyzer appears to function when ions enter along the magnetic field lines; however, any perpendicular velocity components cause the measurements to be in error. The guiding field, which has the advantage of increasing the current to the analyzer, must be carefully aligned with the pulsed magnetic field. At present the alignment is such that ion signals are received in the analyzer for 500 μsec if the Table Top bank is charged to 5 kv. For higher compressions the signals cut off sooner.

The second analyzer is being built by a contract physicist from Sylvania Microwave Laboratory. This analyzer consists of a magnetic spectrometer followed by an electrostatic spectrometer, similar to those used at the Toy Top experiment, and equipped with an electron multiplier. A postacceleration electrode system has been designed, so that all ions can be accelerated to the same energy before entering the electron multiplier. Considerable care was taken not to build in selective focusing for ions in a particular energy range. This instrument will first be tested in a small system using a plasma source, then installed on Table Top.

One of the pulsed coils developed a water leak, and the Table Top coil system was replaced. A glass vacuum chamber is under construction to replace the present vacuum chamber, which has a Lucite center section.

A mechanical crowbar switch is being tested. If this switch operates satisfactorily, the present Table Top coils can be replaced by a set with lower resistance so as to extend the L/R decay time, which is now about 4 msec.

ELECTRON DISTRIBUTION ANALYSIS

Robert E. Ellis

50-kev Electron Beam Accelerator (Fluor-Calibration Beam)

The hardware for the gun, accelerator tube, deflection plate, etc. is being fabricated or has been received. Norris Carlson is setting up for a preliminary test of the electron gun, electrical controls for the gun, and small magnetic deflector. The electronic circuit for the pulsed deflector plates is not yet completed, but David Edson is working on it.

This accelerator will produce a well-collimated beam of electrons with energy adjustable through a range from ~1 to 50 kev. The beam will be used to calibrate the signal produced in a photomultiplier tube when the electrons enter a fluor, both with respect to beam intensity and electron energy. The beam will be pulsed into the fluor and the current measured in a Faraday cup with associated electrometer. It is hoped to determine the scintillation efficiency of the fluor as a function of beam energy, as well as possible saturation effects dependent on beam intensity under such conditions as would apply when using the fluor as a probe in a mirror machine. It is presently planned to test CsI and terphenyl-loaded polystyrene fluors. It will also be possible to determine the attenuation effects of various absorbers in front of the fluor, such as aluminum or plastic foils.

Electron Energy-Distribution Probe

A four-channel fluor probe has been constructed for the purpose of examining further the electrons escaping axially through a mirror on Table Top. This probe should reduce the time required to determine the electron energy distribution by a factor of about three. The design permits radial motion of the probe axis to provide for scanning of the escaping plasma for intensity as a function of the distance from the machine axis. Thus a radial profile of the escaping electron flux may be determined (probably the single-channel probe would be used for this purpose). In conjunction with the axial multichannel probe it is planned to use a radial single-channel fluor probe, located midway between the mirrors, to look at electrons that diffuse radially.

It is hoped that a satisfactory machine code for the analysis of data obtained with these probes will be available in the near future so that the results of each run may be analyzed in such a way that succeeding runs may be readily planned.

A code for the 650 computer is being developed for the matrix-inversion solution of the integral equation which results from the absorber experiment with the electrons escaping from the Table Top machine. Attempts thus far made to determine the distribution function by ignoring the integral remainder beyond an upper cutoff energy of about 200 kev have been unsuccessful. A code is now being developed by John Matthews which will calculate the remainders on the basis of the assumption that the high-energy tail of the energy

distribution of the electrons escaping from Table Top results from a three-dimensional Maxwellian. This method was used in previous hand calculations and yielded the result that--at least above ~10 kev--the distribution is closely Maxwellian for the plasma electrons.

The absorber-scintillator method of measuring the electron energy distribution of escaping electrons has the disadvantages of involved mathematical analysis, necessary assumptions about the distribution function, and a low-energy cutoff which may be several kilovolts. A method is now being investigated which might enable one to eliminate all these disadvantages. This method involves the use of accel-decel-accel voltages of perhaps 150 kv decel and 100 kv accel. This voltage is determined by the electron energy above which the fluor signal contributed by the number of electrons of energy $E > 150$ kev is small compared with the signal produced by the number of electrons whose energy is very low. Absorber and microwave experiments indicate that the plasma-electron mean temperature is ~20 kev. In this new detection system, the energy of electrons entering the fluor is given by $E_a + E - E_o$, where E_a = constant final accelerating voltage, E_o = variable decelerating voltage which prevents electrons of energy $E < E_o$ from being accelerated to the fluor by voltage E_a, and where E, E_o are measured relative to plasma (or ground) potential. Thus with a decel voltage of 150 kv the number of electrons being accelerated through voltage E_a should be less by orders of magnitude than the number accelerated to the fluor at low decel voltages, whereas the particle energy might be twice as great.

The advantages of this detection system are that (a) no assumption is necessary concerning the distribution, (b) the relative distribution may be determined by taking the first derivative of a curve of the signal versus the decel voltage for two different accelerating voltages, and (c) there is no low cutoff energy. There may, in fact, be some difficulty in construction of isolation transformers at these voltages, so that further consideration should be given to the real necessity of such high voltages.

This same detection scheme could in theory be applied to ion detection for one species of ion. The accelerating voltages required to allow reliable ion detection in a fluor or emulsions has not yet been determined, but repelling voltages of ~200 kilovolts would probably be required to eliminate the electron signal. Single-particle counting techniques might also be used here by looking at the protons or neutrons resulting from the $D(d,p)T$ or $D(d,n)He^3$ reactions in a thin deuterated polyethylene target, but the problems involved have not been thoroughly considered.

Vacuum System for High-Compression Studies

A program is being initiated wherein Melvin Bainter will try to develop a vacuum system which will be an improvement over those systems now used in the high-compression program. Preliminary steps have been taken to set up a 10-inch oil diffusion pump with a high-speed liquid-nitrogen-cooled baffle. The object in mind at present is to develop a system with maximum pumping speed for reasonable sized components which might be used in conjunction with titanium pumping to produce the speed and vacuum

desired for the high-compression experiments. Ralph Ullman has made design calculations for size of components versus over-all system pumping speed. Also, an analysis of the Toy Top vacuum system is being made by him to determine how much would be gained over the present installation by replacing it with components to be tested by Bainter.

Inquiries have been made by Thomas Batzer regarding the possibility of adapting ceramic-metal vacuum enclosures, developed by RCA for the Matterhorn project, to the high-compression experiments. Information has been requested concerning the feasibility of producing large-diameter (30-inch) ceramic tubes with ram-seal inconel metal flanges as well as glass bonded sections, to provide low-loss clean, bake-outable vacuum enclosures suitable for use in high-frequency pulsed magnetic fields. If such a system appears feasible the construction and testing of components might be accomplished by Bainter at such time as the degree of cleanliness and ultimate high vacuum provided by such a system might be desired in the program.

P^4 PLASMA SOURCE STUDIES

Andrew Gardner in charge

Current work has centered on diagnostic measurements to describe the steady-state plasma column of P^4 as it now exists. It is intended that a technical report covering this phase of the study will be completed during the next quarter.

The principal effort to date this year has been devoted to spectroscopic measurements and instrumentation. A system has been installed for oscilloscopic monitoring and measurement of the relative intensities of two spectral lines in the visible region. A grating spectrograph (Ebert mounting, 3.4-meter focal length) has been set up and some initial exposures have been made; this will provide the dispersion needed for identification of some of the spectral lines and may be useful for some line profile studies. The quartz spectrograph will continue to be used in series with a Fabry-Perot interferometer for line-broadening measurements.

A more convenient system has been installed for introduction into the beam of an electrically floating tungsten wire temperature probe. It has been found that the heat flux (from electrons in the beam) is sufficient to melt the tungsten and thus form a molten ball on the end of the suspended wire.

Preparations are under way for various studies with the P^4 equipment. These include:

(a) Measurements of microwave radiation by the plasma.

(b) Various spectral studies, including measurements of radiation in the vacuum ultraviolet.

(c) Operation with gases other than helium.

(d) Propagation of hydromagnetic perturbations.

(e) Interaction with an electron beam which will be injected from the end opposite from the discharge.

(f) Heating with radial E fields.

PLASMA DIAGNOSTIC DEVELOPMENT

Spectroscopy

Raymond L. Kelly

During the period covered by this report, work has proceeded on the calibration and use of the grazing-incidence vacuum ultraviolet spectrograph and on the preparation of a table of atomic and ionic emission lines of wave length less than 2000A.

The major sources of spectral lines so far encountered are carbon and oxygen. Lines from these elements, up to C^{+++} and O^{++++}, have been observed in sparks between electrodes of carbon, titanium, copper, brass, and aluminum, as well as in the radiation from the 1/2×2 WS(washer stack) titanium hydride plasma sources. Analysis of the spectrum from the 1/2×2 WS source has not yet been completed. Preliminary identifications include Ti III, Ti IV, Ti V, Ti IX, C II, C III, C IV, O II, O III, O IV, O V, H I (where C I is neutral carbon, etc.)

The vacuum ultraviolet wave-length table has progressed to the point that all published information and some unpublished data have been put onto punched cards. The data have been checked to eliminate duplication. The lists have been re-sorted and printed and are now being checked again. It is expected that the table can be issued as a UCRL report before the end of April.

Development of a Plasma-Potential Probe

Thomas Passell

Two approaches toward an electric-potential probe for plasmas have been studied, both theoretically and experimentally. Both utilize an electron beam. The first takes advantage of the decreased flight time of an electron traversing a region of high positive potential. Flight-time changes due to the presence of high-potential (presumed positive) plasma are measured as a phase shift of an rf-intensity-modulated electron beam.

The second and apparently more practical technique utilizes the drift of an electron in crossed electric and magnetic fields. This drift (in the E×B direction) added to the forward electron velocity produces a net deflection given by the equation

$$D = \frac{E_\perp \ell}{B\, v_f} \leftarrow \frac{E_\perp \ell}{B\, v_f} ,$$

where D is the deflection in meters; $E_\perp$ is the component electric field intensity due to the plasma perpendicular to the magnetic field (in volts/meter), B is the magnetic field in webers/(meter)^2; ℓ is the distance along the direction of the electron beam (and also B) over which $E_\perp$ exists, and v_f is the forward velocity of the initial electron beam (in meters/sec).

The second technique requires the establishment of geometry wherein the main component of electric field intensity due to the plasma is perpendicular to the magnetic field. This is generally possible in the cylindrical mirror-machine geometries presently under study at Lawrence Laboratory.

Thus far these two techniques have been applied to measuring the potential of the plasma from a titanium hydride pulsed arc source designed for injection of 5- to 15-kev hydrogen ions into mirror geometry. Typical outputs are 50 ma of 5-kev H^+ ions from a 1/16-by-1-inch slot, with pulse lengths of 200 μsec.

Use of the first technique was frustrated by the presence of radio-frequency noise generated by the arc and by difficulties with proper shielding of the electron-beam collector from stray rf.

The second method is just now being applied. Chief difficulties thus far have been (a) shielding the electron collector from stray electrons and ions from the plasma itself; and (b) dealing with secondary electrons which, even at 20 ev primary energy, produce a succession of spots on the phosphor-coated electron-beam collector, giving the impression of very large deflections of the primary beam. These spots apparently arise from successive drifts of electrons repeatedly traversing the region of electric field, acquiring a deflection on each pass.

Calculations have been made of the maximum space potential for H^+ ions in a torus of 14 cm maximum diameter and of cross section 4 cm thick by 10 cm wide (approximately the size actually observed). The result obtained for the particular practical case of 50-ma H^+ ions at 4 kev energy is 1200 volts. Since a ground plate may be placed on the order of 6 cm from the region of maximum potential, electric field intensities of approximately 200 v/cm could theoretically exist. The calculation assumes that no stray electrons exist within the beam to neutralize it.

LOW-ENERGY NEUTRAL-ATOM TRAPPING EXPERIMENT

Charles C. Damm in charge

Beam Neutralization

A hydrogen-gas target has been selected for initial attempts at design of the beam neutralizer. This choice is based on the predictable atomic behavior (charge exchange and ionization) in hydrogen and on the minimum angle of multiple Coulomb scattering obtainable with hydrogen (Z = 1).

Two possible approaches are under active consideration. The first would employ a gas cell, at perhaps 1 micron pressure. In order to reduce the flux of cold hydrogen gas molecules proceeding directly through the beam tube to the trapping chamber, the pressure distribution on the output side of the neutralizer should be adjusted to an optimum, which can be specified and is achievable with modest pumps. In this way, the direct flux is reduced by scattering on intervening molecules. There is, however, an uncertainty of a factor of 2 to 4 in the molecule-molecule scattering cross section for this application, so that it is planned to mock up such a neutralizer to measure the direct gas flux. It is within reason that the gas flux through the beam tube other than the direct flux can be suitably pumped by a differential pumping system. A disadvantage of the method is the length of the pressure-drop tube required, which is 100 to 200 cm, or more. A crude estimate based on the use of such a neutralizer places the critical ion-beam density for exponential build-up (10-kev D^+, 50-kilogauss field) at about 10 ma/cm^2.

The second approach to a hydrogen-gas neutralizer is a supersonic jet flow across the ion beam. A nozzle and exhaust system have been designed, and a test arrangement is on the drawing board. By use of available vacuum pumps, the jet formation, the mass flow, and pumping-speed requirements will be studied in a preliminary experiment. This work is being pursued by Archer Futch.

A third approach to neutralization by hydrogen has been considered. This involves formation of multiple molecular beams in small collimating tubes, in the manner of conventional molecular-beam experiments. For our application, the molecular beams obtainable are very much too low in intensity, and the pumping-speed requirements are excessively high. This method does not appear to be worth pursuing.

Surface Bombardment Studies

In anticipation of experiments on surface response to energetic ion and atom bombardment, a Von Ardenne-type proton source, kindly made available by John Fasolo, has been operated dc at ion energies up to 13 kev and beam intensities of about 10 ma. Beam focusing by means of electrostatic lenses is now being attempted. A vacuum system for this source is being designed using a CEC evapor-ion pump. The goal is to deliver a mass-separated proton beam through a tube (for differential pumping) to an ultra-high-vacuum system containing the surface under study.

Pumping by Titanium Getter

Titanium evaporated from a tungsten filament by simple I^2R heating has been used by Milleron, Lauer, and others for getter pumping. Using this arrangement we have observed hydrogen absorption rates as high as 50 micron-liters per second for a period of a few hours. Base pressures below 10^{-7} mm Hg were observed. Since we have potential applications for such pumping characteristics, we plan to pursue this relatively simple approach. Some effort is also being expended to make a simplified electron-bombardment evaporator for titanium wire. The goal is to achieve results comparable to the simplified I^2R evaporator but with longer operating lifetime.

Mass Spectrometer

The mass spectrometer is operating on a nonbakeable vacuum system, and is basically in a usable condition. Major effort has been to improve the signal-to-noise ratio, and partial pressures in the range of 10^{-8} mm Hg are now easily detectable. Quantitative analysis will be attempted in the near future, and with the addition of a bakeable vacuum system, the spectrometer will be applied to the fast getter-pump experiment.

Gettering and Sorption-Pump Development

Earl C. Popp

Neutral-Particle Pump

This apparatus required rebuilding after certain experiments last November in which liquid nitrogen circulated through the water-cooling coils of the evaporator caused serious warping of flanges and consequent loss of vacuum. At the same time we were asked to change location, and a decision was made to rebuild the apparatus in a manner that would correct the warping, permit accurate alignment of the main tank and evaporator, modify all possible flanges to Westinghouse "pinch" type, redesign the inadequate power supply and install it in proper racks, and provide for the attachment of a mass spectrometer to the evaporator.

It is estimated that this work is approximately 80% complete. We expect to be on high vacuum in the evaporator by February 27 and on high vacuum in the feeder by March 7, and to have a baked-out high-vacuum check completed by March 12.

A new bakable mechanical pulsing valve for H_2 is under construction in our shop after design by Jim Ryan and Al Waugh. We expect to have this functioning by March 15.

The mass-spectrometer assembly and cart are approximately 85% complete through main shops and should be complete by March 15.

"Catylon" Experiment

When it became obvious that the fast pumping speeds observed last November were probably caused by adsorption, perhaps chemisorption, of the H_2 on the great surface area of molybdenum flakes or crystallites, we suggested the possibility of using colloidal metals known through their past history in the catlytic hydrogenation of oils, etc. to be good hydrogen adsorbers. It is proposed to carry these colloidal particles on an inert, bakable structure used as a liner for the evaporator. Hydrogen-sensitive metals and various porous structures are being investigated. If this method were successful we might get rid of a complicated wire-feeding and -evaporating apparatus.

A small, stainless steel chamber and evacuating system for this evaluation is nearly complete. Many manufacturers of catalysts are cooperating in making available working samples of their materials. Some of their research people have said that this method might hold promise, although they haven't much data in the high-vacuum field.

Occluded-Gas Source

James Steinhaus

The following parameters for occluded-gas sources have been studied during this quarter for both D_2 and H_2 gases:

1. Depletion of output as a function of the number of pulses for D_2 and H_2. (5-kv accel., H = 3.27 kilogauss, 100-amp arc current, 250-μsec pulse length, 10-sec pulse interval.) Depletion was observed in terms of (a) total output current, (b) currents of the components m/e = 1, m/e = 2, (c) pressure contribution of each pulse, ΔP.

2. Effects of varied pulse intervals (time between pulses) were examined with 10-μsec pulses (D_2 only) as well as with the typical 250-μsec pulse length (D_2 and H_2). Data recorded in these tests were also in terms of (a), (b), and (c) mentioned above.

3. Effects of various magnetic field strengths on general behavior and output of the source with H_2 gas were studied. Changes in total output current and ΔP were noted.

Status of Occluded-Source Test Facility

The test facility, which is now versatile and well instrumented, has been inoperable during the last part of the quarter due to the use of the area and magnet power supplies by the Mechanical Engineering Department for "cold coil tests." During this time emphasis was focused by our group on the new high-current dc calutron-type source for Felix.

FELIX GRID SOURCES

Frank Gordon

An essential component of the new low-energy-injection small-reaction-volume approach to the mirror-machine reactor is a high-current source which can inject several hundreds of milliamperes into a nearly parallel beam.

Calutron-type sources are known to have high output. As a result of simple beam trajectory studies two possibilities are being explored. The first is a 4-by-1/8-inch extraction slit followed by a 90° beam trajectory in the magnetic field. With a maximum beam in the neighborhood of 1 amp we hope to obtain, after collimation, the desired amount of parallel beam. The second possibility is a grid source having nearly a square inch of extraction-slit area. With the expected several amperes of beam it is again hoped to obtain the required amount of parallel beam after 180° in the magnetic field.

A source has been designed, almost all the parts have been machined, and assembly is within a week of being complete. The necessary power supplies and control systems have been engineered and assembled, and seem almost certain to be ready before the March 15 deadline.

This source should facilitate testing of both exit geometries, with variations of each, in the existing Felix vacuum tank. Initial measurements will be made of beam current, gas efficiency, and angular distribution of the beam.

II. THE ASTRON PROGRAM

INTRODUCTION

Nicholas C. Christofilos

The basic principles of the Astron device are described in a paper given at the Second International Conference on the Peaceful Uses of Atomic Energy, Geneva, Switzerland.[1] During that meeting it was established that the key feature of the Astron--namely, the E layer (or a long cylindrical layer of "relativistic" electrons) which is employed to create the magnetic confining bottle and subsequently to heat the plasma up to fusion temperature--had not been considered in other countries. As a matter of fact, it turned out that the Astron concept is the only basic American controlled-fusion concept not discovered independently elsewhere. During discussions since the declassification of Sherwood, scientists who were exposed for the first time to this concept voiced criticisms and doubts with respect to the assumed basic property of the E layer, i.e., the possibility of magnetic-field reversal within the volume enclosed by the E layer. The postulated field reversal is a necessary condition for the creation of a pattern of closed lines of force referred to as the magnetic bottle. Hence, the accomplishment of this requirement is crucial to the success or failure of the Astron. Although a simple proof of the field reversal was given long ago,[2] no rigorous proof has thus far been derived for the general case of an E layer in which the electron energies are distributed over a wide range. Dr. Lewi Tonks has been working on this problem and has thus far obtained favorable results for monoenergetic electrons. Some of Dr. Tonks's work has been disclosed at the Second All-Union Conference on Gaseous Electronics, Moscow, Russia, and published in a UCRL report.[3] Subsequent progress on this subject is described below by Dr. Lewi Tonks.

On the subject of the stability of the E layer and the plasma, no work was done during this period.

A new theoretical development is a study of conceptual designs for radio-frequency high-current electron accelerators.[4] The basic feature of this accelerator is that unloaded cavities are employed, using a mode in which the phase velocity is slightly higher than light velocity. In addition, the stored energy of the cavity is considerably higher than in the Stanford-type accelerator. Hence, the frequency shift due to the presence of the high-current electron beam is negligible. Because this study was carried out only recently, no experimental program has yet been formulated for developing this type of accelerator.

---

[1] N. C. Christofilos, Astron Thermonuclear Reactor, UCRL-5032, 1958 (Geneva Paper Number P/2446).

[2] N. C. Christofilos, On the Theory of the Thermonuclear Reactor (B), BNL-2886, Oct. 1954.

[3] Lewi Tonks, Self-Consistent Field of Single-Type Electrons in a Uniform Vacuum Magnetic Field, UCRL-5335, Sept. 1958.

[4] N. C. Christofilos, High-Current Accelelerator, UCRL-5463-T, Jan. 1959.

The experimental program during this period consisted more of assembling hardware than of actual experiments. The electron-gun tests have been completed in Berkeley and the gun has now been installed at Livermore. The beam characteristics obtained during the Berkeley tests were:

electron energy, 680 kev;
beam current, 50 amp;
minimum beam diameter, 3.2 cm.

The beam quality is excellent--the random angular distribution at the minimum diameter is less than 5 milliradians.

The design of the first Astron model, including a 5-foot traveling-wave line (TWL)[5,6] for the electron injector, has been completed and the components ordered. The completion of this model by the end of this summer will make possible for the first time attempts to establish part of the E layer. The 5-ft TWL is too short to allow the injection of the number of electrons required to reverse the magnetic field. The required length of the TWL is 12 to 15 ft. Since the construction of a full-length line presents major engineering difficulties, it was decided that a shorter section should be built for the first trials. Consequently, in the first Astron model we would be able to check the stability of the E layer, and certain injection characteristics. Since the number of electrons per unit length of the E layer that can be injected by the 5-ft TWL is only 20% of the critical number required to reverse the magnetic field, we expect a reduction of the vacuum field by approximately 20%. However, if favorable results are obtained with this experiment we shall complete the design and construction of the 15-ft injection TWL.

The first Astron model will not be completed in less than 6 months. Consequently, in the interim an experiment called "dry run" will be carried out. The purpose of this experiment is to test some of the features of the injection TWL: specifically, the axial focusing of the electrons and the conditions of the initial trapping just after completion of the inflection from the electron gun. As can be inferred from the above description, the philosophy of the Astron experimental program is to proceed step by step so that results obtained in each step will be useful in preparing the next.

---

[5] N. C. Christofilos, Electron Injector System for the Astron Model, UCRL-5261-T, June 1958.

[6] R. L. Gluckstern, Analysis of Groove Focusing (Line I) By Means of a dc Current, UCRL-5286-T, June 1958.

HIGH-CURRENT MICROWAVE ELECTRON ACCELERATOR

Nicholas C. Christofilos

An essential component of any Astron model is an electron accelerator capable of producing high-energy electrons in very short pulses at very high current. Although high-energy electron accelerators have been known for a long time, none of these are capable of the needed high current (approximately 100 amp). Consequently, an improvement over existing accelerators is necessary. This subject has been studied recently,[1] and satisfactory solutions appear possible in all cases; namely, from 6 Mev and 50 to 100 amp for the first model, up to 60 Mev for a power reactor.

The new approach is to excite an unloaded cavity in TM modes in such a way that the phase velocity is slightly higher than the velocity of light. The length of the cavity is limited by the phase lag resulting from the difference between wave and electron velocity. The region of beam current of interest is in the vicinity of 100 amp. Beam diameter of the order of 10 cm is assumed to avoid excessive divergence from the self-field forces. The cavity diameter required is 2 to 4 ft for microwave and 20 ft for high-frequency acceleration. The excited mode is a standing wave; one of the two associated traveling waves is then employed for the acceleration. The skin losses are more than ten times as high as in the Stanford-type accelerator. These losses are still acceptably small in comparison with the beam power. However, because the skin losses are large, the stored energy is also large. Hence, frequency shift due to beam loading is very small.

Focusing of the beam is provided by rf strong focusing. The accelerating cavity is excited simultaneously in a second TM mode of infinite phase velocity. The azimuthal magnetic field of this mode provides the alternating-gradient field. This combination ensures the good quality of accelerated electron beam required by the Astron device.

A small development program is contemplated to verify experimentally the attainable field gradients and the frequency shift due to the presence of the electron beam in such a cavity. Construction of the first step--i.e., of the 6.5-Mev accelerator--is contingent on the result of this developmental program and the success of the Astron experiments.

---

[1] N. C. Christofilos, High-Current Accelerator, UCRL-5463-T, Jan. 1959.

ELECTRON-LAYER CALCULATIONS

Lewi Tonks

I have been concerned with a detailed analysis of the axially uniform region of the E layer in the proposed thermonuclear machine Astron. The electrons of this layer are initially injected tangentially around a circle with nearly identical energy, negligible radial velocity, and nearly identical axial velocity. Thus they all have the same canonical angular momentum, and any spread in this quantity at injection is negligible compared with a spread acquired in the ensemble of electrons from other causes during effective lifetime. The situation in the E layer is severely complicated by several factors: first, there is the drag of plasma electrons, which causes a progressive decrease in energy and a progressive change in canonical angular momentum, which is dependent upon trajectory; second, the angular scattering by plasma ions and electrons, which generates a statistical distribution in canonical angular momentum and in the perpendicular, both dependent upon trajectory; third, the diamagnetism of the plasma contributes to the field; fourth, there are possibly electric fields present; fifth, the terminal conditions that confine the action to a finite length of axis may have an important effect.

The problem is so complicated that it seemed wise to begin with simple cases and with the insight thus gained to proceed to more complicated ones. For this reason the first problem I tackled has been one in which the electrons are all supposed to have identical angular momentum, and this case has been analyzed so that we can now plot field distribution against radius through the E layer, we know the radial extent of the E layer, and we know the number of electrons per centimeter in the E layer for all possible configurations within the interesting range. In this case field reversal is indeed possible; the results are given and discussed in a separate report.[1]

The next most complicated case is that in which the electrons have a distribution in canonical angular momentum. They can have this distribution in a variety of different ways and I have chosen the simplest from the analytical point of view, and the most definite (because it leads to few parameters), by choosing all the electrons to have the same energy. The difference in angular momentum is associated with differences in the amplitudes of their excursions about a neutral surface. The calculations for this case are almost but not quite complete, and one finds here, too, that reversal is entirely possible. A report is to be issued.

The next case begins to strike a good deal closer to reality. This is one in which it is assumed that the electrons are slowed down in their motion by the viscosity of their interaction with the low-temperature plasma particles without scattering. Here, for the first time, the problem cannot be solved directly by using simple differential equations, but it is necessary to use successive approximations. A code has been written for this purpose,

---

[1] Lewi Tonks, Self-Consistent Field of Single-Type Electrons in a Uniform Vacuum Magnetic Field, UCRL-5335, Sept. 1958.

but we are encountering some difficulties--both of a mathematical and of a physical interpretive nature--which I believe we shall shortly overcome. The difficulty has to do chiefly with the trajectory shape, probably toward the end of the electron's effective life. If this part of the problem can be treated exactly without too much time and trouble, well and good; if it cannot, then probably the sensible thing to do will be to terminate the electron's life arbitrarily just before it gets into trouble, because it is my belief that when scattering is put into the problem our present troubles will be found to lie in a region where scattering already predominates in its effects.

Finally, some of the underlying theory required for the scattering case is fairly well in hand. I believe that I see my way clear on how to do the problem in its main feature, and at the moment I am working on the development of the diffusion equation that governs the angular scattering of the particles as they slow down. This is not simple because, in general, the velocity vector of the particle is skewed with respect to axial, radial, and azimuthal directions, and it is not a constant in space but wobbles as the electron executes scallops in its motion around the axis. In addition, angular scattering corresponds to a random walk on a sphere, not a plane.

ASTRON EXPERIMENTAL PROGRAM

William A. S. Lamb

1. Astron dc Test

The object of the Astron dc test or "dry run" is to inflect the electron beam from the electron accelerator (680 kv and 60 amp, 0.2 μsec duration) into a dc solenoid and attempt to observe the behavior of the electron beam by utilizing, first, a "groove" focusing system[1,2] to overcome space-charge forces and, secondly, a system using dielectric plates. This test will develop techniques for inflection and subsequent control of the electron beam, which are required for further experiments described in the next section.

This period has been one of construction and assembly of experimental equipment. The following steps were accomplished:

(a) The final assembly and mounting of the electron gun.

(b) The completion of the vacuum pumping system and leak hunting on the electron gun.

(c) The construction and testing of the two lumped-constant pulse lines and switches to energize the primary windings of the pulse-transformer cores of the electron gun.

---

[1] N. C. Christofilos, Electron Injector System for the Astron Model, UCRL-5261-T, June 1958.

[2] R. L. Gluckstern, Analysis of Groove Focusing (Line I) by Means of a dc Current, UCRL-5286-T, June 1958.

(d) The operation of the high-voltage system and rough calibration of the voltage metering on the electron gun without beam (i.e., cathode heaters not energized).

(e) Check-out of new charging supply to permit full-duty-cycle operation (60 pulses per second).

(f) Check-out of regulated dc power supply for exciting the field windings on the dc test line.

(g) Assembly and vacuum check of dc test line with groove focusing.

2. Astron Model Test

The Astron transmission-line test is to operate the traveling mirror system, trap the circulating electron beam between mirrors, and measure the depression of the applied field due to the diamagnetic effect of the trapped beam.

In order to accomplish these objectives, the electron beam must be inflected into a loaded transmission line which produces the moving mirror. The beam is then transferred into a magnetic-mirror geometry by means of a system of pulsed mirrors. This system should trap sufficient beam to produce a measurable depression in the applied field. The behavior of this weak layer of electrons can then be observed and compared with the theoretical estimates. Variations can be made experimentally in the various operating parameters and the behavior of the trapped beam studied. The following steps toward completion of the TWL (traveling-wave-line) equipment have been completed.

(a) A 1-ft section of the loaded transmission line was constructed and vacuum tested. Electrical tests were made and the results scaled to the 5-ft line to be used in the TWL tests. The 5-ft line assembly was then released for fabrication.

(b) The A-48 accelerator was dismantled and removed from the south shielded area (site of the TWL tests), and construction of the foundation for the apparatus to be installed was started.

(c) The mechanical design of equipment for this series of experiments was essentially completed.

III. LIVERMORE PINCH PROGRAM

Harold P. Furth

INTRODUCTION

During 1958, experiments done by us on the gamma toroidal-pinch apparatus demonstrated for the first time that there exists a large leakage of energy from the so-called "stabilized pinch." We proved further that this leakage does not mainly take the form of ultraviolet or visible radiation. On the basis of some suggestive soft-x-ray data, we have arrived tentatively at the theory that the plasma energy is carried to the wall by low-energy runaway electrons moving nonadiabatically through turbulent magnetic fields. The presence of small-scale instabilities has also been demonstrated directly by the large electrical resistivity of the discharge throughout the cycle, and by the presence of irreproducible fluctuations in the magnetic-probe signals near current maximum.

Our major experimental objectives at present are to determine the nature of the small-scale turbulence that is interfering with the pinch, and to investigate further the mechanism by which the plasma energy is carried to the wall. Two plausible suggestions regarding the nature of the turbulence have been made: (a) that it is hydromagnetic, and (b) that it is electrostatic in origin. There is, furthermore, a good possibility that both hydromagnetic and electrostatic instabilities play a role. The onset of irreproducible magnetic-probe signals near current maximum should probably be associated with hydromagnetic troubles, while runaway-induced electrostatic instabilities occurring from the start of the cycle may be blamed for creating the hydromagnetically unstable situation in the first place.

To discriminate between hydromagnetic and electrostatic effects, we are studying the pinch effect in sodium, where only the hydromagnetic effects can appear. In a complementary series of experiments performed with plasma, we are investigating "hard-core" pinches[1] which have much greater hydromagnetic stability than the ordinary "stabilized pinch." In these discharges any trouble that occurs must clearly arise from nonhydromagnetic effects. Finally, we are studying how energetic electrons behave inside the stabilized pinch, by shooting an electron beam through an electrode, along the pinch discharge, and onto a screen at the other electrode. By observing the defocusing of the beam, we hope to demonstrate clearly whether electrons can cross the pinch field by nonadiabatic processes, and if so, where in the discharge and when in the pinch cycle these effects are strongest. Thus we can learn something both about the nature of the pinch turbulence and about the way in which it facilitates the leakage of plasma energy across a magnetic field.

[1] S. A. Colgate and H. P. Furth, Small-Scale Instabilities of the Pinch and a Suggested Remedy, the Levitron, UCRL-5392, Nov. 1958.

All our experiments of the stabilized-pinch type are at present conducted in linear geometry, the object being not the creation of a thermonuclear plasma but rather the investigation of basic processes. It is considered unlikely that further attempts to reach high temperatures with the toroidal stabilized pinch in its present form and with parameters similar to those used in the past will prove profitable. There is a better chance that pinches of the hard-core type will be successful, firstly because of their greater hydromagnetic stability, secondly because one can create pinch configurations arbitrarily close to vacuum configurations (low-current density in the plasma), and thirdly because it is possible to have initial vacuum magnetic-field configurations that can confine a hot starting plasma. Accordingly we have designed and are acquiring a 12-in. toroidal shell with internal hard-core ring that can be built into a high-temperature experiment, provided that present linear-pinch experiments give rise to a promising scheme.

We are continuing our research into dynamic pinch processes, in particular the use of pinch-type effects in plasma acceleration. On the basis of past experience, in both the U. S. and the U. S. S. R., there is every reason to think that large quantities of plasma (10^{17} to 10^{19} particles) at energies of 100 to 1000 ev can be accelerated with reasonably modest equipment. Such plasma jets are of interest for injection (directly or neutralized) into machines of the mirror type, as well as for various basic research purposes.

In addition we are pursuing several special lines of research, not directly related to pinch work, which are suited to our particular equipment and experience. We have developed an analog technique, using rf and liquid sodium, to study the equilibrium positions and stability properties of various plasma configurations in the hydromagnetic limit. Another analog scheme, based on a specially designed electrolytic tank, is being used to find cylindrically symmetric force-free configurations. We have built a large 200-kilogauss magnet,[2] capable of being pulsed reliably at a high repetition rate, and have demonstrated it in a run with nuclear emulsions at the Bevatron. On the theoretical level, we have made contributions to the study of shock waves,[3] rotating plasmas,[4-7] plasma waves,[8] and cosmic-ray physics.[9]

---

[2] This project has been supported by basic physics research funds.

[3] Stirling A. Colgate, A Description of a Shock Wave in Free-Particle Hydrodynamics with Internal Magnetic Fields, UCRL-4829(Rev), Oct. 1958.

[4] Furth, Anderson, Baker, Bratenahl, Kunkel, and Stone, The Containment and Heating of a Rotating Plasma, Bull. Am. Phys. Soc. Ser. II, 4, No. 1, Part 1, PA6(1959).

[5] Anderson, Baker, Bratenahl, Kunkel, and Furth, A Hydromagnetic Capacitor, J. Appl. Phys. 30, 188 (1959).

[6] Harold P. Furth, Velocity and Current Distribution in the Homopolar, UCRL-5472-T [4506-41 CVL-11], Feb. 1959.

[7] Harold P. Furth, Three Ideas Relating to EXH Thermonuclear Machines, UCRL-5431-T [4506-41 CVL-10], Dec. 1958.

[8] Harold P. Furth, Ion Cyclotron Waves in Mirror Geometry. UCRL-5423-T [4506-41-CVL-12], Feb. 1959.

[9] S. A. Colgate and M. H. Johnson, Hydrodynamic Origin of Cosmic Rays, UCRL-5485-T, Feb. 1959.

SODIUM PINCH EXPERIMENT

A method has been developed for casting thin cylindrical shells of sodium inside a rapidly spinning mold. In the analog of the stabilized-pinch experiment an initial H_z of 15 to 40 kilogauss is set up inside a 3-in.-diameter sodium shell, and a compression of about 2:1 is achieved by passing a pinch current. At low levels of operation (15 kG) the H_z is entrapped, and the magnetic-probe signals look reasonable during the pinch cycle. The electrical conductivity is normal, and the only indication of unstable behavior is the appearance of small local fissures in the sodium shell. At high levels of operation (40 kG) the H_z escapes from confinement during the pinch cycle, due to development of a long helical tear in the sodium shell. The pitch of this helix seems to be consistent with the pitch of the magnetic field in the sodium, so that one might speak of an interchange instability. The data available at present are still insufficient to show whether the "instability effects" observed have a trivial origin, or whether they contain significant implications regarding plasma pinches.

A hard-core sodium pinch is being built, which will have H_θ on the inside of the sodium shell and H_z on the outside. This configuration is sure to be hydromagnetically stable. If the instability effects still persist, they must definitely be classed as trivial. If the effects disappear in the hard-core pinch but remain in the ordinary stabilized pinch, there may be significant implications regarding the plasma experiments.

"HARD-CORE" PINCH EXPERIMENT

In an ordinary pinch tube it is not possible to create current-carrying layers with H_θ on the inside. Therefore, the only configurations that have been studied are the dynamic pinch (with H_θ on the outside and plasma pressure on the inside) and the stabilized pinch (with H_θ and possibly a little H_z on the outside and H_z and plasma pressure on the inside). By making use of a solid conducting center rod, the Triaxial pinch experiment has succeeded in putting an H_θ on the inside of the pinch current layer, as well as an opposite H_θ on the outside. Another experiment that has been done is the inverse dynamic pinch (H_θ on the inside and plasma pressure on the outside).[10] All these configurations constitute rather limited special cases of the general pinch configuration, which has arbitrary values of H_θ and H_z on the inside and outside of the current-carrying layer.

A hard-core linear-pinch tube of 12 in. i.d. with a 2-1/2-in. center rod, has therefore been constructed, which is capable of creating the general pinch configuration. Special attention is being given to a number of heretofore unstudied cases which have H_θ decreasing as one goes radially outward, and H_z increasing. These configurations are expected to possess a high degree of hydromagnetic stability when H_θ drops sharply in the current-carrying layer while H_z increases sharply. Even if the transition is not sharp--that is to say, if the vacuum configuration is approximated--the configuration can still be hydromagnetically stable, provided the plasma pressure is not too high.

[10] Anderson, Furth, Stone, and Wright, The Inverse Pinch Effect, Physics of Fluids 1, 489 (1958).

In preliminary experiments we have shown that when a sharply defined and highly stable distribution is planned, nonetheless sore points develop, where the plasma- pressure gradient is excessive and the shear of the field lines insufficient to provide hydromagnetic stability.[11] Accordingly, as in the ordinary stabilized pinch, fluctuating and irreproducible probe signals occur, beginning near current maximum. When a smooth distribution is planned, approximating the vacuum configuration (so that the current density in the plasma is much lower), there are no erratic fluctuations in the probe signals, and the signals are perfectly reproducible from shot to shot over the whole pinch cycle.

It is therefore tentatively concluded that sharply defined magnetic-field distributions (high current densities) tend by some cooperative phenomenon to energize the plasma and distort the planned configuration to the point where the situation becomes hydromagnetically unstable. The cooperative phenomenon in question could, for instance, be related to electrostatic oscillations induced by runaway electrons.

In order to gain further information, we are initiating a thorough probe study of possible pinch configurations, at various pinch currents, in a variety of gases, and at different operating pressures. To complete this task in a reasonable time, we are making use of a multiloop probe setup, which was introduced in connection with the sodium experiment.

Ten magnetic-loop signals are displayed simultaneously on six oscilloscopes, and photographed. Extreme precision is required to avoid spurious effects due to relative miscalibration and misalignment of the probes. A technique has been developed for aligning the probes spatially to one part in a hundred, and adjustable compensators have been inserted into the RC integrators to correct for small discrepancies in probe areas. A circuit is being built to intorduce a fiducial mark on each probe trace, to insure reliable timing and calibration.

ELECTRON-BEAM EXPERIMENT

A pulsed electron gun has been completed which delivers 200 milliamperes of 200-to 300-kev electrons. A 3-in.-diameter linear stabilized pinch tube has been built which operates at 200 to 300 ka and has special features to allow transmission of the electron beam. At each electrode there is a mirror coil producing a mirror ratio of about 3:1 in the 5000-gauss initial H_z field. The electron beam is introduced through a 2-in.-diameter central hole in the electrode and onto any desired line of force, including lines of force that initially pass through the tube wall and are later drawn into the discharge in the process of pinching. The electron Larmor radius is sufficiently small so that electrons are essentially bound

[11] S. A. Colgate, D. H. Birdsall, J. P. Ferguson, H. P. Furth, and F. Halliday, A Study of the Generalized Pinch Configuration, UCRL-5490-T Abstract, Feb. 1959.

to lines of force. The introduction of the beam along the desired line of force is accomplished by a pulsed magnetic deflector, producing a field orthogonal to the initial H_z. There is also a movable slit system such that, by adjusting the slit position and the deflector timing, one can control the location of the admitted beam pulse in both time and space. The beam is received on a zinc sulfide phosphor protected by a thin foil, and normally forms a 1/8-in. spot there. Spatially unresolved photomultiplier studies made with the beam on axis show some transient attenuation when the pinch is operated. A series of space- and time-resolved photographic measurements, using the beam deflector, has just begun.[12]

PLASMA-ACCELERATION EXPERIMENTS

A program has been started to design the first stage of a pinch-type plasma accelerator. The energy source is our small matrix Marx bank, which is capable of 120 ka, rising in 1.5 μsec. A flexible system is being designed around a 3-in.-diameter metal-walled pinch tube. The discharge is of the rail type, starting at one end, where there is an insulated center electrode, and shooting out beyond the metal tube into a glass-walled observation section. Three interchangeable end-electrode and insulator arrangements are being built. In the first, the plasma is accelerated inward and forward, in the second, mainly forward, and in the third mainly outward and forward. An electronically controlled pulsed gas source has been developed, which permits the discharge to form near the input end and then accelerate into a vacuum region.

The ultimate aim is to produce a multistage rail-type accelerator, consisting of a series of metal pinch-tube sections separated by insulating rings, across which a series of fast capacitor banks is fired successively as the discharge front passes by. The effect is to accelerate the front continuously while immobilizing boiled-off wall material that may be trailing behind. (In the usual sort of rail-type plasma accelerator the energy source is applied at a single point, with the result that all boiled-off material between this point and the discharge front must also be accelerated if one wishes to accelerate the front.)

The beta pinch bank is being removed in order to make room for the accelerator project. A number of small banks using 15-kv 1-μf condensers of 0.5-μsec discharge time are to be installed.

---

[12] R. T. Spoerlein, D. H. Birdsall, S. A. Colgate, and H. P. Furth, Electron Beam Transmission Along a "Stabilized Pinch", UCRL-5489-T Abstract, Feb. 1959.

300-kv MATRIX MARX BANK

A 15×19-matrix Marx bank is being built similar in design to the 5×4 bank now in operation. The bank consists of 285 14-μf 20-kv condensers. The total energy of $8 \cdot 10^5$ joules maximum is to be discharged in about 2 μsec at 300 kv. Each capacitor has its own two-ball air spark gap, the pressure in which can be controlled remotely to allow operation at various bank voltages. Some difficulty was at first encountered in the simultaneous firing of spark gaps, due to the presence of large stray capacity in the bank. Test experiments that permit gap-to-gap ultraviolet illumination, have shown that the jitter time can be reduced to about 4-mμsec. Accordingly, the bank design is being modified to include the ultraviolet illumination feature.

The large matrix Marx bank is to be used in pursuing dynamic experiments that have proved promising on a small scale. For initial experiments, an 18-in.-diameter version of the screw-dynamic pinch tube has been built.

SODIUM-RADIOFREQUENCY ANALOG EXPERIMENTS

The NYU group has for some years been interested in developing an analog technique for studying hydromagnetic effects in various configurations, such as cusp fields. For this purpose, the use of rf and liquid metal was envisaged. Preliminary experiments at NYU encountered difficulty due to the large rf powers required to overcome gravitational and surface-tension effects.

We have recently developed a technique using liquid sodium and an oil of closely matched specific gravity, whereby gravitational effects can either be eliminated or included to any desired extent. The rf power required is modest (e.g., a few kilowatts at 10 kc or higher), and preliminary experiments have proved entirely satisfactory. A simple configuration has been studied, which involves an rf current-carrying rod dipped into a pool of liquid sodium, with a layer of oil on top. For this experiment the oil is chosen somewhat lighter than the sodium. The rf creates a funnel-shaped hole in the sodium, pushing against gravitational pressure. The liquid surface is found to be stable, as expected, and the contour of the funnel also agrees with theory. If the rf is applied in short bursts of repetition rate 20 to 40 sec^{-1}, then $m = 0$ instabilities are found to develop, with a wave length that varies with height in the funnel.

An apparatus has been built for creating cusp geometries, and various mirror machines will be studied next. The possibility exists of simulating $\beta < 1$ (in some respects) if one superimposes a dc magnetic field, penetrating the sodium, on the rf component which exerts the confining pressure.

STUDY OF FORCE-FREE CONFIGURATIONS

A 90×120-cm electrolytic tank, with a depth varying inversely as the distance from one side, has been built. This tank, together with two resistor networks attached at its deep and shallow ends, simulates a medium of conductivity=1/x. This scheme resembles the resistor networks developed at Princeton for plotting magnetic fields, but the use of an electrolytic tank avoids the graininess of the resistor network.

In order to find a contour corresponding to a cylindrical symmetric force-free surface, one uses a flexible copper strip as the contour to be determined, plus various other strips for boundary conditions, corresponding to force-bearing shells. The procedure is to find a position for the flexible strip where the nearest equipotential is everywhere equidistant from the strip.

The method has been used thus far to find contours for spools of finite length on which force-free windings can be put. This study incidentally solves the problem of what form stabilized-pinch equilibrium surfaces tend to take near the electrodes of a pinch of finite length.

200-KILOGAUSS MAGNET

Finishing touches have been applied to a 200-kilogauss pulsed air-once magnet of the Bitter type.[13] The useful volume is 2 in. in diameter and 3 in. in length. The field remains within 1% of maximum for 50 μsec. A 70,000-joule 13.5-kv capacitor source is discharged at 55 ka. Most of the energy is dissipated in external low-inductance resistors, into which the magnet is short-circuited at current maximum. The rest is removed from the coil by dry ice and silicone oil cooling. Coil life expectancy at present is about 7000 shots, and the chief aim of future research is to extend the life expectancy indefinitely. By use of several magnets, a Bevatron run of 15,000 pulses at a repetition rate of 11 per minute was recently completed without equipment failure of any kind. Eight stacks of nuclear emulsion were exposed to the K^- beam, four for White's group at Livermore, and four for Stork's group at UCLA. In this way our high-field magnet has served incidentally as an illustration of how Sherwood technology can open up new avenues in basic nuclear physics.

THEORETICAL WORK ON THE PINCH

A report has been issued extending the Rosenbluth analysis of gross stability of the infinite-conductivity pinch to include pinches with H_θ on the inside of the current-carrying surface.[1] It has been found that pinch configurations for which H_θ^2 internal exceeds H_θ^2 external are stable against all gross modes. The triaxial pinch, for which H_θ^2 internal equals H_θ^2 external, is stable against all gross modes except m = 0, for which it is neutrally stable. (An analysis of fine-scale hydromagnetic stability in the

[13] D. H. Birdsall and H. P. Furth, Pulsed 200-Kilogauss Magnet for Accelerator Experiments, Rev. Sci. Instr. (to be published).

generalized pinch configuration has been made by Kaufman and Newcomb.) It has furthermore been shown that a finite region of cylindrically symmetric vacuum magnetic field set up by a central conducting rod and an external solenoid (vacuum H_θ plus H_z), has a finite shear everywhere. Accordingly, it is possible to make a Stellarator on this principle. In the "Levitron" a toroidal conducting ring is levitated inside a toroidal shell by means of an H_θ (poloidal) magnetic field induced on it. An H_z (toroidal) magnetic field is simultaneously generated by external coils. Because of the gravitational pull on the center ring, the Levitron can be operated only as a pulsed Stellarator, but this disadvantage may be offset by higher tolerable values of "β" than in conventional Stellarators. The particular relevance of the Levitron concept to the pinch program is that it affords a vacuum-containment scheme whereby a hot initial plasma can be created prior to the passage of large pinch currents. In this way, it may be possible to avoid those instabilities which are due to a few energetic electrons running away in an otherwise low-temperature plasma.

In order to understand quantitatively the formation of the pinch-current-carrying layer (in the absence of instability effects), we have performed an elaborate calculation extending the zero-dimensional results of the Wylde-Watson treatment to the one-dimensional domain, which is relevant in the case of stabilized pinch formation. Plots of magnetic field, current density, ion and electron temperature, fraction of ionization, etc., have been obtained as a function of time for various starting conditions and applied electric fields. This project is essentially complete, and the results are being submitted to Physics of Fluids.[14]

THEORETICAL WORK ON ROTATING PLASMAS AND WAVES

The statistics of reaction and containment in a mirror machine with rotating plasma have been investigated.[2] It is found that the ratio of reaction power to particle-loss power can readily be enhanced by orders of magnitude thanks to the rotation. Operation at as low a temperature as 10 kv in DT is possible, if a rotational kinetic energy of 50 kv is superimposed.

The distribution of velocity in a rotating plasma inside a mirror machine has been analyzed, and the consequences for the electric field and charge distribution have been drawn. It is shown that, in the absence of mirrors, there is no viscous energy dissipation in the plasma except near material walls. In the presence of mirrors, there is still no viscous drag along field lines, but there is viscous drag across field lines. The radial current distribution during plasma acceleration has also been studied.[6] It is found that in a mirror machine of mirror ratio R the ratio of current density at the center to current density at the mirrors is $R^{3/2}$. Accordingly, the resistive power dissipation near the mirrors is R^{-3} times that at the center. This is an encouraging result from the point of view of protecting insulators located near the mirrors of the machine.

---

[14] S. A. Colgate, G. Gibson, and J. Killeen, Boundary-Layer Formation in the Pinch, (to be submitted to The Physics of Fluids).

An analysis of ionizing efficiency in the ion magnetron has been made, and a scheme has been devised for increasing the efficiency by providing multiple sheath regions.[7] This is to be accomplished by means of ring electrodes at the ends of the machine. The problem of using the ion magnetron as an ion source for a mirror machine has also been considered. A scheme has been developed for confining the high-voltage sheath to the ion-magnetron source, while permitting the circulating ion beam to be transferred to the regular mirror-machine region.[7]

The problem of creating and studying E_r-driven waves in a mirror machine has been analyzed.[7,8] In particular, the excitation of ion-cyclotron waves appears interesting. By exciting these waves with a radial electric field, one completely avoids the space-charge problems attendant on excitation with a solenoid surrounding the plasma. In addition, there is a special advantage in the mirror geometry, because the phase velocity of the ion-cyclotron waves decreases toward the center of the machine. Therefore, thermalization due to phase mixing is strongest at the center, and will be nearly complete if the local ion-cyclotron frequency is reached there. (The mirror machine is the perfect form of what the Princeton group refers to as a "magnetic beach.") A serious problem involved in the excitation of E_r-driven waves is how to get a radial potential across hot plasma leaking out the mirrors. A scheme has been developed for solving this problem by means of a tubular PIG discharge, defined by a ring cathode and two concentric anodes inside and outside the cathode. The oscillating voltage is applied between the two anodes. It is calculated that, because of the high impedance of the cathode sheath, the cathode ring will not shield the plasma from the oscillating E_r.

IV. BERKELEY PINCH PROGRAM

INTRODUCTION

William R. Baker

The Berkeley Sherwood effort, as the following individual progress reports describe, is concerned primarily with the sheet pinch as examplified by "Triax" and with rotating plasmas created in $E \times H$ "homopolar" geometries. No attempt is being made at present to define a practical thermonuclear device from these concepts, but the effort is rather to understand in more detail the physics of these moderately-high-temperature plasmas.

The sheet pinch work is being pursued in two complementary areas under Oscar Anderson and Wulf Kunkel. The rotating-plasma work, represented by homopolar machines II and III, is headed by Alex Bratenahl. Recently a program for investigating hydromagnetic wave propagation in a long homopolar geometry has been initiated under the direction of John Wilcox. A project under Robert V. Pyle has also recently been initiated, with the objective of studying the excitation and propagation of plasma oscillations at microwave frequencies and developing plasma diagnostic techniques based upon the understanding of these plasmas. A fairly detailed description of a low-pressure megampere pulse switch is included.

TUBULAR PINCH DISCHARGE (TRIAX)

Oscar A. Anderson, Melvin J. Bernstein, and Wulf B. Kunkel

The principle of the sheet-type pinch, and in particular the tubular pinch (Triax), was set forth in a paper presented at Geneva in 1958.[1] The two present Triax machines are described and experimental results up to February 1958 are given in a project report.[2]

The tubular sheet pinch without stabilizing magnetic field is still considered a highly interesting plasma configuration meriting further study. The main reason is perhaps that the predicted $m = 0$ instability mode has not been observed to disrupt the plasma and is probably not developing on the time scale of the present experiments. On the other hand, certain irregularities in the discharge behavior, which do occur when the energy input per particle exceeds a certain value, are not yet properly understood. These irregularities may be caused by nonmagnetohydrodynamic effects. At any rate they call for more experiments for clarification. The results will quite probably be of general significance for all high-current-density plasma work. In particular, there is hope that these difficulties will be overcome.

---

[1] O. A. Anderson, W. R. Baker, J. Ise, Jr., W. B. Kunkel, R. V. Pyle, and J. M. Stone, Sheet Pinch Devices, Second International Conference on the Peaceful Uses of Atomic Energy, Geneva, Switzerland, September 1958, Paper No. A/CONF/15/P/2349.

Work on the Triax configuration has been continuing along the two main lines set forth in UCRL-8153.[2] The first is concerned with detailed investigations of the features of the discharge at relatively low power levels, where the total energy supplied amounts to less than 2 kev per particle in the tube. Of course only a fraction of this energy is available for heating the gas. The second, with substantially more energy per particle available, concentrates on obtaining high temperature and exploring the nature of any undesirable plasma behavior under these conditions. Some general considerations should be described first, however.

General Analysis

Based on the assumption of perfect cylindrical symmetry, general expressions for the tubular-pinch-inductance and for the pressure-balance condition have been derived. In the approximation involving a thin plasma and small deviations from equilibrium relatively simple expressions were obtained for the tube inductance and for the current ratios on inner and outer return conductors. These expressions permit quantitative estimates of the following data from the purely external measurements of voltage, currents, and rate of change of currents:

(a) time taken to form the first pinch,

(b) average thickness of the plasma after the first compression,

(c) period and amplitude of compression oscillations after the first pinch,

(d) period and amplitude of the radial deflection oscillations of the plasma about its equilibrium position, and finally

(e) mean temperature of the plasma if the number of particles is known.

Accuracy of these values will of course not be very great, because of the approximations made and particularly because evaluation of the spatial quantities always involves finding the difference between two relatively large measured values. The quantitative estimates derived from observations in this way then may be compared with those predicted on the basis of idealized models for the pinch dynamics. For this purpose simple relations were obtained for

(a) time to form a sheet pinch, based on the snowplow model,

(b) period of compression oscillation, based on the speed of sound,

(c) period of radial oscillations, based on flux compression.

Work on the low-level Triax is largely concerned with verification of the ideas developed above. Wherever substantial agreement is found the model involved may be regarded as a fair approximation, and from then on results from the external measurements may be utilized for the evaluation of some of the quantities of interest, such as temperature and pressure even in the case of the high-level discharge.

---

[2] O. A. Anderson, W. R. Baker, J. Ise, Jr., W. B. Kunkel, R. V. Pyle, and J. M. Stone, The Triax Pinch Device, UCRL-8153, Jan. 1958.

Work on Low-Level Triax

A Triax tube of 50 cm length and 10 cm outer diameter, similar to the ones described,[1] has been in operation since Spring 1958. The only major modification involved the vacuum seal. In the new version the copper return conductors, rather than the quartz insulators, serve as vacuum jackets, so that the danger of insulator failure has been reduced. The maximum stored energy available was 20 kilojoules and the time to peak current was about 2.5 microseconds.

Pinch-Time Study

The first of the studies was concerned with a fairly careful verification of the snowplow model for the sheet pinch. Simple analysis predicts, of course, that the time to reach the first maximum compression of the plasma is proportional to the fourth root of the mass of gas per unit length of the tube, provided this time is short compared with a quarter cycle of the discharge. Experimentally, the instant of the first maximum compression was taken to be the time at which dV/dt observed between the driving electrode and ground had its first maximum negative value, i.e., $d^2V/dt^2 = 0$ (inflection point). Identification of this point with the time of the first pinch is based on the assumption that the current distribution at its maximum compression also has its maximum outward (expanding) acceleration.

The initial gas density was varied from 5.5 to 170×10^{-8} g/cm^3 by varying the pressure from 100 to 4200 microns and the molecular weight from 2 (H_2) to 40 (A). Other gases used were D_2, He, Ne, and N_2. The pinch times varied from 0.5 to 1.6 μsec. The longest of these times of course required a correction to the fourth-root law, since they no longer could be considered short compared with a quarter cycle of the discharge. The results were found to agree with the predicted values within experimental errors, which were judged to be fairly large--sometimes 20% or 30%--because of uncertainty in the mass determination at the low pressures and in pinch-time determination for large masses for which the instant of maximum compression was late and not clearly discernible. The general result was considered reassuring, however, and it is concluded that for many purposes the simple snowplow model is an adequate approximation.

Internal-Probe Study

An improved small movable magnetic pickup coil was used again in a manner as described earlier[2] for more accurate determination of the Triax current-density distribution. In a first set, reproducible discharges starting in cold, unpreionized gas of deuterium at 500μ pressure were used. The results essentially confirmed the earlier work, most of which was done at higher pressures. Subsequently, a similar study was undertaken at 300-μ pressure, this time, however, with a substantial preheat current provided for preionization and preheating of the gas. The preheat current rose to a peak value of 1.5×10^4 amp at 9 μsec. Unfortunately (in the light of later findings) the main discharge was started when the preheat current had reached its peak value. It was found that the reproducibility in this

case lasted only about 1.1 μsec, but otherwise the behavior was quite similar to the earlier findings, except for somewhat smaller amplitudes and shorter periods of oscillation. It was also noted that the plasma in its radial êxcursion tended to move more toward the inner quartz insulator than was seen before, never swinging back again past its expected equilibrium position. Such observations may indicate early gas evolution from the inner insulator, perhaps leading later to partial wall breakdown (end of reproducibility). In view of more recent discoveries concerning preheat-current optimization, these adverse results need not cause concern (cf section on high-level Triax); on the contrary, they might serve to clarify some earlier, misleading observations.

Symmetry Study

A number of external magnetic pickup loops, wedged between the quartz insulators and the copper return conductors, were distributed both around the perimeter and at various positions along the length of the tube. Their purpose was to reconfirm with more precision and over a wider range the earlier results which had demonstrated that the tubular pinch discharge indeed displayed the presupposed cylindrical symmetry. Unfortunately, in this particular case considerable deviation from axial symmetry was discovered in spite of the fact that the discharges were highly reproducible. The earlier inference that reproducibility guarantees symmetry cannot be upheld. It is thought that the quartz insulators, after long use and continued surface deterioration, provide irregular starting conditions for the pinch discharge. This deduction, however, has not yet been confirmed. It should be pointed out that whenever axial symmetry is lacking all derivations concerning tube inductance and the resulting information on plasma dynamics are in doubt. It is then only the striking reproducibility of all observed electrical signals which indicates the absence of gross instabilities.

Signals picked up along the length of the tube at a given azimuth, on the other hand, show good correlation except that near the electrode the compression-oscillation amplitude are seen to be smaller than far from the electrodes. Signals picked up on opposite sides of the plasma, one next to the outside and the other next to the inside return conductor and facing each other, show the damped short-period oscillations to be in phase and the slow undamped fluctuations to be out of phase with each other. This agrees well with the notion that the rapid oscillations must be due to plasma compressions, whereas the slower ones are clearly fluctuations in plasma position. On the basis of a simple model of pressure-wave propagation for the compression oscillations, a plasma temperature in the neighborhood of 20 ev is estimated from the observed frequencies. This value is not out of line with earlier estimates based on other information. The period of the radial oscillations, on the other hand, usually is found to be somewhat longer than would be expected from the inertia of the gas initially present in the tube. It is, however, not realistic to deduce a large increase in mass from these discrepancies, since the observed lack of symmetry makes the radial-oscillation model particularly unreliable.

A separate external loop, arranged to pick up any z component of flux (indicating the generation of azimuthal currents) gave essentially negative results except for very weak pulses synchronous with the strongest compression waves.

Anode-Bombardment Study

In a new investigation which has just begun, attempts will be made to measure the intensity and energy spectrum of energetic photons and electrons passing through a narrow slit in the anode. Preliminary work with a very crude analyzing chamber attached to the anode was hampered by insufficient differential pumping, excessive plasma penetration into the chamber, and unsuitable detection schemes. Yet it may already be concluded that in the first observations there was no evidence of large amounts of high-energy electrons reaching the analyzing chamber through a pinhole in the anode.

It is planned to extend all the diagnostic approaches described above to the high-energy-level Triax experiments as soon as facilities permit.

High-Energy Triax

The purpose of this section is to give experimental results obtained since February 1958 from the high-energy Triax, and to describe the new 10-inch-diameter Triax and the present status of its design and construction.

The high-energy Triax program evolved from an effort to produce enough neutrons for diagnostic purposes. This work started in late 1957 and culminated in an energy-shift measurement in the summer of 1958. Since then the emphasis has turned to other types of diagnostics in an effort to gain a better basic understanding of the plasma behavior. At the same time a great deal of development has gone into the tube and its associated low-pressure switch.

Neutron Energy Measurements

As described in UCRL-8153,[2] the program of increasing the neutron yield was all done with the same 25-kv 100-μf main condenser bank, but several types of tubes and preionizing arrangements were employed. The tube used for the energy measurements had ceramic insulators, 7 in. in large diameter, 3 in. in small diameter, and 8 in. long. The preheating bank was 24 μf at 20 kv with a discharge rise time of 12 μsec. It was found that maximum neutron yield was obtained by firing the main bank at the peak of the preheat current. Both banks were run with negative polarity. The tube was filled with D_2 at 150 μ Hg initial pressure. The peak current was 1.2×10^6 amperes.

Robert Good, John Ise, Jr., and Robert V. Pyle, using a high-pressure hydrogen-filled diffusion cloud chamber, attempted to measure the energy spectrum of the neutrons emitted. Calibration runs were made with neutrons from a pulsed D-D neutron generator, and it was found that the best results were obtained with 7 atmospheres of hydrogen, giving an experimental full width at half maximum of about 100 kev. The events were analyzed by reprojecting them on a space table and correcting for the temperature gradient in the sensitive layer, as well as for the scattering angle.

Because of the massive construction (with regard to neutron scattering) of the tubular pinch device and the low neutron yields (about 10^5 per pulse at 3-minute intervals) they have not calculated the energy spectrum, but rather have looked for directional effects by examining the shape of the upper-energy part of the recoil-proton spectrum. Measurements were made at each end of the pinch device as well as from the side, and the results are consistent with production from deuterons moving in the direction of the electric field, with average energies of about 1 ± 4 kev, and striking other deuterons at rest.

It was concluded that (a) within the accuracy of the experiment (variance about ± 4 kev in deuteron energy), the directions of neturon-producing deuterons appear to be isotropically distributed; and (b) the maximum neutron energy is the same as obtained during the calibration experiment to ± 3%.

The interpretation of these results is still somewhat open to question. It is no longer felt that under the above operating conditions the neutrons are of thermonuclear origin, although this hypothesis is not inconsistent with the above measurement or with most of the measurements described in UCRL-8153.[2] The difficulty is the large resistive voltage drop observed under neutron-producing conditions, which is hard to reconcile with high plasma temperature. On the other hand, there is lacking a reasonable theory to explain the large neutron yeild in the absence of substantial directed energy. Apparently the only other machine with a similar situation is the Los Alamos Scylla, in which the magnetic field configuration observed is quite similar to that in Triax.

Tube and Switch Technology

For the neutron-energy measurements just described the multi-megampere spark gap which had previously been used was replaced by a low pressure switch of greater reliability. (See section by William R. Baker, p. 4 .) This was so successful that a new Triax tube was designed (Fig. 1) which incorporated an integral low-pressure switch in an arrangement that reduced the circuit inductance to a new low value. This tube has been used for all the subsequent high-energy work. The most important advance in the design of the tube itself is the system of sealing the O rings to the quartz, in which the sealing pressure is applied pneumatically, as shown in Fig. 1. This technique removes the most common source of insulator breakage and is especially valuable with out-of-round or eccentric tubing. The other features are similar to those discussed in previous reports. The tube itself is 4 in. in large diameter, 1.5 in. in small diameter, and 24 in. long, while the switch diameter is 10 in.

The combination has been quite reliable with one exception. New Teflon rings had to be installed after 6 months, even on spare unused switches, because of vacuum leaks apparently caused by plastic flow. This does not seem a serious enough fault to warrant redesign of the existing switches, but switches being designed for future applications have had this effect taken into account.

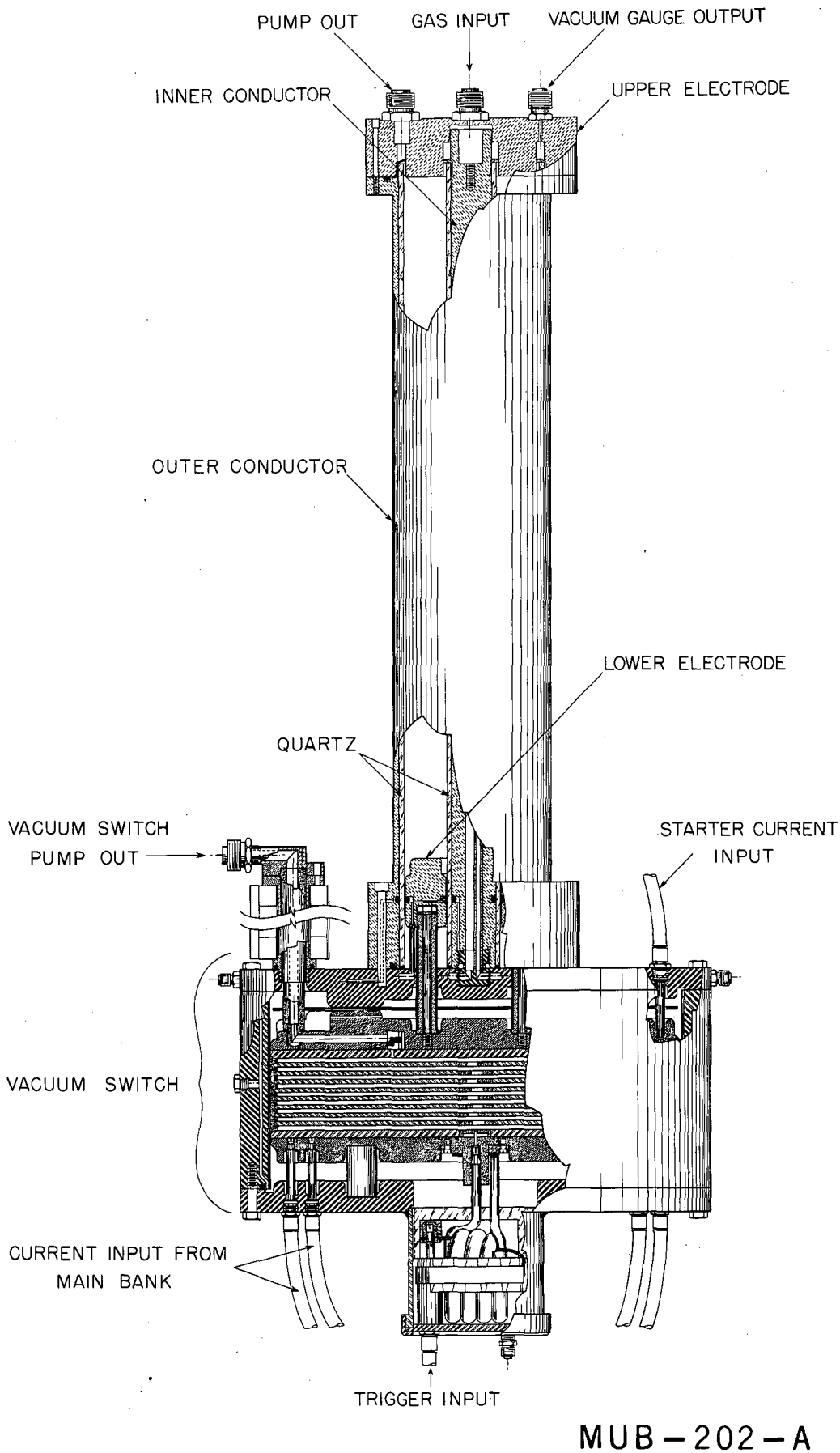

Fig. 1. 4-inch Triax combined with switch.

Finally, it is appropriate to mention here that a satisfactory method has been developed for preventing loss of air through the cables from the high-pressure region of the switch. The stranded center conductors of the RG-8 U cables are impregnated for several feet with nonhardening epoxy resin. Only a few hours are required to treat batches of 50 cables under pressure of 150 psi. The significance of this refinement is that now sulfur hexafluoride may be used without waste and higher-voltage operation is feasible.

Preionization and Preheating Experiments

It was mentioned above that the neutron production was maximized when a slowly rising (12-μsec) starting current was used and the main bank fired on peak current. However, these conditions were accompanied by a large resistive voltage during the main discharge, and a relative absence of pinch oscillations.

Recently measurements have been made with the new tube which show that the initial conditions for obtaining a low-resistance, well-pinched main discharge are quite different from those for obtaining maximum neutrons. First, external magnetic loops were used to determine the degree of azimuthal symmetry of the preheat-current density and a factor-of-two variation was found. By removing some inductance the discharge time was reduced to 3 μsec and this fault was corrected. However, according to the voltage signal there was still no improvement in the main discharge as long as it was fired on the peak of the preheat current (both polarities negative). This turned out, in fact, to be the least desirable time, the best being the zero-current point. (It has also developed that firing on peak is much more tolerable if the preheating bank is run positive, i.e., opposite in polarity to the main bank.) A self-saturating reactor has been installed which provides up to 10 μsec of zero current after the first half cycle of the preheat current. Trapped fields are thus permitted to escape and irregularities in the plasma to smooth out before the main discharge. Of course it must be determined experimentally how long a waiting period is necessary; clearly an excess is undesirable.

Present Status and Future Plans

The preionization and preheating experiments in progress, then, are intended to optimize the plasma formation and through this the duration of stable plasma containment. The parameters being varied are the energy and discharge time of the preheating bank, and the waiting time after its discharge before the main bank is fired. The most useful guide at present is the voltage signal, which indicates when things are going well by the appearance of pinch oscillations, and the converse by the early onset of a "resistive bump." Another experiment is planned utilizing the internal-magnetic-probe technique to investigate these effects.

Some time in the next quarter it is hoped that a completely new experiment will be in operation, the 10-inch Triax (see Fig. 2). Although a detailed description will be reserved for the next report, the general features may be summarized; Large diameter, 10 in.; small diameter, 4 or 8 in.; length, 8 in.; insulators, alumina; gaskets, indium; condenser bank, 200 μf

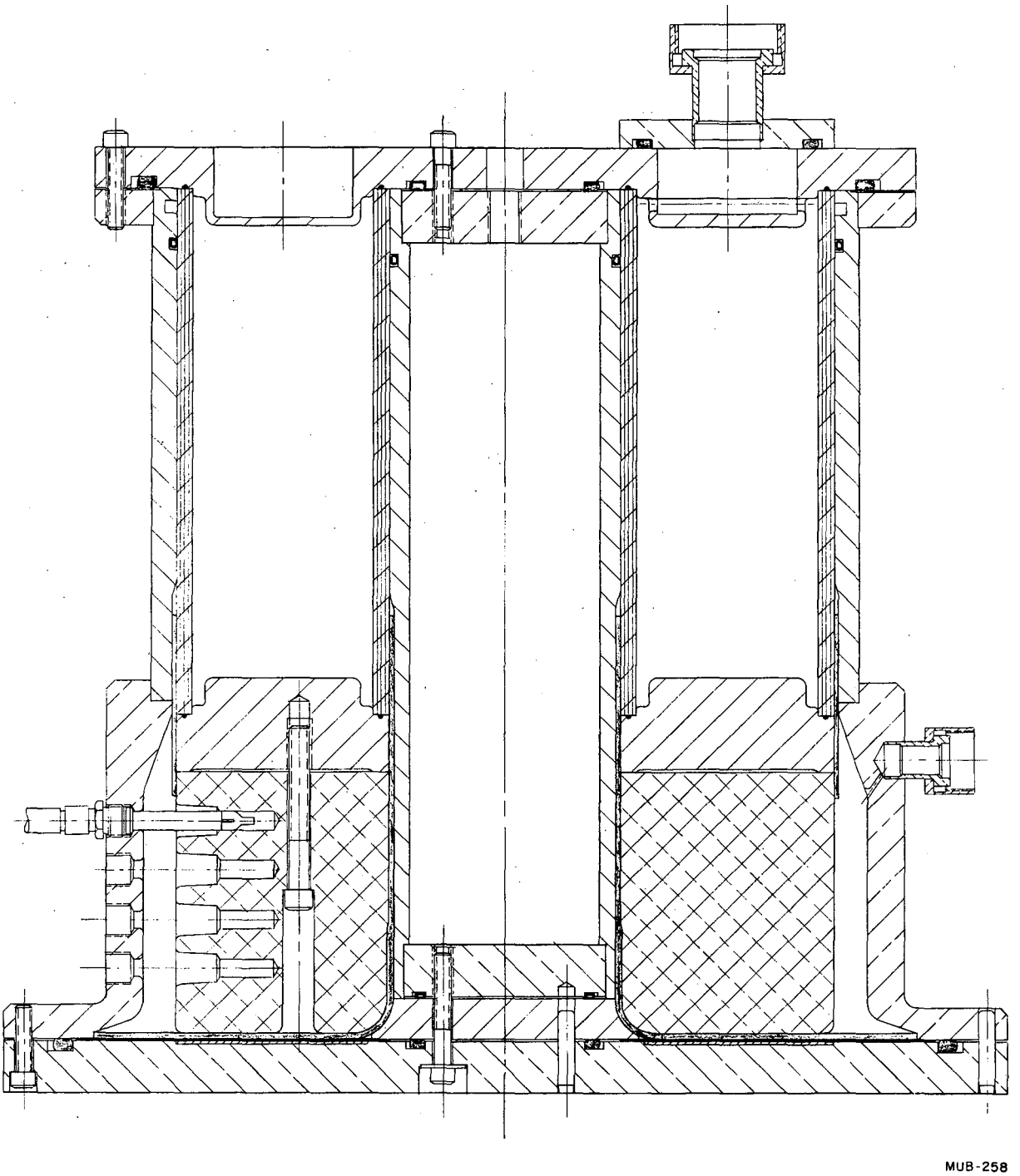

Fig. 2. 10-inch high-level Triax.

at 30 kv. The tube itself and the method of switching are intended to be especially flexible, permitting a wide range of diagnostics. The large size will make magnetic probes easier to use; new improved probe assemblies are under construction. At high levels, at which difficulties with internal probes may be met, boundary-type devices such as surface-current detectors and wall-pressure transducers will be employed. Provision has been made for efficient use of spectroscopes and cloud chambers.

The condenser bank has been built in four sections, and each will have a separate low-pressure switch. Thus, compared with a single-switch system, this cuts the available fault energy (to condensers or switch inputs) to one-fourth. The arrangement also will permit a variety of current wave forms and levels to be conveniently studied.

THE HOMOPOLAR DEVICE

Alex Bratenahl, William R. Baker, Alan W. DeSilva,
Wulf B. Kunkel, and Klaus Halbach*

The Homopolar Program began at Berkeley in 1956 with the discovery that a plasma with superimposed axial magnetic and radial electric fields can perform physically as a homopolar motor generator. The velocity of plasma rotation, more than 10^6 cm/sec, is well within the range where centrifugal force becomes important and values exceeding 10^7 g are easy to obtain.

The investigation of this powerful inertial force in addition to the conventional magnetic field as a means for containing a hot plasma became the immediate objective of the program. Subsequent theoretical studies[1-3] have provided encouragement in support of the basic concepts. A subsidiary objective has been to develop the purely homopolar aspects of the device as a very-low-inductance high-energy-density hydromagnetic capacitor.[4] Such a capacitor would be very useful for accelerating plasma to much higher energies than possible with conventional capacitors.

---

*Visiting UCLRL from Physikalisches Institute der Universitat, Freiburg, Switzerland.

[1] O. A. Anderson, W. R. Baker, A. Bratenahl, H. P. Furth, J. Ise, Jr., W. B. Kunkel, and J. M. Stone, The Homopolar Device, UCRL-8062, Jan. 1958.

[2] Anderson, Baker, Bratenahl, Furth, and Kunkel, Study and Use of Rotating Plasma, Paper No. A/Conf. 15/P/373, Second International Conference on the Peaceful Uses of Atomic Energy, Geneva, September 1958.

[3] Boyer, Hammel, Longmire, Nagel, Ribe, and Riesenfeld, Experimental and Theoretical Discussion of Ixion, a Thermonuclear Device, Second International Conference on the Peaceful Uses of Atomic Energy, Geneva, September 1958, A/Conf 15/P/2383.

[4] Anderson, Baker, Bratenahl, Furth, and Kunkel, Hydromagnetic Capacitor, J. Appl. Phys. 30, 188 (1959).

Up to the present , three units have been built and operated. Homopolar I provided most of the basic facts to establish and confirm a first-order theory. It was a small disc-shaped machine of approximately 400 cc volume driven by a 5-microsecond current pulse from a 10-kilojoule capacitor bank.

Homopolar II, of similar construction, provides a slightly larger plasma volume and a more flexible facility for detailed diagnostics. It has recently been at the disposal of a graduate student, so that in addition to its basic function it provides an excellent training facility for work in hydromagnetics and high-current discharges. Homopolar III, having a toroidal form and much larger proportions, represents an advance based on experience with the earlier models.

Homopolar II

The basic idea of the homopolar machine and the equations governing its behavior as a hydromagnetic capacitor have been described in a paper by Anderson, Baker, Bratenahl, Furth, and Kunkel.[4] The theory of the internal behavior of such a device has been presented in a UCRL report.[1, 2] The machine designated Homopolar II has been somewhat modified from the description given in that report. See Fig. 3.

The gap between the pole faces has been increased to 2 in., giving a working depth for the plasma of about 1-3/4 in. The field obtainable with this gap is 18.6 kilogauss and is very nearly uniform over the pole face. The inner and outer electrodes are, respectively, 3-1/2 in. and 17 in. in diameter. The center electrodes are buttons, insulated from the pole face by Pyrex plates 16 in. in diameter. The outer electrode is at ground potential, and the capacitor bank is connected through coaxial lines to the central electrodes. This arrangement was adopted to facilitate making probe and spectroscopic measurements. The 1/2-in. gap left between the outer edge of the Pyrex and the outer electrode provides a region of nonrotating gas which, it is hoped, will reduce drag at the outer electrode. The main capacitor bank is 96 μf and may be operated up to 18 kilovolts.

Most of the work done with this machine has been with argon gas, in order to slow the material motions down and thus provide for easier measurement and interpretation. The device of "crowbarring" the machine to measure the energy stored as rotational kinetic energy has been used as with earlier models. The present model has a considerably smaller surface-to-volume ratio than its predecessors, so that internal losses are relatively smaller. Voltage-decay time constants of 160 μsec have been observed. This time constant is of course, that of the bank capacity plus machine capacity with the machine resistance. Since under typical operating conditions the machine capacity is about one-third that of the bank, the observed time constant must be about four times the time constant for the machine itself.

The center electrode, as has been noted, consists of two discs, each 3-1/2 in. in diameter. It was found that when there was a slight imbalance in inductance of the lines feeding these two buttons the Pyrex insulator on the high-inductance side became eroded more rapidly than the other.

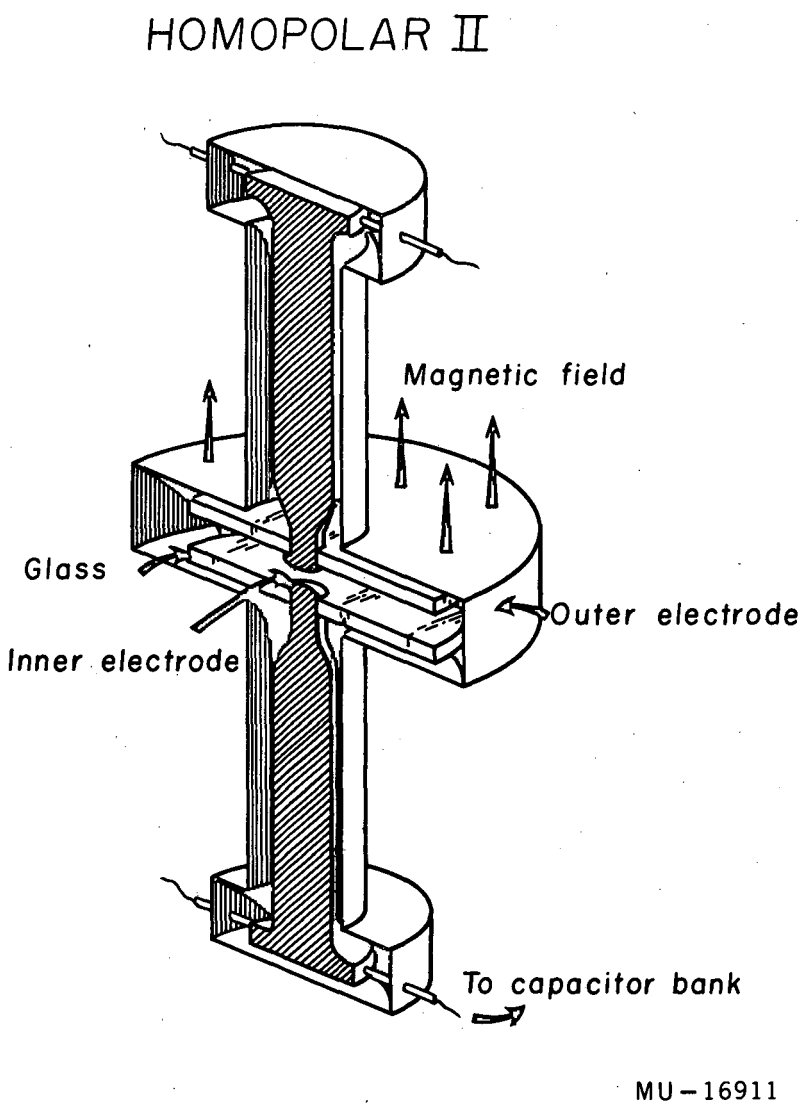

Fig. 3. Homopolar II schematic.

Pinhole-camera photographs of the pinched gas disc confirmed that balancing the inductances moved the disc closer to the center of the machine, and further erosion of the plates has been uniform.

The appearance of the insulators also suggested that only the central portion of the gas was spinning, and that the outer 4 inches or so of the insulator was shorting out. If this was true, then substitution of smaller insulating plates should make little change in operating characteristics. This was done and the results indicated that the outer portion of the gas was spinning. This conclusion has been borne out by later probe measurements.

Recently, the main emphasis has been on the development of a suitable set of probes to measure the magnetic fields within the machine. In particular, it was desired to learn the spatial and time dependence of the radial component of magnetic field. Attempts to measure fields with probes placed directly into the discharge region were not very successful. The probe coil must necessarily be very small, and even if the smallest available quartz tubing (2 mm od) is used to enclose it, it appears that the presence of the tube considerably alters conditions locally. Finally, the small tubing is not able to withstand the shock given it by the motion of the gas in any but a weak discharge.

The most satisfactory probe measurements have been made with small coils placed behind the glass insulators next to the pole face and therefore out of the region of moving gas. A series of seven of these coils has been put at various points behind the glass.

A number of interesting phenomena have been observed with these "spin loops." Unlike the signals from the smaller machine, the B_r signals are not smooth (see Fig. 4). The fine structure is not reproducible from shot to shot, but if signals from coils opposite each other on the top and bottom of the machine are compared it is seen that they are identical in every respect. This is reasonable, since coils so placed lie along a single field line. Any disturbance should propagate along the line with the Alfven speed, which in this case is around 10^7 cm/sec.

The dip that appears in B_r during the acceleration phase is not yet understood. It coincides very well with the current peak, and it seems probable that it is associated with the formation of the sheet pinch. This pinch effect is due to the B_θ field caused by the main current flow. Using a "snowplow" model, in which the current flows only on the surface of the gas disc and in which all gas is swept up by the advancing surface, one can calculate the time to form the pinch. The result is

$$t = \left[\frac{2rh}{I_0 \omega}\right]^{1/2} \left[3\pi\rho\right]^{1/4} ,$$

where h = gap width, r = radius, ρ = density, I_0 = peak current, and ω = frequency of input current. Putting in numbers appropriate to a typical experimental situation gives t=3 μsec at r = 8 cm, and t = 4 μsec at r = 18 cm. This corresponds very well to the observed null in B_r measured as a function

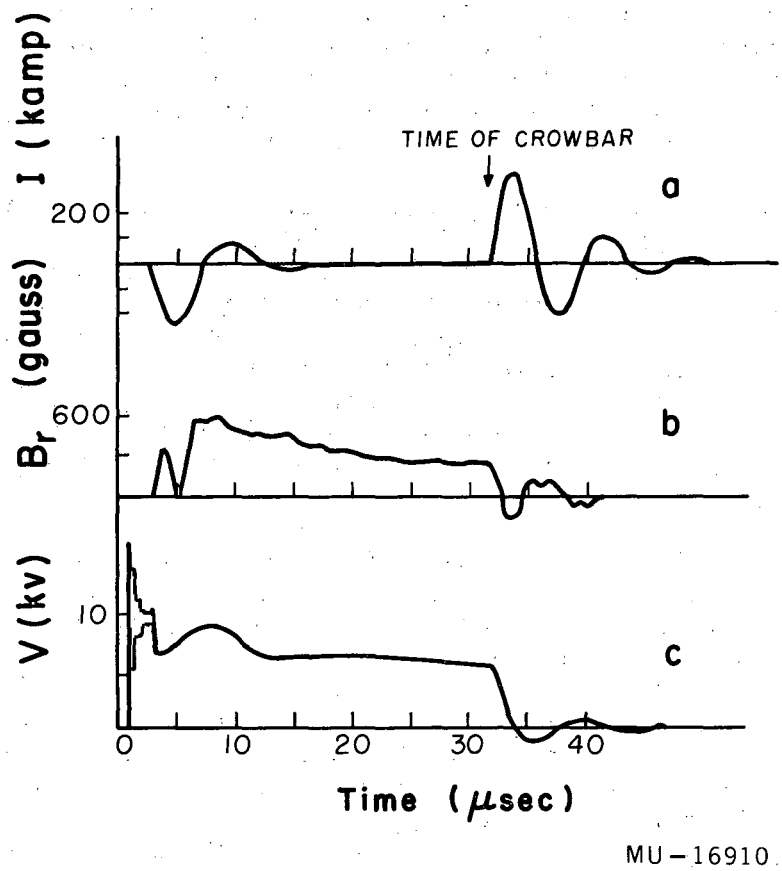

Fig. 4. Voltage, current, and spin loop signals.

of both r and t. The formation of the pinch at current peak is deduced from pinhole photographs, which show the pinched disc as a bright line in the center of the chamber. If the machine is crowbarred just before the current peak the line does not appear, whereas it does appear if the crowbar is applied just after current peak.

Coils have been used also to measure the B_θ field within the chamber. In broad outline, the field follows the total input current, but there is some local fluctuation, the extent of which has not yet been determined.

An attempt is now being made to determine the distribution of energy in the chamber and to make a gross energy balance. Planned future work includes an investigation of the momentum distribution in the rotating gas using a piezoelectric probe, and the use of current pickups on the outer electrode surface to determine the temporal and spatial distribution of current flow. A complete examination of the light output from the plasma is also planned.

Homopolar III

Homopolar III is a relatively new device. Since no adequate reference report has been written as yet, it seems necessary to begin with a very brief description.

In Homopolar I and II the important centrifugal force is parallel to the insulator, which is in the form of a disc. Moreover, the diamagnetic current resulting from the centrifugal force can be shown to be insufficient to maintain the plasma pinch away from these insulators after the initial current pulse. Homopolar III takes advantage of centrifugal force by employing a cylindrical insulator so placed that the centrifugal force acts always in a direction to expel the plasma from this region. In addition, the magnetic-flux surfaces are toroidal, providing a potential-energy trough into which the centrifugal force may drive the plasma. This magnetic field configuration, with its orthogonal electric field, is derived in a toruslike assembly (Fig. 5). Scaling laws suggested the construction of a rather larger machine in order that operating pressures could be reduced to the order of a few microns. The torus has a major diameter of 24 in. minor diameter 18 in. The volume is approximately 50 liters. The magnetic field of 5 kilogauss is supplied by a 5-kv 12,000-μf electrolytic capacitor bank of novel construction, providing a pulse rising to peak in 2.5 msec. The main discharge bank is 10 kv, 630 μf.

The general philosophy of Homopolar III is to provide a facility to investigate the containment of a hot plasma, taking full advantage of the centrifugal forces of rotation in combination with the magnetic field. A separate experiment is being initiated at this time to investigate the heating of a homopolar plasma. (See p. 58).

The machine was fully designed, built, and tested in the four months preceding the July shipping date for the Atoms for Peace Conference, Geneva, Switzerland, September 1958.

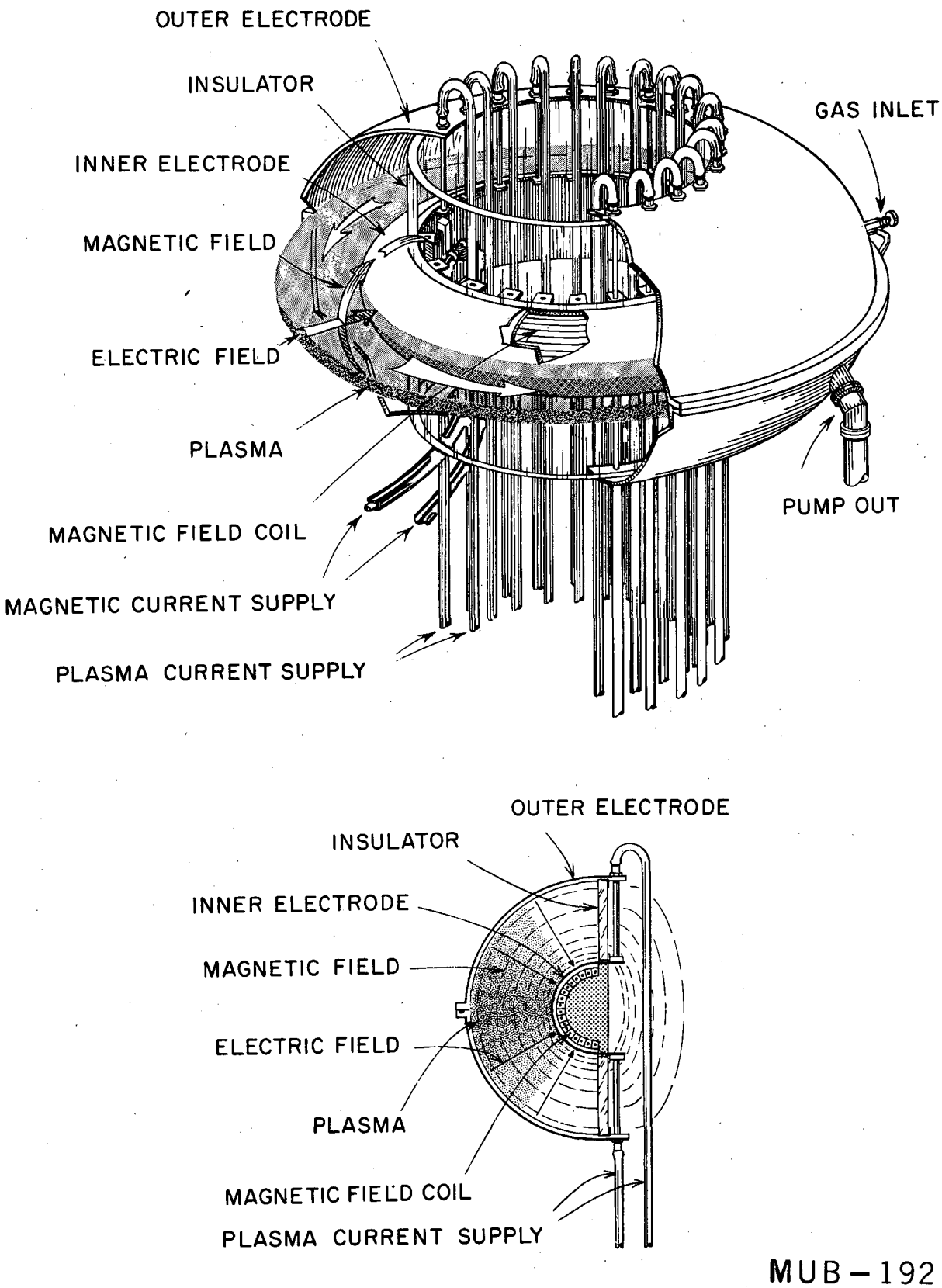

Fig. 5. Homopolar III.

From the beginning, the machine operated more or less as expected, including low pressure (5 μ D_2), and increased duration of the rotational state (500 μsec). In one important particular, however, operation was unsuccessful; the rotational state is at only 2 or 3 kv, which means that some factor is limiting the rotational velocity to the order of 10^6 cm/sec.

Three possible causes for this limitation have been recognized so far, but the steps taken to correct them will not be completed for another week or so. The magnetic field was plotted and the shape found to be rather grossly different from that intended. The field shape is easily corrected by auxiliary field coils. Without correction the extreme flux surface that just touches the inner electrode where it joins the upper insulator extends nearly halfway to the outer electrode in the equatorial region and returns to the inner electrode where it joins the lower insulator. Since this flux also tends to be an equipotential surface, this flux surface, rather than the intended metallic structure, actually serves as the inner electrode. Since the inner electrode is presently the cathode, excessive erosion and heating due to ion bombardment were evident in the region where this flux surface joins the electrode structure. The effect was greatly aggravated by the attendant outgassing of the insulator vacuum gaskets at these locations. The vacuum gaskets have since been relocated. The plasma between the cathode flux surface and the cathode proper cannot rotate, and probably performs as a PIG discharge. Although it is remarkable that the machine in its present state operates at all, it is encouraging to find such clearly defined and simple remedies.

Two current probes have been installed, one at 30°, the other at 60° to the equatorial plane. They consist of a 1-in.-diameter portion of the outer electrode, cutout insulated and shunted to the electrode through a 0.1-ohm low-inductance resistor. Voltage may be observed across the shunt. Preliminary results have been interesting and quite unexpected. The total discharge current typically rises to a peak of 40 kiloamperes in 25 μsec. However, the current received on the lower 30° probe appears first, some 10 μsec ahead of the current on the 60° probe, and is always some 10 times as strong. The duration of the current pulse on the upper probe is, correspondingly, 10 μsec shorter. The relationships vary with pressure in a manner to suggest that a mild pinch forms initially, but from the inside out--that is, current flow starts in the equatorial region and subsequently spreads outward from this central plane.

Following the main current pulse, a totally unexpected phenomenon appears. Sharp current pulses of about 1 μsec duration and amplitude of 6 to 10 kiloamperes appear at a repetition rate of 2 to 15 μsec, depending on the voltage across the machine. These pulses are not at all understood at present, but have a number of interesting properties that deserve further study. The main effort at present, however, is to identify their origin and eliminate them if possible, since they are obviously related to the loss of voltage across the machine, or, in other words to the limitation of velocity. It seems quite likely that these pulses will turn out to be related to the formation of an anode sheath which then somehow punctures periodically. The origin of these pulses should become quite clear during the next few weeks.

HIGH-CURRENT SWITCH

William R. Baker

The problem of switching the megampere-range pulse currents encountered in our fast pinch work at Berkeley has received considerable attention for several years. Early methods usually used some form of spark gap or system of gaps operating at or above normal air pressure. Triggering was effected mechanically by motion or pressure change, or electrically by using a transient overvoltage, a third electrode, or a shock wave. Even after years of experience and development these arrangements presented a constant maintenance problem that frequently amounted to more effort than the experiment itself.

The low-pressure switch shown here in schematic form (Fig. 6) has proved an excellent solution to such problems. One of these switches has been cycled more than five thousand times on a Triax pinch tube without appreciable erosion of the active regions. All three of our operating exhibits at the 1958 Geneva Atoms-for-Peace Conference used switches of this type. In the near future we will attempt parallel operation of four such units into a fast pinch load at approximately four million amperes.

The schematic diagram shows the more important features of one of the latest designs. A series stack of eight 6-in.-diameter stainless steel discs, M, each having a tire-shaped Teflon insulator L around its periphery, is compressed by solid end electrodes, K and N, to form a vacuumtight assembly. A 5% compression of the Teflon is within the elastic limits and gives the required seal if the mating surfaces are smooth and clean.

The system of 1/8-in. gaps between discs is interconnected by a series of staggered 3/8-in. holes, each 3/16 in. off center, and is evacuated continuously through an insulating tube P by an ordinary forevac pump such as a Kinney KC 15. A needle valve (not shown) sets the operating pressure of air inside the switch at approximately 10 μ. Air is found to be the most satisfactory. If the gas in tube P becomes ionized it forms a short circuit across the switch output. This is prevented by the baffle system C that prevents plasma from the switch from entering tube P, and by a magnetic ion trap A that deflects occasional ions into the tube wall. This pumpout tube is always located on the output side of the switch to minimize electrical breakdown troubles. The discs are surrounded by a cylinder of Mylar, D, to insulate them from the switch housing. A layer of vinyl along the inside surface of the Mylar helps to distribute the potential uniformly because of its relatively lower volume resistivity. This is particularly important on the input side and in the disc region.

Axial centering and compression are supplied by a cylindrical alumina insulator C between each electrode and the adjacent end plate of the housing. Fifty RG-8 U cables, H, spaced uniformly in a double row around the periphery of the input electrode, K, connect this electrode to the capacitor bank, which with this switch is typically 50 μf at 30 kv. A similar system of cables connects the output electrode N to the load. All cable shields connect to the switch case, and the entire system is surrounded by a current-return surface

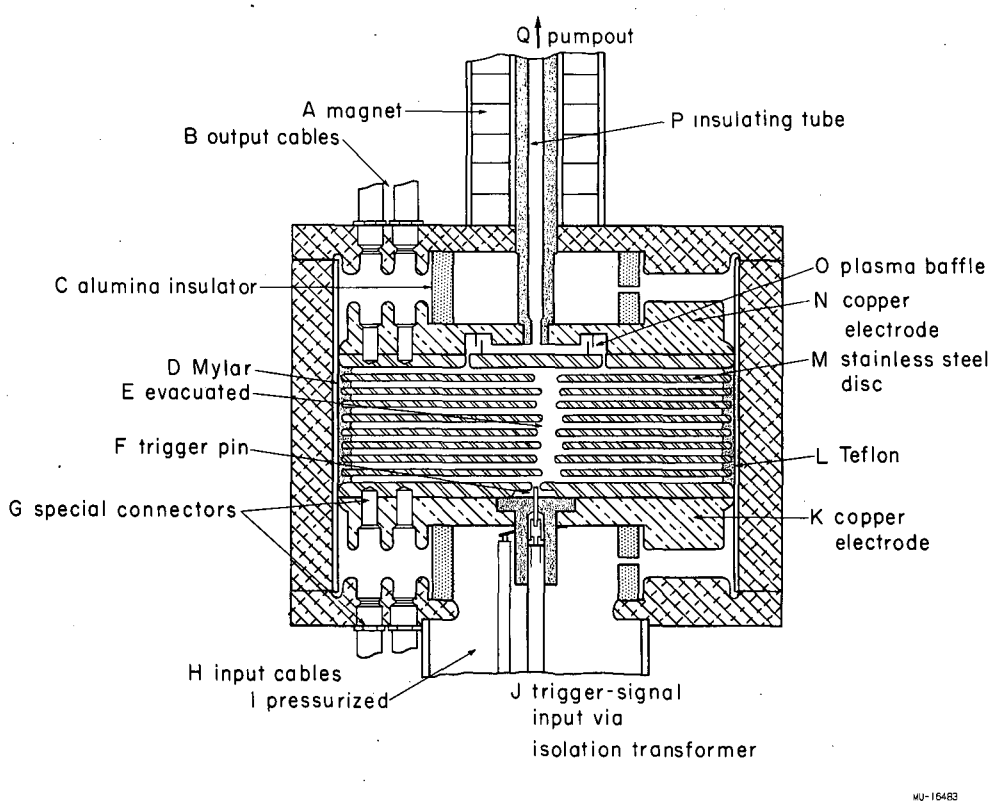

Fig. 6. High-current switch schematic.

at ground potential. The regions between the switch electrodes and case are pressurized to 30 psi with freon-12 or sulfur hexafluoride so that the higher dielectric strength permits a compact low-inductance structure. The switch is polarity-sensitive in that it is triggered by a spark source of electrons at the negative electrode K just opposite the central hole region. This is initiated by a 30-kv signal from a 5C22 hydrogen thyratron pulser coupled to the trigger pin F through an isolation transformer (not shown).

By using the maximum number of cables that can be conveniently brought to the switch electrodes, we can make the inductance reasonably low; for the 50-cable system used here it is 1.5×10^{-9} henry/ft. Special connectors (not shown) were developed for the terminations. These are good for pulse currents of 5×10^4 amperes, and in addition provide the required pressure seal and are easy to use.

The total applied dc potential divides reasonably well between the discs by a combination of leakage currents through the low-pressure region and the Teflon and vinyl insulation at the edges. This voltage division prevents ions from being accelerated to more than the interdisc voltage, which is insufficient to produce enough ionization at the metal surfaces to cause breakdown. Also, the distance between discs is well within the mean free ionization path in the low-pressure gas, and ionization will not occur there. The holes in the stainless steel discs are offset to prevent ions from gaining the full 30-kv switch potential and yet permit the triggering action, as will be described later. Tests indicate that this disc system can be operated to approximately 5 kv per section.

These conditions apply initially and permit holding off dc voltages for indefinite times; it is also true that, once the gas is ionized, there are enough current carriers in the resulting plasma between the discs to carry many millions of amperes. It is necessary to provide only a small initial amount of ionization, and the remaining neutral gas very quickly ionizes and conducts whatever current the circuit can supply. Early work showed that the critical plasma density required to start such a switch can be established at this pressure range by electron currents through the gas of the order of a few microamperes per cm^2.

The mechanism by which the cathode spark triggers this multidisc switch is not fully understood, and the present arrangement has been determined empirically. A study was made of tube performance vs. the degree of rotation of the holes in alternate stainless steel discs. With alternate holes rotated 180°, the trigger would not initiate breakdown even with 40 kv applied. A compromise at about 70° permitted 30-kv operation and triggering in 10^{-7} sec with a considerably smaller jitter time.

The delay is sensitive to pressure and to the gas used. As vacuum is approached, the delay and jitter increase greatly. Air is much better than hydrogen or helium. Delayed (cumulative) effects on triggering time for a different gas indicate that the metal surfaces around the holes are perhaps involved in an electron-multiplier action. By some such means, electrons from the spark are able to give the critical value of ionization to the gas in this region.

Measurements of the inductance indicate that the discharge under normal service spreads in approximately 10^{-7} sec from the central hole region to the Teflon surfaces where it remains through the conducting cycle. A value of approximately 2×10^{-9} henry was indicated for a 12-in.-disc system. The 6-in. switch described here should have an inductance about twice as high.

The Teflon provides two other important features besides insulating the discs and holding them in place. Hot plasma from the switch action vaporizes a small layer of the Teflon surface. This prevents pinching and holds the current at the surface, which is the lowest-inductance path available, and also keeps the insulator free of conducting deposits. The breakdown products are apparently all gaseous and are removed in a few seconds by the pump. A pressure burst of 20 to 40 microns, when the switch is fired, is a good indication that the Teflon surface will remain clean. Insulator erosion is insignificant after 5000 operations.

It is a pleasant and unusual condition to find that the current range of this switch is limited on the low side and not on the high. A value of 10^4 amperes per square inch of disc area seems to be a lower limit. Below this the switch becomes erratic and the voltage that it will stand off drops rapidly to a few kilovolts. The upper limit has not been reached with any of the switches that we have tried, and they apparently prefer megampere pulses as a steady diet.

A practical limit does exist, however. All the capacitors connected to a switch are necessarily connected to one another. If one shorts, then the energy from the others flows into this short. If more than about 2×10^4 joules are involved there may be an expensive explosion. For higher energies it seems advisable to use several small switches, each with its own capacitor bank, rather than one large switch. These switch units are connected in parallel on the output side only. An alternative solution would be to develop a fuse for individual capacitors which would permit the use of one large switch. Nothing in this line appears promising as yet.

The work on the low-pressure switch at this Laboratory in 1948 had produced a system of glass insulators and baffles that worked to approximately 10^5 amperes but failed at higher currents because of conducting deposits on the insulators.[1] Sloan, of the University of California Microwave Laboratory, carried the work further as a pulse-line switch,[2] and attempts were made here in 1955 to use it to drive fast pinches. The present arrangement came soon after the Sherwood group at Los Alamos found that Teflon insulation remained clean in a high-current vacuum switch.[3] Without this idea the present switches would be impossible.

---

[1] Baker, Kerns, Riedel and Edwards, High-Current, High-Voltage Gas Discharge Tube. AECD-2634, July 14, 1948, and related U.S. Patents No. 2512538 and 2535886.

[2] Gardner, Sloan, Marshall, and McBride, High Power Pulse Line Switching Devices. Final Report, Series No. 5, Issue No. 10, Microwave Laboratory, University of California, April 1, 1952.

[3] Private communication, Los Alamos Sherwood Group.

The low-pressure switch is completely silent even at 2×10^6 amperes, which is the single-switch current limit so far reached. It is a welcome change from the deafening noise of spark gaps, which we would otherwise be using.

While the present design represents by far the best solution that we know of for the megampere pulse range, many improvements are indicated. Most of our troubles have been in the pressurized regions, and a far superior system would be to develop practical methods for using solid insulation such as polyethylene throughout. This involves an electrical seal between cable and switch insulation systems. Electrical seals are similar to vacuum seals in the mechanical tolerances required but have the added requirement of seal depth. It must be rated in "volts per mil" of seal depth, and to be practical for the switch described here this would have to amount to at least a 60-kv total. Some preliminary experiments are very encouraging. We are confident that a practical scheme will be found in the next few months.

The solid insulation system will also lower the switch inductance greatly, since in the present design most of the inductance is in the gas dielectric region. An estimate would put the new value at less than 10^{-9} henry for the 6-in. disc size.

An improved pumpout system would be desirable also. A single electrical breakdown in this region during operation explodes the pumpout tube and greatly damages the surrounding cable insulation. A program aimed at finding a better answer is under way, and one promising scheme has been found. We have been able to make a pumpout channel approximately 1/8 in. in diameter by 3 in. long that can stand off 60 kilovolts dc at a pressure of more than 200 microns.

EXPERIMENTAL INVESTIGATIONS OF WAVES IN PLASMAS

Thomas K. Allen,* Robert V. Pyle, and John M. Wilcox

Two experimental investigations of waves in plasmas were started recently. The first concerns hydromagnetic wave propagation at frequencies close to the ion-cyclotron frequency. If the energy of such waves can be transferred to a plasma that is contained in a mirror machine, there are a number of possibly important advantages over conventional types of heating:

(a) the energy is easily introduced into the desirable region of the device,

(b) the ions are heated directly,

(c) the momentum that is initially given to the ions is perpendicular to the magnetic field; therefore the containment by the magnetic mirrors is good,

(d) the efficiency of the energy transfer should be high.

---

*Visiting Lawrence Laboratory from AERE, Harwell.

The second investigation is concerned with the propagation of electromagnetic and electrostatic waves in plasmas, from the standpoint of plasma diagnostics and as a more fundamental study of slow-wave propagation.

In the process of heating a confined plasma to high temperatures it would be most desirable to heat the ions directly rather than through the two-step process involving the electrons. In principle this can be done by applying suitable electric fields which vary in resonance with the ion motion. In a series of papers T. H. Stix and his associates have examined the generation and propagation of hydromagnetic waves at frequencies close to the cyclotron frequency, and they have been able to show theoretically and experimentally that the ions in a plasma can be heated efficiently by the absorption of such waves.[1-5] A theoretical and experimental investigation of the possibility of ion heating with rf at the cyclotron frequency was carried out at Livermore[6] and it was concluded that "ion heating by the application of a radiofrequency electromagnetic field to a plasma has been demonstrated" in a mirror-machine configuration with both azimuthal and (asymmetric) radial rf electric fields. However, it is likely that only part of the plasma was absorbing the energy in the Livermore experiments; the main problem in this type of heating is to enable the heating field to penetrate the plasma.

It was suggested by Harold P. Furth that the propagation and absorption of torsional hydromagnetic waves of a type similar to those described by Stix might provide an excellent heating mechanism[7] for the plasmas which are so efficiently created and contained in the "homopolar" rotating-plasma devices (see p. 46). To investigate this possibility an experiment is in progress which makes use of the geometry shown in Fig. 7. A copper pipe is enclosed by a magnet 4 ft long and 9 in. in id which can be adjusted to have mirror fields at the ends and possibly a dip in the field near the center; the maximum average field is 9 kilogauss. Insulating discs seal the ends of the tube and also support the short electrodes (or a solid rod along the axis). The proposal is to strike a discharge along the axis (or use a solid rod), apply a radial electric field to complete the ionization and set the plasma into rotation, and then connect a rf signal between the center electrode and the outer conductor. In principle, a torsional hydromagnetic wave will

---

[1] T. H. Stix, Phys. Rev. 106, 1146 (1957).

[2] T. H. Stix, Phys. of Fluids 1, 308 (1958).

[3] T. H. Stix and R. W. Paladino, Phys. of Fluids 1, 446 (1958).

[4] T. H. Stix, in Papers Presented at Controlled Thermonuclear Conference, Washington, D.C., Feb. 1958, TID-7558, Oct. 1958, 264, 389.

[5] A. Lenard and R. Kulsrud, ibid., 402.

[6] E. S. Chambers, A. A. Garren, D. O. Kippenhan, W. A. S. Lamb and R. J. Riddell, Jr., Cyclotron Resonance Heating of a Plasma in a Magnetic "Mirror," UCRL-5286, June 1958.

[7] Harold P. Furth, (UCRL) private communication.

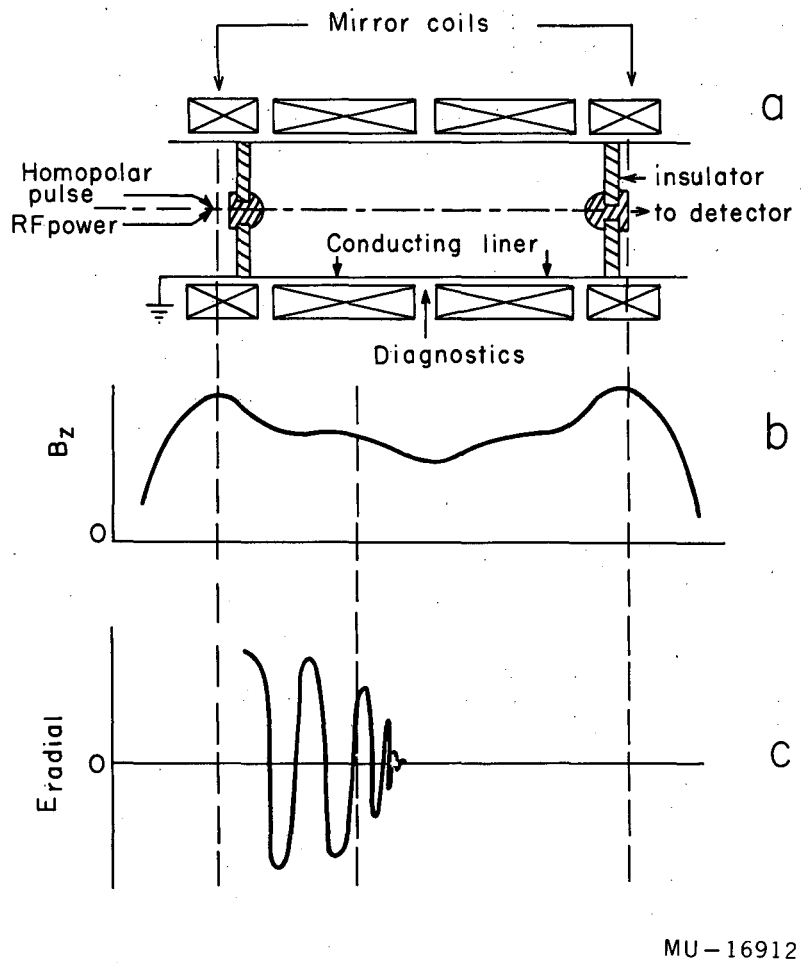

Fig. 7. Hydromagnetic-wave propagation experiment.

propagate along the axis, and if the applied frequency is considerably below the ion-cyclotron frequency the velocity of propagation will be the Alfvén velocity, and a standing hydromagnetic wave will be set up in the plasma. If the magnetic field is reduced near the center of the machine until the ion-cyclotron frequency is equal to the applied frequency, the wave should be attenuated and the ions heated.

To be more specific, assume that D_2 is introduced to a pressure of p microns of Hg, and then fully ionized. The plasma has a dielectric constant[8]

$$\epsilon = 1 + \frac{4\pi\rho c^2}{B^2} = 1 + 2.95\times10^{-9}\ \frac{c^2}{B^2}\ p \approx 2.95\times10^{-9}\ \frac{c^2}{B^2}\ p.$$

The velocity of propagation of the hydromagnetic wave is then

$$V \approx \frac{B}{\sqrt{p}}\ 1.84\times10^4 \text{ cm/sec},$$

for frequencies well below the deuterium ion-cyclotron frequency: $\nu_c = 770$ B. For example, at $B = 10^4$ gauss and p = 100 microns, $V = 1.84\times10^7$ cm/sec; this should be observable. The ion-cyclotron frequency at this field strength is 7.7 megacycles, and for a slightly lower applied frequency the wave length in the plasma would be about 2.5 cm. It may therefore be possible to produce the situation shown in Fig. 7c, where the wave energy is absorbed near the center of the machine.

The present experimental effort is toward establishing a plasma suitable for the propagation of these waves; at the same time, a theoretical study, including the effects of possible sheaths at one or more of the electrodes, has been started.

To aid in this research a microwave diagnostic program has been established using apparatus at 8-mm and 1-cm wave lengths,[9] and a preliminary study of the propagation of slow electrostatic waves in plasma devices has been started.

---

[8] H. Alfvén, Cosmical Electrodynamics (The Clarendon Press, Oxford, 1948).

[9] We are indebted to C. B. Wharton of the Livermore laboratory for the loan of the initial microwave equipment.

V. THEORETICAL RESEARCH

HIGH-ENERGY INJECTION

Warren Heckrotte and John Killeen

An investigation of various proposals for high-energy injection of particles into mirror machines is in its preliminary stages. The first steps have been concerned with the plasma build-up and the burnout of the neutral. As many practical considerations as possible have been incorporated at the moment, such as wall loading and the pumpout efficiency of the slow ions. More detailed questions such as ion and electron temperature, spatial distribution, etc, have been given only cursory attention as yet. The effect of slow ion-electron recombination has a possible serious effect on the neutral burnout and we have begun to consider this.

BOUNDARY-LAYER FORMATION IN THE PINCH

Gordon Gibson and John Killeen

A study is being made of various processes that occur prior to the pinch effect when an electric field is applied to a deuterium gas. The variables of the problem are the percentage of ionization, the electron and ion temperatures, the resistivity of the gas, and the current density. We consider a one-dimensional problem, i.e., the above variables are determined as functions of one space dimension and the time. The equations determining these variables are: that for the heat developed as the current flows through the gas, which equals the rate of increase of the internal energy of the plasma; the equation describing the rate of ionization, the equation describing the rate of transfer of energy from electrons to ions; and the electromagnetic field equations. These equations are a generalization of the plasma equations solved in the paper by Wyld and Watson[1] in that spatial dependence is included, i.e., one calculates a current layer instead of assuming a constant current. The boundary condition for the current density is derived by taking the electric field at the wall to be the constant applied field and an inductive term. The equations are solved numerically by using an IBM 704 computer. Four cases have been completed. The parameters varied are the applied electric field strength, the particle density, and the value of the inductive term in the boundary condition.

CIRCUIT DYNAMICS OF THE PINCH

John Killeen and B. A. Lippmann

Instead of analyzing in detail a portion of a hydromagnetic pinch apparatus and replacing the remainder by a boundary condition, we treat the entire pinch apparatus as a single dynamical system. A circuit equation and

[1] N. W. Wyld and K. M. Watson, Ionization and Heating of a Plasma in a Magnetic Field, Proceedings of the Gatlinburg Sherwood Conference, 1956, TID-7520, p. 335.

a mechanical equation, coupled together, result. These equations describe the dynamical development of the pinch and exhibit explicitly its dependence on the physical parameters (electrical and mechanical) of the system. As examples, the equations have been used to analyze the snowplow model and the adiabatic pinch, yielding curves that show the geometrical development of the pinch in time, as well as the distribution of mechanical and magnetic energies at any stage. Analogous analyses may be made for other physical quantities of interest, and can be used to adjust the parameters of the system so as to optimize specific pinch characteristics.

THE HYDROMAGNETIC STABILITY OF THE TUBULAR PINCH CONFIGURATION

Allan N. Kaufman

The hydromagnetic stability of the tubular pinch configuration has been investigated, in collaboration with William Newcomb. The results are reported elsewhere.[2] It is found that complete hydromagnetic stability can be obtained for certain types of configuration; the most promising is that in which B_θ drops appreciably across a thin current layer, but does not change sign.

Whether such stable configurations can be achieved is another matter. Two theoretical studies bear on this point:

(a) The effect of differential ohmic heating is to cause a redistribution of current density in such a direction as to eliminate stability. (Preliminary experimental probe measurements indicate qualitative agreement.)

(b) The concept of the static pinch (in which radial diffusion is balanced by the $\underline{E} \times \underline{B}$ drift) has been applied to the tubular geometry. This type of pinch is of interest because its configuration is time-independent; however, it is found to be hydromagnetically unstable.

As a result of general misunderstanding of the meaning of the viscosity coefficients (in a strong magnetic field) an effort is being made to derive them from considerations of particle motion. This is to supplement a previous derivation from the Boltzmann equation. A paper discussing viscosity from several points of view is in preparation.

MECHANISM OF ELECTRON LOSS IN THE MAGNETICALLY STABILIZED TOROIDAL PINCH

Marvin Mittleman

The observation of runaway electrons in a toroidal pinch[3] and the apparent absence of containment has led to a search for the mechanism for their loss. We look at the following idealization: A single electron moves

---

[2] Allan N. Kaufman and William Newcomb, Hydromagnetic Stability of a Tubular Pinch, UCRL-5434, Dec. 1958.

[3] Colgate, Ferguson, Furth, The Stabilized Pinch, Proceedings of the Second International Conference on the Peaceful Uses of Atomic Energy, Geneva, 1958, Paper No. 369.

rapidly along the magnetic field in a uniform plasma of infinite extent. We see that the electron must excite oscillations in the plasma (Cherenkov radiation). These oscillations are primarily high-frequency ones (ω is greater than the plasma frequency). They must absorb energy from the electron. Thus we see that the runaway electron excites oscillations in the plasma which will make subsequent electrons behave nonadiabatically and permit their loss. Further, if we estimate their containment time from the known electric field and from their energy upon collision with the walls, we see that it is underestimated by the neglect of the above effect.

The difficulty is that this effect is too small to account for the observed results. We may conjecture that this is because runaways do not arise singly but there are cooperative effects among the runaways (such as bunching) which permit them to radiate coherently. This would increase the magnitude of the radiation effect by roughly the square of the number of runaways.

HYDROMAGNETIC STABILITY IN LINEAR AND TUBULAR PINCHES

William A. Newcomb

Necessary and sufficient conditions have been derived for the solvability of a magnetic differential equation for the hydromagnetic stability of a diffuse linear pinch and for the hydromagnetic stability of a sharp tubular pinch (with Allan N. Kaufman).

VI. ENGINEERING AND TECHNOLOGICAL DEVELOPMENT

ULTRAVACUUM DEVELOPMENT

Norman Milleron and Leonard L. Levenson

Three major areas are being investigated:
(a) "black hole" pumping and beam catching,
(b) clean pumping with diffusion pumps, and
(c) complementary vacuum techniques (static and motion seals, gaskets, valves, windows, electrical lead-ins, etc.).

Let us examine the first two areas. Two separate but related pumping investigations are indicated because of known limitations on diffusion pumps and indicated limitations on unconventional pumps. (Invention of a new pump could of course change the character of these investigations completely.) That diffusion pumps will fall into disuse is not envisioned nor that diffusion pumps will, by themselves, satisfy the "black hole" requirements. (For some previous discussion see UCRL-5258 and UCRL-5259.)

For "black hole" pumping and beam catching, we have at least the following possibilities:

(a) Gettering of neutral gas by evaporated or sputtered coatings.

(b) Gettering of neutral gas by liquids.

(c) Pumping by condensation on cold surfaces.

(d) Ion pumping by burying ions in solids (evaporated or sputtered coatings or bulk material).

(e) Ion pumping by discharging to a forepump (through a barrier or otherwise).

(f) Ion pumping by chemical reaction with liquids.

A full discussion of (a)-(f) is certainly in order; but the limitations of these possibilities are well enough known to allow (f) to be chosen because this method scales up the best.

Considering clean pumping with diffusion pumps, it is surely uncontroversial to state that diffusion pumps can be made clean and that diffusion pumps offer presently the best method for pumping large quantities of thermalized neutral gas for very long periods of time. Clearly then, work should proceed on trap and baffle designs for oil diffusion pumps, especially of large size to be operated in the range 10^{-4} to 10^{-6} mm Hg. To

---

[1] Norman Milleron and Earl C. Popp, Gettering Hydrogen at Ultra-Low Pressures by Evaporated Metal Coatings, UCRL-5258, Dec. 1958.

[2] Norman Milleron, Some Component Designs Permitting Ultra-High Vacuum with Large Oil Diffusion Pumps, UCRL-5259, Dec. 1958.

this end the room-temperature trap developed at Westinghouse Electric Corporation under contract with the AEC is getting immediate attention, as well as economical high-throughput refrigerated traps and baffles.

"Black Hole" Pumping Experiments

In an informal letter given Sherwood vacuum distribution on December 4, 1957, it was suggested (by Milleron) that ions other than noble-gas ions could be captured chemically in liquid metals. Subsequently an ion pump was constructed using a Penning type discharge, in which one cathode consisted of a pool of liquid metal. This device proved to have pumping capability at relatively high pressures (~ 1 μ Hg). A eutectic alloy of Bi, Sn, Pb, and In that melts at ~ 58°C, with vapor pressure thought to be $< 10^{-11}$ mm Hg at this temperature, was used. Results with this liquid were encouraging enough to justify further development. The discharge in a Penning type of ion pump has now been wholly supported on metal vapor derived from evaporation from a tungsten wick and from sputtering of the liquid metal. The results seem to indicate that even the noble-gas ions are pumped under the conditions of this experiment.

The aim of these tests is to provide a method of catching ions in cool liquids and finally degassing these liquids elsewhere. These results with liquids may apply especially to the problem of beam catching.

Clean Pumping with Diffusion Pumps and Traps

Basic research has been in progress for three months toward the design of an oil vapor trap suitable for achieving system pressures in the range of 10^{-9} mm Hg in use on a 32-inch oil diffusion pump. The work has involved three primary considerations:

(a) The trap must have optimum trapping ability (no oil is to be allowed to pass from the diffusion pump into the high-vacuum system) and at the same time must have the maximum practicable conductance for the gas to be evacuated so that maximum pumping speeds can be realized.

(b) The trap must be completely bakeable to 400°C in order to be useful in an ultrahigh-vacuum system.

(c) The trap, once in operation, must be effective as a trap for the longest time possible.

For optimum design requirement in the first consideration, two different types of trap are being considered. The first type uses the principle of condensing oil molecules on a cold surface. The second type uses the technique of adsorption of oil molecules on surfaces at room temperature.

In line with the desire for maximum conductance, several baffle configurations are under test in the laboratory. The object of the baffles is to prevent any room-temperature oil vapor from penetrating the trap without hitting a trapping surface. The trap configuration that may hold the greatest promise for maximum conductance is the right-angle trap. This configuration eliminates the need of baffles since only direct lines of travel which encounter trapping surfaces are available to oil molecules.

The work with all the trap configurations mentioned above is applicable to both liquid nitrogen and other traps. Both types will be bakeable and will give the same conductance for the surface configuration. Only the working materials are different. In sum, the present work on traps is designed to show which trap configuration and which trapping material will offer the best working trap under the desired conditions.

Parallel work is being done on optimizing the technique of preventing backstreaming diffusion-pump oil from impinging directly on the oil-trapping surface. This involves the design and testing of various water-cooled baffles and a water-cooled top jet-cap cover. If the cooled jet-cap cover proves effective in preventing appreciable oil backstreaming, then it may also prove to be the best solution to the problem, since the jet cover affords a minimum reduction in pumping speed.

Complementary Techniques

Gaskets

The "bead" or "bump" copper compression gasket reported in UCRL-5259[2] has now been easily fabricated, at the suggestion of Levenson, by chemical milling with HNO_3. Work on sealing glass windows and glass pipe with bead gaskets is under way. Attention is called to the use of these gaskets with noncircular flanges. Flanges designed for rubber gaskets can in many cases use bead gaskets without any modification.

PIG Pumps

In 1955 a small PIG pump was constructed utilizing a periodic magnetic field produced by ferrite permanent ring magnets. Now a bakable version of this idea is ready for test as a sealed pump for a mass spectrometer.

Motion Seals

Bakable, rotatable seals using molybdenum in contact with liquid metal alloy have previously been reported. As these seals were originally designed, sealing between atmosphere and vacuum was not satisfactory when the shaft was not rotating. A modified design of this seal is expected to seal satisfactorily whether the shaft is rotating or not.

Valves

In order to pump down a vacuum system to pressures in the range of 10^{-9} mm Hg, the whole system, at the present stage of the art, must be bakable. Since valves are almost inevitably included in vacuum systems, it is essential to have bakable valves availabe. Such valves are being considered for use in systems containing 32-in-diameter tubes. A valve of this nature, in order to be of practical use, must have the following attributes: (a) It must be bakable. (b) The valve seal must hold a vacuum of 10^{-9} mm Hg repeatedly through at least 100 openings and closings. (c) The valve must contain no material that outgases appreciably at room temperature.

The easiest way to obtain the necessary closure pressures needed to effect a seal in a valve is to use a hydraulically operated, hollow steel tube of elliptical cross section. The tube can be expanded along the minor axis of its cross section by internal hydraulic pressure. This expansion can be used to force a closure plate against a soft copper ring. A seal can be effected in the copper by a knife edge of raised metal in the form of a circle on the face of the closure plate.

The seal may be broken by returning the hollow tube to its original shape by means of a plate of spring material which was deformed by the expansion of the tube.

The closure plate can be removed from the main opening of the valve by a winch operated through liquid-metal rotary-motion seals of the type described above.

MECHANICAL ENGINEERING DEVELOPMENT

Thomas H. Batzer

Beta-Ray Experiment

Cyclotron machine runs on the fast-fill phase of this experiment were made Nov. 21 through 26, Dec. 17 through 20, and Jan. 12 through 14. The mechanical operation was apparently satisfactory during these runs; however, the following mechanical changes have been made. A new 20-in. plastic valve gate and a stainless steel jacketed aluminum valve rod have been installed to improve the characteristics of the vacuum system. Conductance of the closed valve has been decreased from 0.5 liter per sec to a negligible amount. The anodized aluminum rod was picking up large quantities of gas from the high-pressure end of the valve actuator and releasing it into the vacuum system during valve closure, resulting in a pumpdown time between cycles of from 20 to 30 minutes. The new stainless-steel-jacketed rod has reduced this time to the order of a minute.

The 32-in. stainless steel pumping system has been separately assembled for tests. The refrigeration system for the diffusion pumps (DP) cold cap and cylinders is in operation but not yet optimized. Thermocouples have been installed over the trap and baffle cold surfaces. Completion of the DP boiler insulation should permit suitable boiler operating temperatures. With the DP in operation, pumping-speed and base-pressure measurements will be made. Next, obtaining thermocouple data will aid in evaluation of the trap and baffle design.

Liquid Helium Pumping Experiment

The liquid helium pumping experiment has been beset with many difficulties, all of which are being overcome at the expense of time. The first-stage liquid nitrogen system has been down to 2×10^{-10} mm Hg and through bakeout several times, but each time trouble has developed. In one case an electrical lead-through developed a leak; in another, a pinch gasket

failed; and in a third, a faulty flange was discovered. The flange, after having gone through several bakeouts, proved to have had holes drilled through the gasket land which were carefully plugged by the vendor without informing us. After several bakeouts these holes tend to open up and cause leaks. A new flange was fabricated and installed in the liquid nitrogen trap assembly for bakeout.

In order to avoid the resultant mess of having the system go up to air for any reason and deposit oil throughout the trap, pressure triggered, solenoid operated, valves interlocked to the DP heater are being installed in the fore vac line and between the DP and the water baffle.

Source-Test Vacuum System (Fasolo)

Design of the source-test vacuum system has been completed. The vacuum-system components are being fabricated by the Allied Engineering Co. of Alameda. An apparatus to check the performance of the two MCF 140 10-in. oil diffusion pumps scheduled for use on this vacuum system is nearing completion in Bldg. 124.

The vacuum system is designed to handle a Von Ardenne source. The throughput is expected to be approximately 1 amp of deuterium gas, which the system will handle at about 3×10^{-5} mm Hg.

Beam Catcher (Hester - Lauer)

A device for stopping and burying a 3-in-diameter collimated 100-ma proton beam (100-kev injector) is under consideration. The necessary detail test data for support of the design we hope to obtain from a bulk-evaporator test being set up in the High-Vacuum Laboratory. The final catcher design envisions the collimated beam losing its energy to a water-cooled copper target. A direct stream of evaporated metal would then mechanically bury the resultant neutral gas in the target.

Big-Pinch Torus Design Study

The report on the engineering study is about 2/3 complete in the rough-draft stage. The completion date is questionable because of the low priority of this project. The only mechanical hardward resulting from this study was a joint-test fixture to determine the feasibility of using inflatable vacuum seals to take up differential expansion between segments of the torus due to heating. As time permits these seals will be investigate..

One-Inch Pinch

A large-diameter insulator ring was successfully made by firing a zirconia-base fused enamel on a low-carbon steel ring to a thickness of about 25 mils. A dielectric strength of 1000 volts per mil was obtained. This ring was used successfully in the One-Inch Pinch experiment. The dimensions of the ring were roughly 48-in. i.d. by 52-in. o.d. and about 1-in. long.

Sodium Pinch

In the sodium pinch experiment, sodium metal is substituted for the gaseous conductor normally used in the pinches. It was desired to cast a cylinder of sodium within the pinch tube. Several methods of centrifugal casting were tried. The pinch-tube cylinder was put in a lathe and spun at very high speed with heat lamps directed on it to melt the sodium. Between the sodium and the wall of the cylinder were placed various materials to prevent sticking and provide the proper gap. The first among these was Dowtherm A, which is slightly more dense than sodium. However, because of the local freezing of the sodium on cooling, with the attendant density change, the sodium surface was very irregular. Several other methods and materials were tried, such as casting directly on a charred epon cylinder to reduce adhesion and using colloidal graphite painted directly on the epon cylinder. None of these methods worked satisfactorily. At this point it was decided to try casting a sodium cylinder inside a 1-mil sheet of aluminum foil within the main cylinder and not attempt to remove the aluminum, since its strength was negligible in a 100-kilogauss field. This was tried successfully and the method was employed in the sodium pinch experiment.

In order to reach the necessary stabilizing Z-field strength in the sodium pinch experiment with the available power supply it was necessary to cool the coil to liquid nitrogen temperature.

One-by-Four-Foot Torus

A 1 × 4-ft torus being fabricated by Coors Porcelain Co. entirely of alumina is nearly complete. The segments are to be solder-glassed together to form two 180° sections which will be shipped.

Hard-Core Pinch

A toroidal hard-core pinch is being designed. The dimensions are 12 by 48 in. with a 4-in.-diameter by 48-in. major diameter levitated core. Studies have yielded an understanding of strength, heating and cooling, and general arrangement. Some detail working plans have been completed. The general arrangement is that of a copper hard core within a corrugated stainless steel inner liner which is to be baked out by induction at 400° C. Both are within an external, unbaked, differentially pumped shell.

Toy Top

The new source test stand installed in the room west of the main Toy Top area is now in operation. It is comprised of 20 feet of 18-in.-diameter glass evacuated by two 10-in. mercury diffusion pumps and surrounded by a flat solenoidal field. The source is at one end and the analyzer is at the other.

A new liquid nitrogen baffle designed for the 10-in. pumping system on the Toy Top source testing machine is being fabricated. The trap has increased conductance and is sealed against pumping-fluid migration along warm walls. It is hoped that this trap will decrease the base pressure as well as increase the pumping speed of the system.

A new magnetic analyzer is being designed. The field will be supplied by an external magnet capable of producing 4000 gauss in 1-1/2-in. gap. The pole pieces will have an area of 72 in^2 and will be of the 180° deflection type accommodating particle radii of from 1/2 to 5 in. The analyzer chamber itself, the collimating slits, and the collector assemblies are in the design stage and probably will be thus for three or four weeks. It is hoped that this analyzer will provide much better resolution due to the self-focusing action of 180° deflection. Also, the magnet will be adjustable in position, which should allow the focal point to be brought coincident with the collector.

Variable-Energy Electron Beam Apparatus

This apparatus was designed and is being fabricated to calibrate fluors. The principal components will be a glass vacuum system suitable for approximately a $100^\circ C$ bakeout and pressures of approximately 5×10^{-5} mm Hg, an adjustable mounting for a Huggins electron gun, one or more deflecting magnets, and a stack of accelerating discs and ceramic insulators capable of holding up to 50 kilovolts. There will be flex-hose connections to the vacuum system, a Faraday cup detector, and sliding seal mounting on a 2-in.-diameter sample-holding tube for irradiation by the electron beam.

Cryogenic Magnet

In January 1959, Richard Post presented the results of his study showing the feasibility of a fusion reactor using high magnetic field and low-temperature magnets (less than 20° Kelvin). This rather large development project is being started immediately with some preliminary engineering experiments on copper and sodium magnets and a detail study of possible low-temperature facilities.

Some preliminary work is in progress on the operation of conventional coils at low temperatures. One example is a 50,000-gauss median-field mirror arrangement with a ratio of 1.5:1 for the Felix experiments. Several large general-purpose coils are available, and a study was made of the methods by which these coils could be adapted to this purpose. Liquid nitrogen cooling will be required to limit the coil power to reasonable figures regardless of the final choice of coils.

It appears that the existing coils are not well proportioned or well matched to existing power supplies even when used in tandem pairs to form each mirror. A coil is now being designed specifically for this purpose. The first cooling tests will be made on a standard 9-in. modular magnet coil. Basic heat-transfer data are being sought to complete the coil design for the 50,000-gauss mirror coils.

Milpu

A 4-in. bakable air-operated valve for Milpu has been designed and fabricated. After a number of cycles it continues to show no response to a helium leak detector at 4×10^{-7} mm Hg.

A C. E. C.* mass spectrograph has been converted along the lines laid down by the Westinghouse vacuum group. This instrument is to be used to read the residual gas in Milpu. It is fabricated of hard gaskets with bakable valves and a partially bakable tube envelope. The vacuum system pumping the mass spectrograph uses a hard-gasketed chevron-type liquid nitrogen trap and water baffle on a 4-in. oil diffusion pump.

Design work is under way to convert to copper pinch gaskets throughout Milpu. A 42-in. flange originally designed for pinch-gasket tests on the Astron tank has proven reliable under ambient conditions and is now being baked out at 400° C. So far this test has indicated great ease in applying a copper pinch gasket to very large flanges.

The new Felix grid source developed by Frank Gordon is about 95% detailed and about 50% constructed. This is the source to be developed in conjunction with the neutral-beam experiment on the Felix machine.

dc Test Facility

Assembly of this apparatus is well along in the north pit of Bldg. 157. The electron gun is being assembled in place. The 12-ft-long 6-in. flexible hoses for the roughing and holding lines of the electron gun have been installed and leak-hunted. These flexible lines are necessary because of the wide range of adjustment built into the electron gun. Preliminary testing of the spark gaps and pulse lines is now in progress.

Astron TWL

Removal of all A-48 equipment has been completed and installation of the Astron platform on which the 5-ft traveling-wave line test apparatus will be assembled is under way. The design work on the 5-ft TWL test is virtually complete with some of the major components on order. A decision to provide for differential pumping on the 5-ft TWL vacuum vessel made some design changes necessary. The major components required for this change have been detailed and are now on order.

The vacuum manifold for the main pumping system for the TWL has been delivered and checked vacuumtight. Other components required, such as the main tank and end tank, are now under construction by the Berkeley Steel Construction Co. with a delivery date of March 15 expected.

Design of trucks, ports, and handling equipment for the above apparatus is about 75% complete. Vacuum piping is now being designed.

A test assembly for checking large-diameter 40-in. copper pinch gaskets has been built and assembled. Using gaskets cut from sheet copper, it is possible to get a vacuumtight joint that will pump down to 3×10^{-7} mm Hg without baking. Further testing will include thermocycling to check application to bakable systems.

---

*Consolidated Electrodynamics Corporation.

One-Foot TWL Mechanical Test

The full-diameter 1-ft TWL test section was assembled successfully. One hundred alumina bushings complete with vacuumtight stainless steel caps and leads were pressed into the outer aluminum shell. Each bushing was preceded by a combination broach-and-ball-sizing tool which left a smooth hole approximately 0.0007 in. undersize. A force of 2500 to 4500 lb was required to press-fit the ceramic bushings. Three holes out of 100 were oversized, and these were resized and fitted with special spare bushings of 10-mil-oversized diameters.

On the inner shell, 84 alumina bushings complete with vacuumtight copper and stainless steel caps and leads were press-fitted into the inner aluminum shell by the same technique described above. Five holes which were badly damaged during fabrication were resized by squeezing the metal around the holes to reduce the id. Each of the shells was fitted with four 1/4-in. copper tubing coils, five turns each. The assembly was fitted with ion gages in the annular space and pumped down by a 6-in. oil diffusion pump and leak-checked. One bad leak and five lesser leaks were found between the shell and the alumina insulators. These leaks were sealed with glyptal and the system pumped down to 3×10^{-6} mm Hg at the untrapped gage and 3×10^{-7} mm Hg at the liquid-nitrogen-trapped gage. Most of the leaks were at holes that were severely out of tolerance before assembly. There are 184 lead-throughs in the assembly.

The line without the capacitors was checked for voltage breakdown and found to be good up to 12 to 17 kilovolts. Within this voltage range there was occasional arcing, usually on the air side of the lead-throughs. Capacitors will be added and wave forms will be checked and studied.

It appeared from the assembly test on this 1-ft TWL that the 5-ft TWL is feasible from the point of view of fabrication, assembly, and vacuumtightness.

Astron Electron Accelerator

A preliminary design study has been made on a 3-Mev 200-amp electron accelerator, giving sixty 2-μsec pulses per second. Both the induction principle and the more conventional high-voltage generating techniques are being considered. A detailed study and cost estimate was made on a more modest 1/2-Mev, 0.5-μsec-pulse-length induction machine, which may be built first to test the various principles involved.

The thermal conductivity of a laminated iron transformer core was measured in a direction normal to the laminations and the experiment described in engineering note ENA-85, 4513-41, by Clyde Taylor. A small apparatus was built to make this measurement, using the principle of transient heat conduction. For 2-mil-thick laminations the thermal conductivity was found to be 0.5. BTU/hr/$^{\circ}$F/ft, which is only about 2% of the thermal conductivity of solid transformer iron. These data are necessary for studying methods of cooling both the large cores of any induction accelerator and the cores of the present Astron electron gun.

Low-Temperature Refrigeration

A three-stage -220° F cascade refrigeration system is being developed for cooling baffles on vacuum systems. Efficient oil-separation systems are being developed to prevent compressor oil from circulating with the refrigerant through the low-temperature stage and plugging the lines. A vortex-type centrifugal separator has been built as well as several types of filtration separators and a diverter-type separator to prevent oil migration along pipe walls, and starting procedures have been developed to minimize oil foaming on startup.

About 250 hours of continuous operation without plugging has been obtained with a Freon-22–Freon-13–Freon-14 system. The system was then converted to Freon-22–ethylene–methane, and has been operated for more than 30 days with no difficulty. A new set of heat exchangers has been developed and is being installed in a new system utilizing the same compressors, to actually refrigerate a 20-in. DP baffle.

A vane-type vacuum pump has been purchased and is being tested for refrigeration service. If successful, this pump will make the system much smaller and more efficient and will reduce the cost.

A high-performance vacuum-insulated line for piping cold refrigerant between baffles and refrigeration unit was developed and is being built. Several types of insulating methods were tested in a 3-ft-long section.

A proposal from Harris Refrigeration Co., Cambridge, Mass., to provide a complete refrigeration system was requested and has been received; more data will be obtained from Harris before a decision is made.

Fast Mechanical Switch

Satisfactory tests have been completed with low-voltage Perkin-Elmer dc power supply and plans are under way to test the switch on the Table Top II capacitor bank. A combination of copper-tungsten contact buttons working against a silver-plated chrome-copper switch blade has operated 2400 times with a current of 18,000 amp and pulse duration of 40 msec. There has been no evidence of electrical wear and only a slight amount of mechanical wear; the latter occurred during initial operation and has not progressed with continual running. The maximum current available from the two Perkin-Elmer power supplies is about 18,000 amp, therefore tests at higher currents will require the use of a capacitor bank. Electronics Engineering is making arrangements to use the Table Top bank and coils and contemplates using currents up to 50,000 amp initially.

The mechanical parts of the switch have completed 14,000 cycles of operation without mishap, therefore the initial specifications of a 10,000-cycle life have been met so far as these parts are concerned. It is noted that the Table Top bank has been pulsed about 40,000 times in 4 years; 10,000 cycles therefore represents a year's service. A schedule of semi-annual preventive maintenence on such a switch should be adopted rather than waiting for failures to occur. This would include disassembly and replacement of moving O-ring seals as a routine precaution.

Consultation with Mr. Frank Emley, Westinghouse Electric Corp., Pittsburgh, Pa., confirmed the direction of our experiments with contact materials. (Mr. Emley is considered to be expert in the field of contact materials.) He said that the contacts that we have successfully used at 18,000 amp may handle more than 100,000 amp as well; he also recommended commercially available materials which might be expected to perform somewhat better on this service. These will be procured for tests.

A suitable electronic trigger has been tested which will fire the capacitor bank at a fixed time interval before the crowbar contacts close. It is expected that the mechanical crowbar switch will close 300 μsec after the crowbar tubes.

Report Issued

C. E. Taylor and J. F. Steinhaus, High-Flux Boiling Heat Transfer from a Flat Plate, UCRL-5414, Nov. 1958 essentially completes this engineering research project and presents all the pertinent data, including high-speed photographs of the boiling phenomena.

Liquid Nitrogen Boiling Experiments

A small experiment was conceived, designed and completed to study the boiling phenomena associated with liquid nitrogen cooled baffles. Half inch diameter by thirty four inch long stainless steel tube was heated by passing a current through it. The inside of the tube was flooded with liquid nitrogen at atmospheric pressure, the wall temperature of the tube is a function of heat flux obtained for various angles of tube inclination from horizontal to vertical. Some rather high temperatures were discovered for low inclination angles. The results of this experiment will soon be summarized in a report by C. E. Taylor.

Whirling Dervish

This experiment is being performed to gain data on the flow characteristics of liquid metals in magnetic fields. It consists of a torus containing liquid metal set up to rotate in a nonuniform magnetic field with provisions to carefully measure torque. The results of this experiment will appear in the portion of the Astron power study being written by Bill Wells.

ELECTRONIC ENGINEERING DEVELOPMENT

Vernon L. Smith

Pyrotron

Table Top II

Stanford Research Institute consulting physicists have been conducting low-level tests utilizing the capacitor bank of this machine. General Engineering support has been provided to design the following items:

a. A switch to provide a 3-kv 10-msec pulse to SRI's plasma instrument.
b. A device to supply 10 kv to the SRI analyzer standoff ring and short it out for 200 μsec at a precise time.
c. Engineering support on the design for a 50-kv 1-ma electron gun. Several power supplies and pulse chassis are under construction or nearly completed.

Toy Top II ϕB

Capacitor Bank #3 was modified considerably to accomplish the following:

a. Total energy was increased.
b. Ignitrons were added in series to increase operating voltage level to 20 kv.
c. The bank was split into two sections.

All the above changes necessitated considerable modification of control racks, interlocking, pulse, and timing circuits.

A nine-channel 0- to 15-kv source trigger system has been completed and checked by firing into dummy loads.

An engineering review of a 24-channel data-reduction system has been completed. Objective is to measure the integrated value of 24 pulses on 24 separate channels with a total read out time of about 8 to 10 seconds. Pulses are 10 to 100 μsec in duration, 5 mv to 1.5 volts. The output is to be in digital form printed on paper.

A system has been purchased from Non-Linear Systems, Inc.

P-4

An arc-current-limiting circuit utilizing 80 1-kw tungsten lamps was built. This circuit is being used with the 300-kw dc power supplies.

Equipment for an instabilities-excitation experiment is being assembled. All necessary power supplies, filament supplies, etc. have been located. The electron gun will not be out of the shops until mid-April. Therefore, construction of the shielded control area will be delayed until the end of March.

Felix

A mass spectrograph system for vacuum analysis was completed. It was modified for E field sweep scanning. Felix machine is being supported

only for D.C. tests. Equipment and system installed for D.C. operation of a Von Ardenne source in the Felix Vacuum Tank.

Joint studies with the Mechanical Engineering Group have begun on the idea of operating magnetic field coils at liquid nitrogen temperatures.

Guppy III

A satellite oscillator was built in order to double the RF output. The rating is 10 kw.

100-Mev Injector

A "searchlight" magnet was added in order to provide additional beam focusing.

Pinch and Collapse

Gamma Bank Area

Unique resistor-type fuses were developed which will be installed in the charging circuit of each capacitor.

The linear hard-core pinch experiment is now in progress.

The Gamma Bank is now completed except for minor modifications.

300-kv Marx Generator

The bank has been completely disassembled and one string has been installed for test and development.

Tests indicate that the quartz windows used for light communication between gaps become coated after about ten operations. This effect degrades the firing jitter seriously. Consequently, effort has been directed towards interconnection of gaps with hollow tubes of insulating material sealed together to permit evacuation of the gaps. The bank will be gradually reassemble using this scheme if it is successful.

Astron

dc Test

Considerable effort has been devoted to assembling equipment for the dc test utilizing the 600-kv electron gun developed at Berkeley.

The following items have been completely checked out:

a. 66-kw 200-volt dc power supply, constant current, ± 0.1%.
b. 40-kv power supply for pulse-line charging at 60 pulses per second.
c. Spiral-groove current power supplies. The "A" and "B" pulse coil power supplies are still in the design and development stage.

Astron Machine

The traveling-wave-line 1-ft mock up has been tested for time delay (30 cm/μsec), rise time (nearly 2 μsec for one foot length), amplitude vs. frequency, and phase shift vs. frequency.

The latter two curves agree with the pulse data for one foot length but do not agree at the 1/2 foot length.

We are attempting to take data and analyze it so that the characteristics can be predicted for a 5 foot and 15 foot TWL.

The present data indicates that the rise time for a 5 foot section might be nearly 10 μsecs. However, this conclusion has not been proven as yet.

Switch Development

Mechanical Switching

A fast mechanical switch has been built and tested satisfactorily at low voltage and high current.

Preparations are being made to test it on Toy Top up to 54,000 amp.

The 40-kv 20-ka rolling-contact switch from Stanford Research Institute has been received. Preparations are being made to test it on the low-voltage power supplies.

Replies to our inquiry concerning explosive switches have been obtained from DuPont and Olin-Matthieson Chemical Corp. expressing interest and encouraging technical information. High-speed photographs have shown the metal to move at a velocity of 100 to 200 meters/sec. Assuming a spacing of 1 cm to hold 40 kv under air pressure, the total closure time of the contact would be 50 to 100 μsec.

If the contacts can be closed fast enough (prior to high-current build-up) it is felt that such a switch has importance in 1-to-2-msec applications.

Ignitron Development

The engineering test bank has been modified for use at 20 kv instead of 10 kv.

All tests of the large-diameter (WX-3668) ignitron have been completed by Westinghouse. Results indicate low inductance and jitter time, as had been hoped. High-current tests were not made.

Negotiations for a Research and Development contract on ignitron-tube development has begun. A complete proposal has been received from General Electric.

Major Negotiations

Ignitrons

Negotiations with General Electric and Westinghouse for a Research and Development contract per our Preliminary Specification L-1310A, Advanced Ignitron-Development Contract, are nearing completion.

We have received one complete proposal from General Electric. The proposal calls for experimental and theoretical work, materials study, design studies, and test samples. Main objectives: to advance the state of the art and to produce higher-current and higher-voltage ignitrons. Reliability is also of extreme importance.

EPS-138, Unipolar Generator

Allis-Chalmers has been selected as the successful bidder to manufacture a Unipolar Generator-cost: $55,590. The requisition has gone to the AEC for final approval. Engineering studies and preparations for receipt of the generator are under way.

dc Power Supplies

The second order for 5- to-300-kw 150-volt dc, power supplies was given to Perkins Engineering Corp.

Data-Handling System

A data-handling system capable of handling 24 input channels at a print out rate of two channels per second was ordered from Non-Linear Systems, Inc. Cost: $8850. Delivery in 60-to-70 days.

TALKS AND PUBLICATIONS OF UCLRL SHERWOOD GROUP SINCE THE GENEVA CONFERENCE

11th Annual Gaseous Electronics Conference, New York, N. Y., Oct. 22-25, 1958:

D. Birdsall, S. A. Colgate, H. P. Furth, and M. Birnbaum, Dynamic Pinch Measurements (UCRL-5324-T Abstract, Sept. 1958).
F. H. Coensgen, W. F. Cummins, and A. E. Sherman, Multistage Magnetic Compression of Highly Ionized Gas (UCRL-5326 Abstract, Sept. 1958).
Oscar Anderson, William R. Baker, John Ise, Jr., Wulf B. Kunkel, Robert V. Pyle, and John M. Stone, The Tubular Pinch ("Triax") (UCRL-8395 Abstract, July 1958).
R. F. Post. Invited paper.

Symposium on Vacuum Technology, American Vacuum Society, San Francisco, Calif., Oct. 22-24, 1958:

Norman Milleron and Earl C. Popp, Gettering Hydrogen at Ultra-Low Pressures by Evaporated Metal Coatings (UCRL-5258 Abstract, June 1958, and UCRL-5258, Nov. 1958).
Norman Millerson, Some Component Designs Permitting Ultra-High Vacuum with Large Oil Diffusion Pumps (UCRL-5259, Dec. 1958).

Second All-Union Conference on Gaseous Electronics, Moscow, U.S.S.R., Oct. 1958:

Lewi Tonks, Self-Consistent Field of Single-Type Electrons in a Uniform Vacuum Magnetic Field (UCRL-5335, Sept. 1958).

Seminar on Advanced Energy Sources and Conversion Techniques (Sponsored by the DOD and UC), Pasadena, Calif., November 1958:

S. A. Colgate, Thermonuclear Devices (UCRL-5366-T Abstract, Oct. 1958).

Meeting of the American Society of Mechanical Engineers, New York, N. Y., Dec. 2, 1958:

C. C. Damm, Thermonuclear Experiments at UCRL (UCRL-5374 Abstract, Oct. 1958).

American Physical Society Winter Meeting, Los Angeles, Calif., Dec. 29-31, 1958:

R. F. Post, High-Temperature Plasma Research with the Mirror Machine, Invited paper.
F. Coensgen, W. F. Cummins, and A. E. Sherman, An Energetic Plasma Source (UCRL-5327 (Rev.) Abstract, Oct. 1958).
G. Gibson and E. J. Lauer, Containment Time of One-Half-Mev Positrons in a Magnetic-Mirror Machine (UCRL-5370 Abstract, Oct. 1958).

UNCLASSIFIED

C[redacted]Y

American Physical Society Annual Meeting, New York, N. Y., Jan. 28-31, 1959:

Edward Teller, Review of Project Sherwood, Invited paper.
H. P. Furth, O. A. Anderson, W. R. Baker, A. Bratenahl, W. B. Kunkel, and J. M. Stone, The Containment and Heating of a Rotating Plasma (UCRL-5402-T Abstract, Jan. 1959).
John M. Wilcox, James D. Gow, and Lloyd Smith, Ion Magnetron (UCRL-8541 Abstract, Nov. 1958).

Journal Publications

The Physical Review:

Lewi Tonks, Self-Consistent Field of Single-Type Electrons in a Uniform Vacuum Magnetic Field (to be published).
G. Gibson, W. Lamb, and E. J. Lauer, Injection into Thermonuclear Machines Using Beams of Neutral Deuterium Atoms in the Range from 100 kev to 1 Mev (to be published).

The Physics of Fluids:

O. A. Anderson, H. P. Furth, J. M. Stone, and R. W. Wright, The Inverse Pinch Effect, 1, No. 6, 489 (1958).
Stirling A. Colgate, A Description of a Shock Wave in Free-Particle Hydro-Dynamics with Internal Magnetic Field (to be published).
S. A. Colgate, G. Gibson, and J. Killeen, Boundary-Layer Formation in the Pinch (to be submitted for publication).

Reviews of Modern Physics:

John M. Wilcox, A Review of High-Temperature Rotating Plasma Experiments (to be submitted for publication.)

Journal of Applied Physics:

O. A. Anderson, W. R. Baker, A. Bratenahl, W. B. Kunkel, and H. P. Furth, A Hydromagnetic Capacitor, J. Appl. Phys. 30, 188 (1959).

Review of Scientific Instruments:

S. A. Colgate, Scintillation Counter Efficiency Measurements (to be published).
D. H. Birdsall and H. P. Furth, Pulsed 200-Kilogauss Magnet for Accelerator Experiments (to be submitted for publication).
William R. Baker, High-Voltage, Low-Inductance Switch for Megampere Pulse Currents (to be published).

Information Division
br

C[redacted]ONLY

UNCLASSIFIED

This report was prepared as an account of Government sponsored work. Neither the United States, nor the Commission, nor any person acting on behalf of the Commission:

A. Makes any warranty or representation, expressed or implied, with respect to the accuracy, completeness, or usefulness of the information contained in this report, or that the use of any information, apparatus, method, or process disclosed in this report may not infringe privately owned rights; or

B. Assumes any liabilities with respect to the use of, or for damages resulting from the use of any information, apparatus, method, or process disclosed in this report.

As used in the above, "person acting on behalf of the Commission" includes any employee or contractor of the Commission, or employee of such contractor, to the extent that such employee or contractor of the Commission, or employee of such contractor prepares, disseminates, or provides access to, any information pursuant to his employment or contract with the Commission, or his employment with such contractor.